TABLE OF CONTENTS 2001 BAMBI

SECTION I
A through C

APPLIANCES

Air Conditioner I-1
Furnace I-1
Range I-1
Refrigerator I-1
Water Heater I-1

BODY

End shell, aft I-3
End shell, front I-8
Roof I-9
RS wall I-11
CS wall I-15
Body interior I-19

CHASSIS

Axles I-20
Shocks I-20
Tire & wheel I-20
Power Jacks/stabilizer jack I-20
Step I-20
Rear bumper/hose carrier I-20
Under belly metal I-21
Coupler, hitch I-21
Brakes I-22

2001 BAMBI

SECTION II
D through E

DECALS/EXTERIOR TRIM II-1

DOORS/WINDOWS/AWNING
- Doors II-2
- Windows II-3
- Awning II-3

DRAPES/BLINDS/VALANCES II-4

ELECTRICAL
- 110 volt II-6
- 12 volt II-7
- Exterior lights/reflectors II-8

ENTERTAINMENT
- Radio/antenna II-9

TABLE OF CONTENTS 2001 BAMBI

SECTION III
F through H

FASTENERS
(Common fasteners available locally are not listed)

Rivets III-1

FLOOR COVERING

Carpet III-3
Mats III-3

FURNITURE

Interior doors III-4
Mirrors III-5
Drawers III-5
Rear bedroom III-6
Bath III-7
Galley III-8
Lounge III-10

HARDWARE

Exterior locks/hinges III-11
Interior drawer slides/hinges latches III-16
Bath accessories III-19
Awning hardware III-22
Bunk III-23

2001 BAMBI

SECTION IV
L through Z

LABELS and TAGS IV-1

PLUMBING

- LPG IV-2
- Fresh water IV-3
- Faucets IV-5
- Drain water IV-9
- Toilet IV-12

SAFETY EQUIPMENT IV-14

SEALER/GASKETS/PAINT IV-15

UPHOLSTERY/FOAM/MATTRESS IV-16

VENTS/FANS IV-17

WOOD/LAMINATES/TRIM IV-18

2001 BAMBI

APPLIANCES

195329-143	Air conditioner, 11,000 Dometic
965346	Pan assembly, drain, air conditioner
690323-03	Heat strip, Dometic air conditioner
690323-100	Shroud, exterior, Penquin
690323-05	Air box/return grill
690395	Furnace, Hydroflame, 7916-II, 19 Ft Bambi
690439	Furnace 12,000 BTU, Atwood, 16 Ft Bambi
600193	Hose, 2”, flex heat duct
511228	Thermostat, furnace, off white
690341	Adapter, 4-2 furnace reducer
601224-03	Register, rotaire, black
690396-05	Range/oven, 22” Maytag, 19 Ft Bambi
690396-03	Bi-fold cover
690396-06	Cook top, 3-burner, Magic Chef, 16 Ft Bambi
690393-01	Refrigerator, Dometic, RM2452RH, 19 Ft Bambi
964385-28	Door panel, refrigerator, 19.62 x 30.50
690394	Power ventilator, refrigerator
690440-01	Refrigerator, 3 CU/FT, 2-Way, RH hinge, 16 ft Bambi
690199	Water heater, electronic ignition
690209	Access door, brushed aluminum
690323-35	Roof A/C, Brisk-air, 7100TRU, 16 Ft Bambi option
690323-03	Heat strip, 7100 Brisk-air A/C
203302	A/C drain pan
690323-36	Air distribution box, Polar white
690396-01	Range, 22”, Maytag w/oven, Option 16 Ft Bambi

Notes

2001 BAMBI

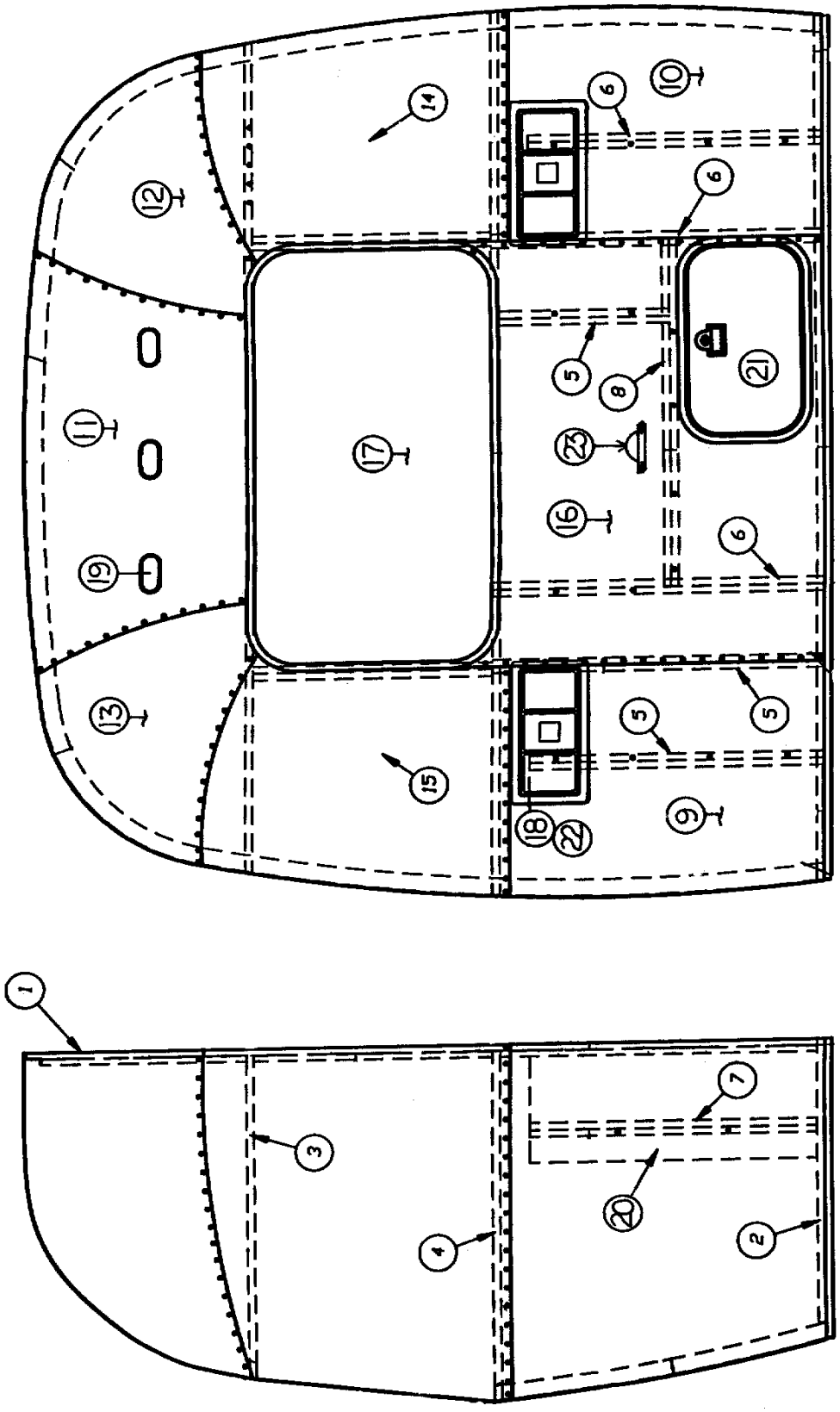

See next page for P/N.

2001 BAMBI

BODY-AFT END

964513 End shell complete, rear, Bambi 19 FT

1) 114371	End bow
2) 104463	Floor bow
3) 104351	Upper window bow
4) 104343	Lower window bow
5) 114505-01	Support, lower end, LH
6) 114505-02	Support, lower end, RH
7) 101315	Brace, vertical rear
8) 104408	Extrusion rib
9) 114895	Segment #29
10) 114894	Segment #28
11) 114892	Segment #25(narrow)
12) 114890	Segment #26
13) 114891	Segment #27
14) 114889	Segment, center right
15) 114888	Segment, center left
16) NPN	Alum. sheet, 050x41x45.25x51.0(cut from 114880)
17) 371362	Window, rear egress, 43.94 x 24.19
18) 500500	Taillight complete
380226	Gasket, taillight lens
510163	3 in. Red reflector
510162	Taillight lens
510161	Lamp, assy., Single filament bulb
510160	Lamp assy., DBL. Filament bulb
201455	Chrome, taillight bezel
19) 510111	Clearance light, red
20) NPN	Alum. Sheet,. 040x12.0x29.0(cut from 114880)
21) 100679-01	Door assembly, access
22) 201462	Pocket, ABS taillight
23) 500053	Light and license plate holder

2001 BAMBI

AFT END BAMBI 16 ft.

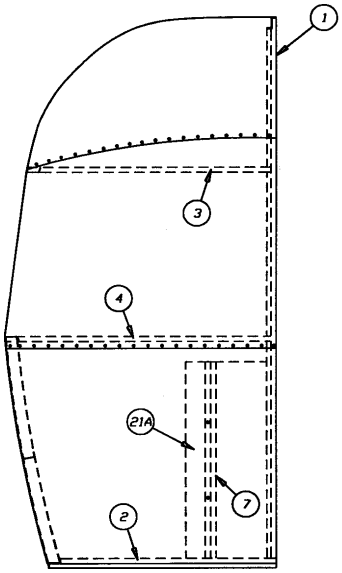

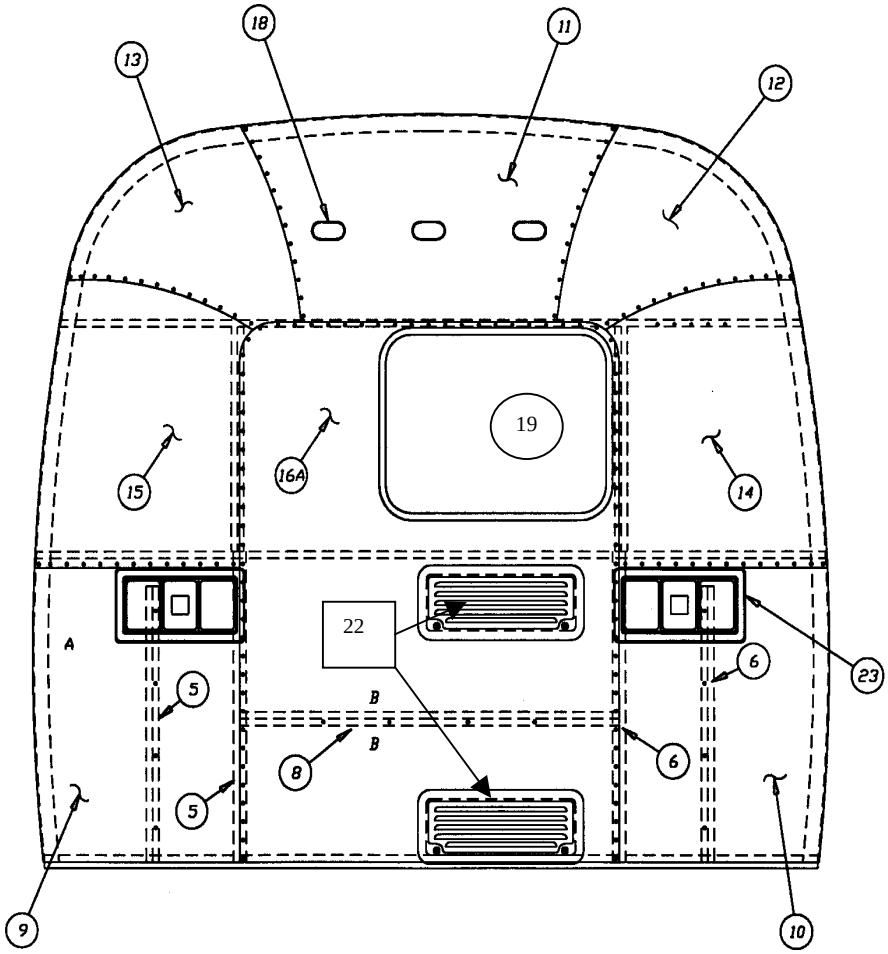

2001 BAMBI

AFT END BAMBI 16 ft

964924 Front end assembly, Bambi 16 FT.

1) 114371	Bow, station “0”
2) 104463	Floor bow
3) 104351	Upper window bow
4) 104343	Lower window bow
5) 114505-01	Support lower end shell, LH
6) 114505-02	Support lower end RH
7) 101315	Brace, vertical, rear
8) 104408	Z-rib
9) 104888	Segment, center left
10) 104889	Segment, center right
11) 114892	# 25 segment (narrow)
12) 114890	Segment, #26
13) 114891	Segment, #27
14) 114894	Segment, #28
15) 114895	Segment, #29
16) NPN	Aluminum sheet, cut from 114360-307
17) 365016	Tape, foam, ½”
18) 510111	Red clearance light, Dbl. Bulb
19) 371362-15	Rear egress window, 26.25 x 19.25”
20) 500053	License plate holder & light (not shown)
21a) NPN	12” x 29”, alum. Sheet for strength, cut from 114488
22) 203305	Refer vent, plastic, Radius corner
23) 500500	Complete taillight assy.
201462	Pocket, ABS taillight
380226	Gasket, taillight lens
510163	3 in. Red reflector
510162	Taillight lens
510161	Lamp, assy., Single filament bulb
510160	Lamp assy., DBL. Filament bulb
201455	Chrome, taillight bezel
Not shown:	
101178	Base, lamp, cast polished RS rear
101177	Base, lamp, cast polished CS rear
500053	License plate light and holder

2001 BAMBI

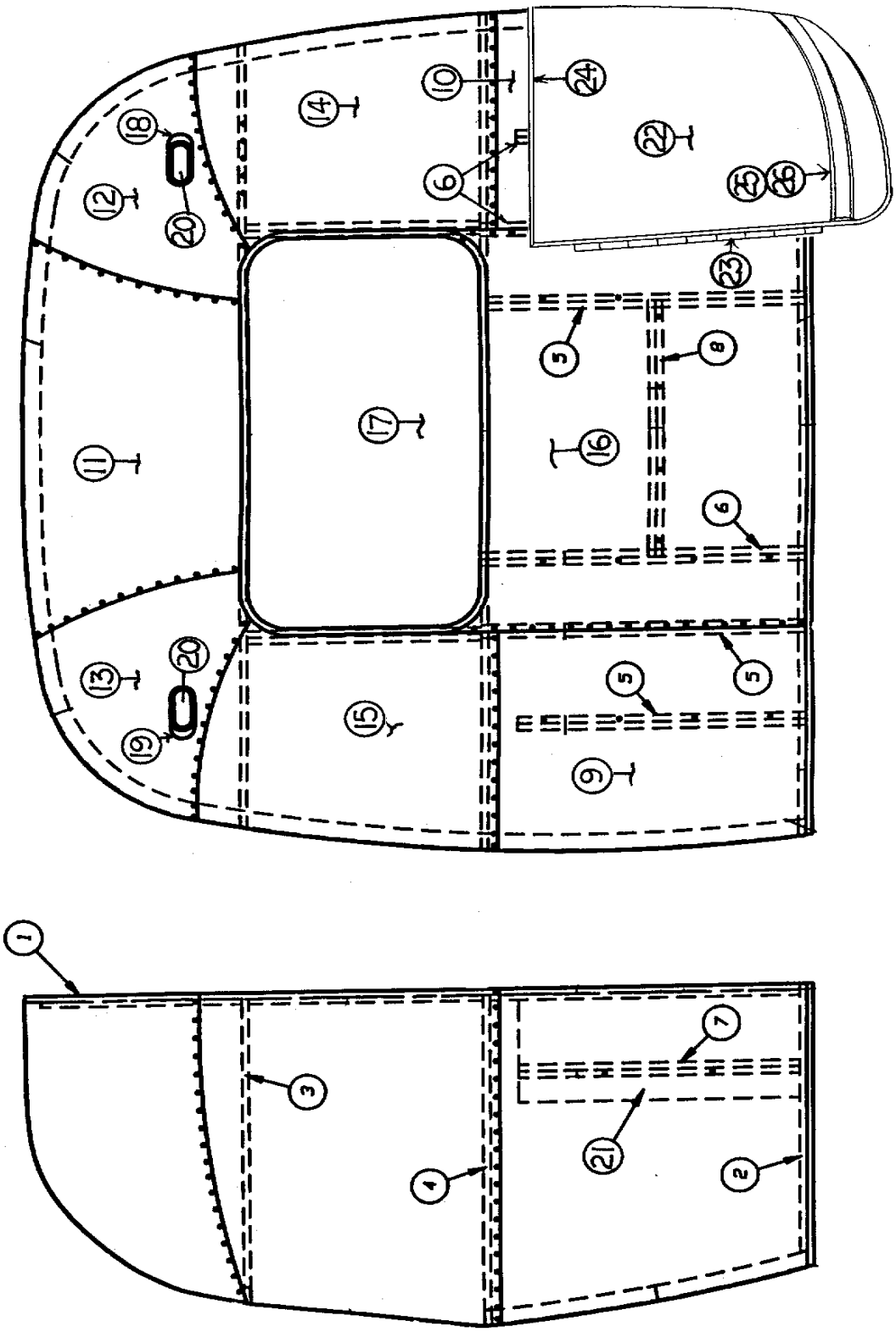

See next page for P/N.

2001 BAMBI

BODY-FRONT END 16 FT & 19 FT

964512 End shell complete, front, Bambi

1) 114371	End bow
2) 104463	Floor bow
3) 104351	Upper window bow
4) 104343	Lower window bow
5) 114505-01	Support, lower end, LH
6) 114505-02	Support, lower end, RH
7) 101315	Brace, vertical rear
8) 104408	Extrusion, Z rib
9) 114895	Segment #29
10) 114894	Segment #28
11) 114892	Segment #25(narrow)
12) 114890	Segment #26
13) 114891	Segment #27
14) 114889	Segment, center right
15) 114888	Segment, center left
16) NPN	Alum.sheet,.060x41.0x45.25(cut from 114849-03)
17) 371362-10	Window,43.94 x 24.19,Bambi
18) 101177	Base , lamp, cast polished, RS
19) 101178	Base, lamp, cast polished, CS
20) 510112	Clearance light, amber
21) NPN	Alum. sheet,.040x12.0x29.0(cut from 114880)
22) 685366-100	Wrap protector, RS, Safari/Bambi
22a) 685365-100	Wrap protector, CS, Safari/Bambi
23) 381605-01	Hinge, stainless, wrap protector
24) 100742-01	Extrusion, mirror/wrap protector trim
25) 114460	Extrusion, rub rail
26) 201763-02	Insert, rub rail, black

Not shown

453629 Hat section-dinette table support, 16 ft Bambi only

2001 BAMBI

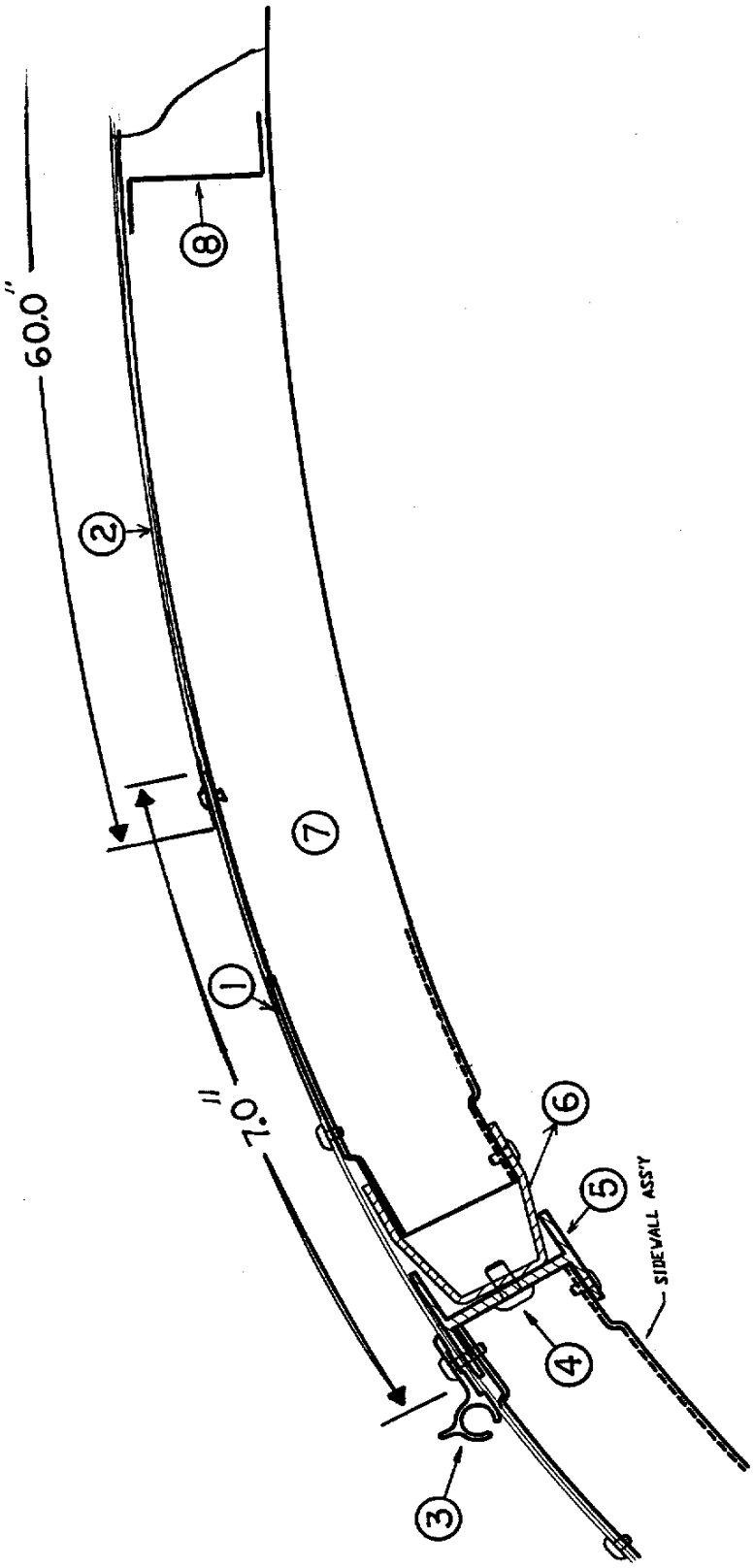

See next page for P/N.

2001 BAMBI

BODY

ROOF-END VIEW

1) 114362-318	Alum. sheet,white,.050 x 7.0 x 318”
2) 114489-259	Alum. sheet,white,.032x60x259”
3) 114290-01	Extrusion, awning/drip rail
4) 340123-02	Rivet, Huck, 3/16 x 1/2”
5) 104707-05	Extrusion, ”I” beam
6) 114987-02	Extrusion, roof corner
7) 114387-03	Roof bow
8) 104408	Extrusion, Z bar, horizontal

2001 BAMBI

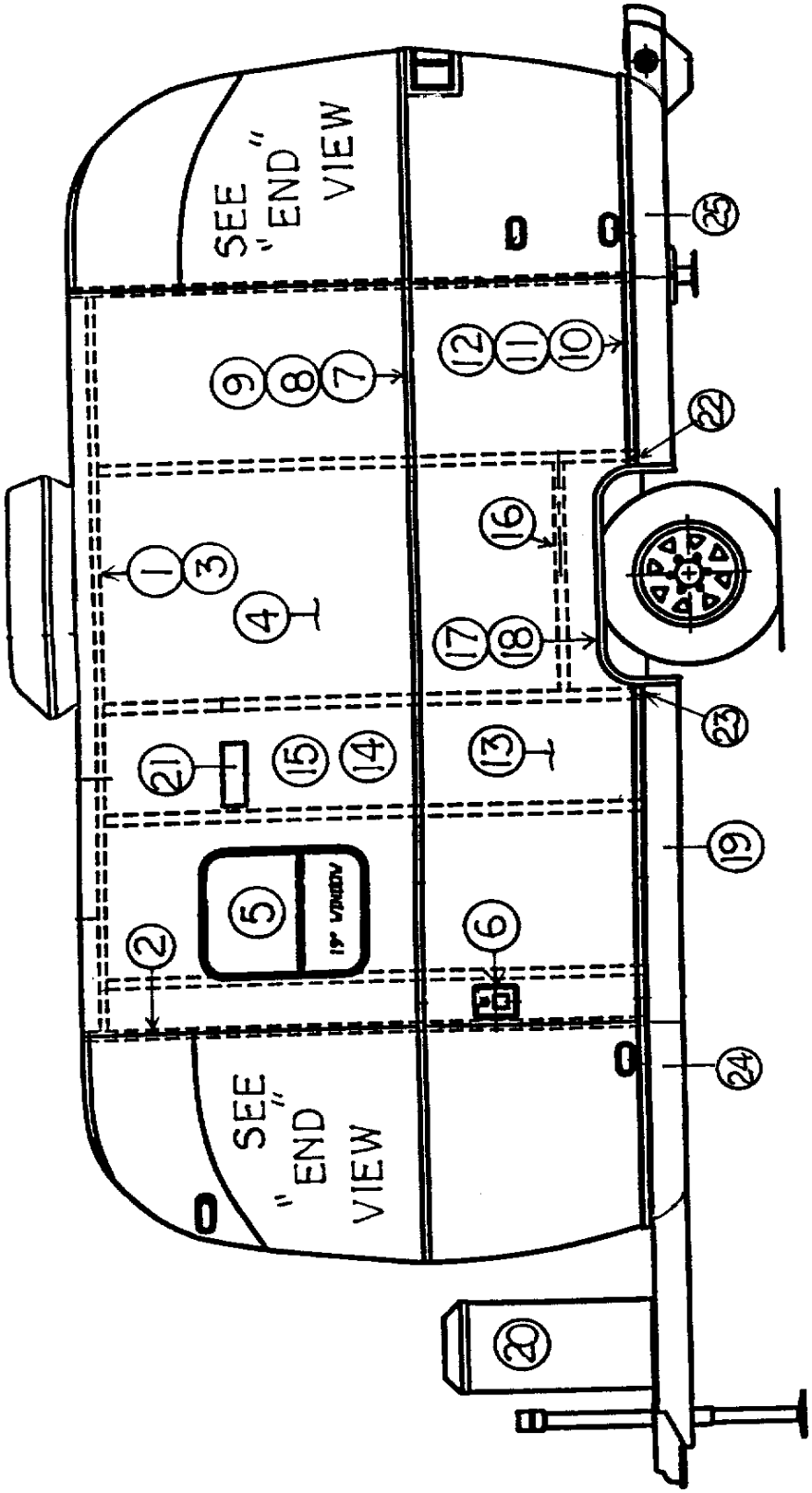

See next page for P/N.

2001 BAMBI

BODY,RS,19FT. BAMBI

(Hardware such as hinges, locks and latches are located in the **hardware** section of this book)

1)114290	Extrusion, awning/drip rail
2)114371	Rib, end bow
3)104707-05	Extrusion, ”I” beam
4)114880	Aluminum sheet,upper,.040 x 51 x 262”
5)371362-02	Window,19.25 x 22.75”
6)601194	Water fill w/lock, gray (381647 CH751 Key only)
7)114328	Extrusion, belt line
8)201912	Molding, chrome, belt line
9)100034	“Z” bar,48”
10)114460	Extrusion, rub rail
11)201763-01	Insert, rub rail,chrome,1”
12)100986	Floor channel
13)114880	Aluminum sheet,lower,.040 x 33 x 262”
14)114387-02	Bow, Z rib, LH
15)114387-02	Bow, Z rib, LH
16)100986	Wheel well stiffener(floor channel)
17)684938	Wheel well trim, inner, single axle
18)684939	Wheel well trim, outer, single axle
19)101131-01	Underbelly wrap,.024 x 22.5,pewter
20)104264	Cover,30# LPG bottles w/o decal
21)511017-11	Vent cover, range exhaust
22)114466-01	Casting, rub rail end, wheel well, RH
23)114466-02	Casting, rub rail end, wheel well, LH
24)203251-01	Banana wrap, RS front
25)203251-03	Banana wrap, RS rear

2001 BAMBI

RS WALL

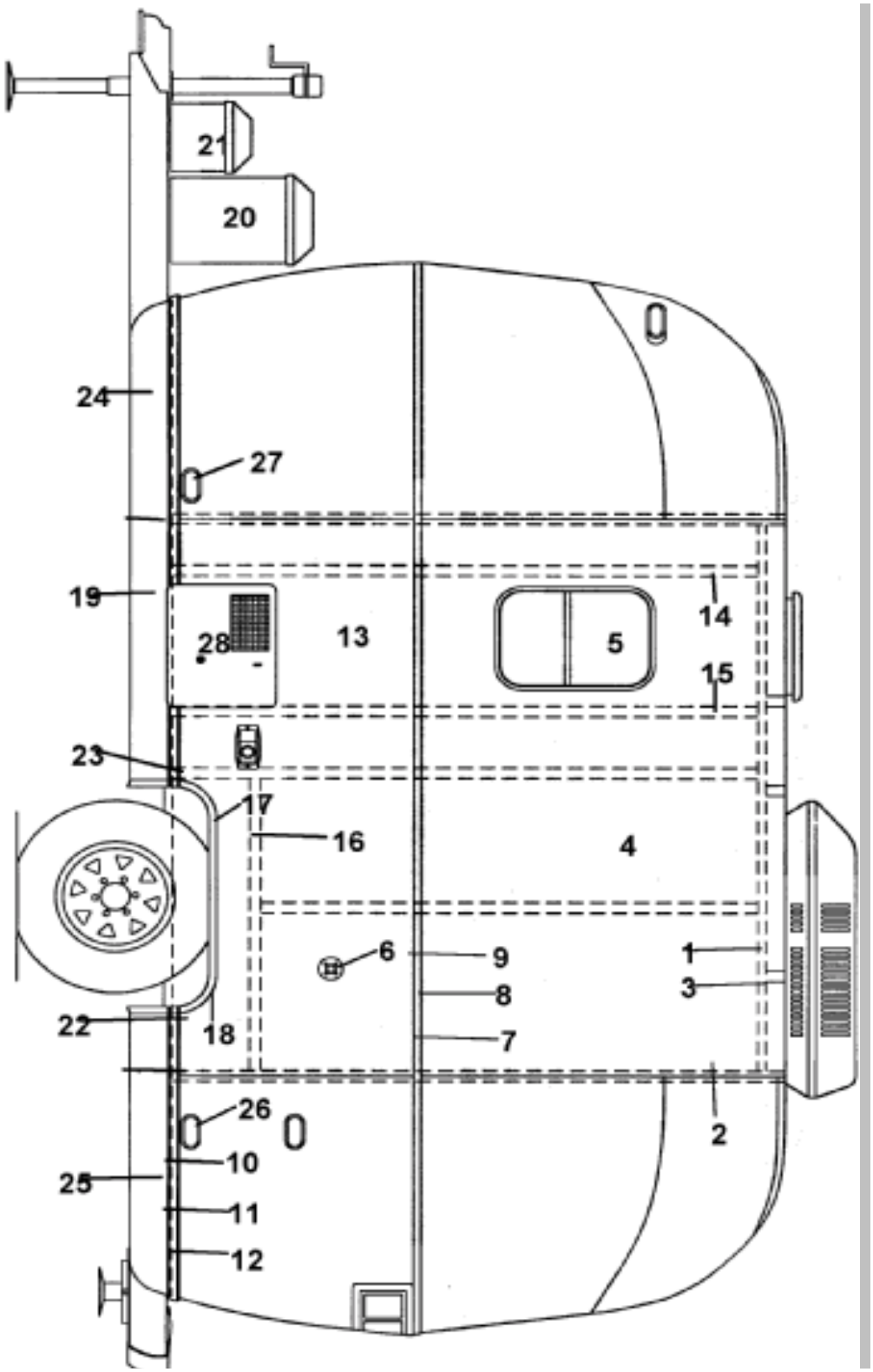

2001 BAMBI

BODY, RS, 16 FT. BAMBI

(Hardware such as hinges, locks and latches are located in the **hardware** section of this book)

1) 114290	Extrusion, awning/drip rail
2) 114371	Rib, end bow
3) 104707-05	Extrusion, ”I” beam
4) 114880-262	Aluminum sheet, upper,.040 x 51 x 262”
5) 371362-02	Window, 19.25 x 22.75”
6) 601392-05	City water hook up, w/regulator, chrome
7) 114328	Extrusion, belt line
8) 201912	Molding, chrome, belt line
9) 100034	“Z” bar, 48”
10) 114460	Extrusion, rub rail
11) 201763-01	Insert, rub rail, chrome, 1”
12) 100986	Floor channel
13) 114879-262	Aluminum sheet, lower, .040 x 33 x 262”
14) 114387-02	Bow, Z rib, LH
15) 114387-01	Bow, Z rib, RH
16) 100986	Wheel well stiffener (floor channel)
17) 684938	Wheel well trim, inner, single axle
18) 684939	Wheel well trim, outer, single axle
19) 101131-01	Underbelly wrap, .024 x 22.5,pewter
20) 104264	Cover, 30# LPG bottles w/o decal
21) 511595	Battery box
22) 114466-01	Casting, rub rail end, wheel well, RH
23) 114466-02	Casting, rub rail end, wheel well, LH
24) 203303-01	Banana wrap, RS front*
25) 203303-02	Banana wrap, RS rear*
26) 500095	Reflector, red, rectangular
27) 500096	Reflector, amber
28) 690259-03	Cover and mounting flange, Atwood

*First units will have painted style 19 Ft Bambi bananas

2001 BAMBI

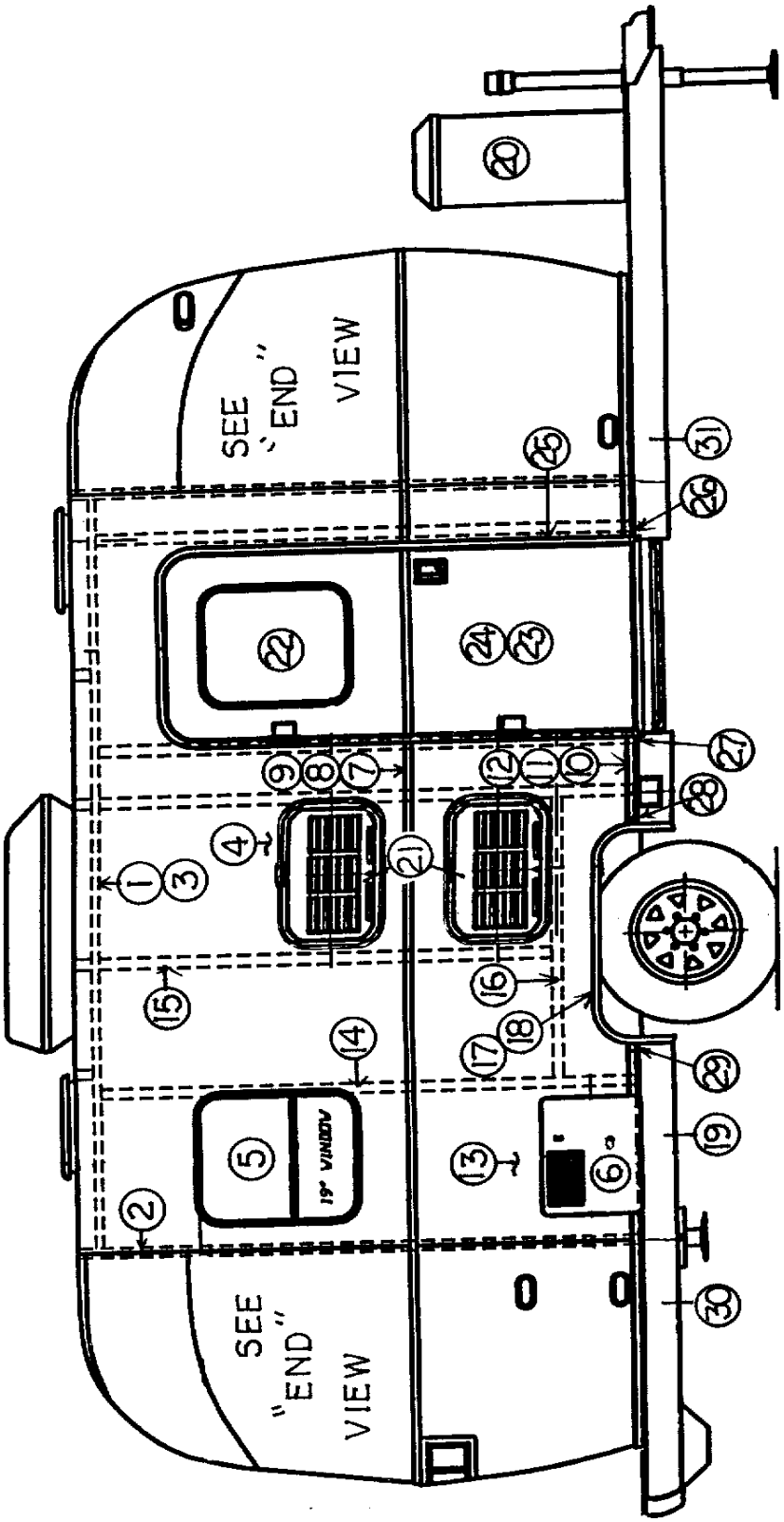

See next page for P/N.

2001 BAMBI

BODY,CS,19FT. BAMBI

(Hardware such as hinges, locks and latches are located in the **hardware** section of this book)

1)114290	Extrusion, awning/drip rail
2)114371	Rib, end bow
3)104707-05	Extrusion, ”I” beam
4)114880	Aluminum sheet,upper,.040 x 51 x 262”
5)371362-02	Window,19.25 x 22.75”
6)690259-03	Cover and mounting flange, Atwood
7)114328	Extrusion, belt line
8)201912	Molding, chrome, belt line
9)100034	“Z” bar,48”
10)114460	Extrusion, rub rail
11)201763-01	Insert, rub rail,chrome,1”
12)100986	Floor channel
13)114879	Aluminum sheet,lower,.040 x 33 x 262”
14)114387-02	Bow, Z rib, LH
15)114387-02	Bow, Z rib, LH
16)100986	Wheel well stiffener(floor channel)
17)684938	Wheel well trim, inner, single axle
18)684939	Wheel well trim, outer, single axle
19)101131-01	Underbelly wrap,.024 x 22.5,pewter
20)104264	Cover,30# LPG bottles w/o decal
21)922243	Door assembly, refrigerator assess
22)371362-01	Window, main door
23)110067-01	Main door assembly
24)114654	Screen door assembly
25)114652	Jamb, main door, pre-formed
26)114465-01	Casting, rub rail end, door, RH
27)114465-02	Casting, rub rail end, door, LH
28)114466-01	Casting, rub rail end, wheel well, RH
29)114466-02	Casting, rub rail end, wheel well, LH
30)203251-04	Banana wrap, CS rear
31)203251-02	Banana wrap, CS front

2001 BAMBI

CS Wall, 16 ft Bambi

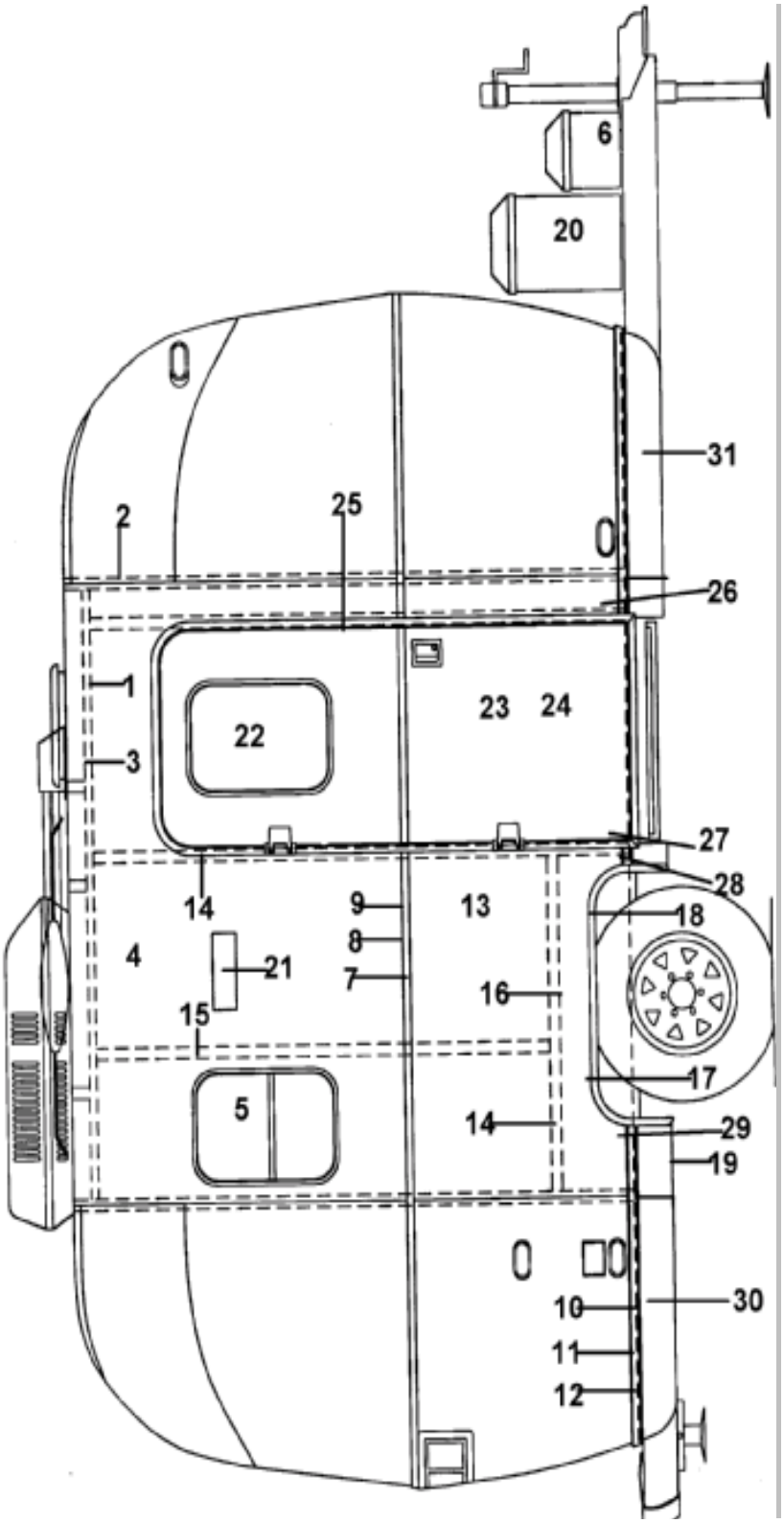

2001 BAMBI

BODY, CS, 16 FT. BAMBI

(Hardware such as hinges, locks and latches are located in the **hardware** section of this book)

1) 114290	Extrusion, awning/drip rail
2) 114371	Rib, end bow
3) 104707-05	Extrusion, ”I” beam
4) 114880	Aluminum sheet, upper, .040 x 51 x 262”
5) 371362-02	Window, 19.25 x 22.75”
6) 511595	Battery box
7) 114328	Extrusion, belt line
8) 201912	Molding, chrome, belt line
9) 100034	“Z” bar, 48”
10) 114460	Extrusion, rub rail
11) 201763-01	Insert, rub rail, chrome,1”
12) 100986	Floor channel
13) 114879	Aluminum sheet, lower,.040 x 33 x 262”
14) 114387-02	Bow, Z rib, LH
15) 114387-02	Bow, Z rib, LH
16) 100986	Wheel well stiffener (floor channel)
17) 684938	Wheel well trim, inner, single axle
18) 684939	Wheel well trim, outer, single axle
19) 101131-01	Underbelly wrap,.024 x 22.5,pewter
20) 703127	Cover, 30# LPG bottles
21) 511017-11	Vent cover, range exhaust
22) 371362-01	Window, main door
23) 110067-01	Main door assembly
24) 114654	Screen door assembly
25) 114652	Jamb, main door, pre-formed
26) 114465-01	Casting, rub rail end, door, RH
27) 114465-02	Casting, rub rail end, door, LH
28) 114466-01	Casting, rub rail end, wheel well, RH
29) 114466-02	Casting, rub rail end, wheel well, LH
30) 203303-01	Banana wrap, CS rear*
31) 203303-02	Banana wrap, CS front*

*First units will have painted style 19 Ft Bambi bananas

2001 BAMBI

BODY

INTERIOR

964480-01	Roof locker & aft end liner
964479-01	Roof locker & forward end liner
114445	Aluminum sheet,.032 x 34” x coil
114853-01	Aluminum sheet,.032 x 57” x coil
702481-01	* Wall liner, Geometric Pearl,96”
702481	* Wall liner, Geometric Pearl Cream
114157-01	Extrusion, end liner, upper, white
201728-01	Extrusion, ceiling trim retainer
201728-03	Extrusion, ceiling trim
203225	Trim, flexible, ”U”, white
203138-03	Extrusion, plastic, wall, beige
203138-02	Extrusion, plastic, wall, brown
114655	Trim ring, formed main door
110460-01	Trim ring, window, 17.75” X 21.25”
110460-02	Trim ring, window, 19.25” x 22.75”
110460-08	Trim ring, window, 44.0” x 24.19”
110521-01	Trim ring, window, rear egress, 43.94”x24.19” 16 FT Bambi
115036	Interior vinyl clad, .032 x 47.5, 16 ft Bambi
115035-02	Aluminum vinyl clad, .040 x 155”, 16 ft Bambi
115035-01	Aluminum, .040 x 55’
110460-09	Trim ring window, 14’ x 20”
110460-10	Window trim ring, 26.25” x 19.25
110521-01	Trim ring, window, rear egress, 43.94”x24.19”

*For repairs purchase vinyl glues locally.

2001 BAMBI

CHASSIS

7430001H	Axle, 4,000 lb., 19 FT
410849	Axle, Dexter, 3500 Lbs., 16 Ft
0220003	Shock absorber
0250173-15	Bolt, grade 5- 5/8”-18x1.5”, shock mount
0130068-818	Nut, hex head flanged, 5/8”-18, shock mount
410843	Tire /wheel assembly, 15”, BSW, ST225, 19 FT
410834-100	Aluminum wheel, 15 x 6 Safari/Bambi, 19 FT
400844	Dust cover, center hub, Aluminum, 19 FT
400949	Tire/wheel assy., 14” w/alum. Wheel, 16Ft
400949-101	Tire, Goodyear ST 215/75R15, 16Ft. Bambi
400949-100	Wheel, Alum., Hi-Spec, 14 x 5½”, 16 Ft. Bambi
400948	Cap, wheel center, SS, 3.3 in.
400923	Acorn lug nut
401848	Spare tire, 16 ft Bambi, steel rim 14”
200844	Wheel well box, Bambi, 19 ft. Bambi
203289	Liner, wheel well, ABS, 16 Ft Bambi
201565	Tufcote noise barrier, for wheel well
3320028	Jack, front, Atwood
453570	Stabilizer plate, front jack
410598	Foot pad
381416	Step, single, Elkhart#124
453618	Rear bumper, 3” x 78”, 19 FT
410847	Rear bumper, 16 FT
453497	Lid, rear hose carrier
453627	Bottom, rear hose carrier
380024	Support arm, hose carrier lid
380067	Hose carrier lid latch (Cam-o-lock)
381435	Hatch, access cover, 4”, white (power cord)
601544	E-Z Hose carrier, 46in.

2001 BAMBI

CHASSIS

400914-01	Stabilizer jack, rear
400914-02	Handle, rear stabilizer jack
601789	Brkt., LP bottle base
0300027	Break away switch, Bargman
0360254H	Bracket, breakaway switch
450414	“A” frame spare tire carrier
114679	Aluminum, underbelly, .019” x65.75” coil
101131-01	Aluminum, underbelly wrap, .024” x22.5”, gray
400945	5/16” clevis safety hook

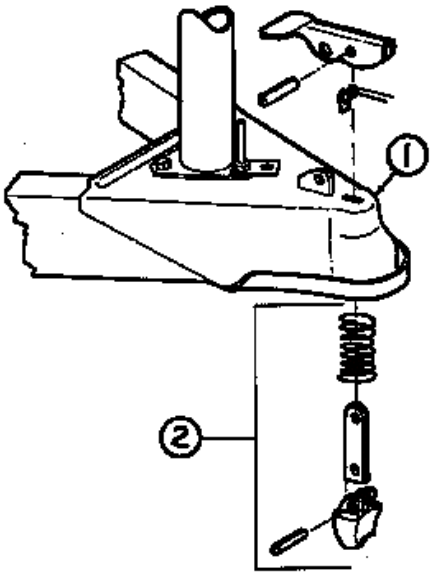

1) 680343	Coupler assembly,2 5/16”
2) 680345	Repair kit,2 5/16” coupler

(continued)

2001 BAMBI

CHASSIS

12” BRAKES, 19 ft Bambi

3160121	Brake drum, 12”, 6 lug
450659	Inner bearing, #25580
680364	Inner race, #25520
450658	Outer bearing, #LM67048
680365	Outer race, #LM67010
680370-100	Grease seal

3160347	Brake assembly, RH,12” Dexter
3160348	Brake assembly. LH,12” Dexter

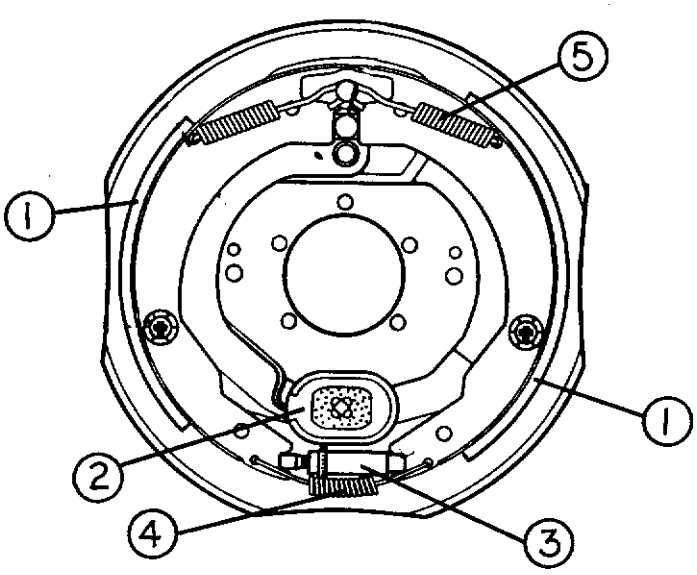

1) 3160348-62	Shoe and lining kit (includes hold down spring and pin)
2) 3160348-65	Magnet kit
3) 3160348-63	Adjuster assembly
4) 3160348-64	Adjusting screw spring
5) 3160348-61	Retractor spring

2001 BAMBI

CHASSIS

10” BRAKES, 16 Ft Bambi

3160255	Brake drum 10”, 5 lug
685016	Inner bearing, #L68149
685017	Inner race, # L68111
680380	Outer bearing, #L44649
680387	Outer race, #L44610
680377	Grease seal

3160096	Brake assembly, RH, 10” Dexter
3160097	Brake assembly. LH, 10” Dexter

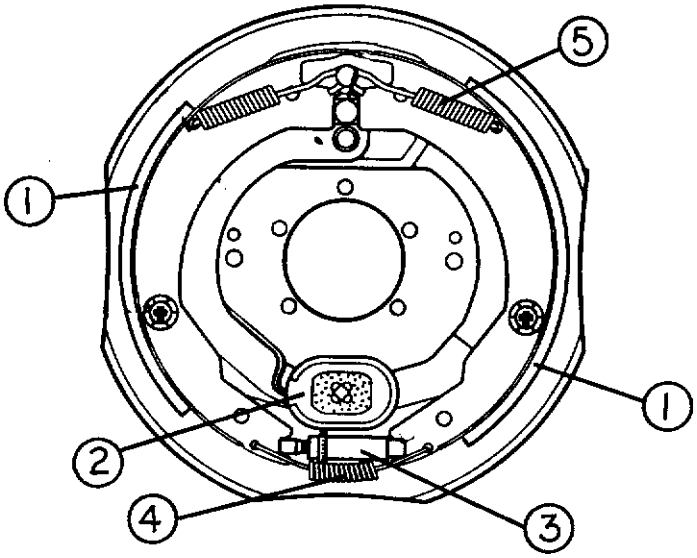

1) 3160097-62	Shoe and lining kit (includes hold down spring and pin)
2) 3160097-65	Magnet kit
3) 3160097-63	Adjuster assembly
4) 3160097-64	Adjusting screw spring
5) 3160097-61	Retractor spring

2001 BAMBI

SECTION II

D through E

DECALS/EXTERIOR TRIM II-1

DOORS/WINDOWS/AWNING
- Doors II-2
- Windows II-3
- Awning II-3

DRAPES/BLINDS/VALANCES II-4

ELECTRICAL
- 110 volt II-6
- 12 volt II-7

ENTERAINMENT
- Radio/antenna II-9

2001 BAMBI

DECALS/EXTERIOR TRIM

19 FT Bambi

386050-01	Decal, main stripe
386051	“Airstream” decal, above front and rear windows
386055	“Bambi” logo
386043-02	Medallion, AIRSTREAM, blue, 8in.
386064-02	Medallion, 70th anniversary, 4 3/8in.
386068	Medallion, 3” logo, AIRSTREAM, screen door

16 FT Bambi

386075	Decal 5/16 black pin stripe decal
386063-03	Medallion 8’ black
386055	Decal logo BAMBI
386051	Decal logo 32” “AIRSTREAM”
386074	Logo “BAMBI” w/PSA backing
386067-03	Medallion 70th anniversary 4 3/8 inches, black
114460	Extrusion, rub rail, 16’
201763-01	Insert, rub rail, chrome, 1”
114466-01	Close out, casting, rub rail, angled RH
114466-02	Close out, casting, rub rail, angled LH
114465-01	Close out, casting, rub rail RH
114465-02	Close out, casting, rub rail LH
114328	Extrusion, beltline
201912	Molding, chrome, beltline insert
114417	Casting close out, belt line

2001 BAMBI

DOORS/WINDOWS/AWNING

(Hardware such as hinges, locks and latches are located in the **hardware** section of this book.)

DOORS

110067-01	Main door assembly
114652	Jamb, main door, pre-formed
114653	Frame, main door, pre-formed
114448-02	Skin, exterior, upper main door
114449-02	Skin, exterior, lower main door
114475	Skin, inner, vinyl clad
114363	Drip cap, main door
365232	Seal, main door
381704	Seal, upper main door (over 365032)
114655	Extrusion, inside door -jamb trim
114654	Screen door assembly
114561	Panel, slider, screen door, before deadbolt addition
114561-01	Panel, slider screen door, after deadbolt addition
114648-01	Kick-panel, screen door, 6.69 x 24.13”
203287-02	Close out, plastic, screen door
380079	Screen, gray
200518	Spline, gray, screen insert
365013	Gasket, screen door, foam tape
386068	Medallion, 3” logo, AIRSTREAM, screen door
922243	Door, refrigerator access
104417	Jamb, refrigerator access door
104439	Louvered panel, refrigerator access door
203225	Trim, flexible, white access door jamb edging
380988	Hinge, .05 in. leaf, 16inch
100679	Side access door assembly
365035	Seal, side access door
601194	Water fill w/lock, gray
690209	Access cover, Atwood water heater

(continued)

2001 BAMBI

DOORS/WINDOWS/AWNINGS

(Hardware such as hinges, locks and latches are located in the **hardware** section of this book.)

WINDOWS

19 FT Bambi

371362-01	Window, 17.75” x 21.25”
371362-02	Window, 19.25” x 22.75”
371362-10	Window, 43.94” x 24.19”
371362-11	Window, egress, Bambi, 43.94” x 24.19”
110460-01	Trim ring, window, 17.75” X 21.25”
110460-02	Trim ring, window, 19.25” x 22.75”
110460-08	Trim ring, window, 44.0” x 24.19”
110521-01	Trim ring, window, rear egress, 43.94” x 24.19”

16 FT Bambi

371362-13	Window, 14 x 20”, obscure entry, 16 Ft Bambi
371362-14	Window-side, 14” x 20” w/vent
371362-15	Window-rear, 26.25” x 19.25”
371362-10	Window, 43.94” x 24.19”

AWNINGS

110102-02	Rock guard, Bambi
685351	Rubber frame, black
683960	Arm support
683959	Arm support bracket
685354	Front window key
702993-04	Awning, patio, 9’ 8”, Zip Dee, 19 Ft Bambi
702993-05	Awning, Cs, Patio, 6’ 8.5”, Zip-Dee, 16Ft Bambi
702993	Hardware package, Zip Dee

2001 BAMBI

DRAPES/BLINDS/VALANCES

19 Ft Bambi

110554	Curtain set, Bambi	
702868-01	Drape, galley, CS, aft, 2-plt	12 x 20.5
702868-02	Drape, galley, CS, fwd, 2-plt	12 x 20.5
702868-17	Drape, front, CS, 19plt	72 x 25.5
702868-18	Drape, front, RS, 19plt	72 x 25.5
702868-21	Drape, bedroom, CS, 19plt	72 x 25.5
702868-19	Drape, bedroom, aft, CS	
702868-20	Drape, bedroom, fwd, CS	
702355-01	Shade, roller type, 20 1/8 x 36”, galley	
964515-02	Valance assembly, RS, front	
964515-01	Valance assembly, CS, front	
964518	Valance assembly, CS bedroom	

16 Ft Bambi

702355-01	Shade, pull, 20 1/8 x 36”
964515-01	Valance, CS front
964515-02	Valance, RS front
702868-01	Drape, galley, CS aft, 2 pleats, 12” x 20.5”
702868-02	Drape, galley, CS fwd, 2 pleats, 12” x 20.5”
702868-17	Drape, frt. dinette, CS 19 pleat, 72” x 25.5”
702868-18	Drape, frt. dinette, RS 19 pleat, 72” x 25.5”
702868-19	Drape, BR aft
702868-20	Drape, BR, Fwd, CS,
702868-21	Drape, BR, 19 pleat, 72” x 25.5”

2001 BAMBI

DRAPES/BLINDS/VALANCES

101220
Bracket, curtain stand off

101217
Track, curtain

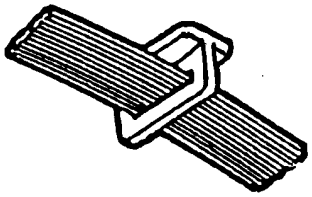

700044
Glides, w/elastic "T" type

114021
Bracket, curtain stand off

101225
Bracket, curtain stand off

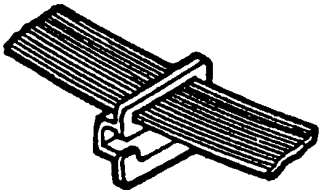

700045
Glides, w/elastic "G" type

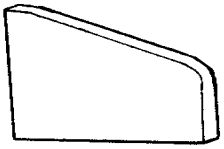

200785
End, curtain track, LH

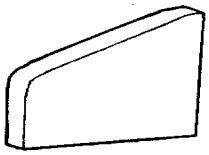

200784
End, curtain track, RH

2001 BAMBI

ELECTRICAL

110 VOLT

510634	Power cord, 36ft., 19 Ft. Bambi
511416-01	25’, power cord w/weather proof connector, 16 FT
511416-02	30-amp, male power inlet, 16 Ft. Bambi
511041	Breaker box, Westinghouse
510564-05	Breaker 30-20,Bryant
510564-04	Breaker 20-20,Bryant
510564-20	Breaker, 20 GFI
510564-07	Breaker 15 GFI, Bryant
453473	Mounting bracket-Breaker box
500563-01	Receptacle, 15 amp, white
511287	Receptacle, 15 amp, single
510676-01	Outlet, exterior, gray
511023	Circuit tester (loose item)
511426	Converter, 55 amp
500933	Switch, water Heater
500967-01	Cover, blank, Ivory

2001 BAMBI

ELECTRICAL
12 VOLT

511132	Battery, deep cycle, lead acid, 19 Ft
511386	Battery box, 19 Ft
511596	Battery, deep cycle, 16 Ft
511595	Battery box, 16 Ft
340023	Latch, Corbin, battery box
453603	Strap, battery box, Bambi
500836	Positive battery cable
500837	Negative Battery cable
500886	7-Way cable w/plug
0300027	Break away switch, Bargman
511426	Converter, 55 amp
510626	Switch, master disconnect
510627	Face plate, disconnect switch
511337	Fuse block, 12 volt, 6 position-ATC type
511248	Light, 12 volt, incandescent, single, interior
511249	Light, 12 volt, incandescent, double, interior
511422-01	Light, map, black
510781	Detector, smoke
511309	Detector, LPG
511341-02	Monitor panel, wall mount
502056	Mounting plate, 12 volt switch
511327	Switch body w/rocker, single, white
510868-03	Switch panel, 4 gang, white, by door
511567-02	Switch body with rocker switches
511566-02	Cover, switch, printed, two-gang white
510807	Outlet, 12 volt
511121	Mounting plate, 12 volt receptacle

(Continued)

2001 BAMBI

ELECTRICAL
12 VOLT

500996	Jack, TV/phone, gray
510654-01	TV jack/12 volt w/splitter, white
510624-01	Modular phone quick jack, white
104619	Mounting plate, exterior telephone/TV jack
511593	Load center, 110V-12V, mdl. LC 30-BB9-P12
511077-03	Cover, switch white w/gold print
510743	Ground bar, 3 ½” long
511411	Junction box, 7 terminals

EXTERIOR LIGHTS/REFLECTORS

500092	Patio light, round, Signal Stat
510161	Bulb, patio light, #1156
510732	Utility light (by door)
500092	Floodlight, Model #3613W
500500	Tail light assembly
510161	Can, #1156 bulb and socket
510160	Can, #1157 bulb and socket
510162	Tail light lens
510163	Back-up light lens
380226	Gasket, tail light lens
201462	Pocket, plastic, taillight
109172	Bezel, chrome, taillight
510111	Clearance light, red, Signal Stat
510112	Clearance light, amber, Signal Stat
500095	Reflector, red, rectangular
500096	Reflector, amber, rectangular
510446	Reflector, red, stick-on w/chrome edge
510163	Reflector, red, 3”
500053	License plate light w/plate mounting bracket

2001 BAMBI

ENTERTAINMENT

511498	Radio, AM/FM/Cassette, Sony, XR-1100MR04
511048	Speaker, 40 Watt, Coustic HS 402
511499	CD changer, 10 unit, Sony CDX -434RF (opt.)
510610	Antenna, radio, side mount, 19 FT
511597	Antenna, AM-FM Rubber 13”
510788-05	Antenna, TV Wineguard, short boom, 16 Ft
500484-05	Antenna lead & extension, 72”
510788-01	TV antenna, Winegard #RV-7004, 19 Ft
510788-03	Amplifier, TV antenna
510613	Coax, 75-ohm w/three conductors
510623	Connector, coax, male to male
114396	Trough, TV antenna
510788-04	Hardware package, interior, Winegard

2001 BAMBI

SECTION III

F through H

FASTENERS (common fasteners available locally are not listed)

Rivets III-1

FLOOR COVERING

Carpet III-3
Mats III-3

FURNITURE

Interior doors III-4
Mirrors III-4
Drawers III-4
Rear bedroom III-5
Bath III-5
Galley III-6
Lounge III-6

HARDWARE

Exterior locks/hinges III-7
Interior drawer slides/hinges latches III-12
Bath accessories III-15
Awning hardware III-17

2001 BAMBI

*FASTENERS

325043
Rivet, buck type
dia. .125”
length ¼”
(hard)

325000-01
Rivet, buck type
dia. .125”
length ¼”
anodized clear

325000-03
Rivet, buck type
dia. .125”
length ¼”
anodized white

325001-01
Rivet, buck-type
dia. 1/8”
length 5/16”
anodized clear

325002-01
Rivet, buck-type
dia. 1/8”
length 3/8”
anodized clear

325004-01
Rivet, buck-type
dia. 1/8”
length 1/2”
anodized clear

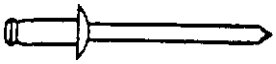

330127-03
dia. 1/8”
grip range .063-.125
aluminum body
aluminum mandrel

300101
1/8” I.D.
washer, aluminum

*Common bolts and screws readily available at local hardware outlets have not been listed.

2001 BAMBI

*FASTENERS

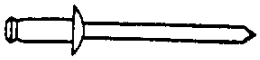

330126-02
rivet, pop
dia. 1/8 “
grip range .126”-.187”
stainless steel body
stainless steel mandrel

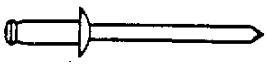

330126-03
rivet, pop
dia. 1/8 “
grip range .126”-.250”
stainless steel body
stainless steel mandrel

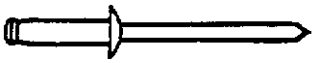

330127-05
rivet, pop
dia.1/8”
grip range .251”-.312”
aluminum body
aluminum mandrel

330128-05
rivet, pop
dia. 1/8”
grip range .251”-.312”
aluminum body, white
aluminum mandrel

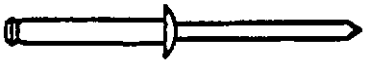

330127-080
rivet, pop
dia.1/8”
grip range .325-.565
aluminum body
aluminum mandrel

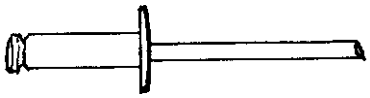

330038
rivet, pop
dia..150” (#20 bit)
grip range .126-.250
aluminum body
aluminum mandrel
(used-screen door hinge)

325103
dia. 1/4”
grip range .080-.325
SS body

*Common bolts and
screws not listed.

2001 BAMBI

FLOOR COVERING

702794-051	Carpet, Spectrum, Satin Blue
700173	Pad, carpet, 3/8” thick
381346-01	Floor mats
703037	Flooring, laminate, bath, Capisto Sand 15.5 x 15.5
801291	Trim, laminate floor
801291-02	Wood trim, stair nose
801291-03	Wood trim, quarter round
703119	Floor vinyl, 3’ x 14’, pattern color, 16 ft Bambi
800639-02	Adhesive, Oak plank

2001 BAMBI

FURNITURE

WARDROBE/CABINET DOORS

19 ft Bambi

		Width x height
964385-16	Door, breaker box cover	7.5” x 13.75”
964385-17	Door	9.13” x 24.0”
964385-18	Door	13.25” x 62.0”
964385-21	Door	15.63” x 11.88”
964385-06	Door	17.75” x 13.75”
964385-28	Door	19.62” x 30.50”
964385-04	Door	23.00” x 8.00”
964385-03	Door	23.50” x 4.5”
964385-19	Door	24.88” x 10.5”

16 ft Bambi

801312-055	Door-w/insert	27.75 x 8.00, maple
801312-015	Door w/insert	13.25 x 52.50, maple
801312-085	Door w/insert	21.50 x 12.25, maple
801312-045	Door w/insert	10.50 x 33.00, maple
801312-025	Door w/insert	15.00 x 33.00, maple
801312-105	Door w/insert LH	10.75 x 29.13, maple
801312-095	Door w/insert RH	10.75 x 29.13, maple
801312-075	Door w/insert	25.50 x 11.75, maple
801312-065	Door w/insert	23.75 x 11.75, maple
801312-035	Door w/insert	17.00 x 16.00, maple

ROOF LOCKER DOORS

964386-01	Door, roof locker, front and rear-RH & LH, 31.25”
964386-08	Face panel, locker end filler, spec. RH or LH, 12.5”
964386-06	Door, roof locker, 32.5”
964503-02	Door, bedroom roof locker, 14” x 41.0”
964386-03	Door, galley roof locker, 28.38”
964386-07	Door, galley roof locker, 15.5” x 24.88”

2001 BAMBI

MISCELLANEOUS DOORS

702937-03	Shower door, roll away 36” x 62”
964539	Bath door assembly, 25.5” x 72
702681-04	Door, foldette, 56” x 73”
381563-01	Track formed, foldette door
701342-01	Strap, vinyl, foldette door
372203-24	Mirror, safety glass, medicine cab. 9.5” x 20”
372203-05	Mirror, safety glass, medicine cabinet, 19” x 14

DRAWERS

201016	Drawer, plastic, 16 x 22”
964906-07	Drawer box, 2.75 x 16.0 x 20.0”
962821-27	Drawer box, 5.00 x 18.0 x 17.50”
965327-02	Drawer box, 5.00 x 8.44 x 12.5
965326-01	Drawer box, 2.75 x 8.44 x 12.50”
965327-01	Drawer box, 5.00 x 8.44 x 18.00”
964906-17	Drawer box 2.75 x 15.00 x 14.00

Drawer face

801313-015	Drawer face	5.00” x 17.00”

2001 BAMBI

FURNITURE

BEDROOM

108433	Header ,foldette door
200003	End cap, header mounting, brown
702681-04	Door, foldette, 56” x 73”
452258	Bracket, mounting, foldette door
701342-01	Strap, vinyl, foldette door
964481	Bed assembly
964250-01	Wardrobe assembly, RS, Bambi
964505	Roof locker, bedroom
381241	TV shelf

2001 BAMBI

BATHROOM 19 Ft

(See hardware section for fixtures.)
(If connected to water, see plumbing)

203114	Shower, two piece fiberglass
203138-03	Extrusion, wall, plastic, beige
702937-03	Shower door, roll away, 36” x 62”
801192-12	Divider panel, bath
801209-004	Doorjamb, bath
964312	Header, bath door
964249-02	Lavatory cabinet assembly
964315	Top, lavatory cabinet
964318	Medicine cabinet, upper
964319	Medicine cabinet, lower
703106	Border Trim

BATHROOM 16 Ft

801209-005	Door Jamb, Bath
964539	Door assembly, 25.5” x 72”
964312	Header, bath door
203372	Trim, doorjamb, ELM plastic
203299	Lavy top
381749	Med. Cabinet
381581	Strap, clear plastic
965283	Wardrobe assembly, RS,
965282	Face frame, wardrobe
203298	Shower pan
601788	Tail piece assy.

2001 BAMBI

FURNITURE

GALLEY

19 Ft Bambi

964482-01	Galley assembly
964483	Top, galley assembly
381615	Tray, plastic, 11”
963990	Magazine rack
961982-01	Sink cover
964514	Spice cabinet assembly
964490	Galley roof locker assembly
964460	Refrigerator cabinet assembly
964461	Top, refrigerator cabinet assembly
511341-01	Range hood

2001 BAMBI

FURNITURE
GALLEY
16 Ft Bambi

965277-01	Galley base assembly, cook top
965276-03	Face frame, galley base
965276-02	Face frame, galley base
965332	Lazy Susan assembly
203306	Shelf, lazy Susan, ABS
965292	Top-Galley
965279	Side, galley R/L assembly
965278	Face frame galley roof locker
965281-00Z	Rear galley roof locker
965280-005	Face frame rear roof locker
203373	Panel Radio
964460-01	Refrigerator cabinet assembly
964385-19	Door-“c” refer, 24.88” x 10.5”
964461	Refer cabinet top assembly
964280-005	Counter top edge molding
964385-28	Refer door, 19.62” x 30.5”
964519	Block, pocket door latch
511341-01	Range hood

16 Ft Bambi Oven Option

965277	Galley, base assy., oven
965276-01	Face frame, galley base
965276-02	Face frame, galley base

2001 BAMBI

LOUNGE AREA
19 Ft Bambi

964484	Dinette seat assembly, RS
964485	Dinette seat assembly, CS
964486	Dinette table assembly
962177-02	Leg, hardwood, 28.50”

16 Ft Bambi

965285	End table assembly
965284	Face frame end table
965293	Top, end table RS
965289	Front roof locker assembly
965288	Face frame, roof locker assembly
964484-01	Dinette seat assembly, LH
964485-01	Dinette seat assembly, RH
801224-01	Cap, dinette seat assembly
800470-005	Stop hardwood 3/4'” Dinette cleat
964385-21	Door, dinette seat, 15.63” x 11.88”
453599	Corner bracket
965294	Dinette top

Front Sofa Option

965290	Face frame, lounge base, fwd.
965290	Face frame, lounge base, base side
965334	Gaucho table, assy.
965333	Table top, Gaucho
381750	Legs, Gaucho table
801312-075	Door, 25.5” x 11.75”

2001 BAMBI

HARDWARE

MAIN DOOR LOCK

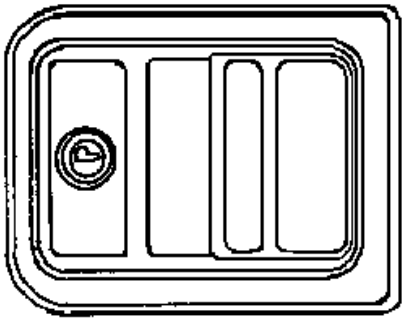

381547-01
Main door lock, outside
Housing

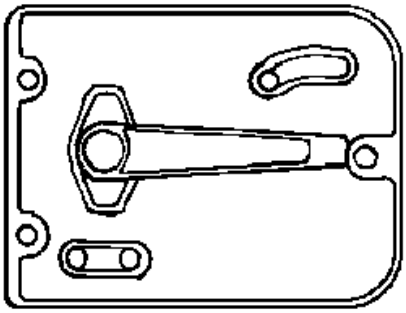

381547-02
Main door lock, inside
plate

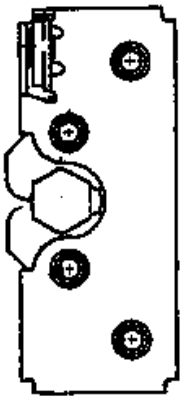

381547-03
Double rotary latch,
main door lock

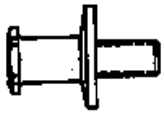

381547-04
Striker bolt w/washer
main door lock

Not shown:

381547-05	Screw package, main door lock
381323-01	Deadbolt, complete assy.
381326	Deadbolt striker
453851	Dead bolt, main door, Tri-mark
203370	Spacer, tri- mark door latch
381550	Plate, striker bolt
385595	Striker pocket

2001 BAMBI

HARDWARE

EXTERIOR LATCHES/LOCKS

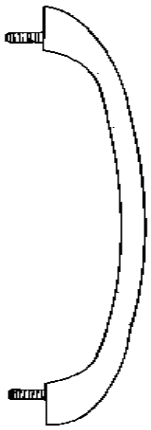

101171
Grab handle, main door

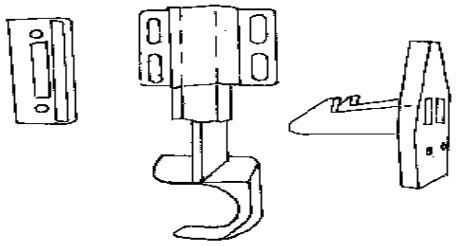

381454
Latch, screen door, Bullet

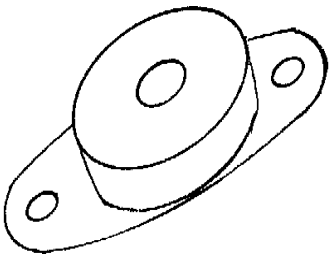

685359
Rubber receptacle
¼” latch, Southco

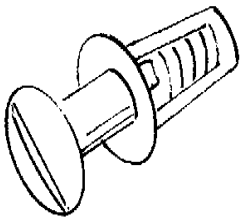

685342
Stud, 1/4 turn latch
Southco

685362
Retaining ring
¼” turn stud

2001 BAMBI

HARDWARE

EXTERIOR LATCHES/LOCKS

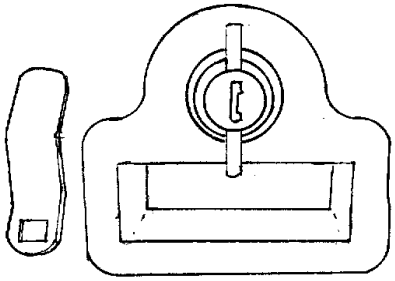

380770-101 Twist lock, chrome
380770-102 Twist lock, black

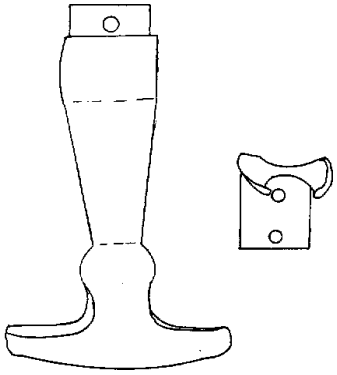

381021 Rubber T handle

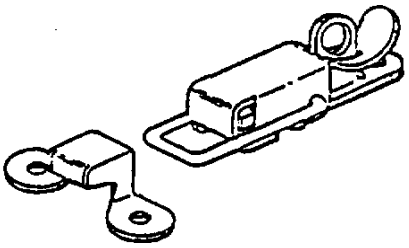

340023
Corbin catch
w/strike, battery box

380067
Lock cam,
bumper lid

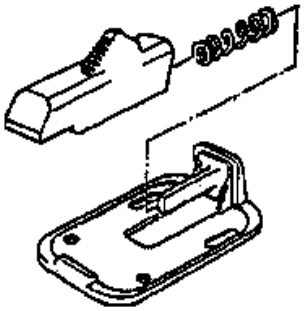

380291
Main door holdback,
(use w/housing #380290)

380290
Latch housing,
main door holdback

2001 BAMBI

HARDWARE

EXTERIOR LATCHES/LOCKS

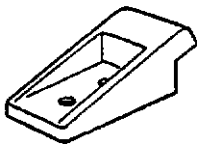

201056
Catch, main door
holdback

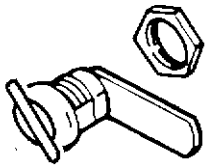

381513
Twist lock
refer. access door

380004
Screen door handle

2001 BAMBI

HARDWARE

EXTERIOR LATCHES/LOCKS

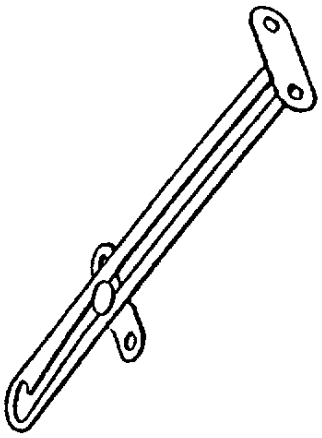

380024
Support arm,
bumper lid

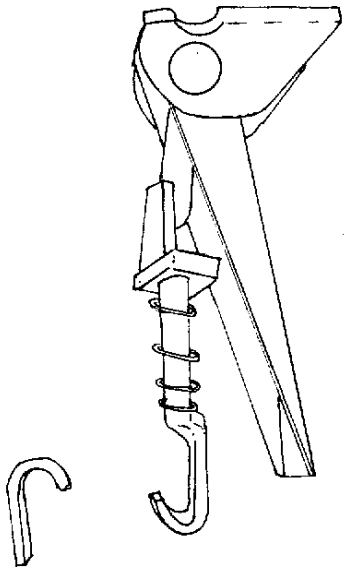

380903
Latch w/strike,
chrome, gas bottle cover

EXTERIOR HINGES

381552-03	Hinge assembly, main door, upper
381552-04	Hinge assembly, main door, lower
381531-01	Hinge, screen door, upper
381531-02	Hinge, screen door, lower
380773	Hinge, access door,13 ¼”
385935-01	Hinge, pivot, trunk door, rear
385395	Hinge, pivot, zinc plated, refer cabinet
380203-01	Piano hinge, 1/8” pin, hose carrier lid

2001 BAMBI

HARDWARE

INTERIOR LATCHES/HINGES

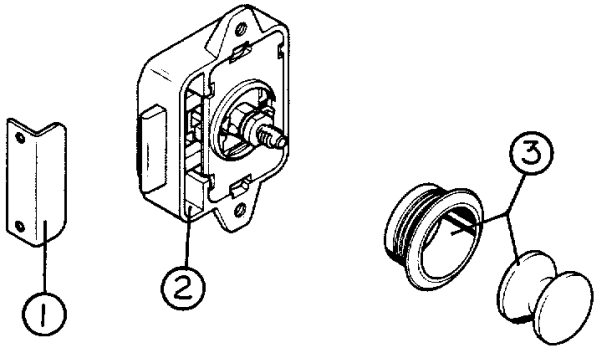

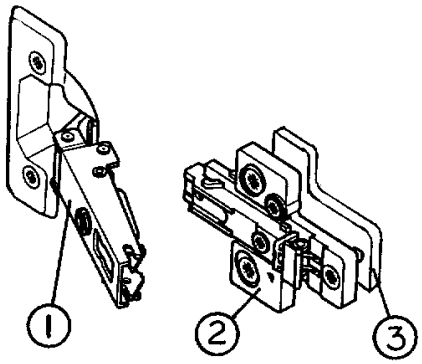

1) 381608-07 Strike plate, rim lock
2) 381608-02 Latch, cabinet, rim lock
3) 381608-03 Push button w/rosette
381608-08 Push button latch
381608-07 Striker plate, push button

1)381607-01 Hinge,cabinet
2)381607-02 Base, metal
3)*381607-03 Base,plastic
381608-09 Rosette Hafele

*Not used in all applications

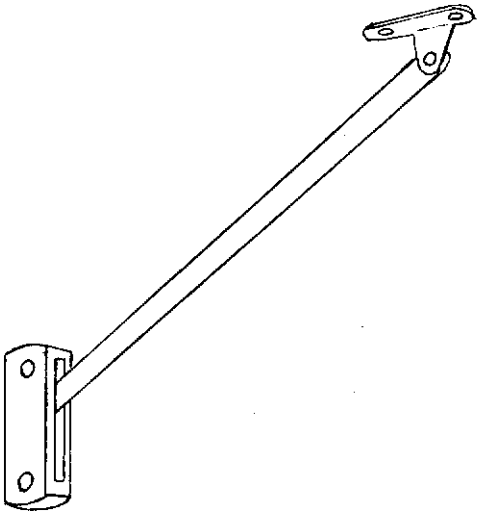

381608-04
Support arm, roof locker, RH
381608-05
Support arm, roof locker, LH

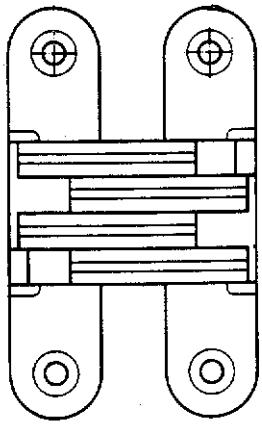

380040
Soss hinge,
lift up table

2001 BAMBI

HARDWARE

INTERIOR LATCHES/HINGES

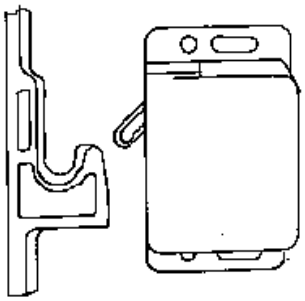

381228 Grabber door latch w/catch,10lb.rating

381228-01 Grabber door latch w/catch,3lb. rating

381228-100 Catch only, grabber door latch

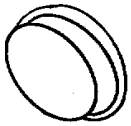

201427 Finger pull, light brown

381603 Pull, three finger Antique brass

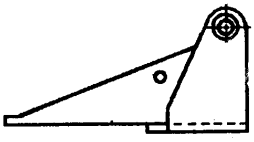

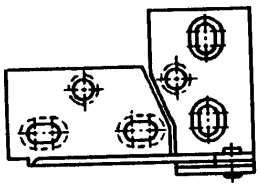

381599 Handle, drawer/door, brass

381599-01 Handle, drawer/door, chrome

385935-01 Hinge, pivot, zinc, pivot, zinc plated

2001 BAMBI

HARDWARE

INTERIOR LATCHES/HINGES

360012
Bumper, rubber
white, stick-on, cylindrical
360012-01
Bumper, rubber
brown, stick-on, cylindrical

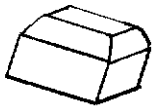

360016
Bumper rubber
gray, square 3/8” x 3/8”

195329-220
Bumper, rubber
clear, stick-on oval

385587
Cap, rubber
hood bumper, black

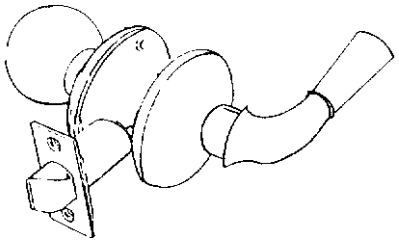

381022
Latch, swinging
bath door

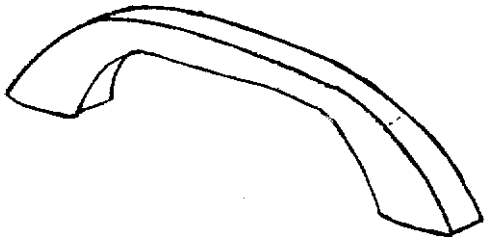

381737
Grab bar, interior,
mounts on interior
doorjamb

2001 BAMBI

HARDWARE

BATHROOM ACCESSORIES

380034	Toilet paper holder, chrome
381259-01	Towel bar, 18”, chrome
380259-03	Brackets, chrome towel bar
380248	Soap dish
380017	Holder, tumbler and toothbrush

HINGES

381607	Hinge assembly, Euro style, Grass
380458	Hinge, piano, 3/32” pin, 5/8” leaf, brown
380210	Hinge, 2” metal, bed top
385935-01	Hinge, pivot, plated, medicine chest
381614	Folding shelf bracket, galley
381072	Hinge, 3” X 1 7/8” open, gold

WARDROBE

380045	Clothes rod
200975-04	Conduit, flexible, black (covers clothes rod)
380046	Bracket, clothes rod
101042	Spiral support

MISCELLANEOUS

701342-01	Vinyl strap, sliding door hold back (female snap on both ends)
381526-01	Drawer slide, 950-RV, 14”
381526-03	Drawer slide, 950 RV, 18”
381526-06	Rear bracket, drawer slides
381386	Dual lock strips for shelf installation
701624	Velcro loop, 5/8” wide
701625	Velcro hook, 5/8” wide
381747	Hinge pivot, bronze, dinette

2001 BAMBI

HARDWARE

Drapes

703128-01	Brackets, stand, café rod, 16 ft Bambi
703128-02	Bracket, snap fit, 16 ft Bambi
703128-03	Extendable rod, brass 7/16”, 16 ft Bambi
703128-04	Extendable rod, brass 7/16” 16 ft Bambi

2001 BAMBI

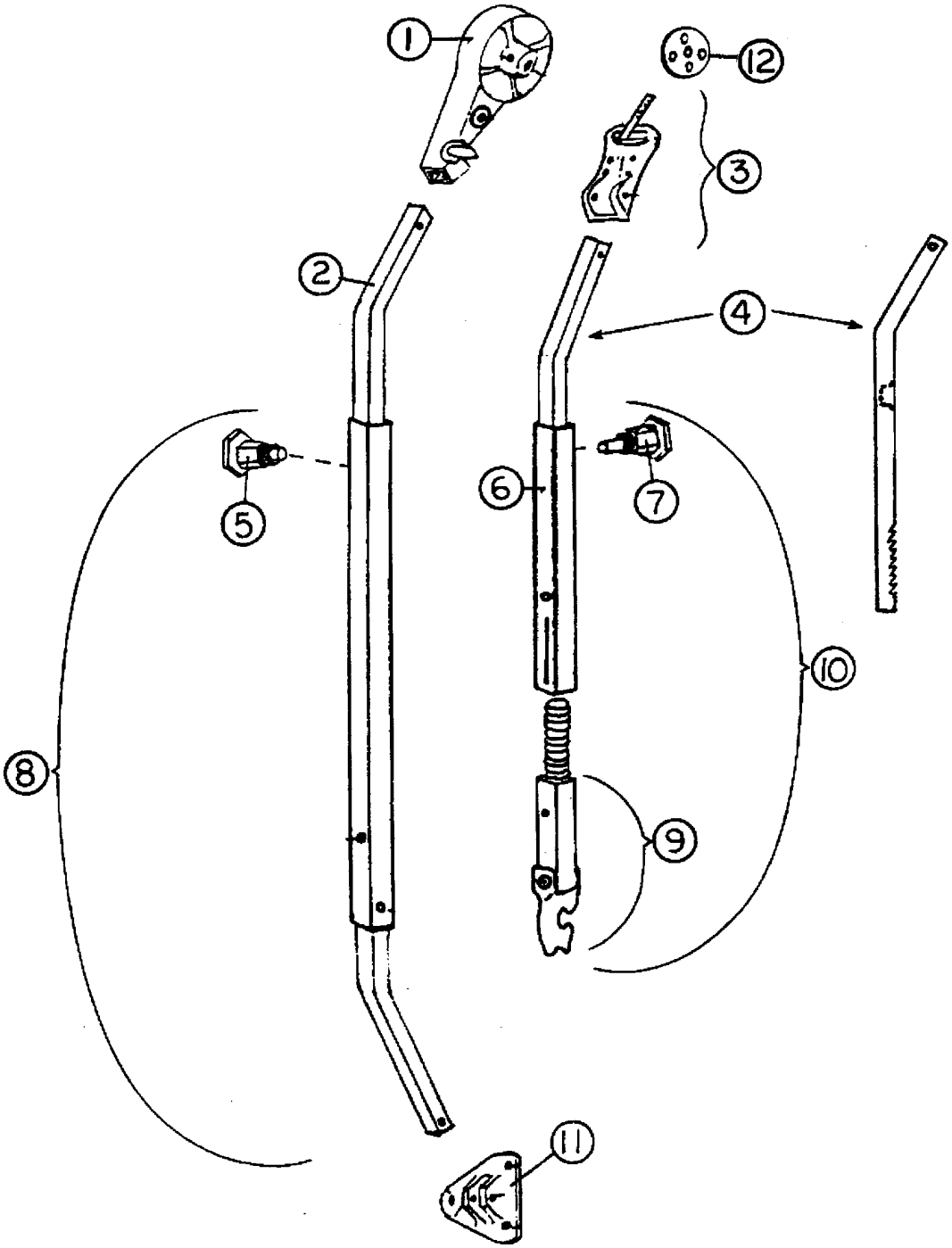

See next page for P/N.

2001 BAMBI

HARDWARE

AWNING HARDWARE

1) 702662-100	Head assembly, front or rear
2) 702662-101	Main arm bar, front or rear
3) 702622-103	Clamp assembly, front, curved
3a) 702662-104	Clamp assembly, rear, curved
4) 702662-105	Rafter arm bar, satin
5) 702662-106	Snap stud assembly
6) 702662-107	Rafter arm tube, satin
7) 74072W	Ratchet stud
8) 74048W	Main arm tube assembly, front or rear
9) 702662-110	Claw bar assembly
10) 702662-111	Rafter arm assembly
11) 702662-112	Base hinge, rib mount
12) 702662-114	Clamp wheel

2001 BAMBI

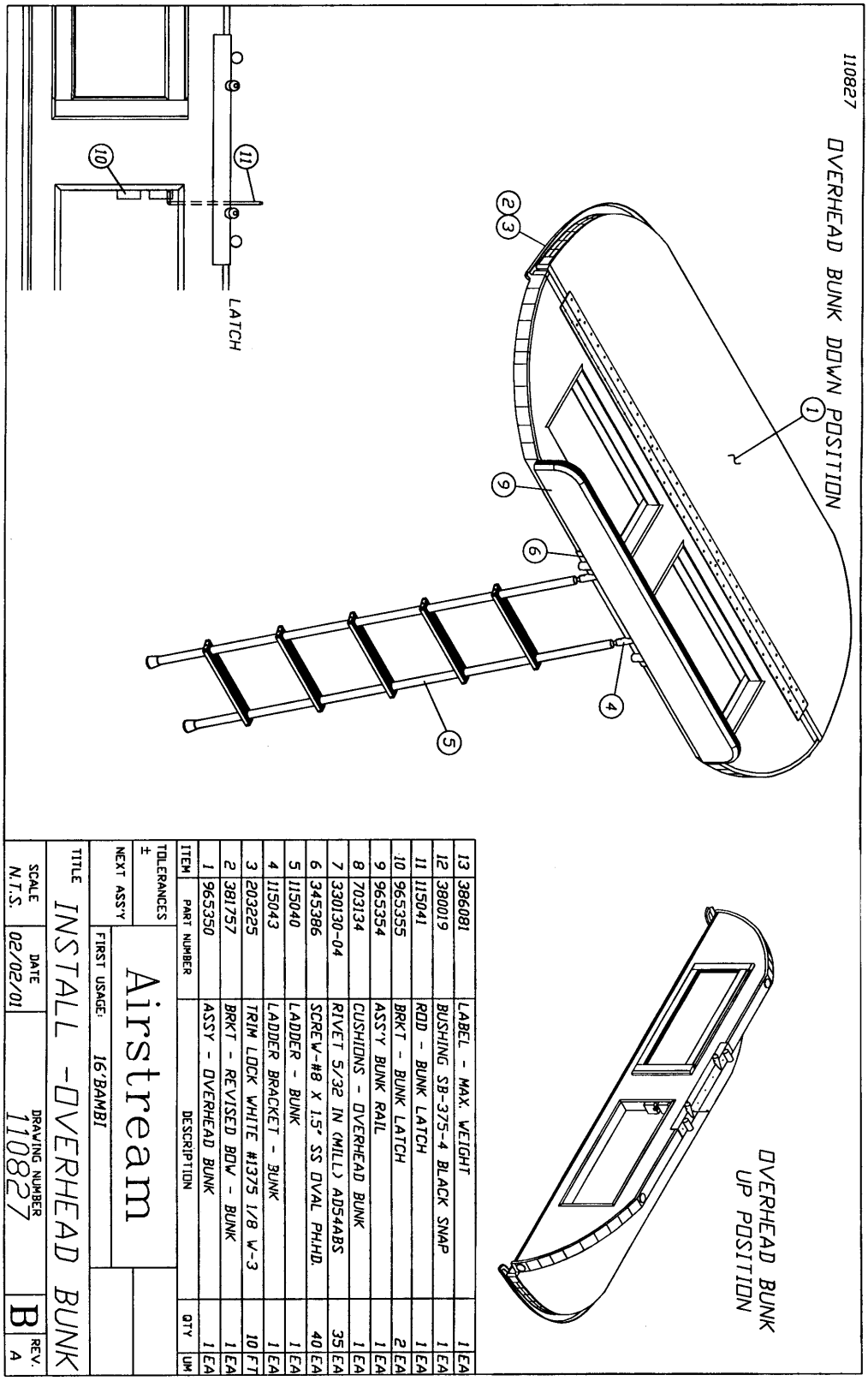

Not Shown

203378	U-channel vinyl
381758	Hinge, Aluminum 72.00”

2001 BAMBI

SECTION IV

L through Z

LABELS and TAGS IV-1

PLUMBING

- LPG IV-2
- Fresh water IV-3
- Faucets IV-5
- Drain water IV-8
- Toilet IV-13

SAFETY EQUIPMENT IV-14

SEALER/GASKETS/PAINT IV-15

UPHOLSTERY/FOAM/MATTRESS IV-16

VENTS/FANS IV-17

WOOD/LAMINATES/TRIM IV-18

2001 BAMBI

LABELS AND TAGS

385193	Label,”12V distribution panel inside”
385048	Label, approval with shield
385269	Label, ”DON’T USE AREA FOR STORAGE”
385068	Tag, cooking appliance warning
385067	Label, EXIT
385547	Label, LP gas warning/fill
385517	Label, kill switch warning
385521	Label, emergency egress window
385463	Warning label/cooking appliance
385464	Label, LP gas warning label(odor)
385465	Exit label, English
385560	Label, air conditioner rating
385812	Label, Calif. hazardous substance
385609	Label, smoke detector
385359	Label, microwave or air conditioner
385837	Label, refrigeration ignition
385103	Plate, RVIA
385418-01	Label, Federal registration
385062	Decal, 110-125 voltage AC
385565	Label, holding tank flushing
385972	Label, fuse 12volt
386019	1 Amp Fuse Max
952613	Chart 12V Location
386012	Label warning, water heater
386077	Label, 120-volt circuit breaker panel
386078	Label, 12V fuse panel

2001 BAMBI

PLUMBING

LPG SYSTEM

601710-01	LP gas bottle,30 lb. steel, 19 ft Bambi
601781	LP bottle, 20 lb., 16 ft Bambi
601686	Base plate, LP tank mounting
601687	Hold down kit, LP tank
601731	LP regulator, Marshall Brass w/pigtails mounting bracket & cover
601731-100	LP pigtails, 15in.
601412-12	Connector-M, .50 pipe to .62 tube
601685-01	LP hose, ½” FPT x 3/8”F, 36”
381613	Plastisol cover-LP wing handle, 16 ft Bambi
601684-101	Bracket, mounting, LP regulator, 19 ft Bambi
601684-102	Cover, Marshall Brass regulator, 19 ft Bambi
600468	Union flare, 5/8” x 5/8”
600238	Union flare, 3/8” x 3/8”
600004	Copper tubing, 5/8”
600008	Copper tubing, 3/8”
600436	Flare nut, forged, 5/8”
600435	Flare nut, forged, 3/8”
600000	Tee, brass, 5/8” x 5/8” x 3/8”
600003	TEE, 5/8 x 3/8 x 3/8”
601159-02	Tubing, .50 inch, Poly CSA approved
104264	Gas bottle cover w/o decal, 19 ft Bambi
380903	Latch and strike
200841	Lid, plastic, bottle cover
380773	Hinge, access door

2001 BAMBI

PLUMBING

FRESH WATER

601194	Water fill w/lock, gray
601708-01	Tank, fresh water, 19 ft Bambi
601785	Tank fresh water, 16 ft Bambi
453619	Strap fresh water tank, 16 ft Bambi
601239	Tubing, 1.375 I.D., flexible, water fill hose
601061-03	Water pump, Shurflo
600668	Filter, pre-water pump
601588	Drain cock, brass, water line drain

CITY WATER

600139	Check valve, brass
600362	Connector, ½”FPT x water hose, swivel
600336	Plug with chain
601690	Nipple, ½” MPT x 2.50”
601689	Drop ell, 90 degree, ½” FPT
600309	Regulator, Watts, ½” FPT
601469	Vacuum breaker, ¾”. garden hose
601467	Sill cock, ½”, female
601768	TEE-Brass, ½ x ½ x ½”
601763	Valve, hot water bypass

FITTINGS

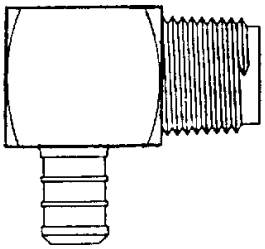

601698-04
Elbow, ½” barb
x ½” MPT

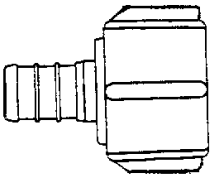

601698-03
Coupler, ½” barb
x ½” FPT

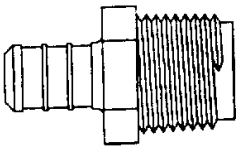

601698-02
Coupler, ½” barb
x ½” MPT

(Continued)

2001 BAMBI

PLUMBING

FRESH WATER-FITTINGS

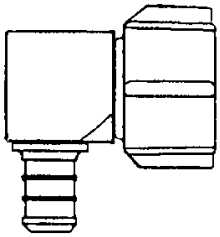

601698-05
Elbow ½” barb x
½” FPT

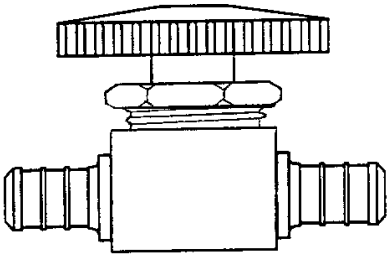

601698-07
Shut-off, ½” barb x
½” barb

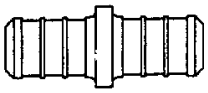

601698-08
Coupler
½” x ½” barb

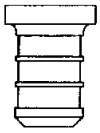

601698-09
Plug, ½” barb

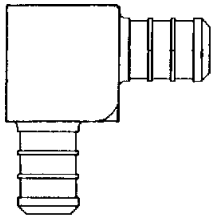

601698-10
Elbow ½” barb x
½” barb

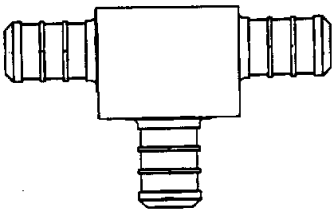

601698-11
Tee, ½” x ½” x
½” barb

601698-15
Crimp ring, ½”
E-Pex, ½” (black)

601698-01
E-Pex tube, ½”

2001 BAMBI

PLUMBING

FRESH WATER FAUCETS

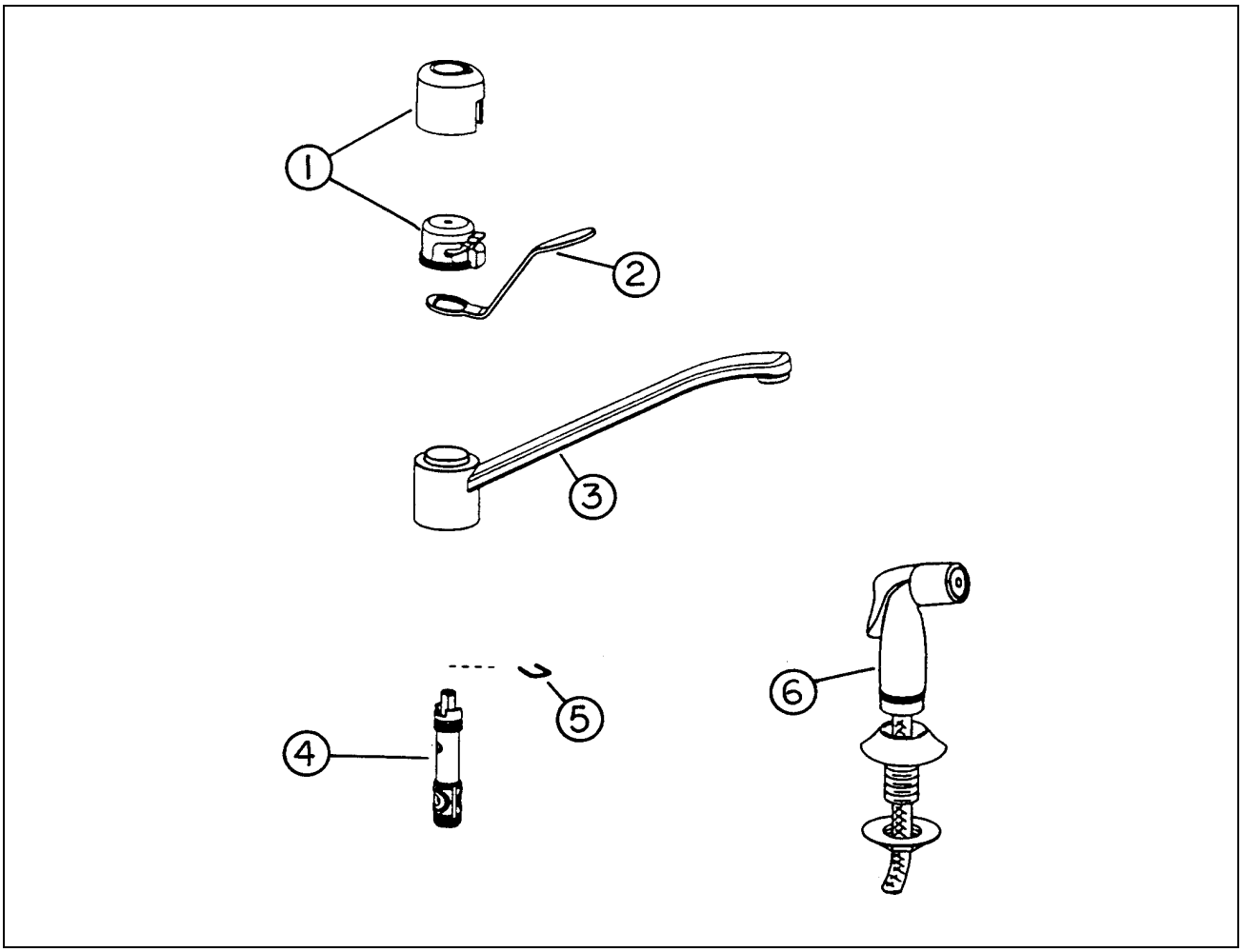

601746 Galley faucet, Moen Manor

1) 013098	Galley lever handle set, Moen
2) 601746-100	Lever handle, Moen
3) 601746-101	Spout assembly, 9” Moen
4) 601579-106	Cartridge, Moen #1225
5) 601579-105	Horseshoe clip, cartridge retainer
6) 601418-100	Spray head and hose, Moen

2001 BAMBI

PLUMBING

FRESH WATER FAUCETS

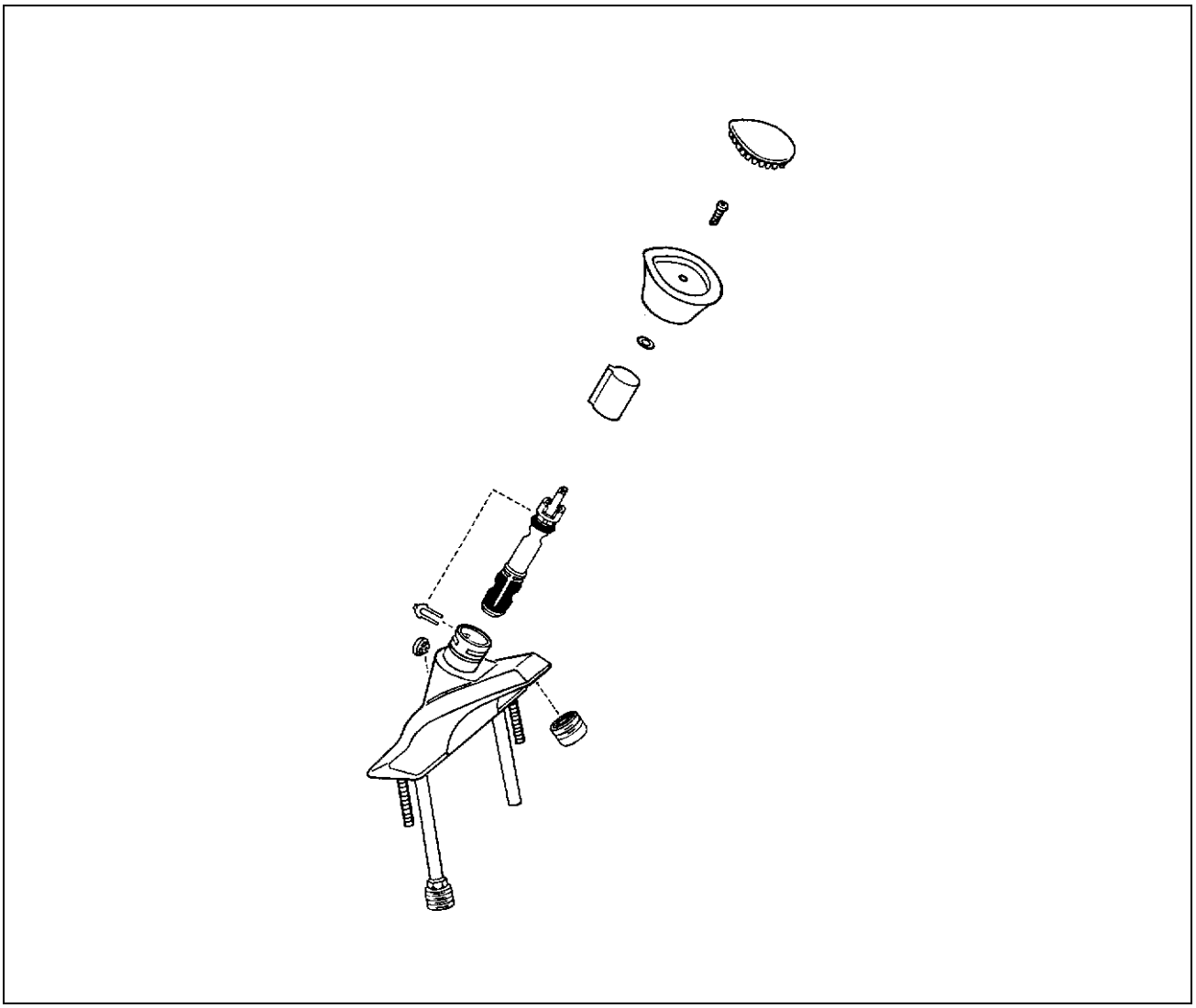

601419-01 Faucet, lavatory, Moen, chrome

1) 001245 Knob
2) 601579-105 Cartridge
3) 601579-104 Retainer clip

PLUMBING
FRESH WATER-FAUCETS

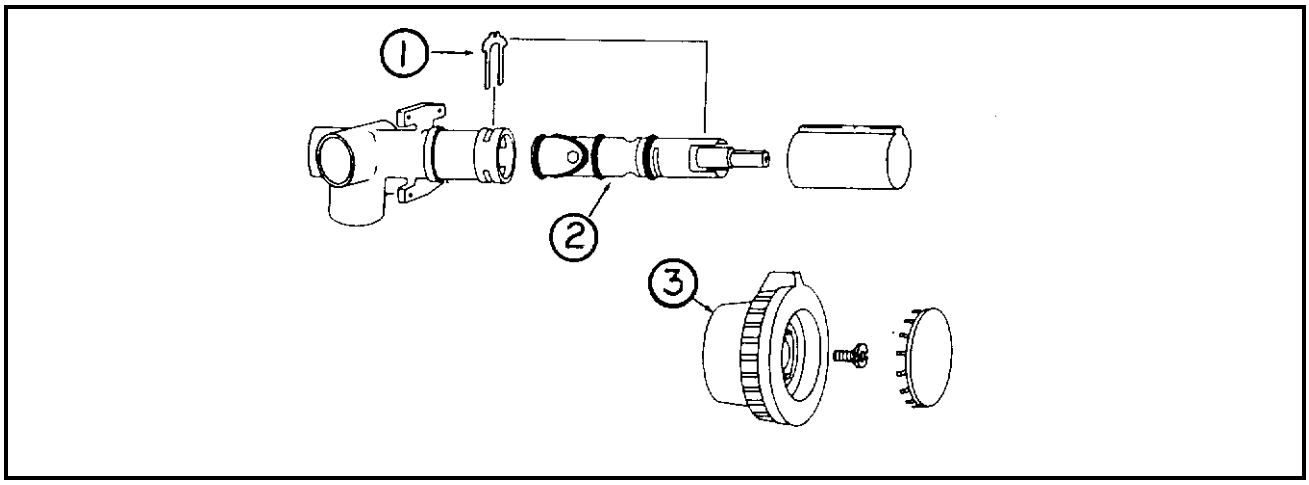

601420-01 Faucet, shower

1) 000883	Retainer clip
2) 601420-100	Cartridge
3) 001041	Handle

Not shown:
601358
Shower kit includes:
Shower hose, shower head,
Vacuum breaker and wall mounts

2001 BAMBI

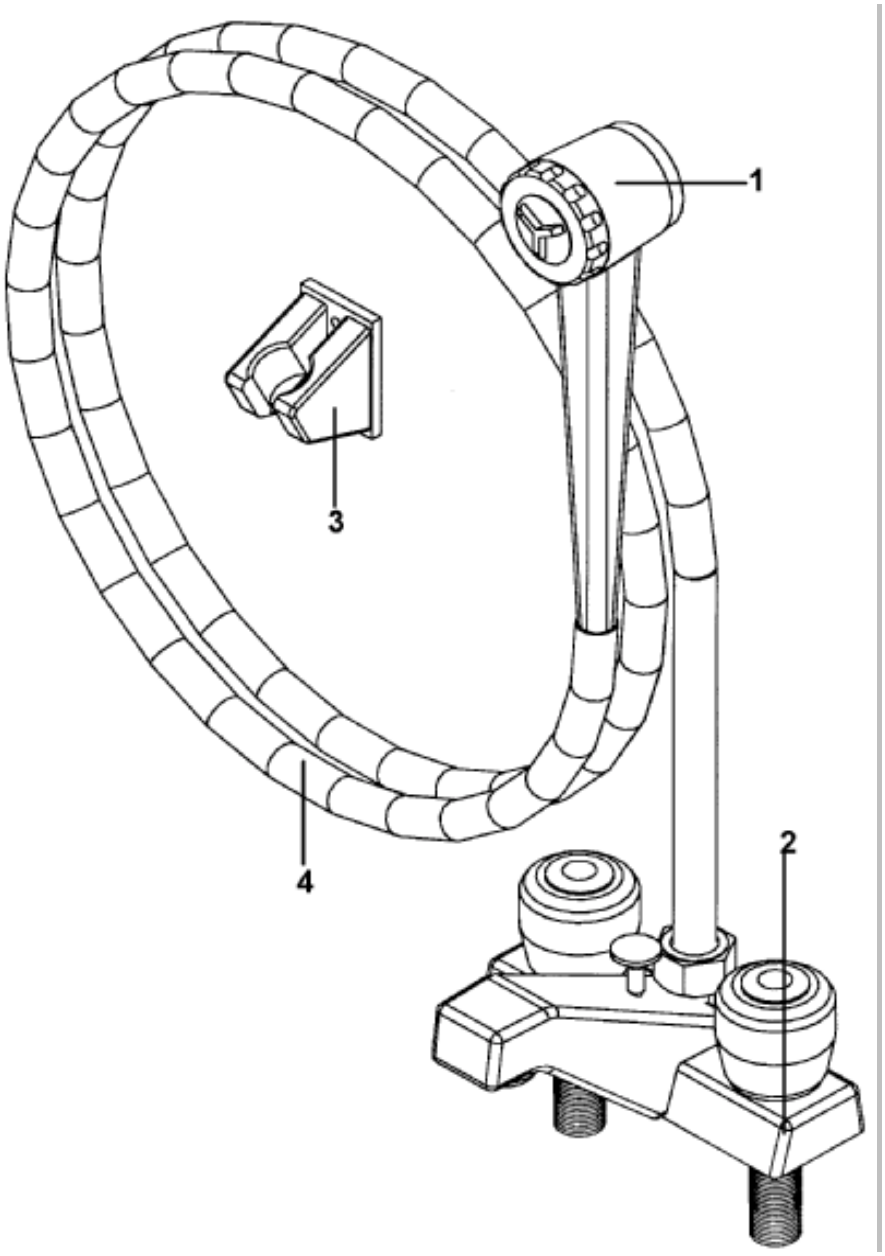

601782 Faucet wet bath, 16 Ft Bambi

1) 601782-03	Chrome showerhead
2) 601782-01	4” lavatory diverter
3) 601782-04	Chrome wall bracket
4) 601782-03	Chrome hose

2001 BAMBI

PLUMBING

DRAIN SYSTEM

Gray tank

601707-01	Holding tank, gray, 19 Ft Bambi,
601707-02	Holding tank, gray, 16 Ft Bambi
601717	Pan, gray tank
511018	Harness, Tank, Ventline L745
453622	Gray tank pan closeout, 16 ft Bambi

Black Tank

601706-01	Holding tank, black, 19 ft Bambi
601482	Dump valve assembly, 19 ft & 16 ft Bambi
600183	3” Ell, long sweep
601707-03	Holding tank, black, 16 ft Bambi
964478	Slope pad-Black tank

Sink/Showers

203114	Shower stall, two-piece, Bambi
600594	Tub strainer, w/rubber stopper
601715-01	Sink, porcelain, galley
195362-39	Strainer, 2”
200406-06	Lavatory bowl, oval(includes stopper, basket and tail)

1½” DRAIN FITTING

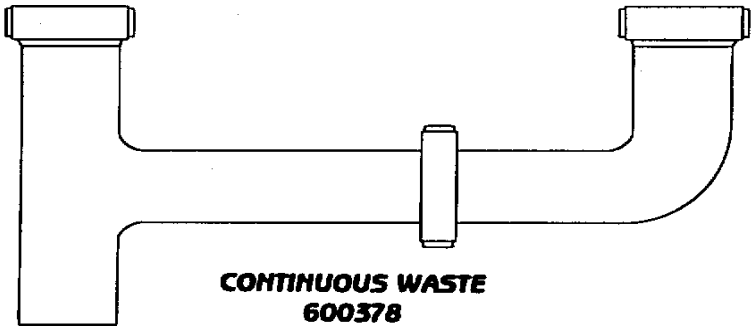

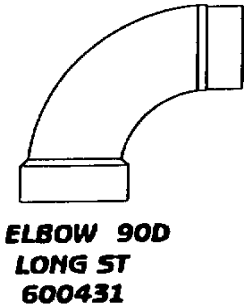

(Continued)

2001 BAMBI

PLUMBING

DRAIN FITTINGS, 1 1/2”

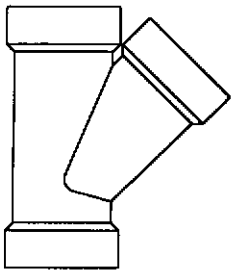

WYE
#2301
600094

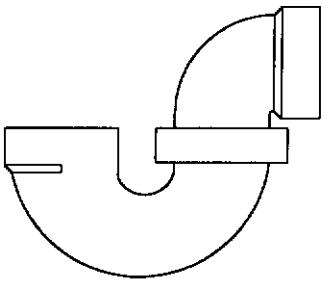

P-TRAP
1.5” W/O SLIP NUT
600144

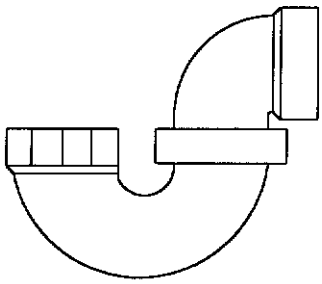

P-TRAP
1.5” WITH SLIP NUT
600622

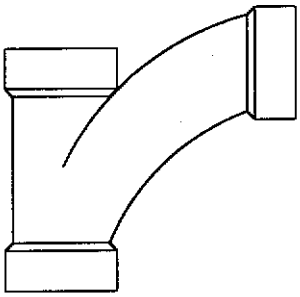

WYE 1.5”
1/8” BEND
600182

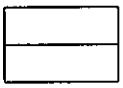

COUPLING
1.5”
600227

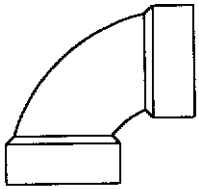

ELBOW 90D
SHORT SWEEP
601636

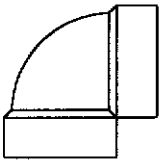

ELBOW VENT
90D
600033

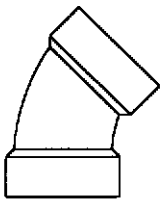

ELBOW 45D
LONG TURN
600030

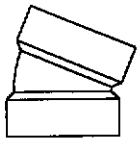

ELBOW 22.5D
SHORT TURN
600116

(Continued)

2001 BAMBI

PLUMBING

FITTINGS,1.5” PLASTIC

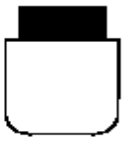

VENT 1.5”
600538

PLUG 1.5”
600155

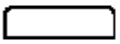

CAP 1.5”
601677

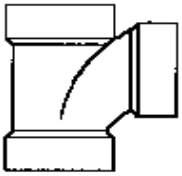

TEE-SANITARY
1.5”
600156

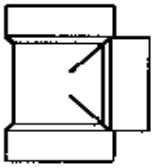

TEE-BI DIRECTIONAL
CLEAN-OUT 1.5”
601318

ELBOW 45D
LONG ST
600027

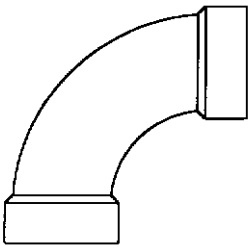

ELBOW 90D
LONG TURN
600035

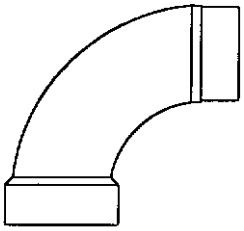

ELBOW 90D
LONG ST
600431

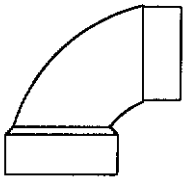

ELBOW 90D
SHORT ST
600662

REDUCER 1.5” TO 1.25”
601263

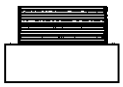

ADAPTER
601676

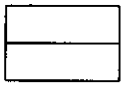

ADAPTER
W/FEMALE THREADS
600308

2001 BAMBI

PLUMBING
THETFORD, AQUA MAGIC IV, FOOT FLUSH, WHITE

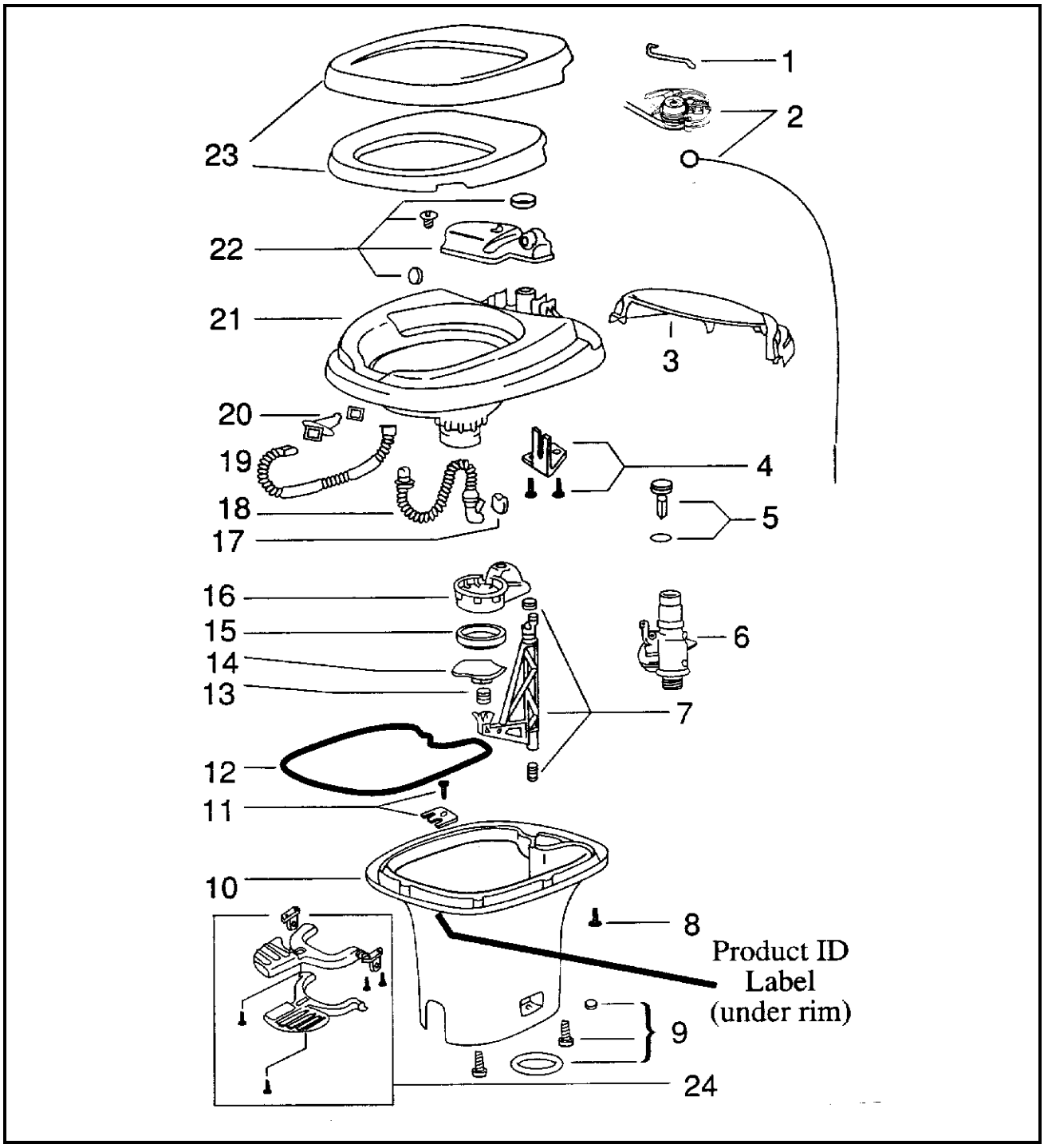

See next page for P/N.

2001 BAMBI

PLUMBING

THETFORD, AQUA MAGIC IV, FOOT FLUSH, WHITE

690387 Toilet complete, Aqua Magic IV, low profile

1)	690387-513	Water valve link
2)	690387-571	Wire replacement package
3)	690387-562	Mechanism cover, white
4)	690387-634	Bracket assembly
5)	690387-631	Float assembly
6)	690387-168	Water valve replacement package
7)	690387-632	Actuator assembly
8)	690387-659	Screw base to bowl
9)	690387-524	Closet bolt package
10)	690387-356	Base, white, low
11)	690387-636	Retainer assembly
12)	690387-387	Sealant, base to bowl
13)	690387-519	Blade spring
14)	690387-262	Blade
15)	690387-481	Blade seal
16)	690387-520	Blade track
17)	690387-512	Flapper
18)	690387-511	over flow tube
19)	690387-509	Flush tube
20)	690387-637	Nozzle assembly
21)	690387-726	Bowl
22)	690387-630	Reservoir tank assembly
23)	690387-162	Seat and cover assembly
24)	690387-821	Pedal package

2001 BAMBI

SAFETY EQUIPMENT

510781	Smoke detector
511309	LPG detector
600162-01	Fire extinguisher

2001 BAMBI

SEALER/GASKETS/PAINT

6000360	Sealant, Butyl #884058
360074	Sealant, white, 3 oz. tube
360001	Sealant, #884058
360002	Sealant, Vulkem 11.5 oz. tube
360209	Sealant, seam
360176	Sealant, Almond, kitchen and bath
360180-04	Sealant, Sika-flex #221,black, tube
360180	Sealant, Sika-flex, gray
360210	Sealant, Paralastic 4334-014
365264	Sealant, spray foam

GASKETS

365035 Gasket access doorjamb

365013 Gasket screen door

*365232 Gasket main door

371593-711 Glazing rubber, Creation window

371593-713 Seal plastic, sash Creation window

371593-712 Foam seal, sash Creation window

*381704	Seal, main door, upper (top of main door gasket)
381665	Gasket, D seal, window frame to shell
380226	Gasket, taillight lens
380114	Gasket, vent pipe
365016	Tape, foam, double face, ½” wide
365001	Tape, vinyl foam, double face
365222	tape, double-coated, rib to shell

360151	Paint, gray metallic Centari #44146A
360200-01	Hardener, Centari
360213	Paint, Aluminum metallic, Centari #65751
360260	Paint, Pewter

2001 BAMBI

UPHOLSTERY/FOAM/MATTRESS

REAR BEDROOM

702905	Mattress, double, 48” x 76”, Bambi
702704	Mattress, double, 52” x 75”, 23, &, 25ft. “C”
*702904-159	Bedspread, Bambi, Kodiak
701611	Pillow,21 x 31,all models

FRONT DINETTE,BAMBI

998070-03	Cover, seat, side dinette
998071-03	Cover, backside dinette
702464-16	Foam, dinette, upper back
702464-13	Foam, dinette lower back
702933-01	Foam, dinette seat, LH
702933-02	Foam, dinette seat, RH

*Changing the -(dash)number to:

169= Rain Forest
070= Woodland

2001 BAMBI

VENTS/FANS

690394	Power ventilator, refrigerator, Bambi
690264-03	Vent pipe cover, plastic, white
380114	Gasket, vent pipe
380228	Wire, hardware cloth
381606-01	Vent, roof, 14 x 14”, non-power, white
381606-02	Trim ring, interior, roof vent, white
690266-01	Ventilator, power, bath
511341-01	Range hood
511017-11	Vent cover, exterior, range hood, gray
100341	Vent collar, refrigerator, large, 19 ft Bambi
101394	Cover, refrigerator vent, large 19 ft Bambi
230305	Refer vent, 16 ft Bambi
318450	Vent, Fantastic roof, #6000RBT DL, (Option 16 ft Bambi)

2001 BAMBI

WOOD/LAMINATES/TRIM

PLYWOOD

800506-04	Plywood, ½” x 4’ x 8’
800976-01	Plywood, tongue and groove, 19/32” (floor)
800506-05	Plywood, 5/8” x 4’ x 8’
800583	Plywood, Birch Baltes(cutting boards) 5/8” x 5’ x 5’
801068-06	Plywood, G2S, ¾” x 4’ x 8’

PANELING

00Z=002-walnut, 003-hickory, 004-oak, 005-maple

800507-01	Panel, lauan, 1/8 x 4’ x 8’
800507-02	Panel, Luan, ¼’x 4’ x 8’,raw/raw
800507-03	Panel, Luan, 3/8” 4’ x 8’,raw/raw
800507-04	Panel, Luan, ½” 4’ x 8’,raw/raw
801191-00Z	Panel, G1S, 1/8” x 4’ x 8’, Finished vinyl
801261	Panel, G1S, 1/8” x 4’ x 8’, Antiquity Buff
801180-00Z	Panel, G2S, Finished/Finished, ½” x 4’ x 8’
801181-00Z	Panel, G1S, 5/32” x 4’ x 8’, Finished/raw
801182-00Z	Panel, G2S, 5/32” x 4’ x 8’, Finished/Finished
801283	Panel, G2S, ½” x 4’ x 8’, Antiquity Buff/Ant. Buff
801179-00Z	Panel, G1S, ½” x 4’ x 8’, Finished/raw
801274	Panel, G1S, ½” x 4’ x 8’, Antiquity Buff
801180-00Z	Panel, G2S, ½” x 4’ x 8’, Finished/Finished
801203-004	Panel, G2S, ½” x 4’ x 8’, Oak 6mil
801183-00Z	Panel, G2S, ½” x 4’ x 8’, Finished/Antiquity Buff
801284-00Z	Panel, G2S, ½” x 4’ x 8’, Maple/Antiquity Buff
365251-01	Tape, seam, Antiquity Buff, 1 1/8” wide
365251-02	Tape, seam, Antiquity Buff, 8” wide
365251-03	Tape, seam, Antiquity Buff, 12” wide

(Continued)

2001 BAMBI

WOOD/LAMINATES/TRIM

LAMINATES

801229	Laminate, Oak, high pressure,.045-.050
801169	Laminate, Beige Pampas,.042 (galley top color)
801310-005	Pre-laminated panel, 5’ x 10’ counter top, maple
801230	Pre-laminated panel, Oak, 5/8” x 4’ x 8’, luan core
801212-01	Pre-laminated panel, Beige Pampas, 5/8” x 4’ x 8’
801319	Laminate-HP1.75” x 144” CAL GRAY, table top
801184-01	Laminated lumber core, .75” x 1.5” x 8’, oak
801184-03	Laminated lumber core, .75” x 2.0” x 8’, oak
801184-07	Laminated lumber core, .75” x 3” square, oak
801184-04	Laminated lumber core, .75” x 2” radius, oak
801184-015	Laminated lumber core, .75” x 1.5” square, maple
801184-035	Laminated lumber core, .75” x 2.0” square, maple
801184-025	Laminated lumber core, .75” x 1.5” Radius, maple
801184-055	Laminated lumber core, .75” x 2.5” square, maple
801184-075	Laminated lumber core, .75” x 3” square, maple
801184-095	Laminated lumber core, .75” x 4”, square, maple
801184-105	Laminated lumber core, .75” x 6”, square, maple
801184-045.	Laminated lumber core, .75 x 2”, radius, maple
801184-115	Laminated lumber core, .75 x 8”, square, maple
801184-155	Laminated lumber core, .75 x 1”, square, maple

TRIM

801195	Corner trim, 1” radius
800766-00Z	Trim, hardwood, .50 groove x 8’, panel edging
365238-03	Edge-banding tape, PVC 5/8”, horizon
365238-01	Edge-banding tape, PVC 15/16”, horizon
800405	Plug, hardwood button, screw cover

(Continued)

2001 BAMBI

WOOD/LAMINATES/TRIM

TRIM

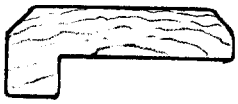

800617-014 Molding
Wainscoat, oak

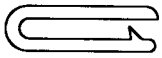

203225 Trim
lock, white

201728-03 Extrusion
plastic, ceiling trim, white

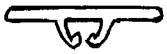

201728-01 Extrusion
ceiling trim retainer

203159-02 Trim,
divider bar

201666 Molding, “J”
trim, plastic

203138-01 Extrusion,
panel edging, white

203138-02 Extrusion,
panel edging, brown

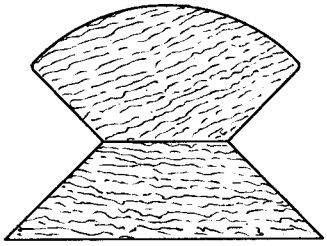

801282-00Z Corner trim
1”radius

2001 BAMBI

WOOD/LAMINATES/TRIM

TRIM

Z=2-walnut, 3-hickory, 4-oak, 5-maple

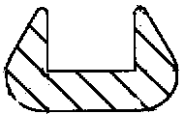

800766 Edge trim
hardwood, oak

801172-01Z
801172-04

800572-01Z

800573-01Z

801172-01Z	Molding, flexible corner, Oak
801172-04	Molding, flexible corner, Antiquity Buff
800572-01Z	Molding, flat radius, .88” Oak
800573-01Z	Molding, flat radius, 1.13” Oak