AIRSTREAM

390/396
390 SKYDECK
XL

2005
Parts Book

2005 390/396/Sky Deck XL
TABLE of CONTENTS
SECTION I
A Through C

APPLIANCES

Air conditioner, Range I-1
Refrigerator, Microwave, Washer/Dryer I-2
Furnace I-3
Water heater I-4

EXTERIOR SHELL

Curbside wall, 390 ..... I-6
Curbside 390 Sky Deck I-8
Curbside Wall, 396 ..... I-10
Roadside Wall 390 Sky Deck I-12
Roadside wall, 390-396 ..... I-14
Roof Streamliner I-15
Slide out extrusion I-16
Slide out gasket I-17
Front end I-18
Aft end I-20
Roof I-22
Galley Slide Out Room I-23
Wardrobe Slide Out Room I-25

CHASSIS

Hitch/7-Way Bracket, Step, Generator tray I-27
Leveling Jacks, Generator Tray/Step Cover I-27
Mud flap, Fuel fill pipe, Auxiliary Airline Kit I-28
Tire valve extender I-28
Engine Cover I-29
Air conditioner I-30

2005 390/396/Sky Deck XL
TABLE of CONTENTS

SECTION II
D Through E

DASH II-1

DECALS II-2

DOORS/WINDOWS/AWNINGS

- Roadside, 390-396 ..... II-4
- Roadside 390 Sky Deck II-6
- Curbside 390 ..... II-8
- Curbside 390 Sky Deck II-10
- Curbside 396 ..... II-12
- Main/screen door II-14

DRAPES/BLINDS/VALANCES II-17

ELECTRICAL

- 110 volt II-21
- 12 volt chassis II-23
- 12 volt general II-25
- 12 volt armrest/dash switches/lens II-26
- 12 volt interior switches II-27
- 12 volt interior lights II-28
- 12 volt exterior lights II-29
- Exterior Mirror/Tank Monitor System II-30
- Keyless Entry/Solar Panel II-30
- Windshield wiper II-32

ENTERTAINMENT

- Monitor, back-up II-34
- Television II-35
- Radio/sound system II-36
- Satellite System II-37

2005 390/396/Sky Deck XL
TABLE of CONTENTS
SECTION III
F Through H

FASTENERS

Rivets III-1
Screws III-3

FLOOR COVERING

Carpet III-4
Tile III-4
Mats III-4

FURNITURE

Interior doors III-5
Mirrors III-8
Drawer faces/ boxes III-9
Lavatory III-11
Bedroom III-43
Galley III-71
Cab/Lounge III-113
Sky Deck Roof III-132

HARDWARE

Main/ screen door III-146
Lower compartments III-149
Slide out III-151
Interior hardware III-155
Safety Equipment III-158

LABELS/TAGS III-163

2005 390/396/Sky Deck XL
TABLE of CONTENTS

SECTION IV
L through Z

PLUMBING

LPG IV-1
Fresh water IV-2
Faucets IV-5
Utility compartment IV-9
Black/Grey Tanks IV-10
Showers/Sinks IV-10
Toilet IV-14

SEALS/SEALER

Gaskets IV-16
Sealer IV-19

UPHOLSTERY/FOAM/MATTRESSES

Mattress/Pillow Kits IV-20
Sofas/Chairs IV-21
Cab Seats IV-22

VENTS/FANS/SKYLIGHTS

Vents IV-23
Sky Lights IV-24

WOOD/WOOD TRIM

Paneling/Seam Tape/Wainscot IV-25
Molding IV-26

2005 390/396/Sky Deck XL

APPLIANCES

Air Conditioner

690323-33	Air conditioner, 13,500 Penquin
690323-32	Air conditioner, 13,500 BTU w/H. Pump CCC
690323-37	A/C, Brisk air, 15,000 BTU, w/ heat pump
690323-31	Comfort Control Center
690323-100	Shroud, exterior, Penquin
203069-01	Register, almond, 4” x 8”
690323-23	Cover, return grill
385582-01	Decal, Airstream w/bar, gray
690380-08	Sensor, dual air
690323-28	Bolt, cover kit
601611-02	DUCTING Y-CONNECTORS AC/HEAT
601611-01	DUCTING A/C-HEAT 2" X 7.5 "X 8' CEILING
601891	TUBING-PVC CLEAR 1” OD
511252	PLUG PHONE 4 CONDUCTOR
511378	CABLE THERMOSTAT 7 CONDUCTOR

Range

690396-10	COOKTOP-3 BURNER, S. S. TOP
690396-09	RANGE-22"W/OVEN S.S. TOP/DOOR
690396-03	Range cover, bi-fold
601911	Range Covers, Midnight
601911-01	Range Covers, Sandstone
601911-02	Range Covers, Everest
114876	Trim ring, range recess

Range, CSA

690434-03	Range w/oven, CSA, 21”
690434-02	Range Bi-fold Covers, range w/oven
601911	Range Covers, Midnight
601911-01	Range Covers, Sandstone
601911-02	Range Covers, Everest

2005 390/396/Sky Deck XL

APPLIANCES

Refrigerator, 10 CF

690494-03	REFER-10CF RH DR NDR1062RSSIMH
690494-05	REFER-10CF RH DR NDR1062RSSF, Sky Deck
500785	Outlet, duplex, brown
365190	SEAL RUBBER ADHESIVE 3/4"
690340-03	Door, refrigerator, exterior access, 10 cu. ft.
690259-03	Mounting flange, refrigerator exterior access
381207-03	Vent, roof, Dometic, polar white

Refrigerator, 12 CF

690494-07	REFER, 12CF, NDR1292SSIMH, OPTION
690391-01	Refer access door, exterior, 15” x 30”

Refrigerator Top Vent, Side x side option

690340-03	Door, refrigerator, exterior access, 10 cu. ft.
690259-03	Mounting flange, refrigerator exterior access
381207-03	Vent, roof, Dometic, polar white

Microwave

690503-01	Microwave, Amana, Convection, S.S

Washer/Dryer

690424-01	Washer/dryer combo, Splendide 2000S
386145	Vent kit
386062	Label, “Caution open window or vent”

2005 390/396/Sky Deck XL

APPLIANCES

Furnace

690274-02	Furnace, Hydro-flame, 16,000 BTU
690274	Furnace, Hydro-flame, #8535-IV, 34000BTU
690244-06	Mounting flange
690274-06	Door exterior, Hydro-flame
601244-02	Register, rotiare, white
601244-01	REGISTER-ROTAIRE #3840-96 4"BROWN
601751	DUCT-END P DOUBLE HOLE
601754	DUCT-END CAP TOP HOLE
601750-02	Duct, heat 108.75"
601752	TORPEDO BOOT- 2.25" X 10.00 X 4.0
601753	STACK BOOT-2.25" X 10.00" X 4.00"
203070	REGISTER PLASTIC BROWN 2"X10"
600247	4” duct hose, flexible
600526	FLANGE, 4 “
600193	2" DUCT THERMAFLEX FLEXIBLE AIR
601348	TEE, HEAT DUCT, 4 X 4 X 2
114079	ADAPTER-DUCT, 4.00" TO 2.00”
690431	VENT-2" INLET CLOSE ANGLE

Ice Maker

690480	Icemaker, U-Line, Sky Deck
801448-17	Icemaker door panel insert, 12.94” x 13.47”

2005 390/396/Sky Deck XL

APPLIANCES

Water Heater

690417-04	WATER HEATER, 10 GALLON DSI/110V
690417-05	SWITCH-DUAL WATER HEATER
690417-02	Access cover, white
690417-03	Mounting flange, white, 10gal.
381648	Latch hole cover
385988	Decal, water heater

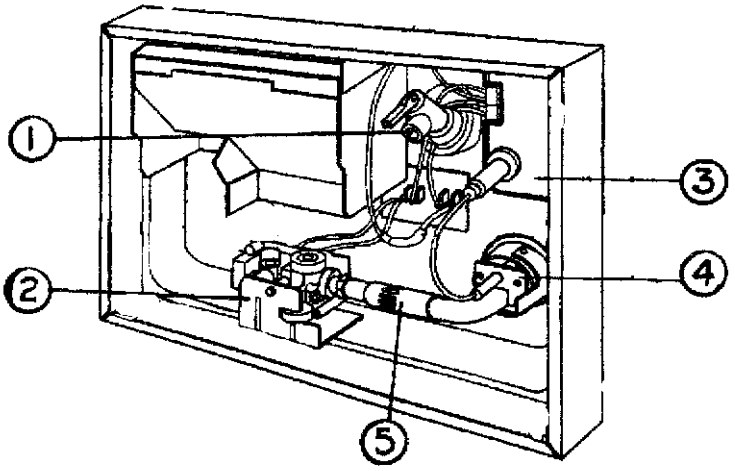

1. 091604	Relief valve, pressure/temperature
2. 093870	Solenoid valve
3. 093865	Circuit board
4. 093868	Spark probe
5. 093221	Main burner
091160	Heating element, 110volt
091873	ECO thermostat, 110 volt
091092	On/off switch, 110Volt

2005 390/396/Sky Deck XL

EXTERIOR SHELL

Wall, Curbside, 390

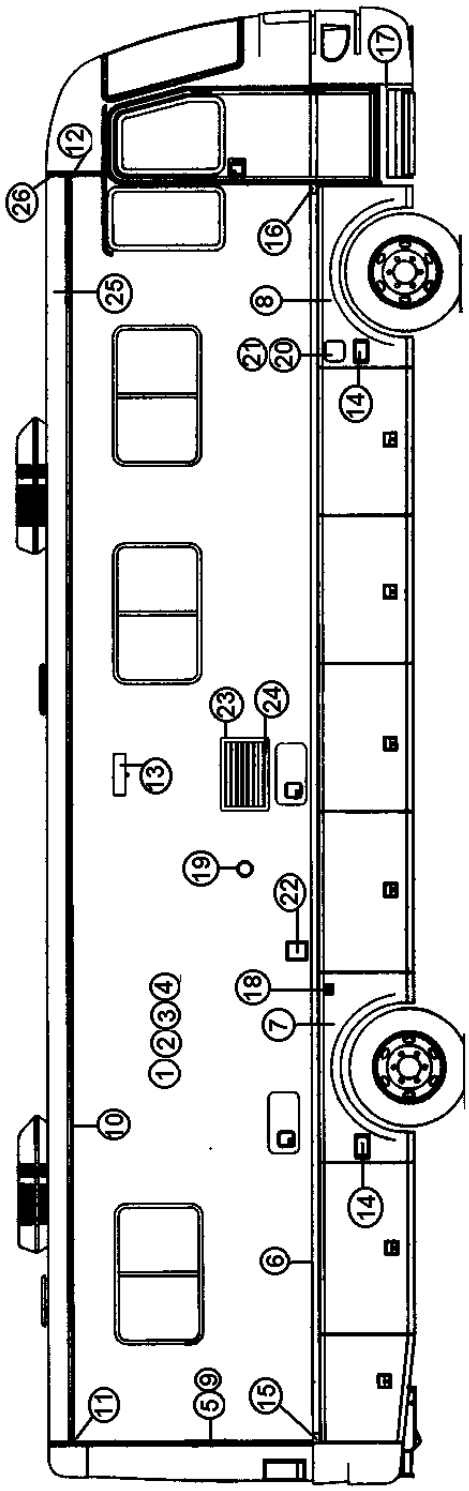

See next page for P/N

2005 390/396/Sky Deck XL

EXTERIOR SHELL

Wall, Curbside, 390

1. 801002-17	Sheet fiberglass, White, 77.5 x 435”
2. 801505	Panel, Ascot Sand/Raw, .125" X 4' X 8'
3. 203075	Styrofoam sheet, 1 1/2”
4. 915506	Weldment, C/S wall, XL 390
5. 114862-01	Extrusion, end cap trim
6. 114865	Extrusion, rub rail
7. 203211	Fender, C/S rear
8. 203213	Fender, C/S front w/fill
9. 320124-06	Screw, #6 x 1”, stainless steel, white
10. 114570	Extrusion, awning rail
11. 386093	Awning rail cap, LH
12. 386094	Awning rail cap, RH
13. 511509	Light, entrance door, fluorescent
14. 201991	Docking light housing
15. 114914-02	Cap, end, rub rail extrusion, LH
16. 114914-01	Cap, end, rub rail extrusion, RH
17. 203215	Panel, step skirt
18. 510984-02	Light, side marker, amber
18. 381396	GASKET, CLEARANCE LIGHT
19. 386145	VENT KIT -DRYER PAINTABLE
20. 203047	Bezel, fuel fill
21. 381641	Door, fuel fill access
22. 601194-03	Water fill
23. 690340-03	Door, refrigerator, exterior access
24. 690259-03	Flange, refrigerator access door
25. 114568	Extrusion roof corner cap
26. 114862-01	Extrusion end cap

2005 390/396/Sky Deck XL

EXTERIOR SHELL

Wall, Curbside 390 Sky Deck

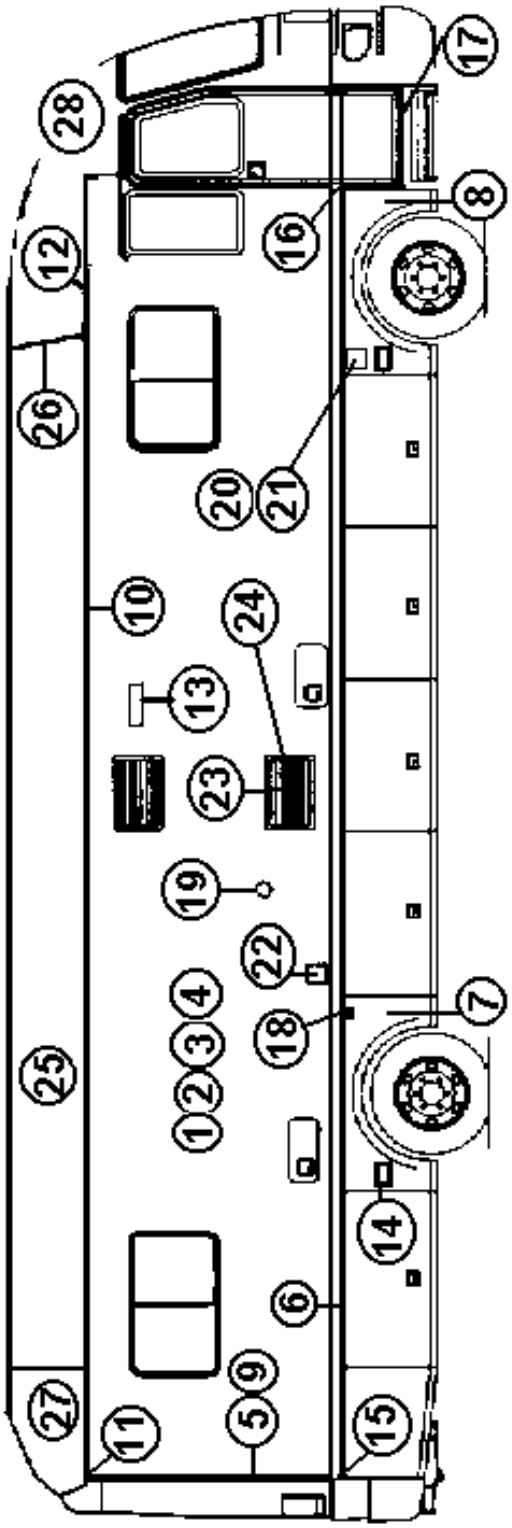

2005 390/396/Sky Deck XL

EXTERIOR SHELL

Wall, Curbside 390 Sky Deck

1. 801002-17	Sheet fiberglass, White, 77.5 x 435”
2. 801505	Panel, Ascot Sand/Raw, .125" X 4' X 8'
3. 203075	Styrofoam sheet, 1 1/2”
4. 915506	Weldment, C/S wall, XL 390
5. 114862-01	Extrusion, end cap trim
6. 114865	Extrusion, rub rail
7. 203211	Fender, C/S rear
8. 203213	Fender, C/S front w/fill
9. 320124-06	Screw, #6 x 1”, stainless steel, white
10. 114570	Extrusion, awning rail
11. 386093	Awning rail cap, LH
12. 386094	Awning rail cap, RH
13. 511509	Light, entrance door, fluorescent
14. 511101-01	Docking light, stainless steel
15. 114914-02	Cap, end, rub rail extrusion, LH
16. 114914-01	Cap, end, rub rail extrusion, RH
17. 203215	Panel, step skirt
18. 510984-02	Light, side marker, amber
18. 381396	GASKET, CLEARANCE LIGHT
19. 386145	VENT KIT -DRYER PAINTABLE
20. 203047	Bezel, fuel fill
21. 381641	Door, fuel fill access
22. 601194-03	Water fill
24. 690259-03	Flange, refrigerator exterior access door
25. 801444-04	SHEET-FIBERGLASS SG#200 FR WHITE
26. 114862-01	Extrusion end cap
27. 203438	COWLING-REAR
28. 203437	COWLING-FRONT

2005 390/396/Sky Deck XL

EXTERIOR SHELL

Wall, Curbside, 396

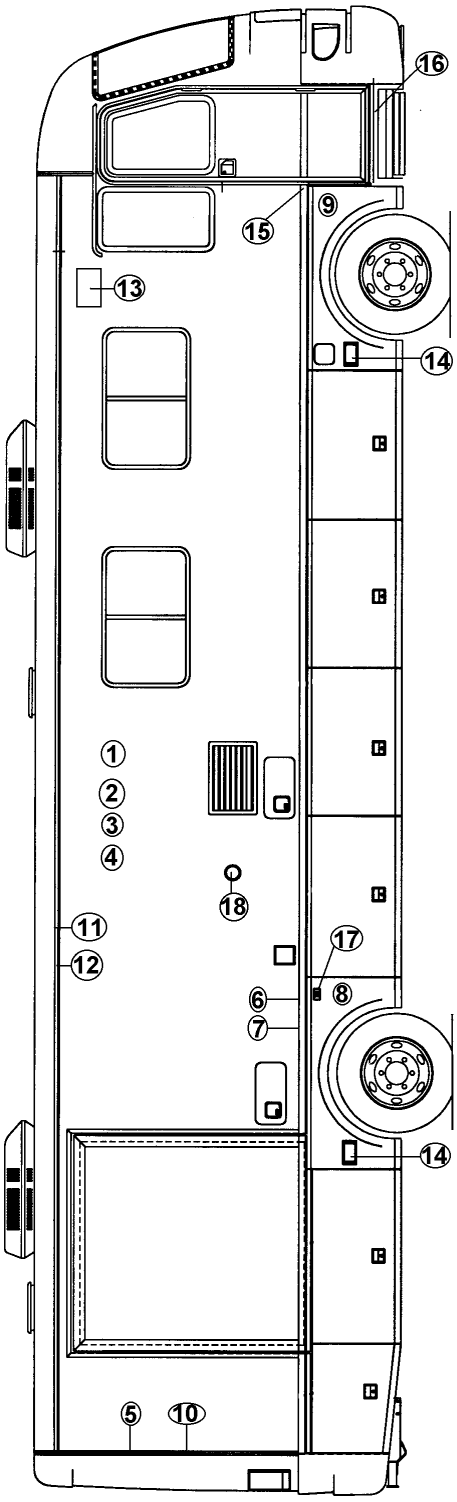

2005 390/396/Sky Deck XL

EXTERIOR SHELL

Wall, Curbside, 396

1. 801002-17	Sheet fiberglass, White, 77.5 x 435”
2.. 801505	Panel, Ascot Sand/Raw, .125" X 4' X 8'
3. 203075	Styrofoam sheet, 1 1/2”
4. 915636	Weldment, C/S wall
5. 114862-01	Extrusion, end cap trim
6. 114865	Extrusion, rub rail
7. 114865	Extrusion, rub rail
8. 203211	Fender, C/S rear
9. 203213	Fender, C/S front w/fill
10. 320124-06	Screw, #6 x 1”, stainless steel, white
11. 114570	Extrusion, awning rail
11. 386093	Awning rail cap, LH
11. 386094	Awning rail cap, RH
12. 114568	Extrusion, roof corner cap
13. 511509	Light, entrance door, fluorescent
14. 511101-01	Docking light, stainless steel
15. 114914-02	Cap, end, rub rail extrusion, LH
15. 114914-01	Cap, end, rub rail extrusion, RH
16. 203215	Panel, step skirt
17. 510984-02	Light, side marker, amber
17. 381396	GASKET, CLEARANCE LIGHT
18. 386145	VENT KIT -DRYER PAINTABLE
386068	Medallion, 3” black

2005 390/396/Sky Deck XL

EXTERIOR SHELL

Wall, Roadside 390 Sky Deck

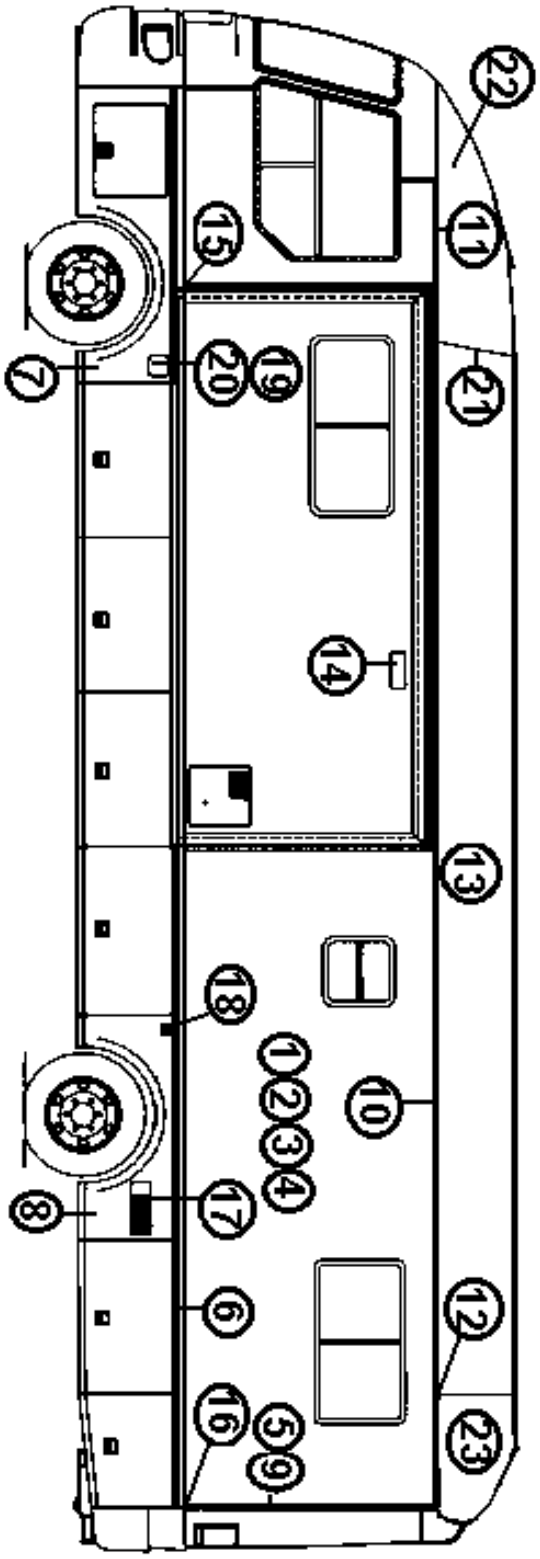

2005 390/396/Sky Deck XL

EXTERIOR SHELL

Wall, Roadside 390 Sky Deck

1. 801002-17	Sheet fiberglass, White, 77.5 x 435”
2. 801505	Panel, Ascot Sand/Raw, .125" X 4' X 8'
3. 203075	Styrofoam sheet, 1 1/2”
4. 915507	Weldment, R/S wall, XL 390
5. 114862-01	Extrusion, end cap trim
6. 114865	Extrusion, rub rail
7. 203214	Fender, R/S front w/fill & door
8. 203212	Fender, R/S rear w/intake
9. 320124-06	Screw, #6 x 1”, stainless steel, white
10. 114570	Extrusion, awning rail
11. 386093	Awning rail cap, LH
12. 386094	Awning rail cap, RH
13. 801444-04	SHEET-FIBERGLASS SG#200 FR WHITE
14. 511017-02	Vent cover, exterior, range exhaust
15. 114917-01	Cap, end, rub rail, RH, at slide out
16. 114917-02	Cap, end, rub rail, LH, at slide out
17. 453754	Screen, air intake
18. 510984-02	Light, side marker, amber
18. 381396	GASKET, CLEARANCE LIGHT
19. 203047	Bezel, fuel fill
20. 381641	Door, fuel fill access
21. 114862-01	Extrusion end cap
22. 203437	COWLING-FRONT
23. 203438	COWLING-REAR

2005 390/396/Sky Deck XL

EXTERIOR SHELL

Wall, Roadside, 390/396

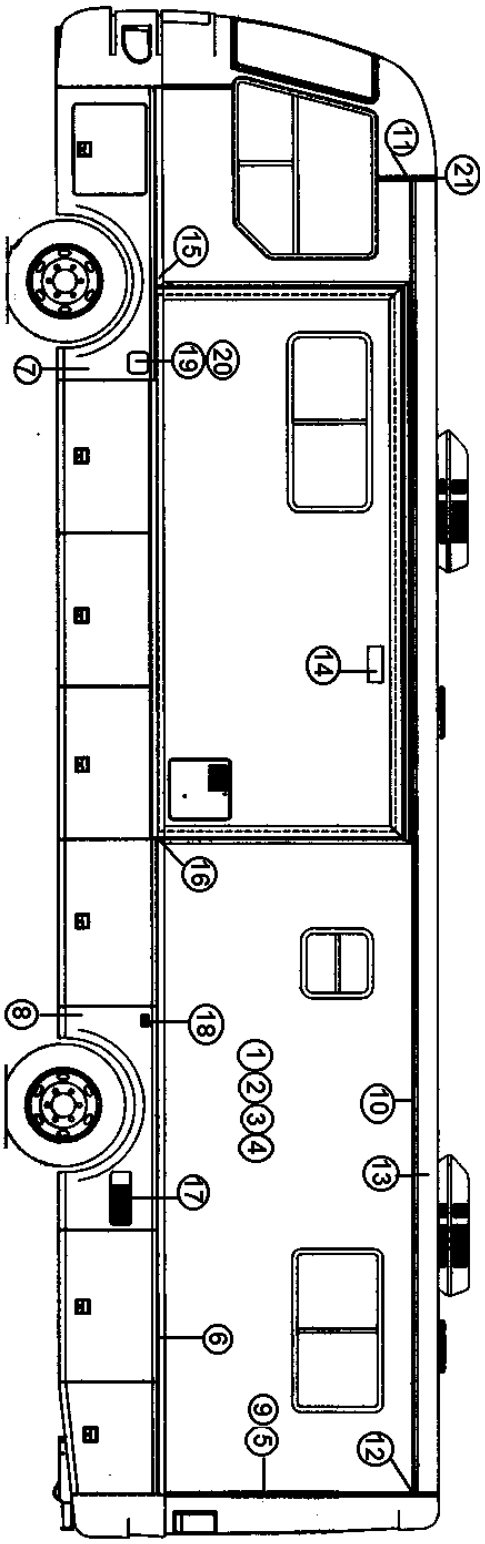

See next page for P/N

2005 390/396/Sky Deck XL

EXTERIOR SHELL

Wall, Roadside, 390/396

1. 801002-17	Sheet fiberglass, Frost, 77.5” x 435”
2. 801505	Panel, Ascot Sand/Raw, .125" X 4' X 8’
3. 203075	Styrofoam sheet, 1 ½”
4. 915507	Weldment, R/S wall, XL 390
5. 114862-01	Extrusion, end cap trim
6. 114865	Extrusion, rub rail
7. 203214	Fender, R/S front w/fill & door
8. 203212	Fender, R/S rear w/intake
9. 320124-06	Screw, #6 x 1”, stainless steel, white
10. 114570	Extrusion, awning rail
11. 386093	Awning rail cap, LH
12. 386094	Awning rail cap, RH
13. 114568	Extrusion, roof corner cap
14. 511017-02	Vent cover, exterior, range exhaust
15. 114917-01	Cap, end, rub rail, RH, at slide out
16. 114917-02	Cap, end, rub rail, LH, at slide out
17. 453754	Screen, air intake
18. 510984-02	Light, side marker, amber
18. 381396	GASKET, CLEARANCE LIGHT
19. 203047	Bezel, fuel fill
20. 381641	Door, fuel fill access
21. 114862-01	Extrusion end cap

2005 390/396/Sky Deck XL

EXTERIOR SHELL

Roof Streamliner, Sky Deck

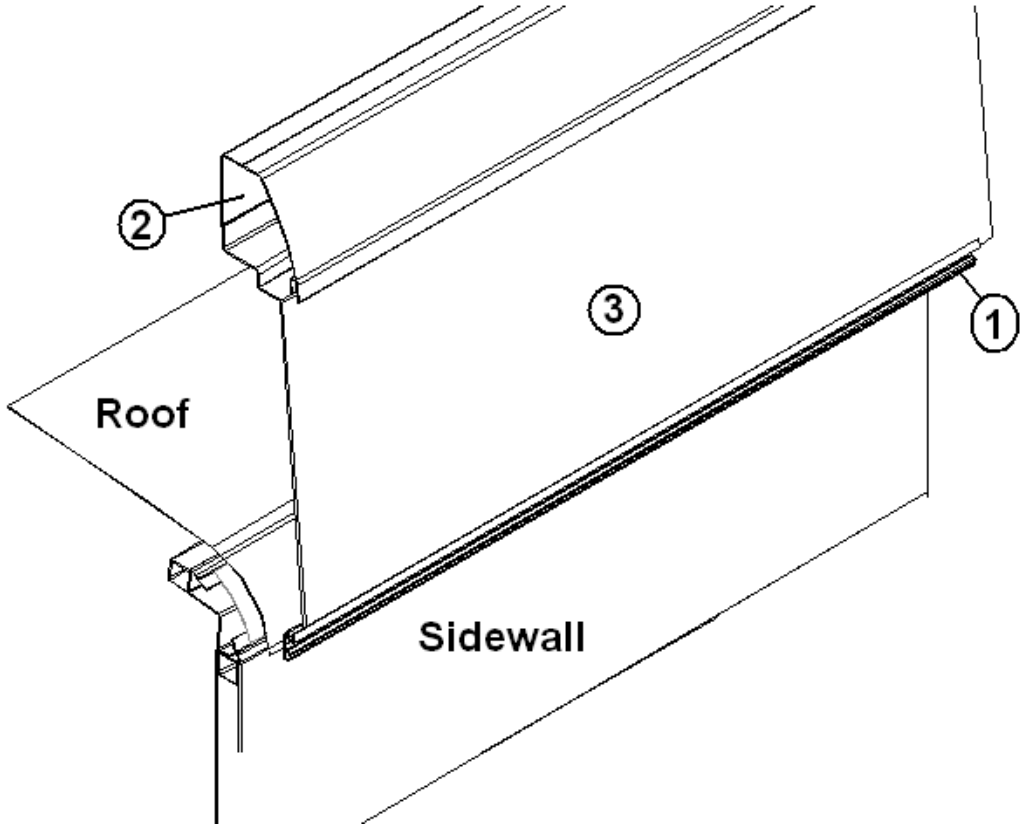

1. 115132	EXTRUSION, AWNING RAIL
2. 115133	EXTRUSION, STREAMLINER CAP
3. 801444-04	SHEET-FIBERGLASS, FROST WHITE
360180	ADHESIVE SEAL SIKAFLEX
203437	COWLING-FRONT
203438	COWLING-REAR

2005 390/396/Sky Deck XL

EXTERIOR SHELL

Slide-out Extrusion

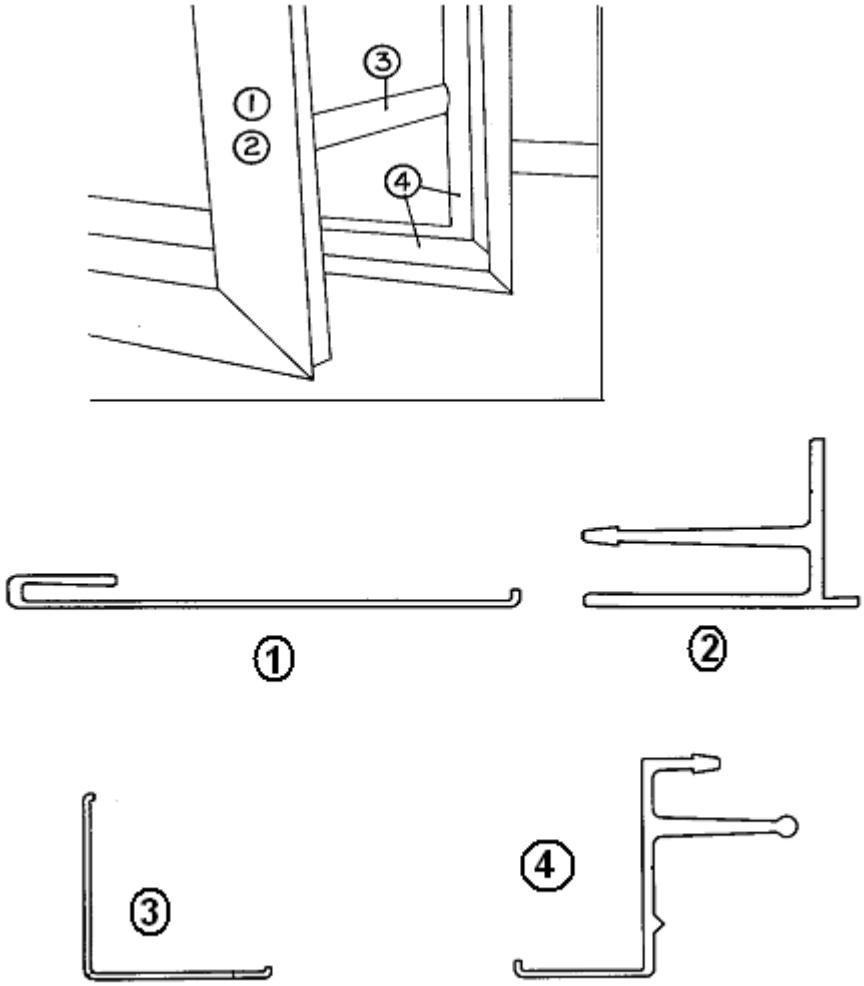

1. 114771	Extrusion, slide out
2. 114770	Extrusion, slide, trim out box(fits behind 1.
3. 114768	Extrusion, slide out
4.114726	Extrusion, slide corner trim out frame

Item 1 is slotted to allow adjustment to the sidewall Cutout. Fitting will be required.

2005 390/396/Sky Deck XL

EXTERIOR SHELL

Slide Out Gaskets

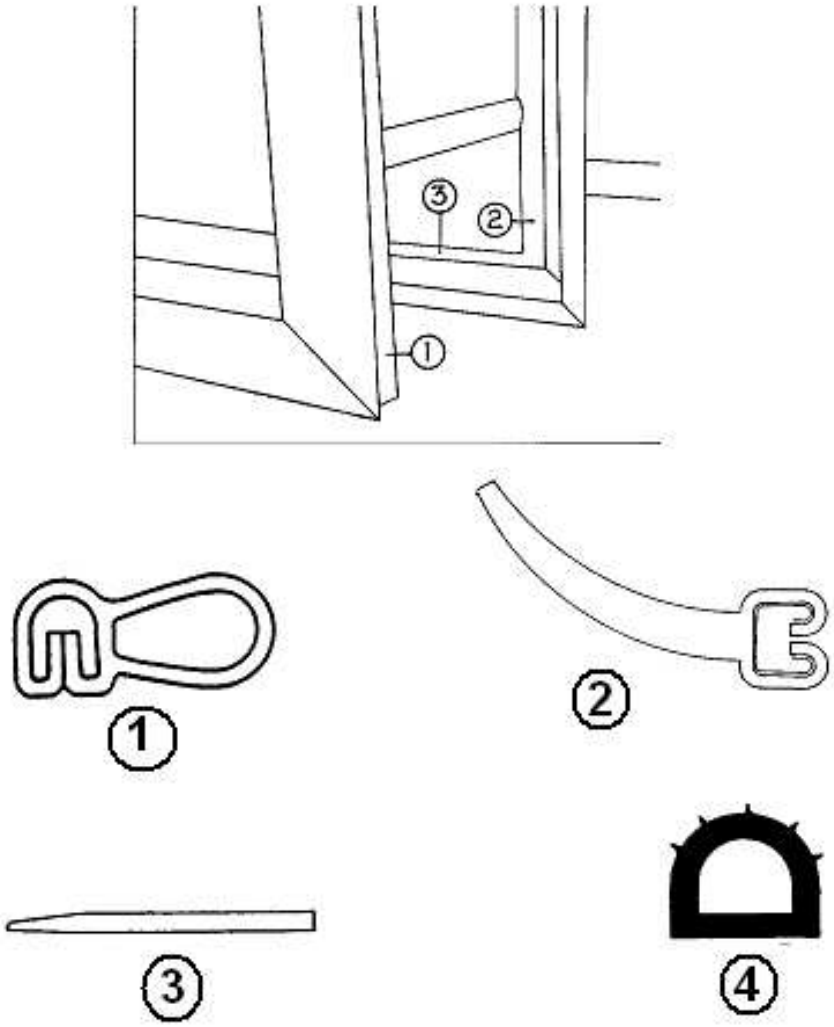

1. 381594 Rubber extrusion Bulb type, black
2. 381587 Rubber extrusion wiper
3. 381589 Rubber extrusion floor wiper
4. 381663 Rubber extrusion bulb

2005 390/396/Sky Deck XL

EXTERIOR SHELL

Front End

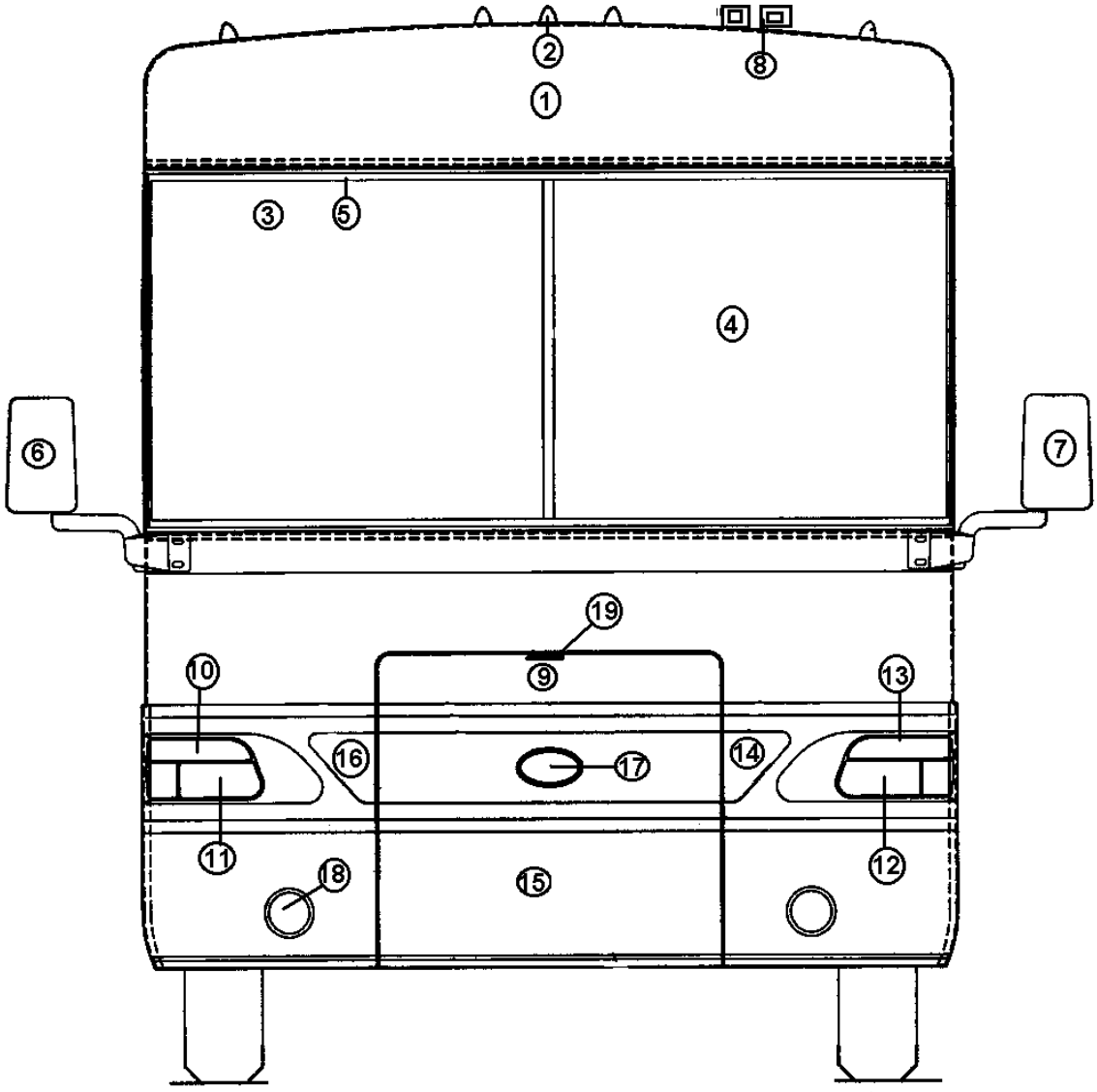

See next page for P/N

2005 390/396/Sky Deck XL

EXTERIOR SHELL

Front End

1. 203231	Front nose/cap, XL diesel
2. 511400	Light clearance, tear drop, amber
3. 371370	Windshield, C/S
4. 371369	Windshield, R/S
5. 381640	Gasket, windshields
6. 511512-02	Mirror, cab, black, C/S
7. 511512-01	Mirror, cab, black, R/S
8. 510804	Horn, air, chrome
8. 510804-01	Elbow kit, air horns
9. 203232	Access cover, generator, fiberglass
10. 511398-02	Parking light/turn signal C/S
11. 511397-02	Head light, C/S
12. 511397-01	Head light, R/S
13. 511398-01	Parking light/turn signal, R/S
14. 453773-01	Panel, nose, stainless steel, R/S
15. 453773-03	Panel, nose, stainless steel, center
16. 453773-02	Panel, nose, stainless steel, C/S
17. 386043-03	Medallion, AIRSTREAM, black
18. 511879	Fog light, clear, round
19. 381702-01	Handle, Non-Locking generator door
511399	BRKT-HEADER PANEL FORD #8190A
381652	RETAINER-PARK LAMP, FORD
104315	BRACKET, FRONT LICENSE PLATE, MH.

2005 390/396/Sky Deck XL

EXTERIOR SHELL

Aft End

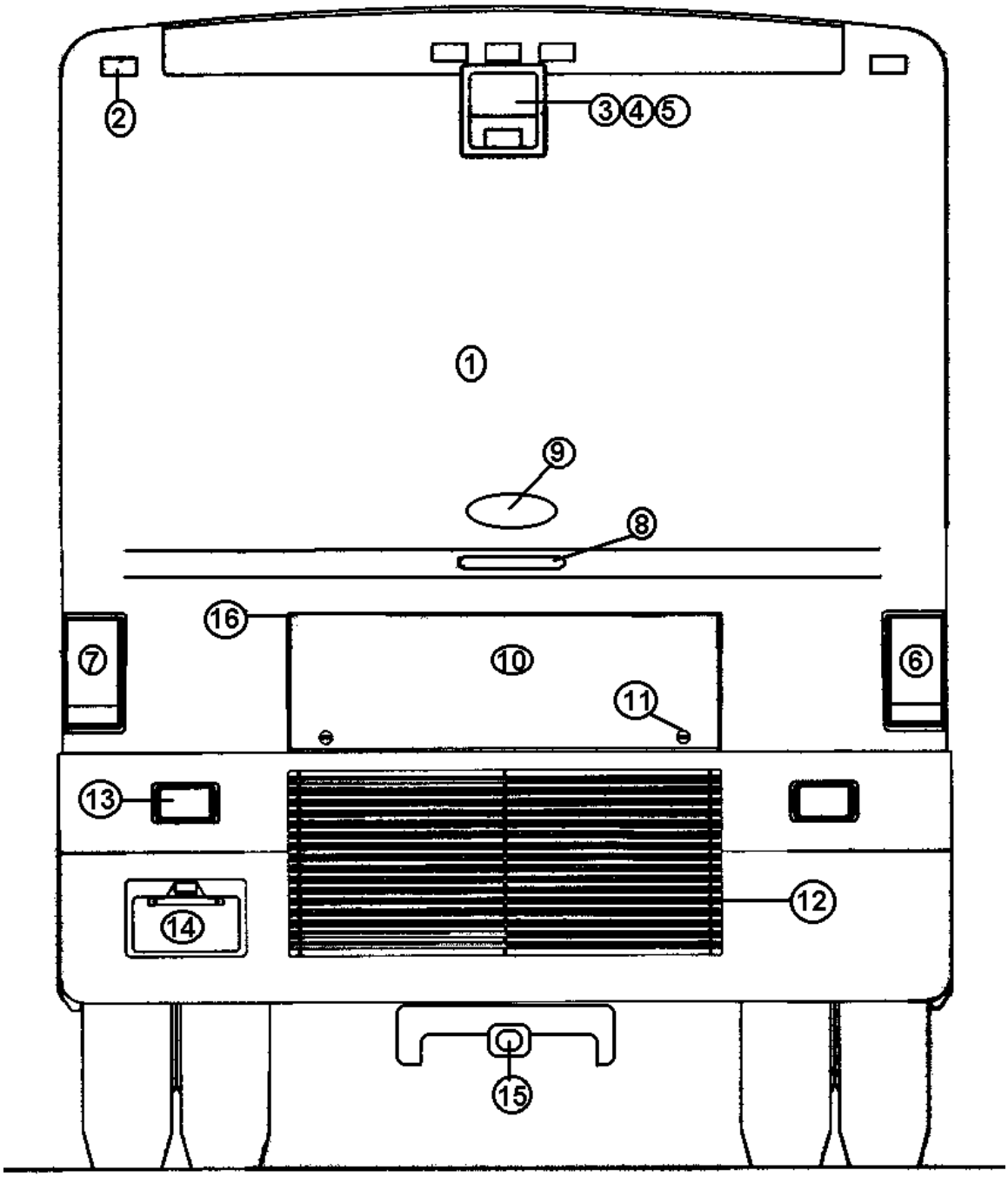

See next page for P/N

2005 390/396/Sky Deck XL

EXTERIOR SHELL

Aft End

1. 203216-01	Rear cap, XL diesel
2. 510984-01	Light clearance, red
2. 381396	GASKET, CLEARANCE LIGHT
3. 511642	Monitor, Weldex
4. 203181	Cover, back up camera
5. 511044-03	Actuator, two position, push/pull
6. 511589-01	Tail light assembly, R/S
7. 511589-02	Tail light assembly, C/S
7. 511584	Socket, turn signal, Ford
7. 511585	Socket, Stop/tail light, Ford
7. 511586	Socket, Back-up light, Ford
7. 511587	Bulb, 3357, stop/tail
7. 511588	Bulb, 3156, turn/back-up
8. 511154-02	Light strip, 3rd brake
9. 386043-03	Medallion, AIRSTREAM, black
10. 922742	Door, rear access, louvered
11. 381227-01	Latch, vise-action, curved pawl
12. 922538	Louver assembly, rear
13. 511101-01	Docking light, stainless steel
14. 511407	License plate light w/holder
15. 400968	Hitch, Reese, 10,000lbs.
16. 381434	HINGE, S.S., 3 X 3
381639-01	Ladder, rear roof

2005 390/396/Sky Deck XL

EXTERIOR SHELL

Roof

203379	Fiberglass sheet, roof, 106”wide, smooth
114739-04	Extrusion, roof/wall attachment
114570	Extrusion, awning rail
386093	Awning rail cap, LH
386094	Awning rail cap, RH
114532-02	Bow, roof, two hole
114532-06	BOW-ROOF 3-HOLE
114532-05	BOW-ROOF 4-HOLE
702992	Headliner, ceiling vinyl, Petra Cuddy
*702992-02	Headliner, Neutral
800507-01	Paneling, luan, ceiling liner backing
201728-01	Extrusion, ceiling trim retainer
201728-05	Extrusion, ceilings trim
601698-12	E-PEX 3/4 TUBING
330139-01	RIVET MAGNALOK SS 1/4"GR.080-.
330134	RIVET, COUNTER SUNK, OLYMPIC RV6
601611-02	DUCTING Y-CONNECTORS AC/HEAT C
601611-01	DUCTING A/C-HEAT 2" X 7.5" X 8' CEILING

*Replace 702992 during model year PCN 5130. One roll sent to service 5/11/05

2005 390/396/Sky Deck XL

EXTERIOR SHELL

Galley Slide out Room

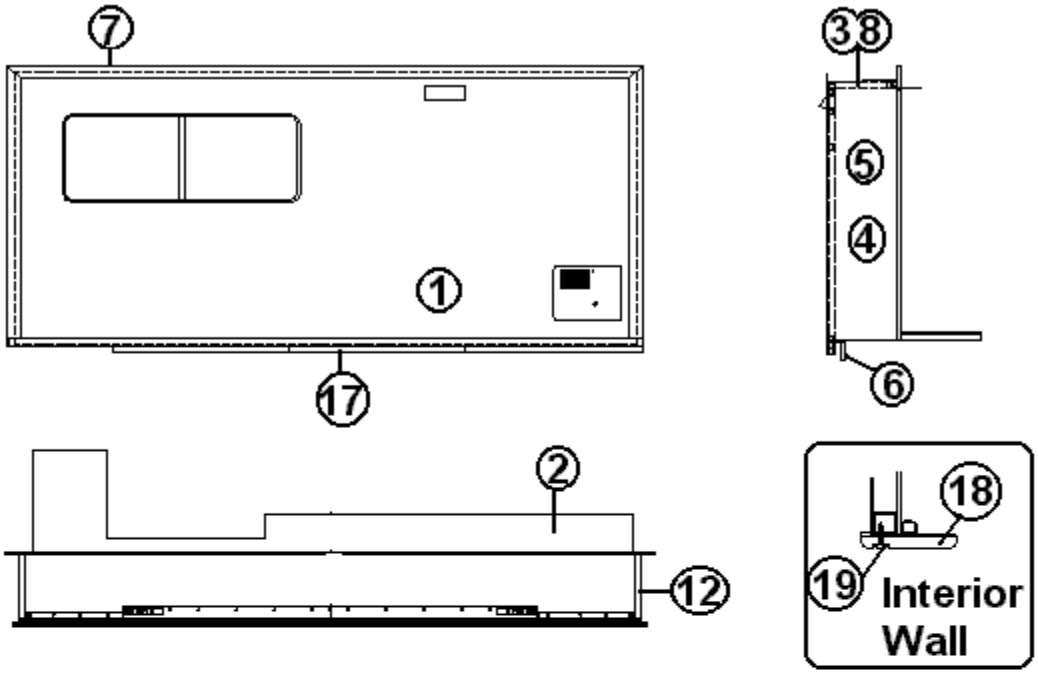

2005 390/396/Sky Deck XL

EXTERIOR SHELL

Galley Slide out Room

1. 964794	WALL ASSY-MAIN GALLEY S/O
2. 964793	FLOOR ASSY-GALLEY S/O
3. 964795	ROOF ASSY-GALLEY SLIDE XL
4. 964917-01	AFT WALL ASSY-S/O
5. 964917-02	FWD WALL ASSY-S/O
6. 914326	ANGLE-FLOOR MOUNTING SLIDE OUT
7. 381709	TRAVEL LOCK- 18.5"
8. 114839-02	ROOF WRAP-S/O ROOM 164"
9. 114770	EXTRUSION, SLIDE OUT BOX
10. 114771	EXTRUSION, SLIDE OUT TRIM
11.114726	EXTRUSION - SLIDE OUT FRAME
12.114768	EXTRUSION SLIDE OUT CORNER TRIM
13.381594	RUBBER EXTRUSION BULB BLACK
14.381587	RUBBER EXTRUSION, WIPER
15.381663	GASKET D-SEAL EPDM SPONGE SD-2
16.381589	RUBBER EXTRUSION, FLOOR WIPER
17.114970	TRIM SLIDE-OUT LOWER
18. 964902-006	FACIA, 5 1/2 X 73 W/GROOVE, Oak
18. 964902-003	FACIA, 5 1/2 X 73 W/GROOVE, Hickory
19.800572-016	MOLDIN EDGE 23/32 X 80 Oak
19. 800572-016	MOLDING EDGE 23/32 X 80 Hickory
801505	Panel, Ascot Sand/Raw, .125" X 4' X 8'
114816	DRAIN PAN SLIDE OUT ROOM
385946	WARNING LABEL SLIDE OUT OPERATION
381623	ROLLER FLOOR SLIDE-OUT
453703	CLOSE OUT, SLIDE MECHANISM
381730	FELT PAD, SELF ADHESIVE 1.5"

2005 390/396/Sky Deck XL

EXTERIOR SHELL

Wardrobe Slide Out Room

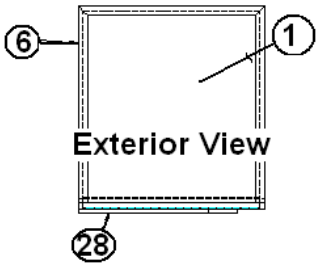

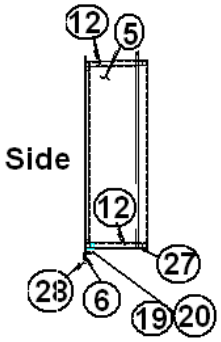

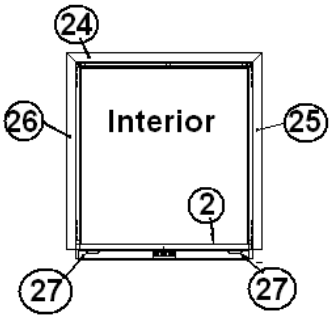

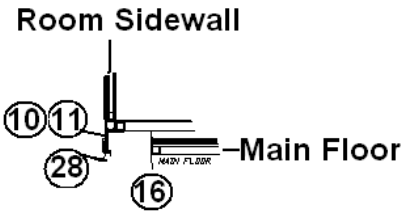

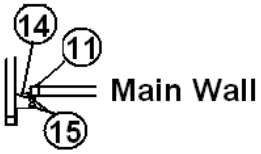

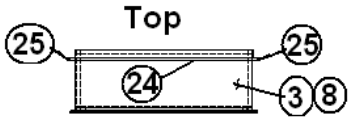

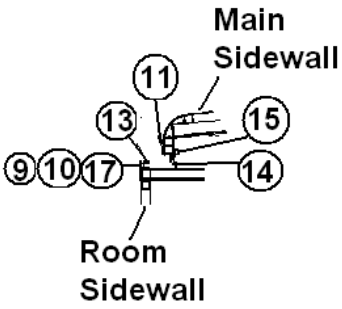

SEE NEXT PAGE FOR P/N

2005 390/396/Sky Deck XL

EXTERIOR SHELL

Wardrobe Slide Out Room

1. 965307	Main wall assembly WDRB slide, XL
2. 965309	Floor assembly, slide-out, XL
3. 965308	Roof assembly, WDRB S/O
4. 965306-01	Wall assembly, aft S/O, XL
5. 965306-02	Wall assembly, aft S/O, 369 XL
6. 965299	Assembly, S/O WDRB mounting angle
7. 381709	Travel-bar, 18.50”
8. 114851-02	Roof wrap, bedroom, wardrobe slide out
9. 114770	Extrusion, slide-out box
10. 114771	Extrusion, slide-out trim
11. 114726	Extrusion, slide-out trim
12. 114768	Extrusion, slide-out corner trim
13. 381594	Rubber extrusion, bulb
14. 381587	Rubber extrusion, wiper
15. 381588	Rubber extrusion, bulb with tape
16. 381589	Rubber extrusion, floor wiper
17. 365235	Tape a double coated, .12 x 1.00
18. 114816	Drain pan, slide out-room
19. 345406	Carriage bolt, 3/8-16 x 1 ¼” long
20. 350170	Nut, 3/8-16
21. 330139-01	Rivet Magnalok, stainless steel, 1/4 inch, GR .080-.375
22. 330139-02	Rivets Magnalok, stainless steel 1/4 inch, GR.350-.625
23. 385946	Warning label, slide operation
24. 453925	Interior seal wardrobe, top
25. 453926-02	Interior seal wardrobe, right hand side
26. 453926-01	Interior seal wardrobe, left-hand side
27. 381623	Roller floor, slide-out
28. 114970	Trim, lower slide-out

702482 HEADLINER SPECTRA OPAL X

2005 390/396/Sky Deck XL

CHASSIS

Hitch/7-Way Bracket

400968	Reese hitch, 390 Series, XL, 10,000, Lbs
913938	BRACKET ASSEMBLY, 7 WAY PLUG

Leveling Jacks

410871-02	Jack kit complete, Power Gear
510914	TERMINAL, RELAY BLOCK
510844-01	Relay, Bosch
510844-02	Socket, Bosch relay

Entrance Step

511485	Step, double, electric, Kwikee #903206
511485-01	PLUG, STEP KWIKEE
511486	Switch, magnetic, round, black, in doorjamb
511022-100	Motor, double step
511485-100	Control box, main, black, Kwikee #909506

Generator Tray

381733	Tray, generator S/O
381456	CABLE COATED
381455	LOOP SLEEVE, STAINLESS STEEL
310028	LYNCH PIN, 1/4" PIN

Step Cover

381697	Step cover, sliding
381697-01	Air kit complete, sliding step
114973	Stair trim, black plastic extrusion

2005 390/396/Sky Deck XL

CHASSIS

Mud Flaps/Splash Guard/Tire Valve

921197-01	Mud flap assembly, roadside, notched
921197-02	Mud flap assembly, curbside, notched
921197-03	Mud flap assembly, roadside
203229	Splash guard, only
451811	Extender, tire valve, pr.

Rock Guard, Rear, w/Brite Insert

110723	Rear mud flap assy. w/logo
453919-01	Bracket, mud flap RS
453919-02	Bracket, mud flap, CS
453920	Spacer, Rear Mud Flap

Fuel Fill/Tire Valve Extender

410773	Hose, fuel fill 2" I.D.
410838	Pipe, 'S' fuel fill, 2.0”
6000326	Hose, fuel fill vent, .625" I.D. x 36”
203047	Bezel, fuel fill
451811	Extender, tire valve, pr.

Auxiliary Air Line Kit

381179	HOSE, COILED, AIR 50 FT.
381180	COUPLER, AIR HOSE, MALE #5139-11
381181	AIR CHUCK, DUAL FOOT, #401
381182	TIRE GAUGE, DUAL FOOT, #8102A
410821	VALVE TUBELESS CLAMP IN TR416

Cloth Covering

702754	Under belly cloth, Darco, 105” wide, black

Engine Cover

203265	Engine cover base, fiberglass, 390/396
203266	Engine coverlid, fiberglass
365263	Gasket, engine cover
381735	Latch, engine cover lid, non locking
381735-01	Gasket, engine cover latch
203276	INSULATOR, ENGINE COVER
203277	INSULATOR, SOUND, BED LINER
453881	BRACKET-PADDLE LATCH, ENGINE COVER
381434	HINGE, S.S., 3 X 3, ENGINE COVER
380509	MAIN DOOR HOLDBACK (ENGINE COVER)
965273-01	COVER WIRE RUN BED ENGINE BOX

Day Light Running Lights

511561	MODULE - DAYTIME RUNNING LIGHT

2005 390/396/Sky Deck XL

CHASSIS

Dash A/C, Heater

690496-00	DASH AIR CONDITIONER/HEATER
601556	HOSE AC #6 5/16
601557	HOSE AC #8 13/32
601558	HOSE AC #12 5/8
690429	LOUVER-2" BLACK ROUND
601599	HOSE DUCT 2"
203458	DEFROSTER TRANSITION DUCT
601720-03	FITTING #8X8 F-OR BEAD LOCK
601720-04	FITTING #10X12 F-OR BEAD LOCK
690461	DEFROST BOX 4 HOLE BLACK
511112	PUMP VACUUM #4570568

SERVICE PARTS SCS has requested you to call them on the 800 number listed above should you experience any service problems. They are usually able to help get any repairs needed at an air conditioner repair facility close to your location.

The following pages include wiring diagrams and vacuum line diagrams.

Specific Climate Systems Inc.
1200 West Risinger Road
Fort Worth, Texas
Technical Assistance: 1-800-275-7524

2005 390/396/Sky Deck XL

DASH

Dash Parts

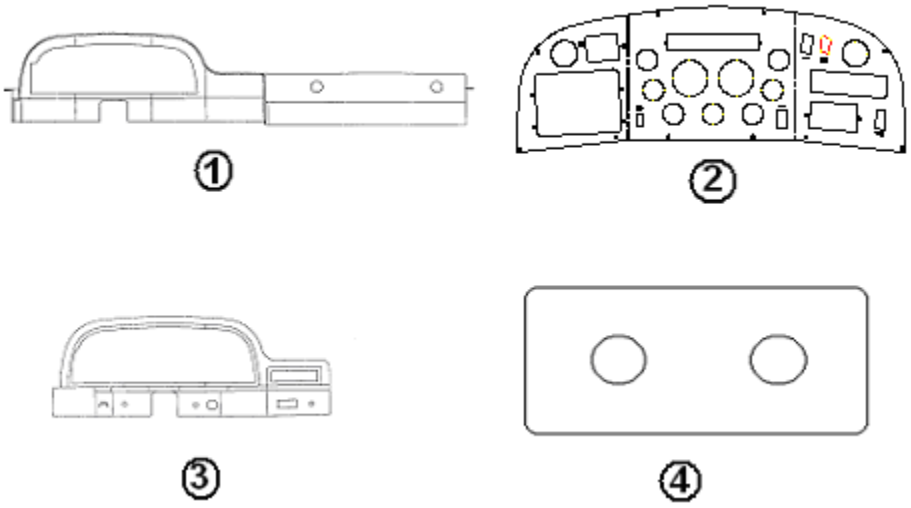

1)	203247-01	Dash, vinyl wrapped
2)	511821	Panel, dash cluster, black
3)	203248-01	Trim ring, I.P. vinyl
4)	511819	Panel. Center console
	690459	ROTAIRE VENT, 2.5" BLACK
	690458	LOUVER VENT, 2.0" ROUND, BLACK
	114958	BRACKET, DASH LH SUPPORT
	114957	BRACKET, DASH RH SUPPORT
	510914	TERMINAL, RELAY BLOCK
	510844-01	Relay, Bosch
	510844-02	Socket, Bosch relay
	511112	Vacuum pump

2005 390/396/Sky Deck XL

DECALS

Decals, Exterior

365274	Decal, "Roof Patio", Sky Deck
365275	Decal, Sky Deck Sunburst
365276	Tape, reflective, yellow/black

Decals, Interior

386034	Decal, "AIRSTREAM", 7.5"
386033	Decal, "LAND YACHT", 7.5"
385582-01	DECAL AIRSTREAM W/BAR, ROOF A/C

2005 390/396/Sky Deck XL

DOORS/WINDOWS/AWNINGS

Roadside Wall, 390-396

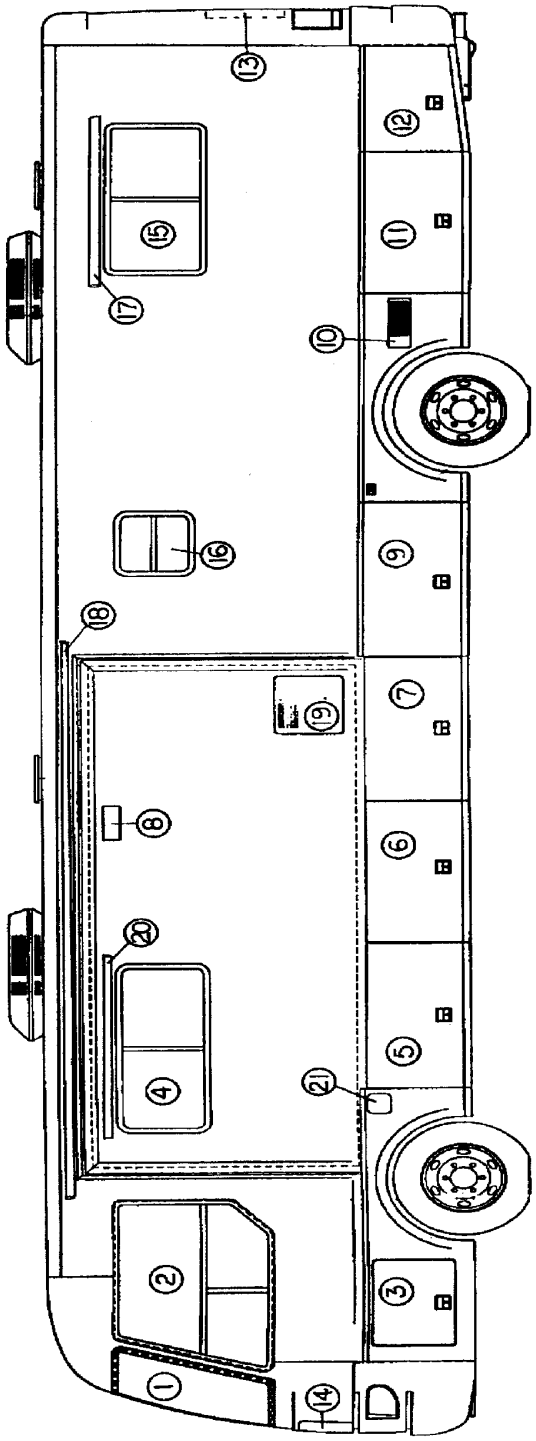

See next page for P/N

2005 390/396/Sky Deck XL

DOORS/WINDOWS/AWNINGS

Roadside Wall, 390-396

1. 371369	Windshield, R/S
2. 371382-01	Cab window, R/S
3. 922561	Door assembly, front fender access
3. 203218	Door only, front fender access
4. 371366-25	Window, R/S horizontal slider, 22 x 43”
5. 921196	Door, compartment, 46.69,short (under slide out)
6. 921196	Door, compartment, 46.69,short (under Slide-out)
7. 921196	Door, compartment, 46.69,short (under Slide out)
8. 511017-02	Vent cover, exterior, range exhaust
9. 921190	Door, compartment, 50.75”
10. 453754	Screen, air intake
11. 921191	Door, compartment, 46.25”
12. 921193	Door, compartment, R/S, angled, 34”
13. 922742	Door, rear access
14. 203232	Access cover, generator, fiberglass
15. 371366-24	Window, R/S horizontal slide w/egress 26 x 43”
16. 371366-28	Tinted slider
17. 702679-61	Awning, window, 4’ Charcoal Tweed
17.702679-12	HARDWARE AWNING WINDOW, SATIN
18. 702949-05	Cover, galley slide out
18. 702949-01	Cover, galley slide, hardware
19. 690417-02	Door, water heater access
19. 690417-03	Flange, water heater mounting
20. 702679-61	Awning, window, 4’ Charcoal Tweed
20. 702679-12	Hardware, awning window, Satin
21. 381641	Door, fuel fill access

2005 390/396/Sky Deck XL

DOORS/WINDOWS/AWNINGS

Roadside Wall, 390 Sky Deck

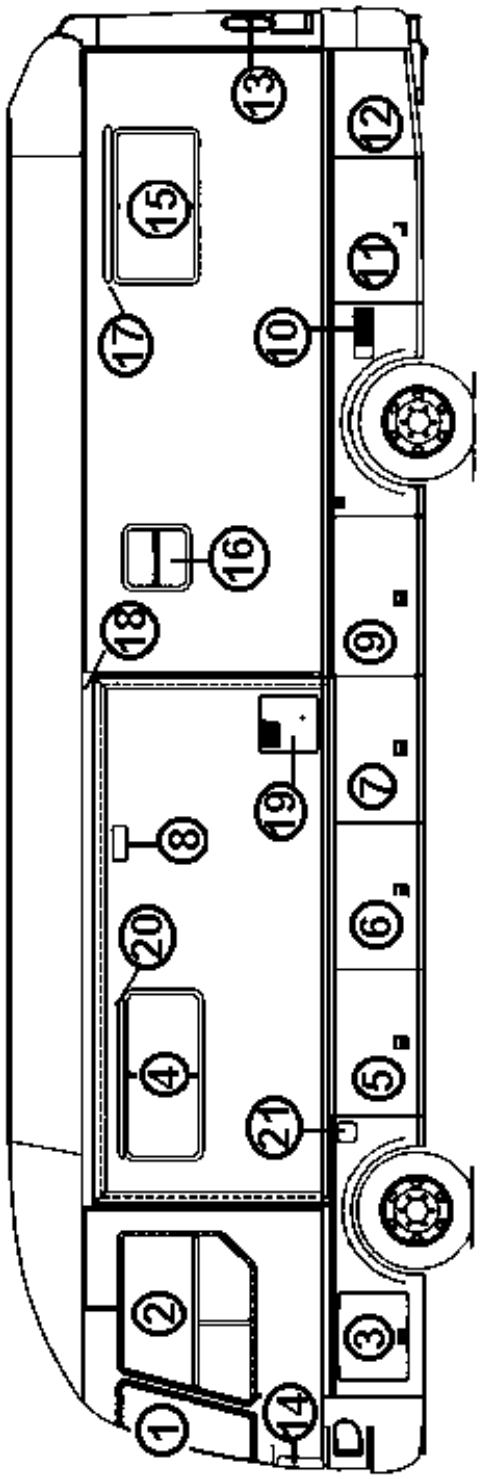

See next page for P/N

2005 390/396/Sky Deck XL

DOORS/WINDOWS/AWNINGS

Roadside Wall, 390 Sky Deck

1. 371369	Windshield, R/S
2. 371382-01	Cab window, R/S
3. 922561	Door assembly, front fender access
3. 203218	Door only
4. 371366-25	Window, R/S horizontal slider, 22 x 43”
5. 921196	Door, compartment, 46.69,short (under slide out)
6. 921196	Door, compartment, 46.69,short (under Slide-out)
7. 921196	Door, compartment, 46.69,short (under Slide out)
8. 511017-02	Vent cover, exterior, range exhaust
9. 921190	Door, compartment, 50.75”
10. 453754	Screen, air intake
11. 921191	Door, compartment, 46.25”
12. 921193	Door, compartment, R/S, angled, 34”
13. 922742	Door, rear access
14. 203232	Access cover, generator, fiberglass
15. 371366-24	Window, R/S horizontal slide w/egress 26 x 43”
16. 371366-28	Tinted slider
17. 702679-61	Awning, window, 4’ Charcoal Tweed
18. 702949-05	Cover, galley slide out
18. 702949-01	Cover, galley slide, hardware
19. 690417-02	Door, water heater access
19. 690417-03	Flange, water heater mounting
20. 702679-61	Awning, window, 4’ Charcoal Tweed
20. 702679-12	Hardware, awning window, Satin
21. 381641	Door, fuel fill access

2005 390/396/Sky Deck XL

DOORS/WINDOWS/AWNINGS

Curbside Wall, 390

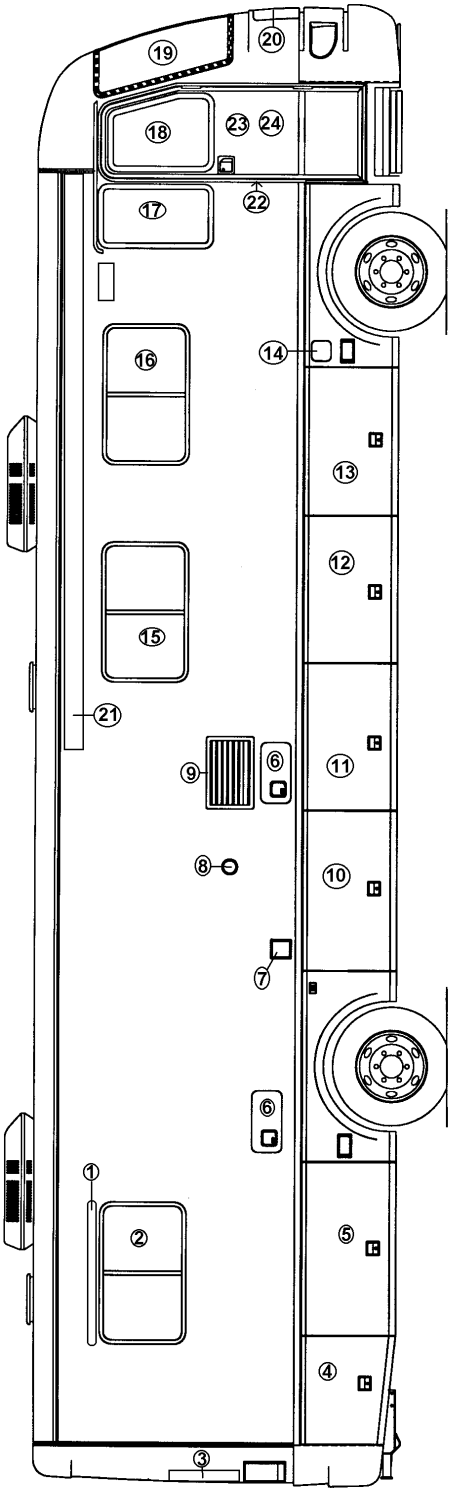

See next page for P/N

2005 390/396/Sky Deck XL

DOORS/WINDOWS/AWNINGS

Curbside Wall, 390

1. 702679-61	Awning, window, 4’ Charcoal Tweed
1. 702679-12	Hardware, 4’. awning, satin
2. 371366-23	Window, C/S horizontal slider 26 x 43”
3. 922742	Door, rear access
4. 921192	Door, C/S, angled 34”
5. 921194	Door, compartment 54.25
6. 690274-06	Door, exterior, Hydroflame
7. 601194-03	Water fill, potable water
8. 386145	Vent cover, washer/dryer
9. 690340-03	Door, exterior refrigerator access
9. 690259-03	Flange, refrigerator access door
10. 921190	Door, compartment 50.75”
11. 921195	Door, compartment, C/S, 46.69
12. 921195	Door, compartment, C/S, 46.69
13. 921195	Door, compartment, C/S, 46.69
14. 381641	Door, fuel fill access
15. 371366-23	Window, C/S horizontal slider, 26 x 43”
16. 371366-23	Window, C/S horizontal slider, 26 x 43”
17. 371366-15	Window, vertical slider 35.62 x 18.5”
18. 371366-16	Window, angled, main door
19. 371370	Windshield, C/S
20. 203232	Access cover, generator, fiberglass
21. 702679-60	Awning, 19ft. patio, Charcoal Tweed
21. 702679-11	HARDWARE AWNING PATIO, SATIN
22. 922519	Jamb assembly, main door
23. 922521-100	Main door assembly
24. 922522	Screen door assembly

2005 390/396/Sky Deck XL

DOORS/WINDOWS/AWNINGS

Curbside Wall, 390 Sky Deck

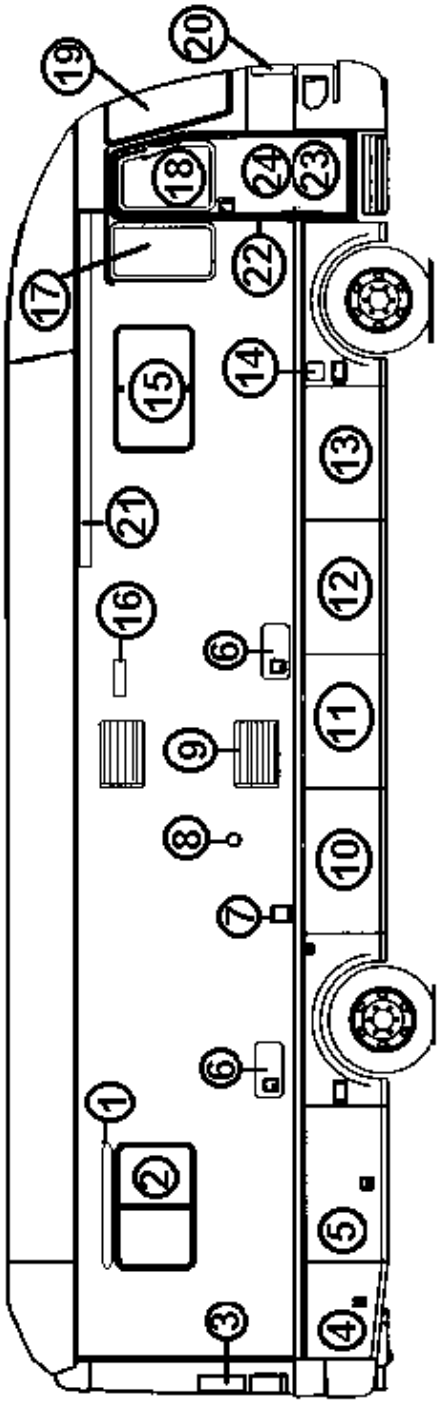

Part Numbers On The Next Page

2005 390/396/Sky Deck XL

DOORS/WINDOWS/AWNINGS

Curbside Wall, 390 Sky Deck

1. 702679-61	Awning, window, 4’ Charcoal Tweed
1. 702679-12	Hardware, 4’. awning, satin
2. 371366-23	Window, C/S horizontal slider 26 x 43”
3. 922742	Door, rear access
4. 921192	Door, C/S, angled 34”
5. 921194	Door, compartment 54.25
6. 690274-06	Door, exterior, Hydroflame
7. 601194-03	Water fill, potable water
8. 386145	VENT KIT -DRYER PAINTABLE
9. 690340-03	Door, exterior refrigerator access
9a) 690259-03	Flange, refrigerator access door
10. 921190	Door, compartment 50.75”
11. 921195	Door, compartment, C/S, 46.69
12. 921195	Door, compartment, C/S, 46.69
13. 921195	Door, compartment, C/S, 46.69
14. 381641	Door, fuel fill access
15. 371366-23	Window, C/S horizontal slider, 26 x 43”
16. 511509	Light, exterior, fluorescent
17. 371366-15	Window, vertical slider 35.62 x 18.5”
18. 371366-16	Window, angled, main door
19. 371370	Windshield, C/S
20. 203232	Access cover, generator, fiberglass
21. 702679-60	Awning, 19ft. patio, Charcoal Tweed
21. 702679-11	HARDWARE AWNING PATIO, SATIN
22. 922519	Jamb assembly, main door
23. 922521-100	Main door assembly
24. 922522	Screen door assembly
702679-62	Awning, 4’ Door, Charcoal Tweed
702679-27	Hardware, Door Awning

2005 390/396/Sky Deck XL

DOORS/WINDOWS/AWNINGS

Curbside Wall, 396

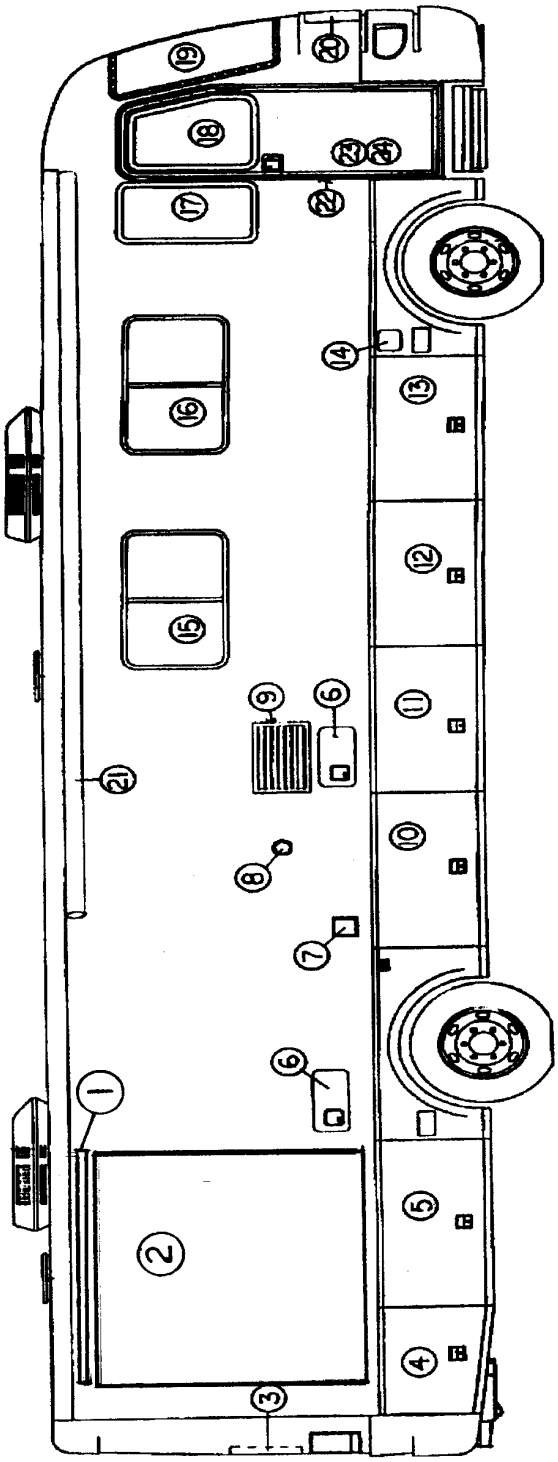

See next page for P/N

2005 390/396/Sky Deck XL

DOORS/WINDOWS/AWNINGS

Curbside Wall, 396

1. 702949-06	Awning, over rear slide
1.. 702949-07	Hardware, cover, wardrobe slide out
2. Slide out room.	For reference only
3. 922742	Door, rear access
4. 921200	Door, C/S, angled 34”
5. 921199	Door, compartment 54.25
6. 690274-06	Door, exterior, Hydroflame
7. 601194-03	Water fill, potable water
8. 386145	VENT KIT -DRYER PAINTABLE
9. 690340-03	Door, exterior refrigerator access
9. 690259-03	Flange, refrigerator access door
10. 921190	Door, compartment 50.75”
11. 921195	Door, compartment, C/S, 46.69
12. 921195	Door, compartment, C/S, 46.69
13. 921195	Door, compartment, C/S, 46.69
14. 381641	Door, fuel fill access
15. 371366-23	Window, C/S horizontal slider, 26 x 43”
16. 371366-23	Window, C/S horizontal slider, 26 x 43”
17. 371366-15	Window, vertical slider 35.62 x 18.5”
18. 371366-16	Window, angled, main door
19. 371370	Windshield, C/S
20. 203232	Access cover, generator, fiberglass
21. 702679-60	Awning, 19ft. patio, Charcoal Tweed
21. 702679-11	Hardware, patio awning, Satin
22. 922519	Jamb assembly, main door
23. 922521-100	Main door assembly
24. 922522	Screen door assembly

2005 390/396/Sky Deck XL

DOORS/WINDOWS/AWNINGS

Power Awning

703300-12	19’ power awning, Charcoal Tweed
703300-02	Hardware, basement, Weatherpro, Satin
703300-03	Control Box, Weatherpro Awning
385577	TAPE CLEAR WEAR STRIP 3.5" WIDE

2005 390/396/Sky Deck XL

DOORS/WINDOWS/AWNINGS

Main/Screen Door

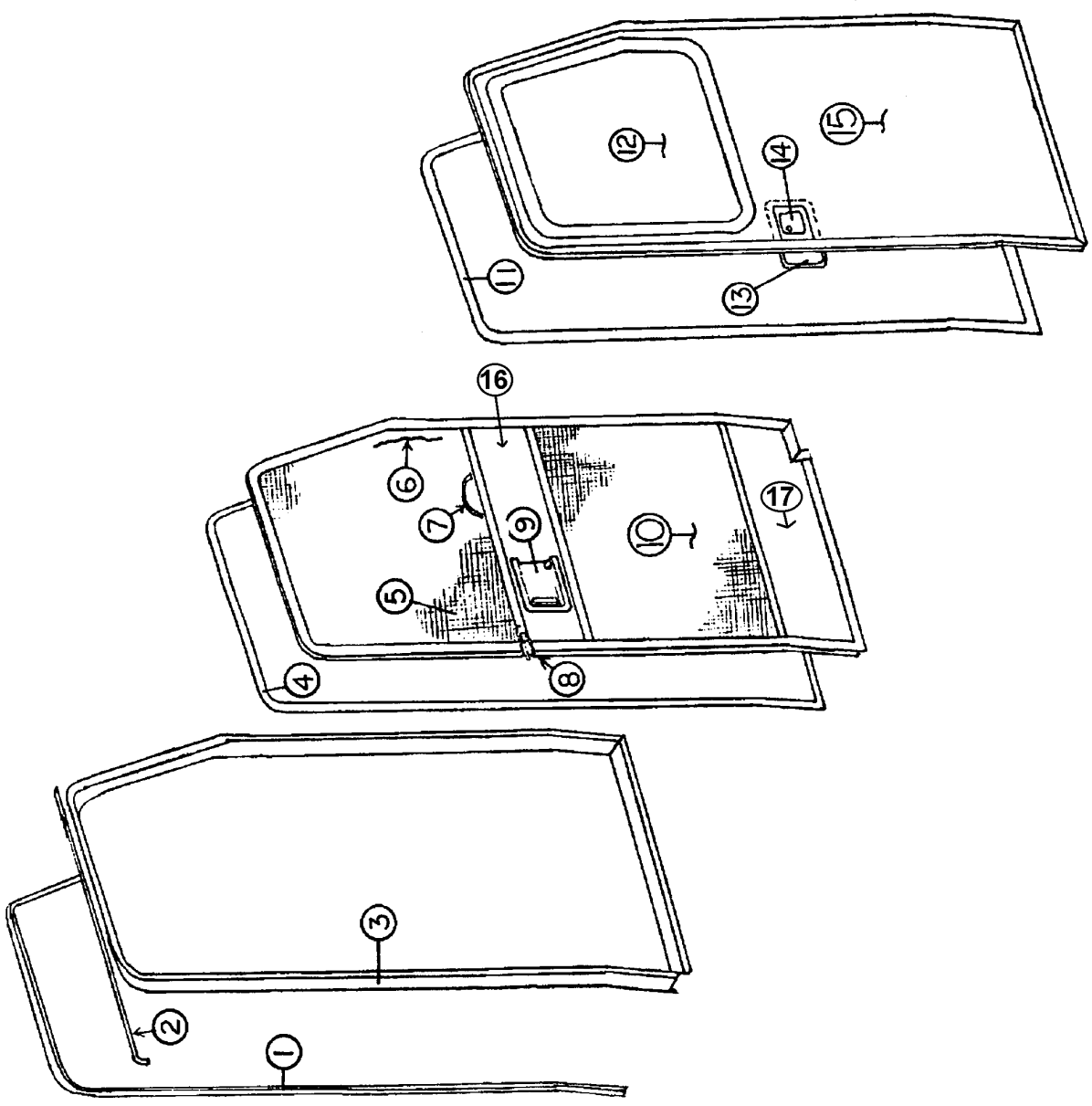

See Next Page for Part numbers.

2005 390/396/Sky Deck XL

DOORS/WINDOWS/AWNINGS

Main/Screen Door

922521-100	Main door assembly
1. 114829	Trim, inside doorjamb
2. 114966	Drip cap, main door/window
3. 922519	Jamb, main door
4. 365013-01	Gasket, screen door, low-density foam
5. 380079	Screen, plastic mesh
6. 200518	Spline, gray, round, screen installation
7. 380004	Pull handle, screen door w/screws
8. 381454	Latch, screen door, double action, Bullet
9. 203000	Close out, plastic, sliding, screen door, (Gizzy)
10. 922522	Screen door assembly
11. 365045	Seal, main door
12. 371366-16	Window, angled, main door
13. 203002	Cover, inner door lock pocket, plastic

14. Door lock--the main door lock is made up of five separate parts- see hardware in Section III for listing

15. 922519	Main Door Frame Assembly
16. 114561	PANEL SLIDER SCREEN DOOR
17. 114837	KICK PANEL, SCREEN DOOR

Main Door Stop

381862	Prop, gas spring
381634	Bracket, prop, curved
203156	Cover, bottom doorstop, black plastic
381633	BRACKET PROP 2" 10MM
381632-01	CLIP SAFETY 10MM STL END FITTING

2005 390/396/Sky Deck XL

DOORS/WINDOWS/AWNINGS

Rear Access Door

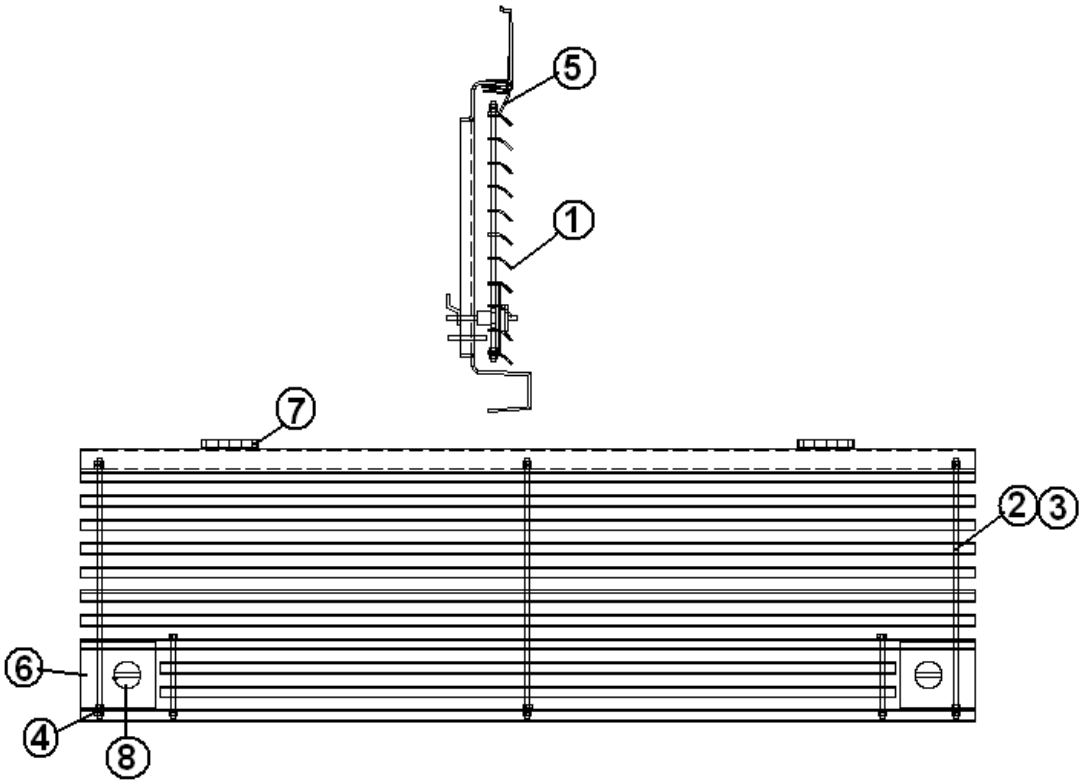

1.	114868	EXTRU.,LOUVER REAR GRILL
2.	345391	ROD-THREADED 1/4-20 X 10'-0"
2.	452213-00118	SPACER, 1.18 LONG
3.	350022	NUT KEP 1/4-20 CAD PLATED
4.	115184	TOP RAIL
5.	115185	PLATE
6.	101115	SHEET, ALUM .060 X 48 X 120
7.	381434	HINGE, S.S., 3 X 3
8.	381227-01	VISE-ACTION LATCH, CURVED PAWL
	381569-05	Gas spring, 30#-rear access
	381262	Bracket, prop w/ball
	381310	Bracket, gas prop, upper

DRAPES/BLINDS/VALANCES

Windshield Drape

702975	Windshield wrap curtain w/track & strap
964900-013	Stop, front windshield, Wrap, CS
964900-023	Stop, front windshield, Wrap, RS
101220	TRACK, STAND-OFF, CURTAIN
101225	EXTRUSION ALUM CURTAIN TRACK ATTACH
101217	EXTRUSION CURTAIN TRACK
114021	EXTRUSION CURTAIN TRACK STANDOFF
100097	EXTRUSION ALUM CURTAIN TRACK
200784	ENDS, CURTAIN TRACK, RH WHITE
200785	ENDS, CURTAIN TRACK LH WHITE

2005 390/396/Sky Deck XL

DRAPES/BLINDS/VALANCES

Shades/Shadow Boxes, 390

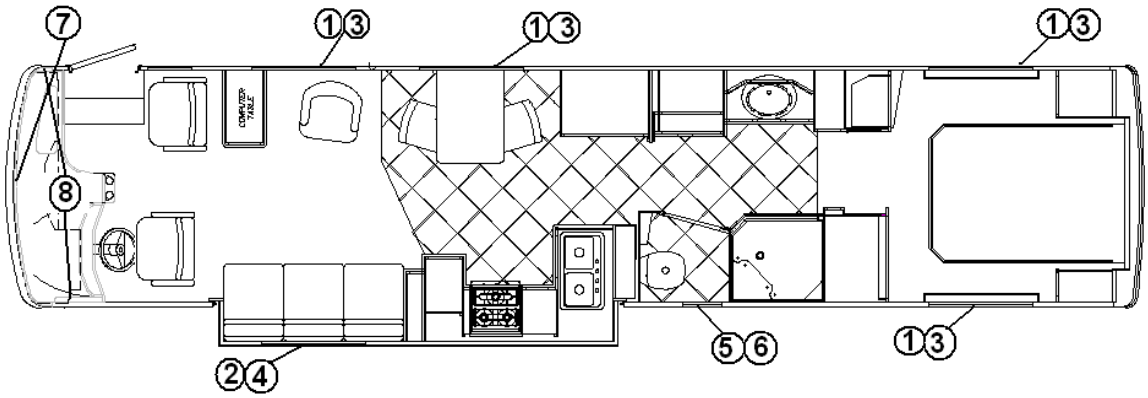

1.	966131-16	SHADOW BOX, 43" X 26"
2.	966131-17	SHADOW BOX, 43" X 22”
3.	703272-39	SHADE PLTD DAY/NITE 44.00” X 28”
4.	703272-40	SHADE PLTD DAY/NITE 44.00 X 24
5.	965078-003	FRAME, WINDOW SURROUND BATH
6.	703273-35	SHADE SGL PLTD NITE 34.5X25" 3
7.	702975	Windshield wrap curtain w/track & strap
8.	702818	Shade, Kool Screen, black

2005 390/396/Sky Deck XL

DRAPES/BLINDS/VALANCES

Shades/Shadow Boxes, 396

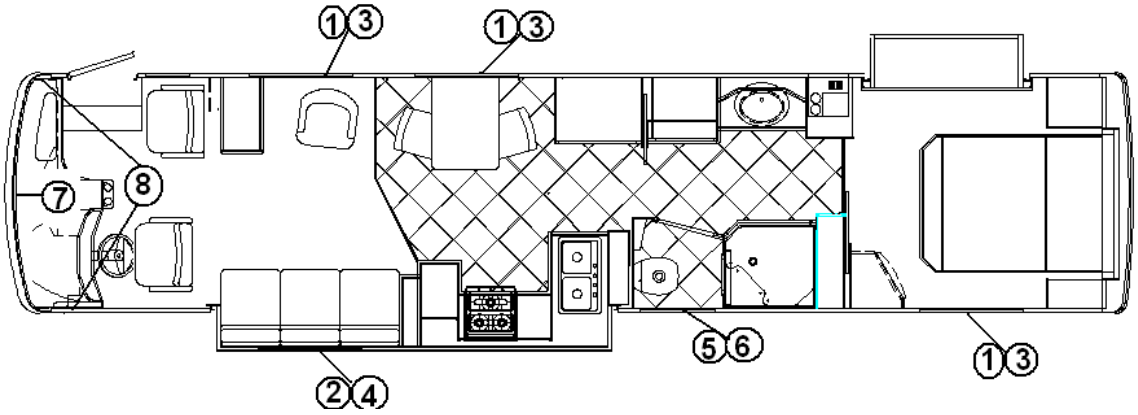

1.	966131-16	SHADOW BOX ASSY-43" X 26"
2.	966131-17	SHADOW BOX ASSY, 43" X 22"
3.	703272-39	SHADE PLTD DAY/NITE 44.00” X 28”
4.	703272-40	SHADE PLTD DAY/NITE 44.00” X 24”
5.	965078-003	FRAME, WINDOW SURROUND BATH
6.	703273-35	SHADE SGL PLTD NITE 34.5” X 25"
7.	702975	Windshield wrap curtain w/track & strap
8.	702818	Shade, Kool Screen, black

2005 390/396/Sky Deck XL

DRAPES/BLINDS/VALANCES

Shades/Shadow Boxes, 396 Sky Deck

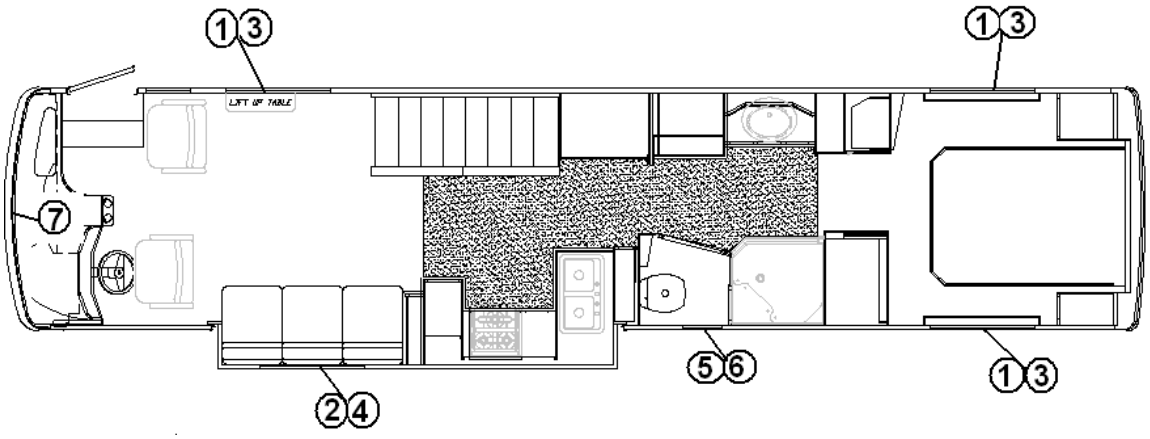

1.	966131-16	SHADOW BOX ASSY-43" X 26"
2.	966131-17	SHADOW BOX ASSY-43"X 22"
3.	703272-39	SHADE PLTD DAY/NITE 44.00” X 28”
4.	703272-40	SHADE PLTD DAY/NITE 44.00” X 24”
5.	965078-006	FRAME, WINDOW SURROUND BATH
6.	703273-35	SHADE SGL PLTD NITE 34.5” X 25"
7.	702975	Windshield wrap curtain w/track & strap

2005 390/396/Sky Deck XL

ELECTRICAL, 110 VOLT

Power Cord

511149-04	Power cord, 36 ft.
10469W	Adapter plug, 30M-50 Amp, 18 in.
381435	Hatch, 4”, white, power cord exit

Inverter/Battery Charger

511418-01	Inverter/charger, 2000 Watt
511888	Inverter/charger, 2000 Watt, CSA
511418-02	Panel, inverter on/off, remote
511418-05	Sensor, battery temperature
511418-03	Fuse and holder, 300-amp TFB300R
511333	CABLE-BATTERY 2/0 BLACK
511273	TRAY BATTERY HOLD DOWN
511089-01	TERMINAL-BATTERY-NEGATIVE
511089-03	TERMINAL BATTERY POSITIVE 2/O

Generator

511580	Generator, Onan 8.0 QD
914341	Generator tail pipe
452424	FLANGE GEN. EXHAUST
381388	BRACKET, MUFFLER HANGER #155-1234
510103	Hour meter, exterior
511506	Switch, generator start
511289	BREAKER KIT 30 AMP ONAN
511686	Hour meter w/deluxe bezel, interior
511206-02	BOX WEATHER PROOF 2GANG ¾” HOLE

Breaker Box, Coach, CSA

510564-09	BREAKER, BRYANT 15A SPST
511453	BREAKER BOX SQ.D SURFACE MOUNT
453621-01	BRACKET FUSE BLOCK 12V (CSA)

2005 390/396/Sky Deck XL

ELECTRICAL, 110 VOLT

Exterior Receptacles/Circuit Tester

510888-05	RECEPTACLE W/COVER GFI WHITE
511330	BOX, SWITCH 3" X 2" X 3.5", CSA
511729	Duplex outlet cover, waterproof, Sky Deck
511023	Tester, circuit analyzer (loose item)

Generator Hook Up

511084	RECEPTACLE TRAILER SINGLE
510817-01	SINGLE GANG WEATHER PROOF BOX
510857-04	CONDUIT, FLEX. LIQUID TIGHT ½"
511255	STRAIN RELIEF
511260	COVER WEATHER PROOF SINGLE GANG

Dryer Receptacle

511084	RECEPTACLE TRAILER SINGLE
511085	BOX METAL 4" SQ. 1.5" DEEP
511086	COVER BOX METAL
511276	COVER 12VOLT OUTLET BLACK

Breaker Box, Coach, USA

510723	Breaker box, Square D, 30 amp
510724	BREAKER, DOUBLE POLE, 50 AMP, SQUARE
510662	Breaker, 20 amp
510663	Breaker, 30 amp
510678	Breaker, 20 amp, square D
511533	Switch, auto transfer, 50 amp

2005 390/396/Sky Deck XL

ELECTRICAL, 12 VOLT

Chassis Diagram

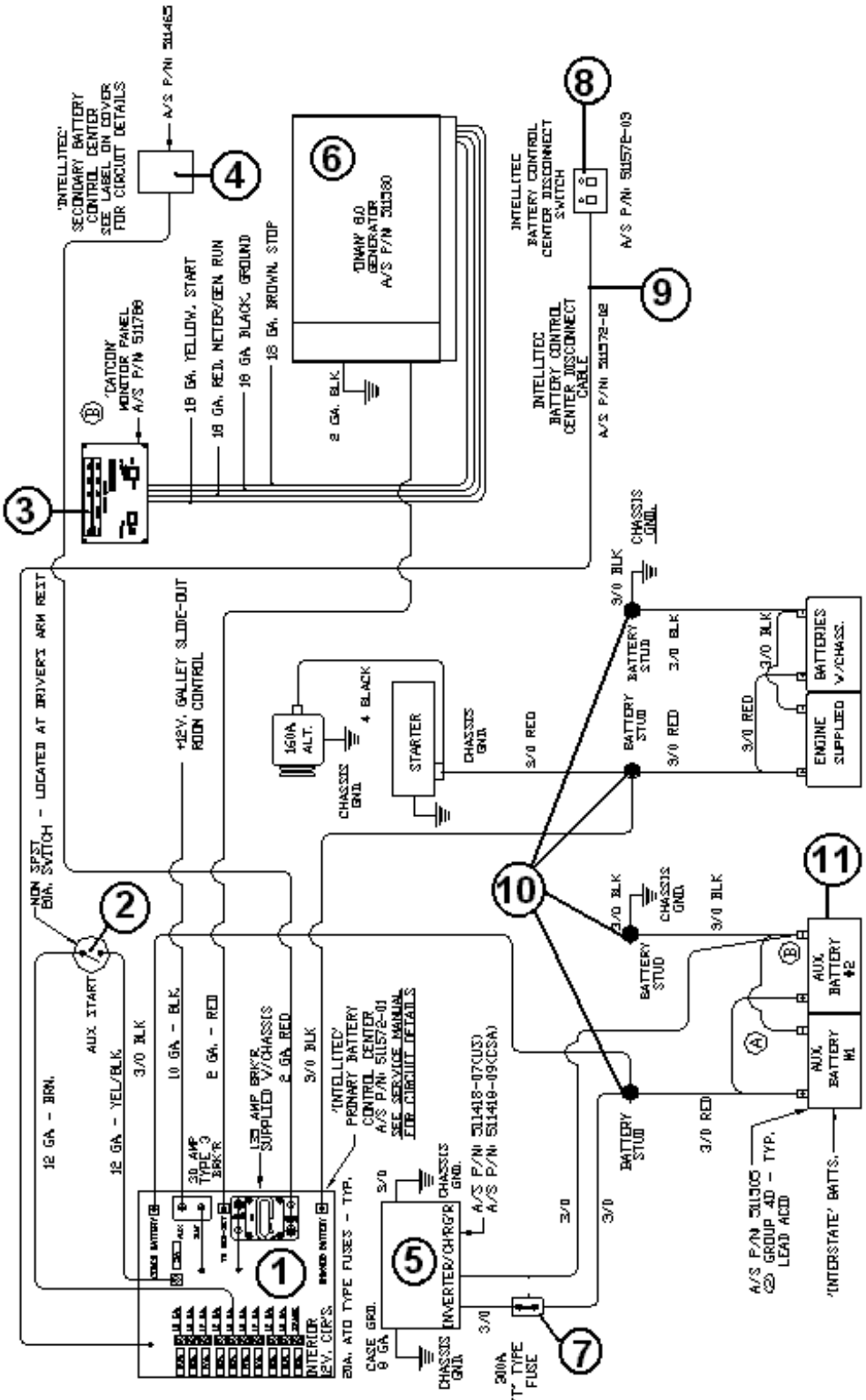

ELECTRICAL, 12 VOLT

Chassis Diagram

1. 511572-01	Primary battery control center, Intellitec
2. 511579-103	Auxiliary start switch, located in armrest
3. 511788-02	CATCON monitor panel
4. 511465	Secondary battery control panel
5. 511418-01	2000 W inverter/converter
5. 511888	Inverter/charger, 2000 Watt, CSA
6. 511580	Generator, 8.0 QD
7. 511418-03	Fuse holder & fuse (300 amps)
7. 511418-04	300-amp fuse only
8. 511572-05	Battery disconnect switch, Intellitec
9. 511572-02	Disconnect switch cable, Intellitec
10. 511510-02	Junction block, stud type, Red
10. 511510-01	Junction block, stud type, Black
11. 511505	Battery, deep cycle, 4D
511615	W.P. GFI/DEC COVER W/GASKET
511616-01	RECEPTACLE MOUNTING-SINGLE WHITE
511090	STUD-TYPE JUNCTION BLOCK

ELECTRICAL, 12 VOLT

Battery Compartment/Load Center

511505	Battery, 4D Interstate
453716	Tray, battery, roll out,
453716-01	Strap, tray
511273	TRAY BATTERY HOLD DOWN
511571	Load center, 100A w/flush cover, 396
511571-01	Load center, 100A w/flush cover, 396, CSA
510724	Breaker, double pole, 50 amp
511510-01	JUNCTION STUD-PASS THRU BLACK
511554	WING NUT-GROUNDING "GREEN"
511555	BATTERY LUG -1/4"STUD 2-1 AWGR
511333	CABLE-BATTERY 2/0 BLACK
511089-01	TERMINAL-BATTERY-NEGATIVE
511089-03	TERMINAL BATTERY POSITIVE 2/O
201709-02	EXTRUSION TRIM MOLDING, BLACK

Interior 12-Volt Receptacle

510596	Cigarette lighter
510596-01	WIRING CIGARETTE LIGHTER CHROME
510807	Outlet, 12 volt, lighter receptacle
511276	Cover, 12-volt outlet, black

511740	Warning light panel, Safety Rail
510843	Flasher, heavy duty

Bosch Relay

510914	TERMINAL, RELAY BLOCK
510844-01	Relay, Bosch
510844-02	Socket, Bosch relay

2005 390/396/Sky Deck XL

ELECTRICAL, 12 VOLT

Switches/Panels, Cab Armrests

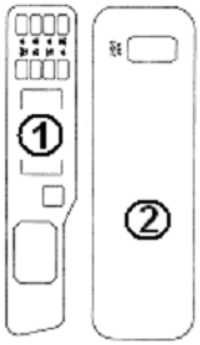

1.	511820	Driver switch Switches Panel w/switches
2.	511574	Passenger Switch Panel w/switches
	320094-04	SCREW, OVAL HEAD, BLACK
	320006	SCREW SHEET METAL 8 X ¾”
	381081-01	SNAP CAP W/WASHER, WHITE
	511579-100	Back-up camera, Door lock
	511579-101	Drive, map, aisle, docking lights
	511579-102	Defrost fans, HI-LO
	511579-103	Aux start, I.C.C. blink
	511579-104	Generator stop/start
	511579-105	Switch blank (if needed)
	511579-106	LED light & Bezel door unlocked warning
	511305-10	Remote exterior mirror
	511419-06	Wiper/washer

ELECTRICAL, 12 VOLT

Switches/Switch Covers

511327-01	Switch body w/rocker switch, single, black
511507	Switch body w/rocker switches, 3 gang, black
511325	Switch body w/rocker switches, 4-gang
511325-01	Switch body, 4-gang, black
511327	Rocker switch, single, white, ON/OFF
511474-02	Switch, dimmer, black
511506	Switch, generator start, bedroom
511730	Switch panel, 4-gang, black
511771	Switch Assembly, two-gang white
511605	Exterior water pump switch
511508-01	COVER-SWITCH BLANK 1-2 GANG BLACK
511508-02	COVER-SWITCH BLANK 1-2 GANG WHITE
511567-01	SWITCH BODY W/ROCKER, 2 GANG BLACK
511328	Cover, single, white, “CEILING”
511329	Switch, rocker, SPDT, white

Switch Custer, Main Door

962203-01	Switch cluster, main door
511078	Switch body, illuminated, door entrance
511083-02	Cover, switch, 3 & 4 gang, door entrance
511513	Light, green LED

Interior Lights

511848	Light, fluorescent, 13" recessed
511847	Light, fluorescent, 4.75"X 18.75"
511849	Light, fluorescent, Surface Mount, #98 P
511494	Wall lamp, 12 volt, lounge
511495-100	Bulb, 71-921 wedge base
511495	Wall lamp, bedroom
511495-100	Bulb 71-921F511

ELECTRICAL, 12 VOLT

Interior Lights

511248	Light, incandescent single, square
50085-02	Bulb incandescent, #1141
511361	Light, courtesy, flush mount, black (no separate bulb)
511648	Light, reading & Sky Deck end table, halogen, white
511694-01	Light, halogen, reading w/switch, Nickel/Brass
511137-100	Bulb, 12 volt, JC-10
511492	Light, medicine cabinet, three bulbs Bulb 71-9019F(reference only)
511694-01	READING LIGHT-HALOGEN, NICKEL/BRASS, OVER SOFA
511477	Reading light, round, halogen
511137-100	Bulb, 12volt, JC-10, wedge base
511493	Light, dinette, hanging, 3-bulb w/switch
511493-100	Bulb, 71-921, wedge base
511410	LIGHT-SHOWER INCANDESCENT SINGLE
500956	LIGHT, WDRB, #PD210-111BRN, W/SWITCH
511490-01	LIGHTING-FLEXIBLE, #STO12-TC
511490-02	CONNECTOR KIT-FLEX LIGHTING

Fuses

511452	FUSE HOLDER 15A WEATHERPROOF ATC
500773-01	FUSE ATC 12V DC 1 AMP
500883-05	FUSE, 12 VOLT-AGC, 5 AMP
500883-15	FUSES, 12V, CSA 15 AMP
511392	Fuse holder, 15amp,in-line
500883-01	FUSE 12, CSA 1 AMP
510696	HOLDER, FUSE, IN-LINE

ELECTRICAL, 12 VOLT

Exterior Lights

510672-02	Light, porch, white
510732	Utility light
511248	Light, compartment
510732-02	CSA PORCH LIGHT
511101-01	Light, docking, halogen, S.S., bezel
511400	Light, front top marker, tear drop, amber
510984-02	Light, side marker, amber
510984-01	Light, side marker, red
381396	GASKET, CLEARANCE LIGHT
511879	Light, fog, round, clear
511497	Search light w/remote

Tail/License Plate Lights

511407	Light, license plate w/holder
511589-01	Tail light assembly, R/S
7511589-02	Tail light assembly, C/S
511584	Socket, turn signal, Ford
511585	Socket, Stop/tail light, Ford
511586	Socket, Back-up light, Ford
511587	Bulb, 3357, stop/tail
511588	Bulb, 3156, turn/back-up
511154-02	Light strip, 3rd brake

Headlamp/Parking Lights

511397-02	Head light, C/S
511397-01	Head light, R/S
511398-01	Parking lamp, R/S
511398-02	Parking lamp, C/S
511402	Socket and pigtail, headlight
511406	Socket, front turn and parking light
511408	Socket, side marker w/194NA bulb

ELECTRICAL, 12 VOLT

Exterior Mirrors

511512-01	Mirror, cab, bus style, black, R/S
511512-02	Mirror, cab, bus style, black, C/S
511305-10	Switch, remote, heated mirror, R/S
511305-09	CABLE-EXTENSION 5.5’
511305-11	CABLE-EXTENSION 15’

Monitor System

511788-02	MONITOR PANEL-CATCON
511252	PLUG PHONE 4 CONDUCTOR
511789	SENSOR-TANK MONITOR #500-10050
511789-01	BOOT-SENSOR #500-20010-05
511393	COUPLER-MODULAR EXTEN 4 CONDUC
511817	COUPLER ASSY-IN LINE
511286-01	Telephone wire, 26 gauge, and black
511286-02	Telephone wire, 26 gauge, and ivory

Keyless Entry

511162-01	Keyless entry w/remote
511162-02	Transmitter, 4 channel
510802-01	Actuator, door lock, 5 wires
511352	Module, locking, centralized
451486	FLAT LINKAGE ELECTRIC DOOR LOCK
451485	WIRE LINKAGE, ELECTRIC DOOR LOCK
381741	KEY FOB INSTRUCTIONAL PLAQUE

Solar Panel

511572-04	Charge controller, Solar panel
511572-06	Monitor panel, charge controller, solar panel
511142-01	Solar panel, 53 watt
511142-02	Mounting bracket (4., solar panel

ELECTRICAL, 12 VOLT

Detectors/Alarms

510781	Detector, smoke
511309	Detector, LPG, flush mount
511343	Detector, carbon monoxide, 9 volt
510734	Alarm, back up
510976	Buzzer, headlamp, warning

Sky Deck Roof Lights/Rail Switch

511726	Stowaway light base, Sky Deck Roof
511727	Frosted Globe A/R Light w\o collar
511742	Lever switch, safety rail warning light

Air Horn

510804	Horns, air, chrome
510804-01	ELBOW KIT, AIR HORN

Entrance Light

511509	Light, entrance door, fluorescent
680084	Bulb, fluorescent, F8T5/CW

2005 390/396/Sky Deck XL

ELECTRICAL, 12 VOLT

Windshield Wiper

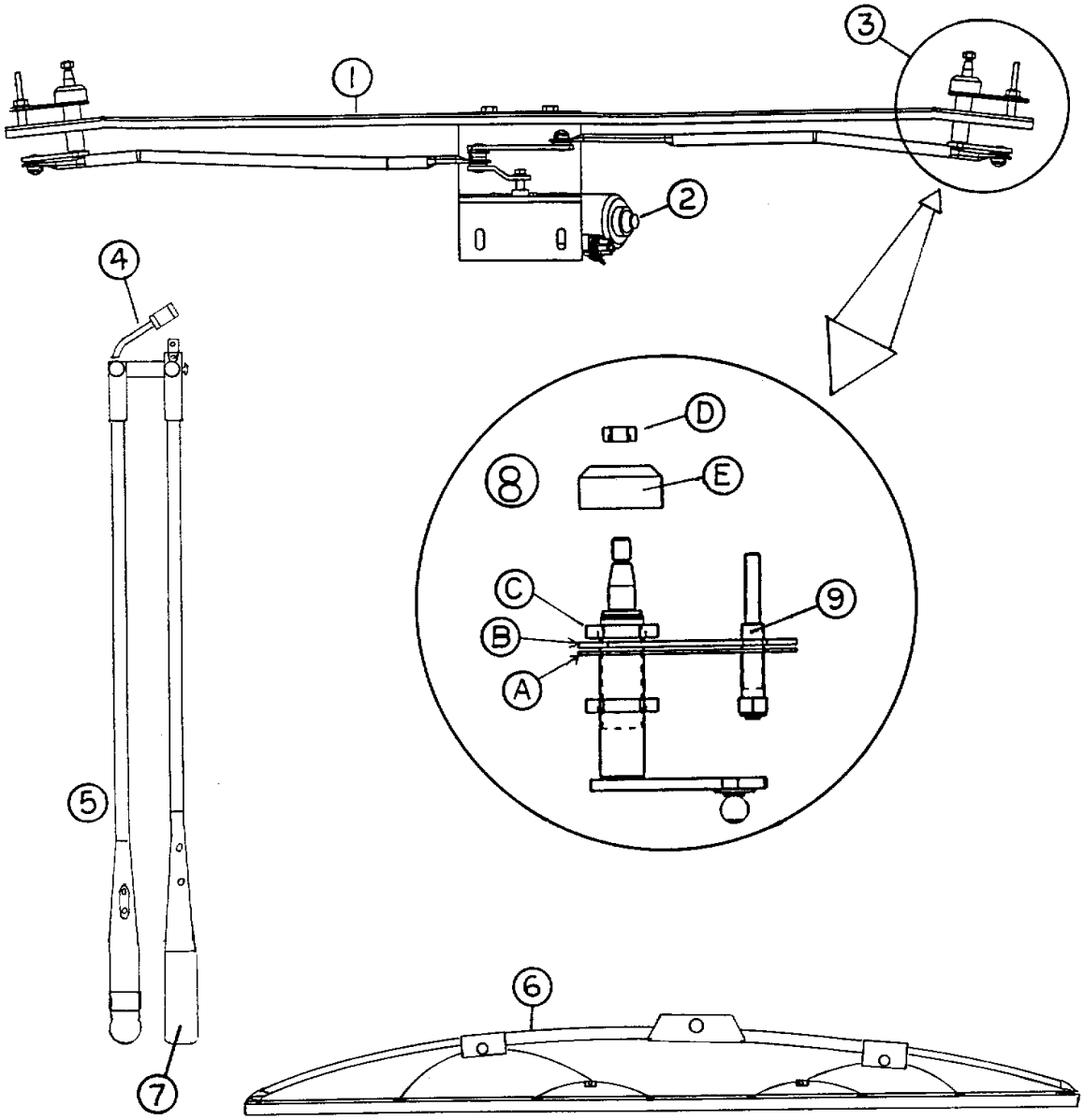

See next page for P/N

ELECTRICAL, 12 VOLT

Windshield Wiper

1. 511440	Windshield wiper assy, XL
2. 511440-100	Wiper motor, Ford/Freightliner
3. 511440-102	Pivot and link assembly, Trico
4. 511419-103	Washer jet and tubing, Trico
5. 511419-104	Pantograph arm assembly, Trico
6. 511419-105	Blade assembly, 28”, Trico
7. 511419-106	Head cover, main arm, black, Trico
8. 511440-107	Hardware kit, includes the following:
8. Gasket	
8. Face plate	
8. Thin nut	
8. 8 mm nut	
8. Rain shield	
9. 511440-108	Swivel assembly, slave arm, Trico
511419-06	Switch, wiper/washer, Freightliner

Monitor, Backup

511642	MONITOR SYSTEM-WELDEX
453968	BRACKET-CAMERA
453967	BRACKET-DASH MONITOR
345414	SPRING-CAMERA BRACKET
511044-03	Actuator, two position, rear camera
453031	BRASS BRACKET SPRING
511044-05	HOLE INSERT W-2234982
511044-04	PIGTAIL FOR ACTUATOR
381542	THREADED STUD, MONITOR SUPPORT
454167	BRACKET, CAMARA
203181	COVER, BACK UP MONITOR

ENTERTAINMENT

Television, Bedroom

690488	TV-20"MOD.SONY #KV-20FS100MT12
511633	PATCH CORD M/M RCA 10'
511634	PATCH CORD 3-WAY M/M RCA 6'
115139-01	BRACKET-RH TV MOUNT BEDROOM
115139-02	BRACKET-LH TV MOUNT BEDROOM
500975	Headphones, light weight

Television Antenna/Jack

510788-01	Antenna, TV, Winegard
510788-03	Amplifier, TV antenna
511735	Antenna TV, Omni-directional-Roadster
510788-04	Hardware package, TV antenna
500976	Outlet, TV jack
500996	Jack, TV/phone, gray
510624-01	MODULAR PHONE QUICK JACK WHITE

Television, Flat screen, Lounge

690504	TV- LCD COLOR 26" SONY
454236	BRKT-BOTTOM LCD TV
454237	BRKT. UPPER LCD TV
345425-05	SCREW-16MM PAN HD BLACK
320005	SCREW SHEET METAL 8 X 1BH
800405-006	PLUG BUTTON HARDWOOD, Oak
800405-003	PLUG BUTTON HARDWOOD, Hickory
365239	FOAM NON-SKID PAD 1/4 X 1 X 1/
511278	Lock out, 110 volt disconnect
511283	BOX HANDY 2" X 4" METAL

ENTERTAINMENT

Home Theatre Sound System

690505	HOME THEATER SYS-DVD/VCR SONY
690505-01	Speaker, Flush, 25”
690505-02	Grille, Cream2.5”
690505-03	DVD/VCR/CD Main Unit
690505-04	Base module
690505-05	Remote Control
690505-06	Speaker wire packge
511858	SOURCE SELECTOR-SPEAKER #6CHXO
511858-01	SELECTOR-SPKR.SOURCE HT

Radio

511732	RADIO AM/FM/CD, CDX-CA710X
511761	SPEAKER 120W 6.5" WHITE SONY

Antenna, Radio/CB

511807	Antenna, radio, rubber
511458	Antenna, side mount, CB
500484-07	ANTENNA LEAD & EXTENSION 144"

Radio Remote Control, Bedroom

511517-02	CABLE LEAD-REMOTE COMMANDER RCX-60
511517-01	Remote commander, Sony

CD Changer, 390/396

511191	CD changer, 10 Disc, Sony, CDX-646
511191-02	Patch cord, RCA, male to male, 5.5 meter
511191-01	CD changer data cable, 5.5 meter
511721	JVC, 12 Disc CD Changer

2005 390/396/Sky Deck XL

ENTERTAINMENT

Video Control System

511310	Video control center
511409	TERMINAL-FEMALE QUICK DISC.AA2134
511570	PATCH CORD, RCA, MALE-TO-MALE 50'
511488-03	Patch cord, radio to amplifier
511423	PLUG-EARPHONE W/6" WIRE #30421W

Speaker/Headphone System

511464-07	Speaker/headphone system, Includes:
511464-02	Speaker, 4”, 5-Watt max., 8 ohm
511464-03	Speaker grille, black
511464-05	Headphone\dual speaker control
511464-06	Speaker harness

Satellite System

511624-01	Satellite system, auto, stationary
511624-04	Harness Satellite Dish Control
690449	Receiver, satellite, DSS, Sony
511635	Plate-Dual cable, Dome entry
511384	Satellite pre-wire kit, includes:
511384-01	RG-6 Coax cable
511384-02	RG-coax cable connector
511384-03	Decals, widow, roof, pre-wire brochure
511388	CONNECTOR-2 PIN CAP
511389	TERMINAL-SOCKET AMP

2005 390/396/Sky Deck XL

FASTENERS

Rivets

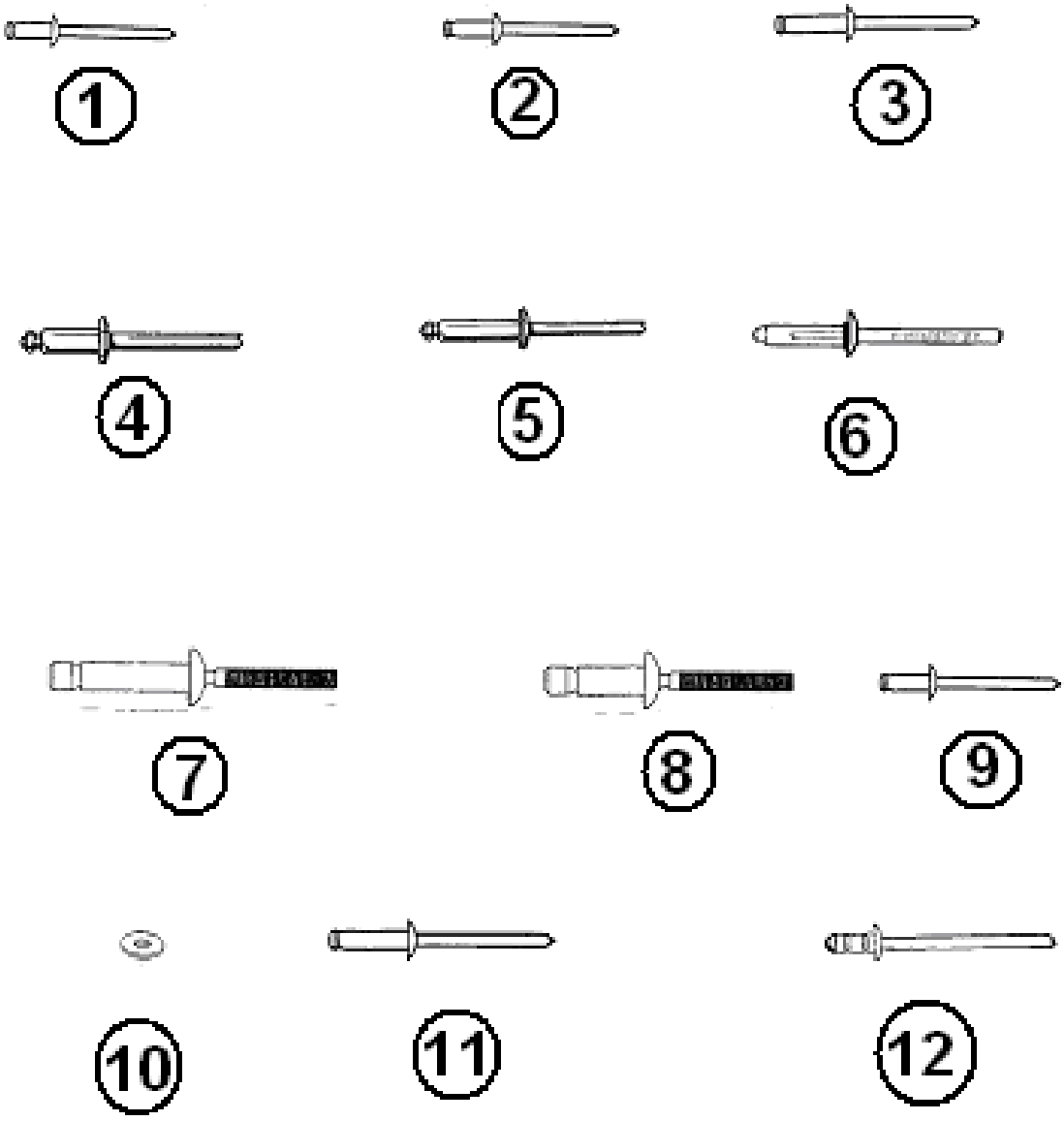

Part Numbers On The Next Page

2005 390/396/Sky Deck XL

FASTENERS

Rivets

Rivets

1. 330126-02 Rivet, 1/8” diameter, Grip range .126-.187, Stainless steel body, Stainless steel mandrel
2. 330126-03 Rivet, 1/8“ grip range, .126-.250 stainless steel body, stainless steel mandrel
3. 330136-04 Rivet, Diameter 1/8”, Grip range .313-.375, Stainless steel body, Stainless steel mandrel
4. 330031-03 Rivet, diameter 3/16”, grip range .125-.250, stainless steel mandrel
5. 330031-03 Rivet, Diameter 3/16”, Grip range .126-.250, Stainless steel body, Steel mandrel
6. 320108-01 Rivet, bulb tite, diameter 3/16”, grip range .050-.187, aluminum body, aluminum mandrel

6. 320108-02 Rivet, bulb tite, diameter 3/16”, grip range .050-.187, w/washer

7. 330139-02 Diameter ¼”, Grip range .350-.625, Stainless steel body, Stainless steel mandrel
8. 330139-01 Diameter ¼”, grip range .080-.375, stainless steel body, stainless steel mandrel
9. 330127-03 Diameter 1/8” Grip range .063-.125, Aluminum body, Aluminum mandrel
10. 300101 1/8” I.D. washer, aluminum
11. 330127-05 Diameter 1/8”, Grip range .251-.312, Aluminum body, Aluminum mandrel
12. 330137 Diameter 1/8”, grip range .039-.189, aluminum body, steel mandrel

Not Shown

330016-04 Pop rivet, closed end sealing

2005 390/396/Sky Deck XL

FASTENERS

Screws

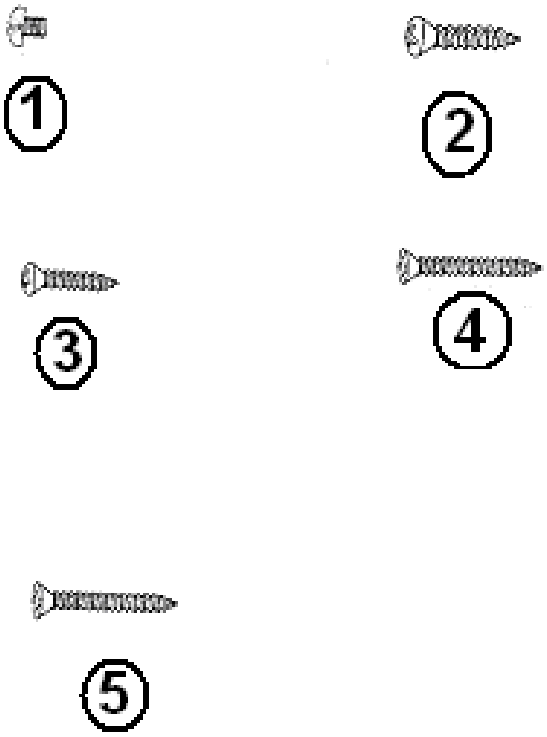

1. 320122 Screw, pan head, Phillips, Black #4 x 1/8" (glove box tray)

2. 320114-04 Screw, wood oval, Phillips, antique brass, #5 x ½"

3. 320114-05 Screw wood, oval head, Phillips, Antique brass #5 x 5/8"

4. 320115-06 Screw wood, flat head, Phillips, stainless steel # 6 x 1.00"

5. 320124-06Screw, flathead, Phillips Stainless w/white head

320037-00 Screw, #6 FH type A, SMS, Zinc, Mirror clip

2005 390/396/Sky Deck XL

FLOOR COVERING

Carpet/Mats

703466-01	Carpet, TAPIOCA
700173	Carpet padding, 3/8”
700173-01	Carpet padding, ½”
701538-01	Carpet, Velour black, storage compartments
702979-01	Vinyl flooring cover, compartment bottoms
702550-01	Matt, entrance, step well
702549	Matt, entrance, w/Airstream logo
702893	FLOORING-SMOOTH RUBBER .13" X 31" W
702812-02	FLOORING-STEP TREAD BLACK 72"
381346	FLOOR MATTS

Tile

702903-14	TILE-CERAMIC JAMAICA NOCE, Lavatory
702903-11	GRANI RAPID POWDER, white
702903-12	GRANI RAPID LIQUID
702903-03	MATT RIBBED, (TILE FLOOR ASSY.)
702903-07	Grout, epoxy, Ivory
702903-05	Shluter Strip

Sky Deck Roof

365279	Sky Deck floor, non-skid tape

FURNITURE

Doors, Cabinet, Oak

801253-016	Door, raised panel	9.00 x 16.25
801253-026	Door, raised panel	14.50 x 11.25
801253-036	Door, raised panel	14.50 x 16.25
801253-046	Door, raised panel	18.38 x 11.25
801253-056	Door, raised panel	10.50 x 20.50
801253-066	Door, raised panel	10.50 x 34.00
801253-076	Door, raised panel	18.38 x 23.00
801253-086	Door, raised panel	11.50 x 16.25
801253-096	Door, raised panel	16.00 x 12.75
801253-106	Door, raised panel	24.50 x 12.75
801253-116	Door, raised panel	12.75 x 27.00
801253-126	Door, raised panel	14.25 x 34.00

Doors, Cabinet, Hickory

801253-013	Door, raised panel	9.00 x 16.25
801253-023	Door, raised panel	14.50 x 11.25
801253-033	Door, raised panel	14.50 x 16.25
801253-043	Door, raised panel	18.38 x 11.25
801253-053	Door, raised panel	10.50 x 20.50
801253-063	Door, raised panel	10.50 x 34.00
801253-073	Door, raised panel	18.38 x 23.00
801253-083	Door, raised panel	11.50 x 16.25
801253-093	Door, raised panel	16.00 x 12.75
801253-103	Door, raised panel	24.50 x 12.75
801253-113	Door, raised panel	12.75 x 27.00
801253-123	Door, raised panel	14.25 x 34.00

2005 390/396/Sky Deck XL

FURNITURE

Doors, Shower/Sliding/Swinging

702991	Shower door, 390, 396, Sky Deck
964814-006	Door, sliding, 29.25 x 71.5, oak
965067-006	Door guide, stop block, oak
965164-006	Door, sliding, 34. 00” x 71.50”, oak
381643-02	Door, sliding, 34.0 x 73.0
964813-006	Door, swinging, 24.00 x 74.00, oak
381727-02	Door, sliding wardrobe, 58.25 x 46.00
964814-003	Door, sliding, 29.25 x 71.5, Hickory
965067-003	Door guide, stop block, Hickory
965164-003	Door, sliding, 34. 00” x 71.50”, Hickory
964813-003	Door, swinging, 24.00 x 74.00, Hickory
381443-01	SLIDING DOOR SET #71-222-5’
381100	SLIDING DOOR GUIDE

Bi-Fold Doors

964903-003	TOP-FOLDING DOOR, Hickory
964899-003	HEADER FOLDING DOOR, Hickory
964903-006	TOP-FOLDING DOOR, oak
964899-006	HEADER FOLDING DOOR, oak
964815-003	Door, folding, 16.5 x 74.5, Hickory
964919-003	Door, folding, 16.94 x 74.5, Hickory
964815-006	Door, folding, 16.5 x 74.5, oak
964919-006	Door, folding, 16.94 x 74.5, oak
381874	GLIDE-PLASTIC

2005 390/396/Sky Deck XL

FURNITURE

Doors, Louvered, Oak

801255-016	Door, louvered,	27.0 x 12.0
801255-026	Door louvered,	12.75 x 36.0
801255-036	Door, louvered,	16.75 x 12.0
801255-046	Door, louvered,	14.25 x 12.00
801255-056	Door, louvered, 16 ½” x 34 3/8”	

Doors, Louvered, Hickory

801255-013	Door, louvered,	27.0 x 12.0
801255-023	Door louvered,	12.75 x 36.0
801255-033	Door, louvered,	16.75 x 12.0
801255-043	Door, louvered,	14.25 x 12.00
801255-053	Door, louvered, 16 ½” x 34 3/8”	

Doors, Glass, Roof Locker

371375-05	GLASS-3/16"TINTED 8.38"X16.813

Doors, Frames For Mirrors, Oak

801256-016	Doorframes only	16.5 x 69.00
801256-026	Doorframes only	10.5 x 34.5
801256-036	Doorframe only	11.50 x 16.25
801256-046	Doorframe only	9.00 x 34.50
801256-056	Doorframe only	14.50 x 69.00

Doors, Frames For Mirrors, Hickory

801256-013	Doorframes only	16.5 x 69.00
801256-023	Doorframes only	10.5 x 34.5
801256-033	Doorframe only	11.50 x 16.25
801256-043	Doorframe only	9.00 x 34.50
801256-053	Doorframe only	14.50 x 69.00

2005 390/396/Sky Deck XL

FURNITURE

Mirrors

372203-25	Mirror, safety glass	7.50 x 21.25
372203-26	Mirror, safety glass	13.62 x 58.50
372203-11	Mirror, safety glass	17.00 x 21.25
372203-29	GLASS SAFETY MIRRORED	6.00” X 19”
371262-68	Mirror, safety glass	17.50 x 70.38
372211-01	Mirror, beveled three sides	15.25 x 16.75
372210-12	Mirror, beveled	6.00 x 22.00
372210-13	Mirror, beveled	6.00 x 41.50
372210-14	Mirror, beveled	7.62 x 31.62
372210-15	Mirror, beveled	13.62 x 33.62
372210-17	Mirror, beveled	15.25 x 22.62
372210-20	Mirror, beveled	6.12 x 31.62
372210-21	Mirror, beveled	11.62 x 32.62
371387	Mirror (Headboard), 10 V w/bevel	
385940	MIRROR PULL BRASS	
381754	MIRROR CLIP R2	

Drawer Faces, Oak

801254-016	Drawer face	8.00 x 14.50
801254-026	Drawer face	12.00 x 14.25
801254-036	Drawer face	4.75 x 21.50
801254-046	Drawer face	8.00 x 21.50
801254-056	Drawer face	12.00 x 21.50
801254-066	Drawer face	4.75 x 33.00
801254-076	Drawer face	8.00 x 10.50
801254-086	Drawer face	12.00 x 10.50
801254-096	Drawer face	8.00 x 20.00
801254-106	Drawer face	12.00 x 20.00
801254-116	Drawer face	4.75 x 18.38
801254-126	Drawer face	6.75 x 27.50
801254-136	Drawer face	6.50 x 16.00
801254-146	Drawer face	8.00 x 60.75
801254-166	Drawer face	4.75 x 14.25
801254-176	Drawer face	8.00 x 9.00
801254 186	Drawer face	12.00 x 9.00
801254-196	Drawer face	7" X 33"

2005 390/396/Sky Deck XL

FURNITURE

Drawer Faces, Hickory

801254-013	Drawer face	8.00 x 14.50
801254-023	Drawer face	12.00 x 14.25
801254-033	Drawer face	4.75 x 21.50
801254-043	Drawer face	8.00 x 21.50
801254-053	Drawer face	12.00 x 21.50
801254-063	Drawer face	4.75 x 33.00
801254-073	Drawer face	8.00 x 10.50
801254-083	Drawer face	12.00 x 10.50
801254-093	Drawer face	8.00 x 20.00
801254-103	Drawer face	12.00 x 20.00
801254-113	Drawer face	4.75 x 18.38
801254-123	Drawer face	6.75 x 27.50
801254-133	Drawer face	6.50 x 16.00
801254-143	Drawer face	8.00 x 60.75
801254-163	Drawer face	4.75 x 14.25
801254-173	Drawer face	8.00 x 9.00
801254 183	Drawer face	12.00 x 9.00
801254-193	Drawer face	7.00" X 33.00"

Drawer Boxes

964906-01	Drawer box	2.75 x 6.00 x 18.00
964906-02	Drawer box	2.75 x 19.5 x 18.00
964906-15	Drawer box	2.57 x 12.25 x 18.00
964907-02	Drawer box	6.00 x 8.50 x 18.00
964907-03	Drawer box	6.00 x 19.50 x 18.00
964907-05	Drawer box	6.00 x 18.00 x 18.00
964907-07	Drawer box	6.00 x 12.25 x 22.00
964907-10	Drawer box	6.00 x 8.50 x 14.00
964909-01	Drawer box	10.00 x 8.50 x 18.00
964909-02	Drawer box	10.00 x 19.50 x 18.00
964909-03	Drawer box	10.00 x 12.25 x 18.00
964909-04	Drawer box	10.00 x 18.00 x 18.00
964909-05	Drawer box	10.00 x 12.25 x 22.00

2005 390/396/Sky Deck XL

FURNITURE, BATH

Bath Module, 390

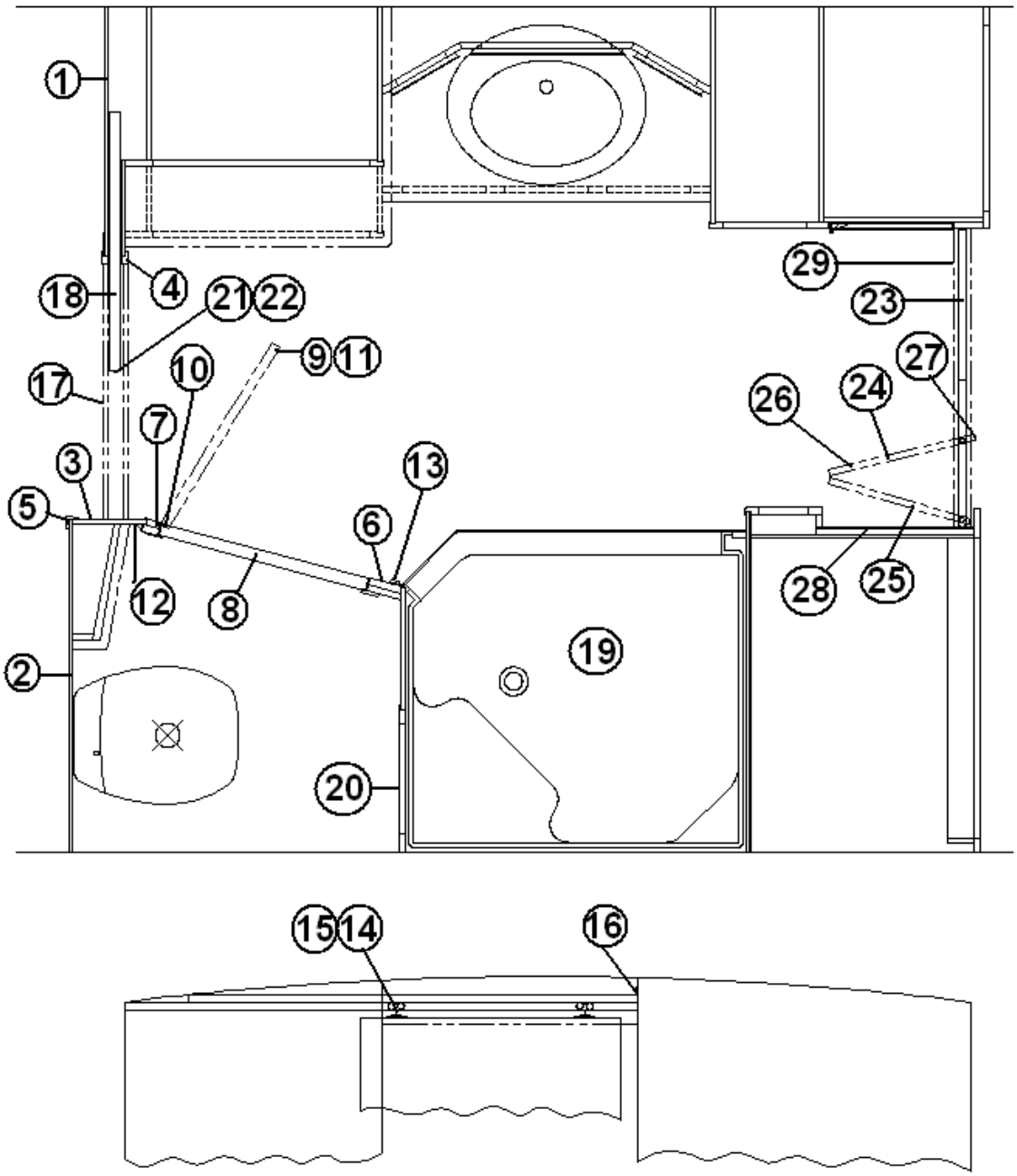

Part Numbers Are On The Next Page

2005 390/396/Sky Deck XL

FURNITURE, BATH

Bath Module, 390

1.	801273-02	PANEL, AFT REFER
2.	801273-03	PANEL, FWD STOOL ROOM
3.	801273-04	PANEL, HALL STOOL ROOM
4.	800815-023	STILE-AFT BATH PANEL, END
5.	800575-013	MOLDING CORNER 80"
6.	964819-003	JAMB-SWINGING BATH DOOR LH
7.	964820-003	JAMB-SWINGING BATH DOOR RH
8.	964821-003	JAMB-SWINGING BATH DOOR HEADER
9.	964813-003	DOOR-SWINGING 24.00" X 74.00"
10.	381692	HINGE-MORTISE 3” X 3” BRIGHT BRASS
11.	381684	LOCK SET LEVER PASSAGE BRASS
12.	801268-003	MOLDING-INSIDE CORNER
13.	964822-003	MOLDING-SHOWER STALL TRIM
14.	381443-01	SLIDING DOOR SET #71-222-5'
15.	381100	SLIDING DOOR GUIDE
16.	380041	BRACE 1" STANLEY CORNER
17.	964818-003	HEADER-SLIDING DOOR 29.81"
18.	964814-003	DOOR-SLIDING 29.25" X 71.5"
19.	203210-01	STALL-SHOWER FIBERGLASS
20.	702991	SHOWER DOOR-SNG.PIVOT W/135D P
21.	381691	POCKET DOOR PASSAGE LOCK
22.	381690	BOLT-FLUSH LEVER 12"
23.	380041	BRACE 1" STANLEY CORNER
24.	381690	BOLT-FLUSH LEVER 12"
25.	964815-003	DOOR-FOLDING 16.25" X 74.50”
26.	964919-003	DOOR FOLDING 16.94 X 74.50”
27.	381352	PULL, FLUSH, POLISHED BRASS
28.	964903-003	TOP-FOLDING DOOR
29.	964899-003	HEADER FOLDING DOOR
	801273-05	PANEL, AFT STOOL ROOM
	965067-003	STOP BLOCK, SLIDING DOOR
	381675	HARDWARE BI-FOLD BATH DOOR
	381724	ELBOW CATCH-BRASS SPRING LOADED

2005 390/396/Sky Deck XL

FURNITURE, BATH

Bath Module, 396

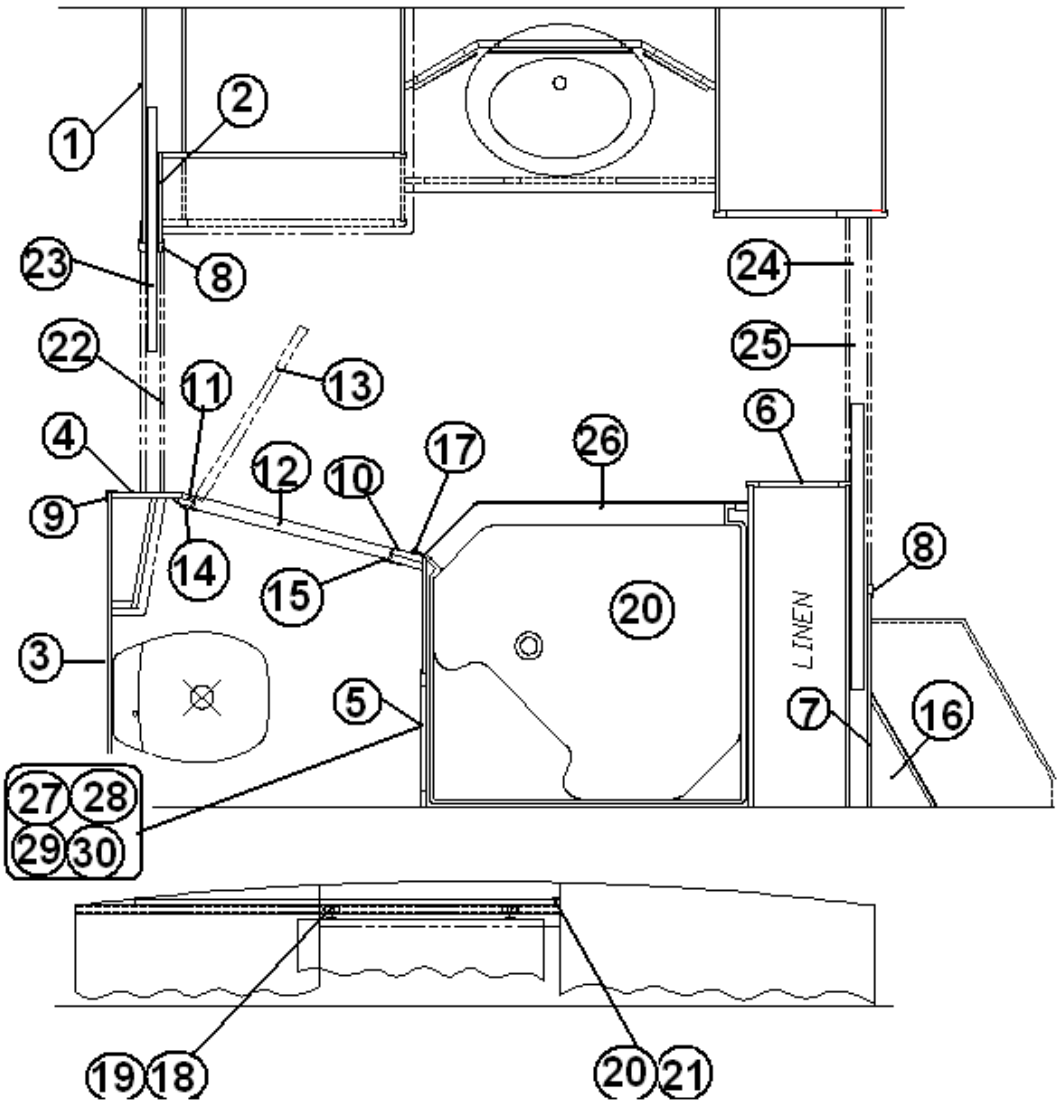

Part Numbers On the Next Page

2005 390/396/Sky Deck XL

FURNITURE, BATH

Bath Module, 396

1.	801273-02	PANEL, AFT REFER
2.	801273-06	PANEL, FWD LAUNDRY
3.	801273-03	PANEL, FWD STOOL ROOM
4.	801273-04	PANEL, HALL STOOL ROOM
5.	702991	SHOWER DOOR-SNG.PIVOT
6.	965323	R.S. LINEN CABINET ASSY
7.	801273-15	PANEL-FWD BEDROOM RS
8.	800815-023	STILE-AFT BATH PNL END
9.	800575-013	MOLDING CORNER 80"
10.	964819-003	JAMB-SWINGING BATH DOOR LH
11.	964820-003	JAMB-SWINGING BATH DOOR RH
12.	964821-003	JAMB-SWINGING BATH DR.HEADer
13.	964813-003	DOOR-SWINGING 24.00" X 74.00"
14.	381692	HINGE-MORTISE 3X3 BRIGHT BRASS
15.	381684	LOCK SET LEVER PASSAGE BRASS
16.	965423	VANITY MIRROR ASSY
17.	964822-003	MOLDING-SHOWER STALL TRIM 78.5
18.	381443-02	BUMPER STOP
19.	381100	SLIDING DOOR GUIDE
20.	964923	SHOWER STAND ASSY
21.	380041	BRACE 1" STANLEY CORNER
22.	964818-003	HEADER-SLIDING DOOR 29.81
23.	964814-003	DOOR-SLIDING 29.25" X 71.5"
24.	965165-003	HEADER- SLIDING DOOR AFT
25.	965164-003	DOOR-SLIDING 34.00 X 71.50
26.	203210-01	STALL-SHOWER FIBERGLASS
27.	381691	POCKET DOOR PASSAGE LOCK
28.	381690	BOLT-FLUSH LEVER 12"PB
29.	965067-003	STOP BLOCK, SLIDING DOOR
30.	965207-003	DOOR GUIDE/STOP BLOCK
	801178-06	MOLDING-FLAT .81" ASCOT
	801268-005	MOLDING INSIDE CORNER, MAPLE

2005 390/396/Sky Deck XL

FURNITURE, BATH

Bath Module, 390 Sky Deck

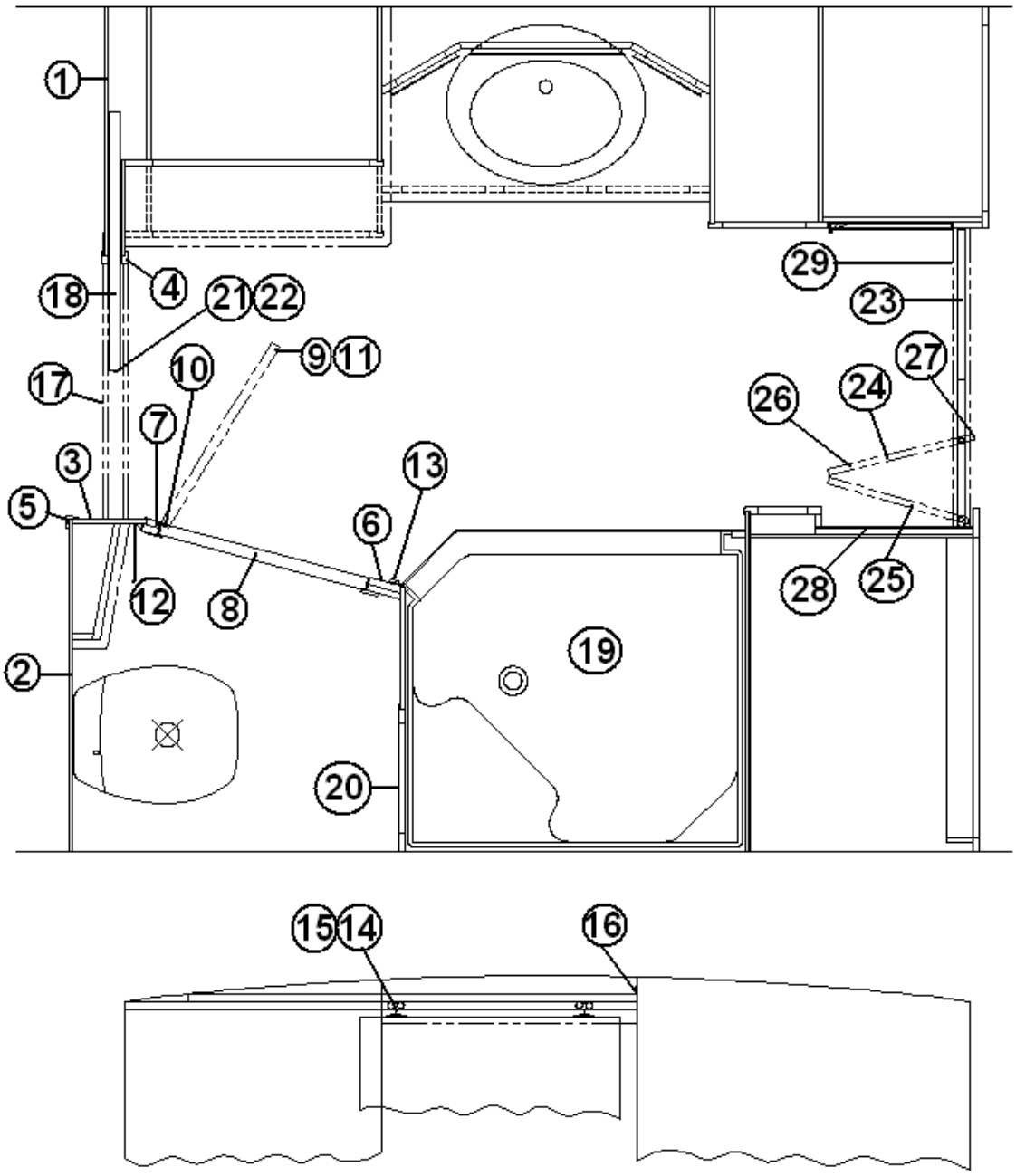

Part Numbers Are On The Next Page

2005 390/396/Sky Deck XL

FURNITURE, BATH

Bath Module, 390 Sky Deck

1.	801273-20	PANEL, AFT REFER
2.	801273-21	PANEL, FWD STOOL ROOM
3.	801273-22	PANEL, HALL STOOL ROOM
4.	800815-026	STILE-AFT BATH PANEL, END
5.	800575-016	MOLDING CORNER 80"
6.	964819-006	JAMB-SWINGING BATH DOOR LH
7.	964820-006	JAMB-SWINGING BATH DOOR RH
8.	964821-006	JAMB-SWINGING BATH DOOR HEADER
9.	964813-006	DOOR-SWINGING 24.00" X 74.00"
10.	381692	HINGE-MORTISE 3” X 3” BRIGHT BRASS
11.	381684	LOCK SET LEVER PASSAGE BRASS
12.	801268-006	MOLDING-INSIDE CORNER
13.	964822-006	MOLDING-SHOWER STALL TRIM
14.	381443-01	SLIDING DOOR SET #71-222-5'
15.	381100	SLIDING DOOR GUIDE
16.	380041	BRACE 1" STANLEY CORNER
17.	964818-006	HEADER-SLIDING DOOR 29.81"
18.	964814-006	DOOR-SLIDING 29.25" X 71.5"
19.	203210-01	STALL-SHOWER FIBERGLASS
20.	702991	SHOWER DOOR-SNG.PIVOT W/135D P
21.	381691	POCKET DOOR PASSAGE LOCK
22.	381690	BOLT-FLUSH LEVER 12"
23.	380041	BRACE 1" STANLEY CORNER
24.	381690	BOLT-FLUSH LEVER 12"
25.	964815-006	DOOR-FOLDING 16.25" X 74.50”
26.	964919-006	DOOR FOLDING 16.94 X 74.50”
27.	381352	PULL, FLUSH, POLISHED BRASS
28.	964903-006	TOP-FOLDING DOOR
29.	964899-006	HEADER FOLDING DOOR
	381740	Cap, Bi-Fold Door
	801273-05	PANEL, AFT STOOL ROOM
	965067-006	STOP BLOCK, SLIDING DOOR
	381675	HARDWARE BI-FOLD BATH DOOR
	381724	ELBOW CATCH-BRASS SPRING LOADED

2005 390/396/Sky Deck XL

FURNITURE, BATH

Lavatory Cabinet, 390/396

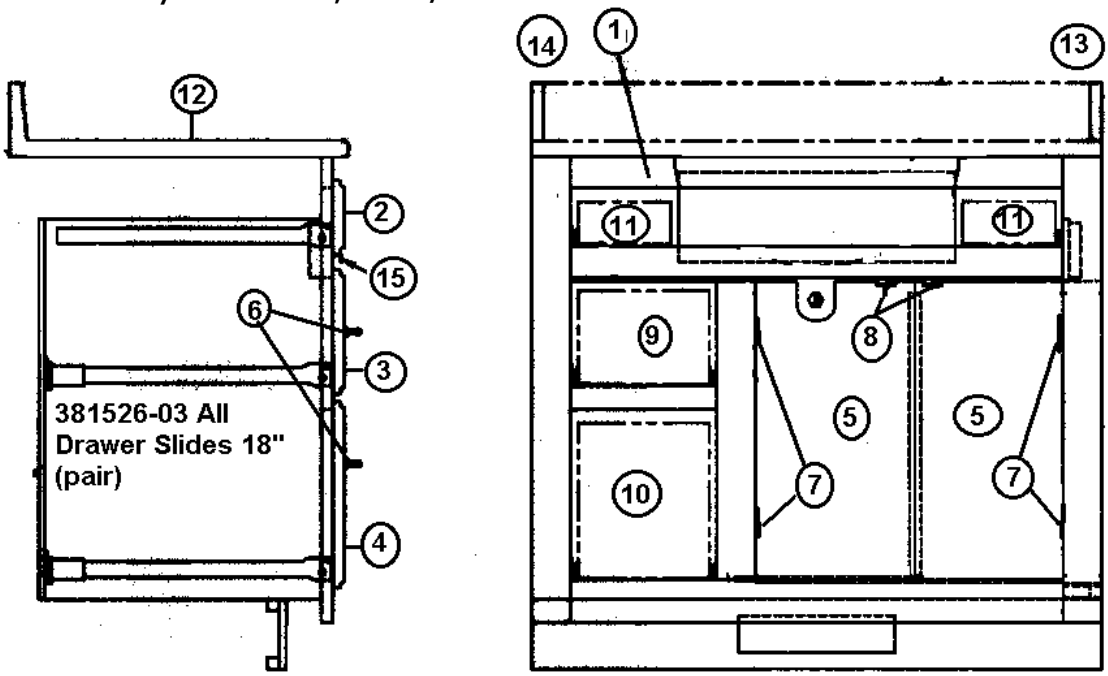

964828-03	Lavatory Cabinet Assembly, 390/396
1. 964775-003	Face frame, Lavatory cabinet
2. 801254-063	Drawer face, 4.75” x 33.00”
3. 801254-073	Drawer face, 8.00” x 10.50”
4. 801254-083	Drawer face, 12.00” x 10.50”
5. 801253-053	Door, raised panel, 10.5” x 20.50”
6. 381835	HANDLE-CHROME/BRASS
7. 381683	Hinge, hidden
8. 381228-01	Door grabber catch
9. 964907-02	Drawer box, 6.00” x 8.50” x 18.00”
10. 964909-01	Drawer box, 10.00” x 8.50” x 18.00”
11. 964906-01	Drawer box, 2.75” x 6.00’ x 18.00”
12. 601896	Lavatory top & bowl, Corian, Midnight
12. 601896-01	Lavatory top & bowl, Corian, Sandstone
12. 601896-02	Lavatory top & bowl, Corian, Everest
13. 601740-02	Side splash, Corian, RH
14. 601741-02	Side splash, Corian, LH
15. 385940	Mirror pull, brass
381526-03	DRW SLIDE-950-RV 18" 450MM PER
381526-06	BRACKET ADJUSTABLE REAR

2005 390/396/Sky Deck XL

FURNITURE, BATH

Lavatory Cabinet, 390 Sky Deck

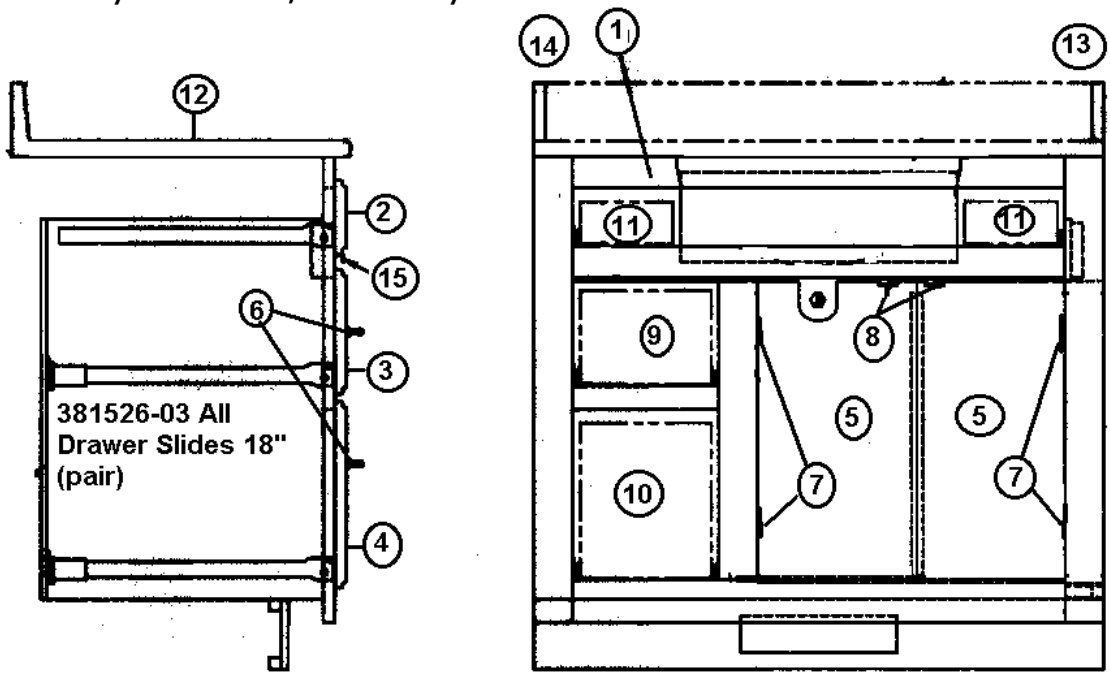

964828-02	Lavatory Cabinet, 390 XL Sky Deck
1. 964775-006	Face frame, Lavatory cabinet
2. 801254-066	Drawer face, 4.75” x 33.00”
3. 801254-076	Drawer face, 8.00” x 10.50”
4. 801254-086	Drawer face, 12.00” x 10.50”
5. 801253-056	Door, raised panel, 10.5” x 20.50”
6. 381835	HANDLE-CHROME/BRASS
7. 381683	Hinge, hidden
8. 381228-01	Door grabber catch
9. 964907-02	Drawer box, 6.00” x 8.50” x 18.00”
10. 964909-01	Drawer box, 10.00” x 8.50” x 18.00”
11. 964906-01	Drawer box, 2.75” x 6.00’ x 18.00”
12. 965634	Lavatory top, Laminated, Sky Deck
12. 203286-01	Lavatory bowl, Sky Deck
13. 601740-02	Side splash, Corian, RH
14. 601741-02	Side splash, Corian, LH
15. 385940	Mirror pull, brass

2005 390/396/Sky Deck XL

FURNITURE, BATH

Medicine Cabinet, 390/396

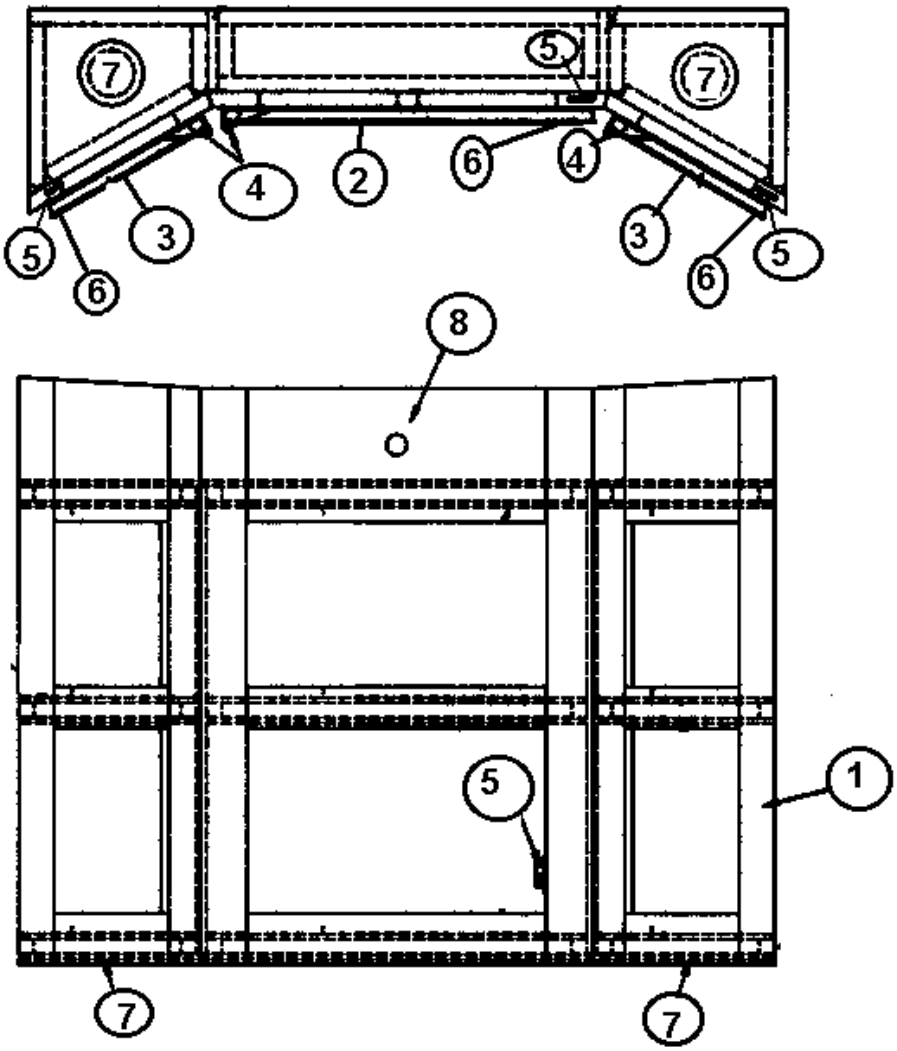

	964829	Medicine Cabinet, 390/396 XL
1.	964776-003	Face frame, Medicine cabinet
2.	372203-11	Glass, safety, mirrored, 17” x 21.25”
3.	372203-25	Glass, safety, mirrored, 7.50” x 21.25”
4.	381836	Hinge, bright brass
5.	381228-01	Door grabber catch
6.	385940	Mirror pull, brass
7.	511477	Spot light, Brass halogen
8.	511492	Light, medicine cabinet

2005 390/396/Sky Deck XL

FURNITURE, BATH

Linen Cabinet, 390/396

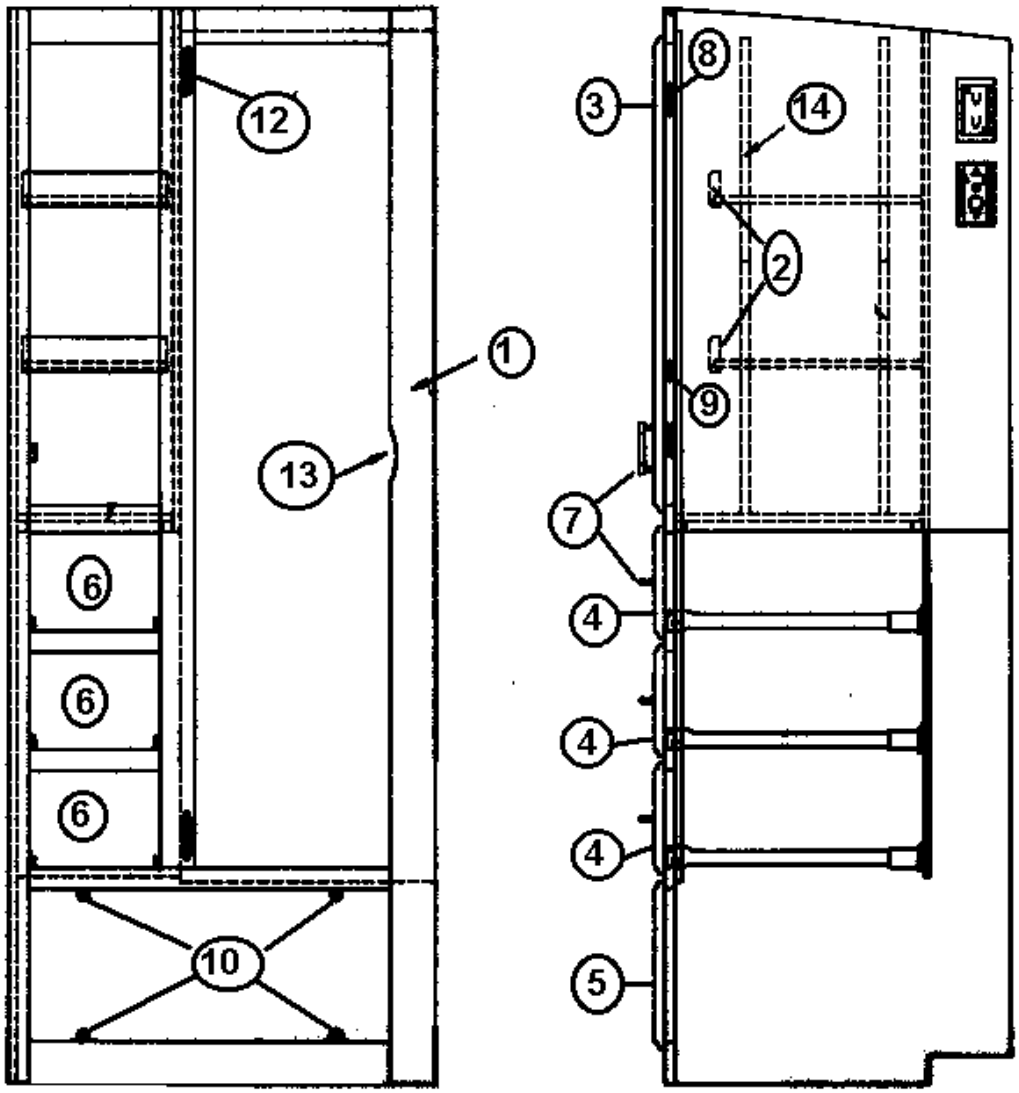

Part Numbers on the Next Page

FURNITURE, BATH

Linen Cabinet, 390/396

965785		Linen Cabinet Assembly 390/396 XL
1.	964778-003	Face frame, linen cabinet
2.	964832-003	Shelf facer, linen cabinet
3.	801253-063	Door, raised panel, 10.50” x 34.00”
4.	801254-073	Drawer face, 8.00” x 10.50”
5.	801255-013	Door, louvered, 27.00” x 12.00”
6.	964907-02	Drawer box, 6.00” x 8.50” x 18.00”
7.	381835	HANDLE-CHROME/BRASS
8.	381683	Door hinges, hidden
9.	381228-01	Door grabber catch
10.	380074	Bull dog catch
11.	372203-26	Glass, safety mirror, 13.62” x 58.50”
12.	385935	Brass pivot hinge
13.	385940	Mirror pull, Brass
14.	381527	Speedy shelf strips
	381526-03	DRW SLIDE-950-RV 18" 450MM PER
	381526-06	BRACKET ADJUSTABLE REAR 251
	381603	PULL, THREE FINGERS BRASS

2005 390/396/Sky Deck XL

FURNITURE, BATH

Wardrobe Assembly, Sliding Door 390 XL

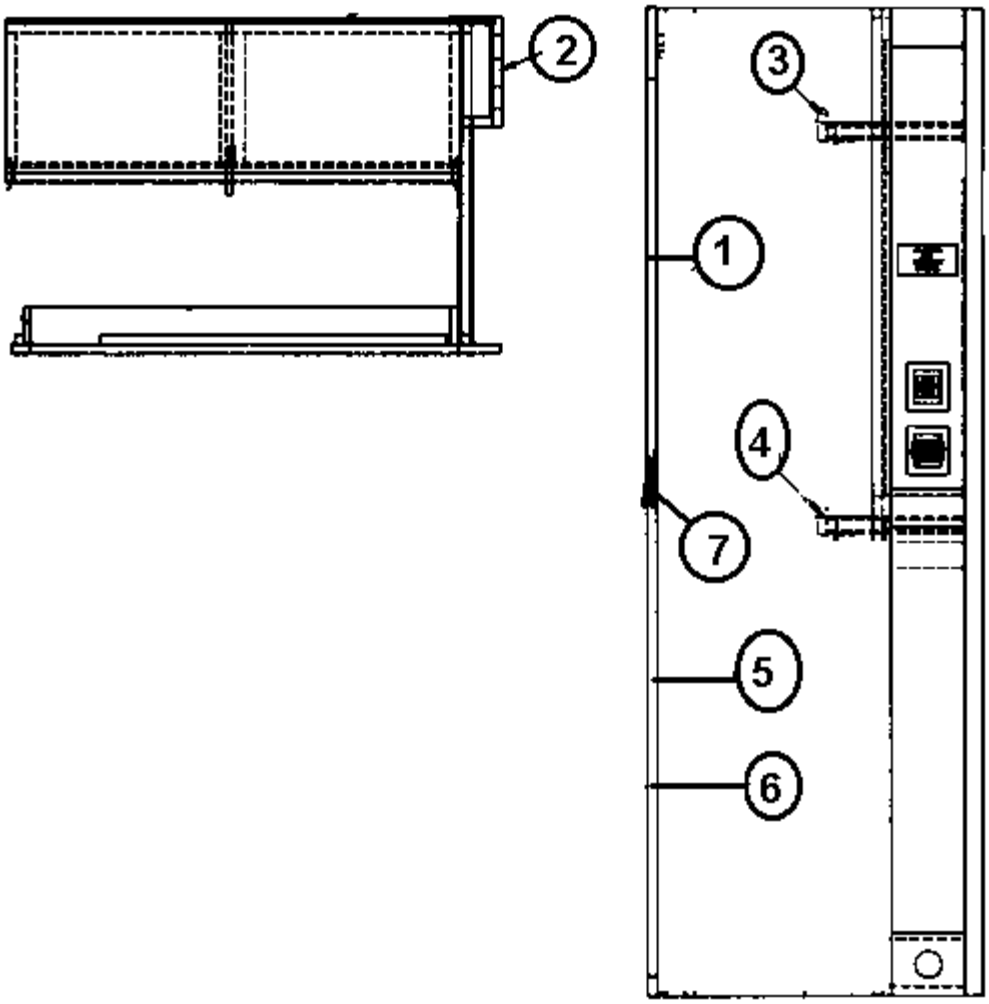

	964843	Wardrobe Assembly, Sliding Door
1.	964779-003	Face frame, RS Wardrobe
2.	964789-003	Face frame, Center panel
3.	964824-003	Stile, wardrobe shelf, front upper
4.	964825-003	Stile, wardrobe shelf, front lower
5.	381643-02	Door, sliding Wardrobe 34” x 73”
6.	371262-68	Safety mirror, 17.5” x 70.38”
7.	381643-01	Travel catch, wardrobe doors
	381228	CATCH GRABBER DOOR

2005 390/396/Sky Deck XL

FURNITURE, BATH

Storage Cabinet, Stool Room, 390/396

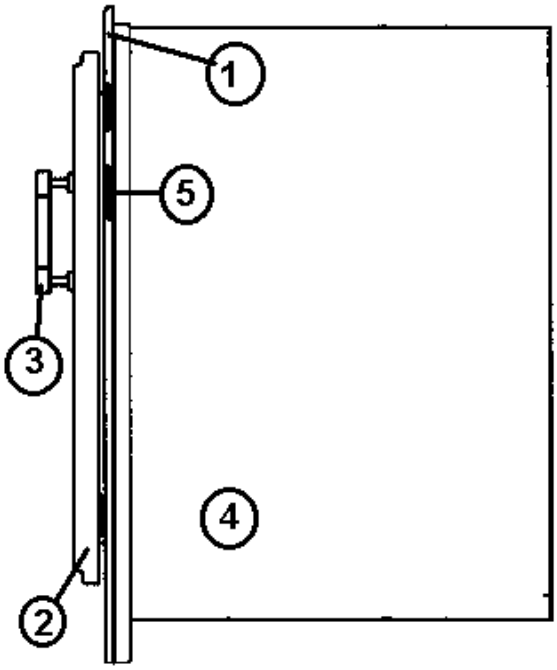

	964867	Storage Cabinet Assembly, Stool Room
1.	964791-003	Face frame, water closet
2.	801253-033	Door, raised panel, 14.50” x 16.25”
3.	381835	HANDLE-CHROME/BRASS
4.	381683	Door hinges, hidden
5.	381228-01	Door grabber catch
	381688	RUBBER BUMP ON
	381228-01	CATCH GRABBER DOOR
	964826-003	STILE-MIRROR TOP TRIM

2005 390/396/Sky Deck XL

FURNITURE, BATH

Magazine Rack, 390/396

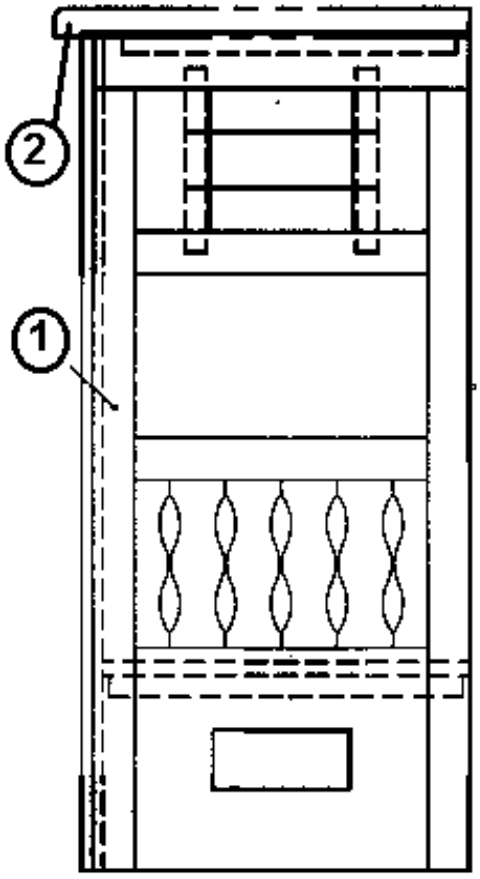

965087-003	Magazine rack, bath, Hickory
1. 601899	Top, bath magazine rack, Midnight
2. 601899-01	Top, bath magazine rack, Sandstone
2. 601899-02	Top, bath magazine rack, Everest

2005 390/396/Sky Deck XL

FURNITURE, BATH

Laundry Cabinet, Lower 390/396

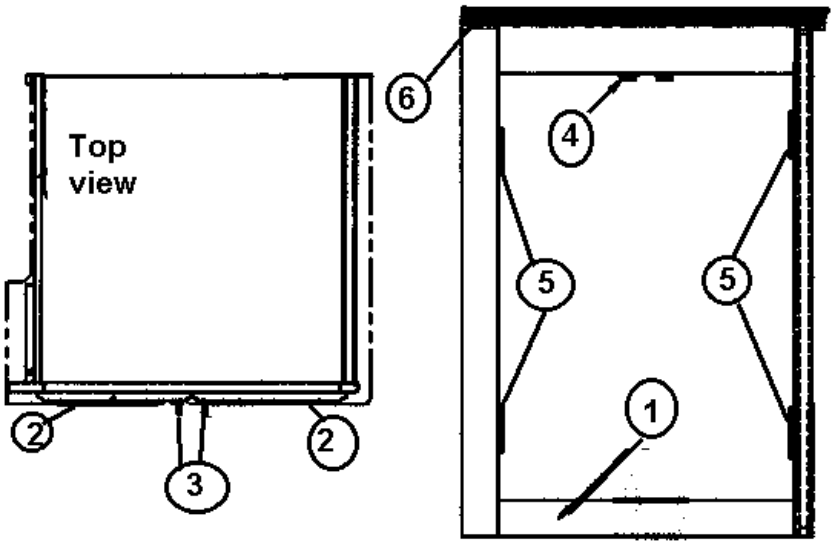

	964921-03	Laundry Cabinet, Lower 390/396 XL
1.	964774-003	Face frame, laundry cabinet
2.	801255-023	Door, louvered, 12.75” x 36.00”
3.	381835	HANDLE-CHROME/BRASS
4.	381228-01	Door grabber catch
5.	381683	Hinge, hidden
6.	601917	Top assembly, Midnight
6.	601917	Top assembly, Sandstone
6.	601917	Top assembly, Everest
	381688	BUMP ON

2005 390/396/Sky Deck XL

FURNITURE, BATH

Laundry Cabinet, Upper 390/396

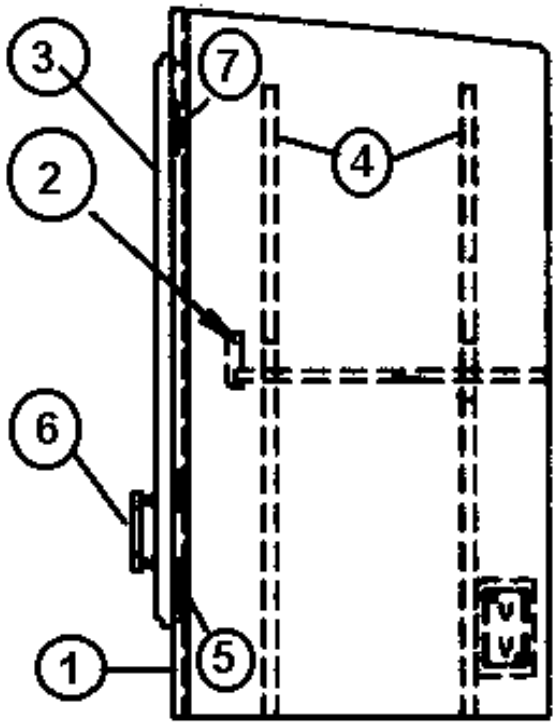

	964922-01	Laundry Cabinet, Upper
1.	964904-003	Face frame, laundry cabinet
2.	964834-003	Shelf facer laundry cabinet
3.	801253-113	Door, raised panel, 12.75” x 27.00’
4.	381527	Speedy shelf strips
5.	381228-01	Door grabber catch
6.	381835	HANDLE-CHROME/BRASS
7.	381683	Door hinges, hidden
8.	800573-003	Molding, door edge, 1 3/32” x 80”

2005 390/396/Sky Deck XL

FURNITURE, BATH

Chest of Drawers, 390

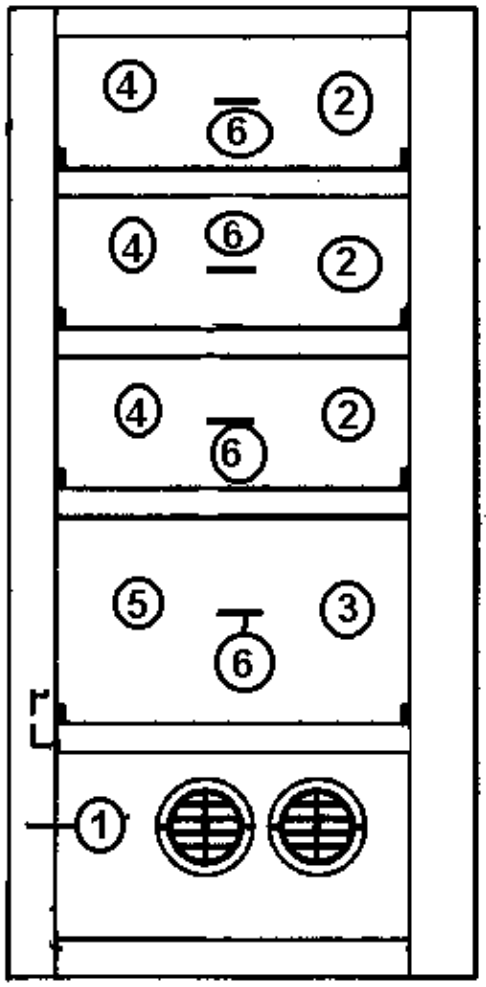

	965784	Chest of Drawers, 390 XL
1.	965786-003	Face frame, chest of drawers
2.	964907-05	Drawer box, 6.00” x 18.00” x 18.00”
3.	964909-04	Drawer box, 10.00” x 18.00” x 18.00”
4.	801254-093	Drawer face, 8.00” x 20.00”
5.	801254-103	Drawer face, 12.00’ x 20.00”
6.	381835	HANDLE-CHROME/BRASS
7.	381526-03	Drawer slides, 18”, not shown
8.	381526-06	Rear drawer slide bracket, not shown

FURNITURE, BATH

Linen Closet, 396

965323	R.S. LINEN CABINET ASSY
801273-19	PANEL-AFT R.S. LINEN
965322-003	FACE FRAME-R.S. LINEN CLOSET
381835	HANDLE-CHROME/BRASS
381683	DOOR HINGES - HIDDEN
801253-063	DOOR- RSD PNL- 10.50” X 34.00”
801254-073	DRAWER FACE, 8.00” X 10.50”
964832-003	SHELF FACER, LINEN CABINET
381527	SHELF STRIPS SPEEDY
964907-02	DRW BOX- 8.50 X 18.00 X 6.00
381526-03	DRW SLIDE-950-RV 18"
381526-06	BRACKET ADJUSTABLE REAR
800507-03	LAUAN, 3/8" X 4' X 8'
801258-003	PANEL-.5" HICKORY/HICKORY
801259-003	PANEL-.5" HICKORY/RAW G1S
381228-01	CATCH GRABBER DOOR
381754	MIRROR CLIP R2

2005 390/396/Sky Deck XL

FURNITURE, BATH

Vanity Mirror Assembly, 396

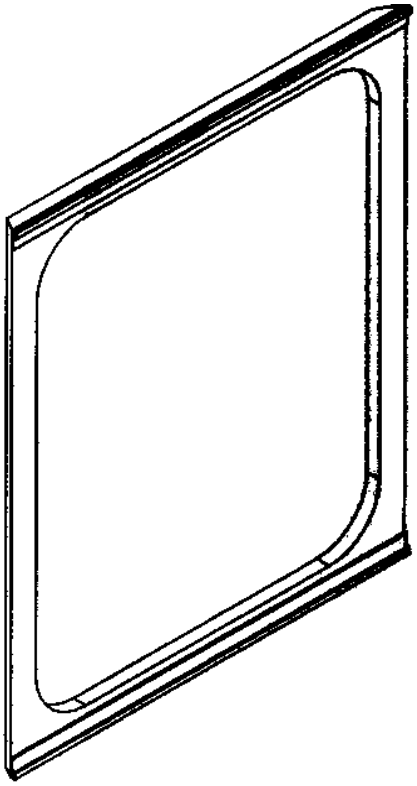

965423	Vanity Mirror Assembly, 396
801259-003	PANEL-.5" HICKORYK/RAW G1S
372203-29	GLASS SAFETY MIRRORED 16.00” X19.00”
372213	TRIM-BRIGHT CHROME 1/8"
381386	DUAL LOCK #170
381874	GLIDE-PLASTIC

2005 390/396/Sky Deck XL

FURNITURE, BATH

Linen Cabinet, 396

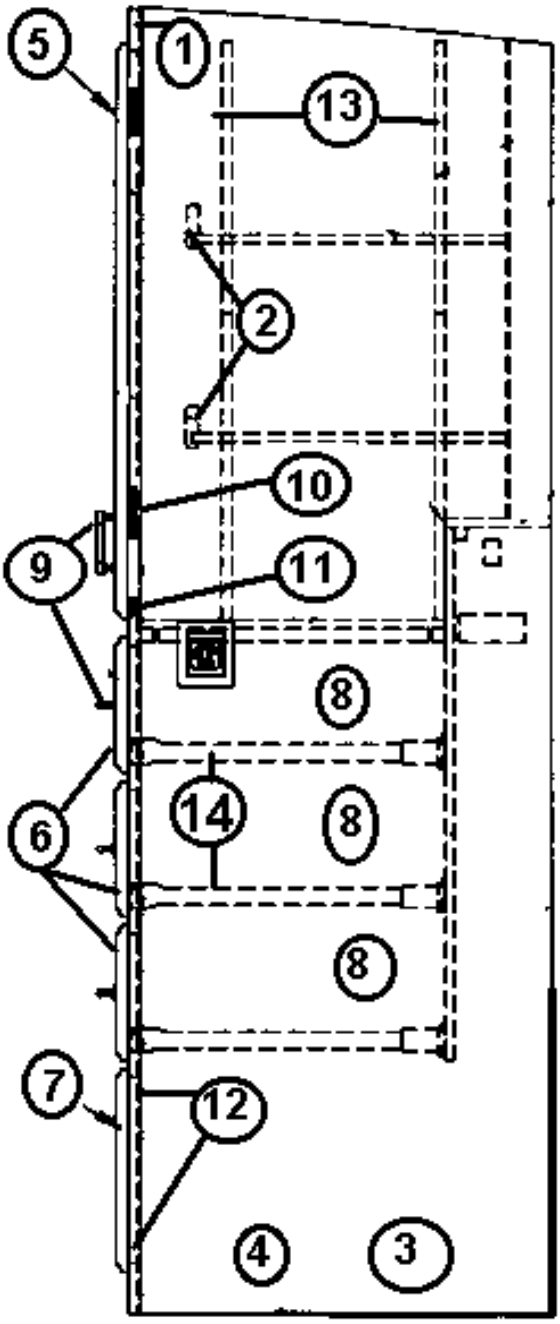

Part Numbers on the Next Page

2005 390/396/Sky Deck XL

FURNITURE, BATH

Linen Cabinet, 396

965168-01	Linen Cabinet Assembly 396 XL
1. 965158-003	Face frame, linen cabinet
2. 965159-003	Facer shelf, linen cabinet
3. 801273-14	Panel, forward linen cabinet
4. 801273-16	Panel, aft, linen cabinet
5. 801253-123	Door, raised panel, 14.25” x 34.00”
6. 801254-013	Drawer face, 8.00” x 14.25”
7. 801255-043	Door, louvered, 14.25” x 12.00”
8. 964907-04	Drawer box, 12.25” x18.00’ x 6.00”
9. 381835	HANDLE-CHROME/BRASS
10. 381683	Door hinges
11. 381228-01	Door grabber catches
12. 381074	Bull dog catch
13. 381527	Speedy shelf strips
14. 381526-03	Drawer slide, 18”, pair
14. 381526-06	BRACKET ADJUSTABLE REAR

2005 390/396/Sky Deck XL

FURNITURE, BATH

Lavatory Cabinet, 390 Sky Deck

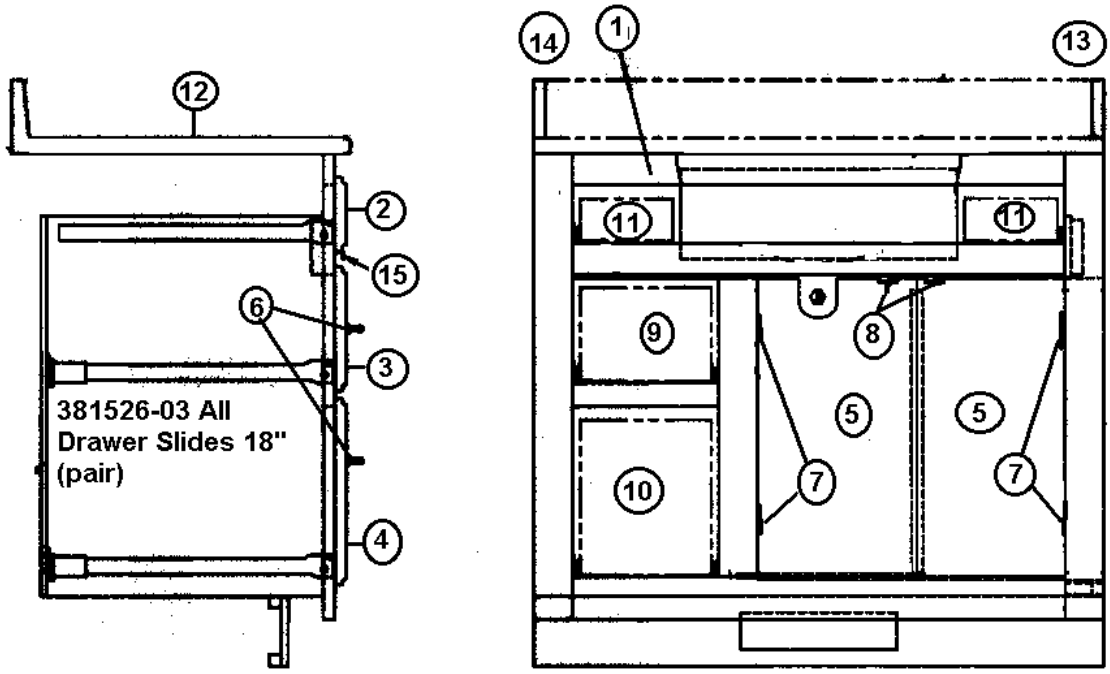

964828-02	Lavatory Cabinet, Sky Deck
1. 964775-006	Face frame, Lavatory cabinet
2. 801254-066	Drawer face, 4.75” x 33.00”
3. 801254-076	Drawer face, 8.00” x 10.50”
4. 801254-086	Drawer face, 12.00” x 10.50”
5. 801253-056	Door, raised panel, 10.5” x 20.50”
6. 381835	HANDLE-CHROME/BRASS
7. 381683	Hinge, hidden
8. 381228-01	Door grabber catch
9. 964907-02	Drawer box, 6.00” x 8.50” x 18.00”
10. 964909-01	Drawer box, 10.00” x 8.50” x 18.00”
11. 964906-01	Drawer box, 2.75” x 6.00’ x 18.00”
12. 965634	Lavatory top, Laminated, Sky Deck
12. 203286-01	Lavatory bowl, Sky Deck
13. 601740-02	Side splash, Corian, RH
14. 601741-02	Side splash, Corian, LH
15. 385940	Mirror pull, brass

2005 390/396/Sky Deck XL

FURNITURE, BATH

Magazine Rack, 390 Sky Deck

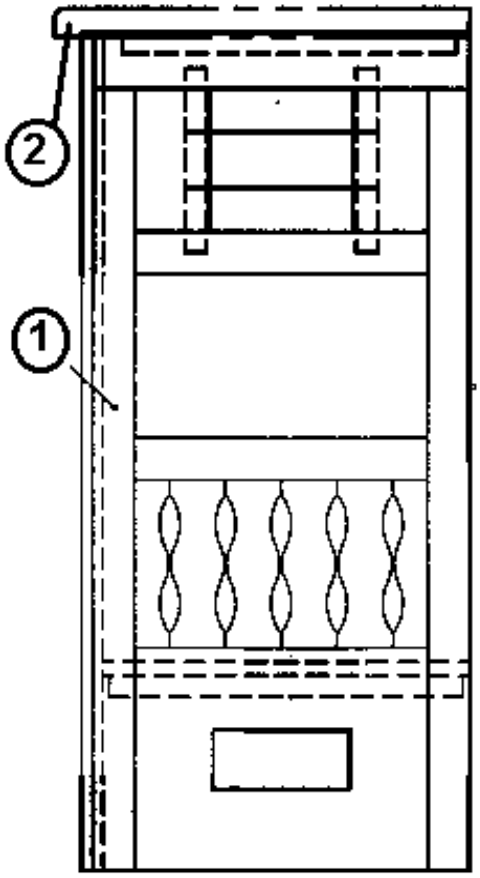

965088-01	Magazine Rack
1. 965087-006	Magazine rack, bath, Oak
2. 965697	Top, bath magazine rack Sky Deck
964280-006	COUNTER TOP EDGE MOLDING

2005 390/396/Sky Deck XL

FURNITURE, BATH

Medicine Cabinet, 390 Sky Deck

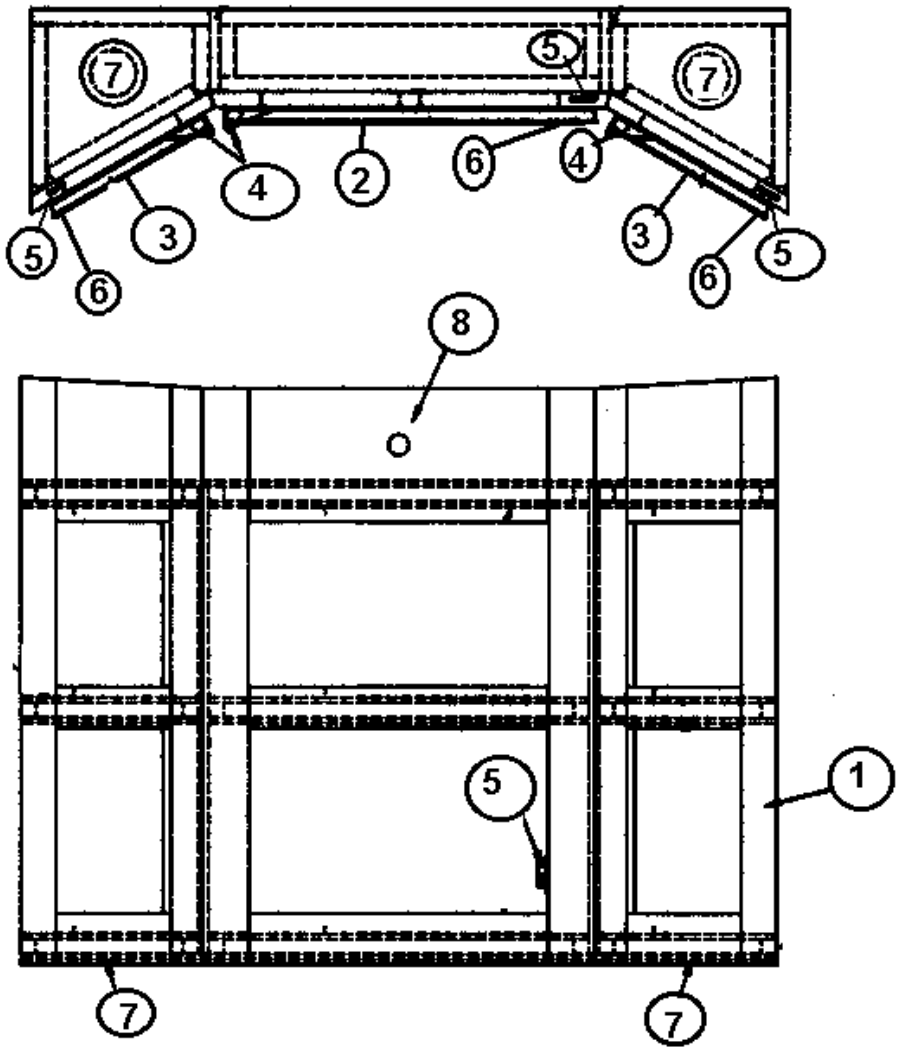

	964829	Medicine Cabinet
1.	964776-006	Face frame, Medicine cabinet
2.	372203-11	Glass, safety, mirrored, 17” x 21.25”
3.	372203-25	Glass, safety, mirrored, 7.50” x 21.25”
4.	381836	Hinge, bright brass
5.	381228-01	Door grabber catch
6.	385940	Mirror pull, brass
7.	511477	Spot light, Brass halogen
8.	511492	Light, medicine cabinet

2005 390/396/Sky Deck XL

FURNITURE, BATH

Linen Cabinet, 390 Sky Deck

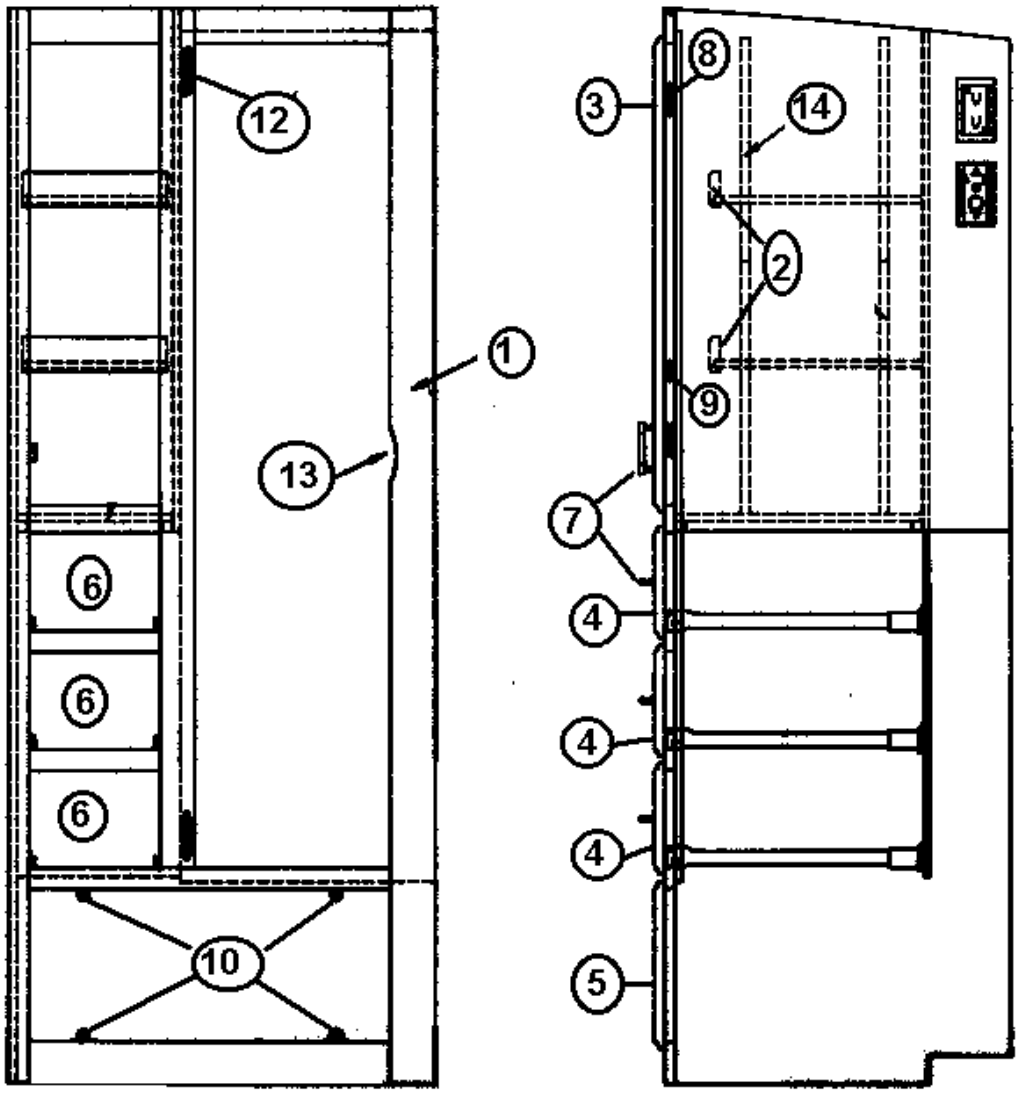

Part Numbers on the Next Page

FURNITURE, BATH

Linen Cabinet, 390 Sky Deck

965785-01	Linen Cabinet Assembly
1. 964778-006	Face frame, linen cabinet
2. 964832-006	Shelf facer, linen cabinet
3. 801253-066	Door, raised panel, 10.50” x 34.00”
4. 801254-076	Drawer face, 8.00” x 10.50”
5. 801255-016	Door, louvered, 27.00” x 12.00”
6. 964907-02	Drawer box, 6.00” x 8.50” x 18.00”
7. 381835	HANDLE-CHROME/BRASS
8. 381683	Door hinges, hidden
9. 381228-01	Door grabber catch
10. 380074	Bull dog catch
11. 372203-26	Glass, safety mirror, 13.62” x 58.50”
12. 385935	Brass pivot hinge
13. 385940	Mirror pull, Brass
14. 381527	Speedy shelf strips
381526-03	DRW SLIDE-950-RV 18" 450MM PER
381526-06	BRACKET ADJUSTABLE REAR 251
381603	PULL, THREE FINGERS BRASS

2005 390/396/Sky Deck XL

FURNITURE, BATH

Wardrobe W/Sliding Door, 390 Sky Deck

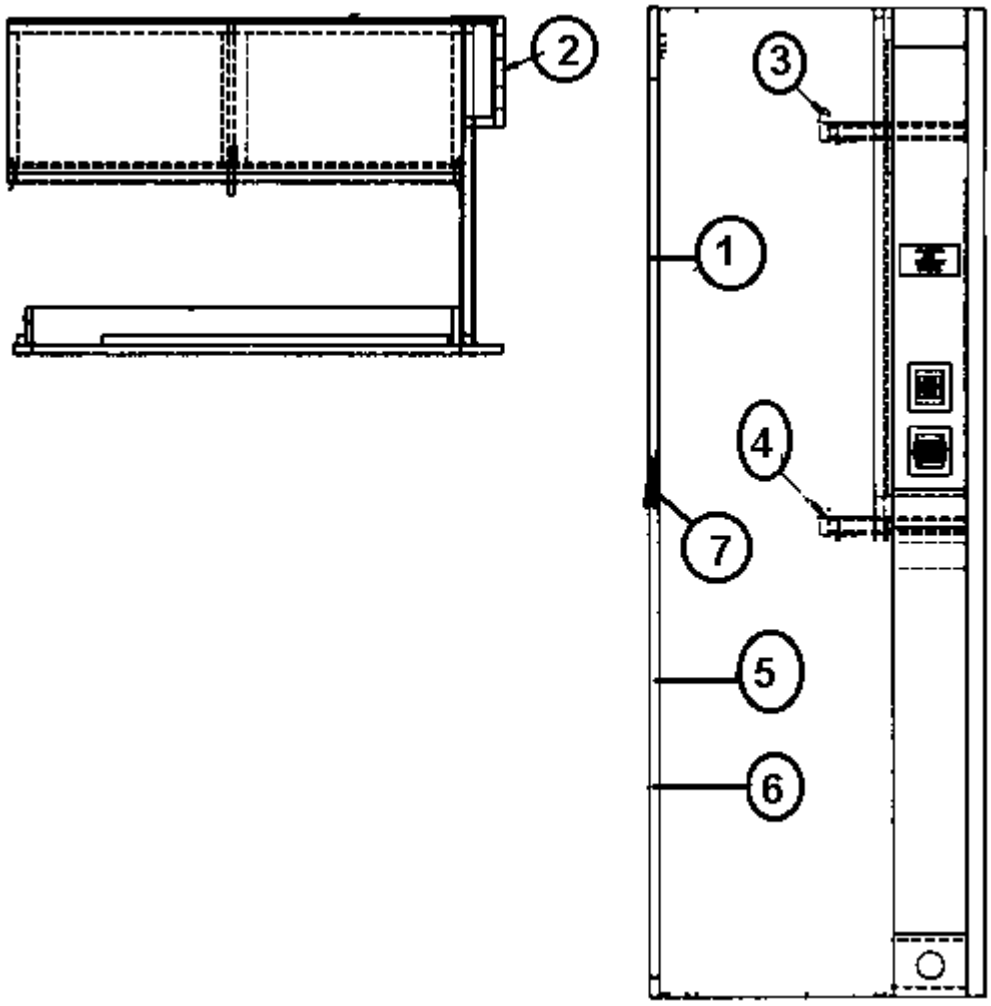

	964843-01	Wardrobe Assembly, Sliding Door
1.	964779-006	Face frame, RS Wardrobe
2.	964789-006	Face frame, Center panel
3.	964824-006	Stile, wardrobe shelf, front upper
4.	964825-006	Stile, wardrobe shelf, front lower
5.	381643-02	Door, sliding Wardrobe 34” x 73”
6.	371262-68	Safety mirror, 17.5” x 70.38”
7.	381643-01	Travel catch, wardrobe doors
	381228	CATCH GRABBER DOOR

2005 390/396/Sky Deck XL

FURNITURE, BATH

Storage Cabinet, Stool Room, 390 Sky Deck

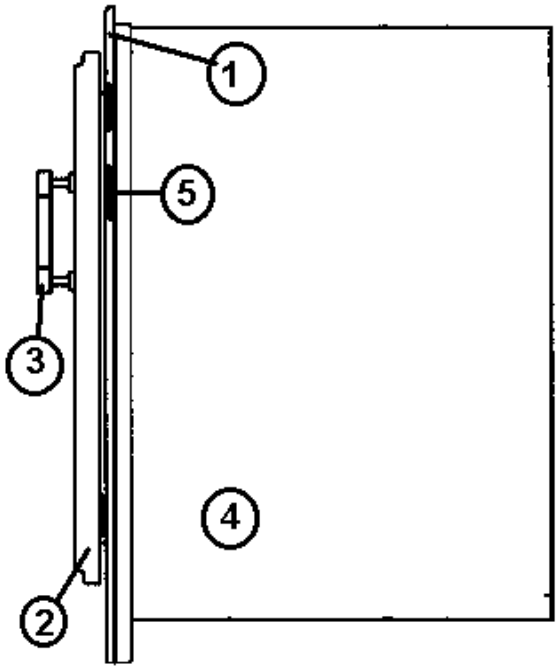

964867-01	Storage Cabinet, Stool Room
1. 964791-006	Face frame, water closet
2. 801253-036	Door, raised panel, 14.50” x 16.25”
3. 381835	HANDLE-CHROME/BRASS
4. 381683	Door hinges, hidden
5. 381228-01	Door grabber catch
381688	RUBBER BUMP ON
381228-01	CATCH GRABBER DOOR
964826-003	STILE-MIRROR TOP TRIM

2005 390/396/Sky Deck XL

FURNITURE, BATH

Laundry Cabinet, Lower 390 Sky Deck

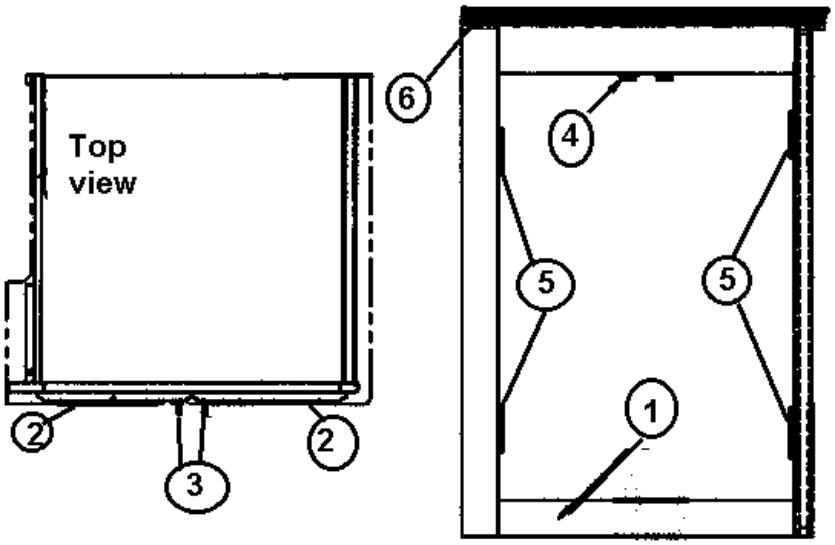

	964921-02	Laundry Cabinet, Lower Sky Deck
1.	964774-006	Face frame, laundry cabinet
2.	801255-026	Door, louvered, 12.75” x 36.00”
3.	381835	HANDLE-CHROME/BRASS
4.	381228-01	Door grabber catch
5.	381683	Hinge, hidden
6.	965636	Top assembly, 390 Sky Deck
	381688	BUMP ON

2005 390/396/Sky Deck XL

FURNITURE, BATH

Laundry Cabinet, Upper 390 Sky Deck

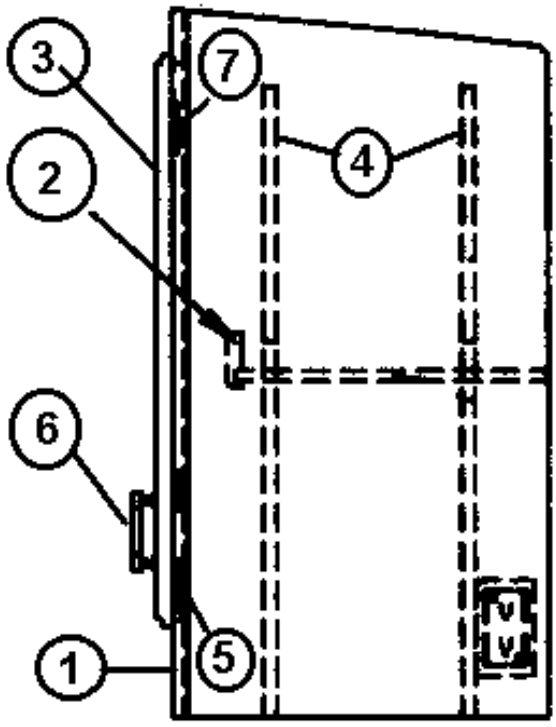

	965709	Laundry cabinet, upper
1.	964904-006	Face frame, laundry cabinet
2.	964834-006	Shelf facer laundry cabinet
3.	801253-116	Door, raised panel, 12.75” x 27.00’
4.	381527	Speedy shelf strips
5.	381228-01	Door grabber catch
6.	381835	HANDLE-CHROME/BRASS
7.	381683	Door hinges, hidden
8.	800573-006	Molding, door edge, 1 3/32” x 80”

2005 390/396/Sky Deck XL

FURNITURE, BATH

Chest of Drawers, 390 Sky Deck

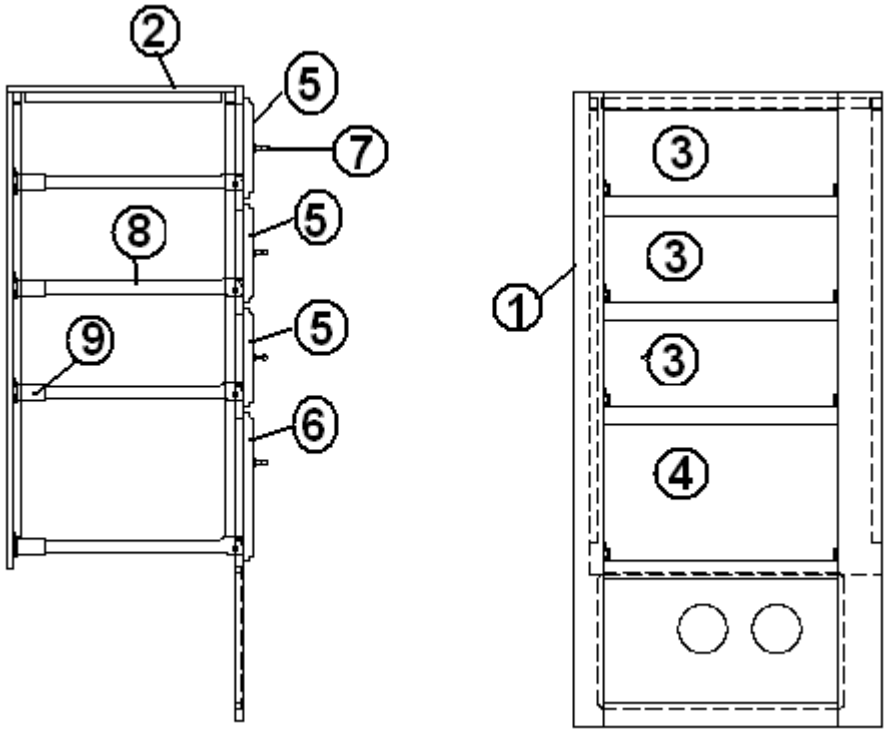

964925-02	Chest, drawer assembly
1. 964780-006	FACE FRAME-CHEST OF DWRS.
2. 801179-006	PANEL ½” G1S OAK/RAW 4' X 7'
3. 964907-05	DRW BOX- 18.00” X 18.00” X 6.00”
4. 964909-04	DRW BOX- 18.00” X 18.00” X 10.00”
5. 801254-096	DRAWER FACE, 8.00” X 20.00”
6. 801254-106	DRAWER FACE, 12.00” X 20.00”
7. 381835	HANDLE-CHROME/BRASS
8. 381526-03	DRW SLIDE-950-RV 18" 450MM PER
9. 381526-06	BRACKET ADJUSTABLE REAR

2005 390/396/Sky Deck XL

FURNITURE, BATH

Laundry Cabinet, Upper 390/396

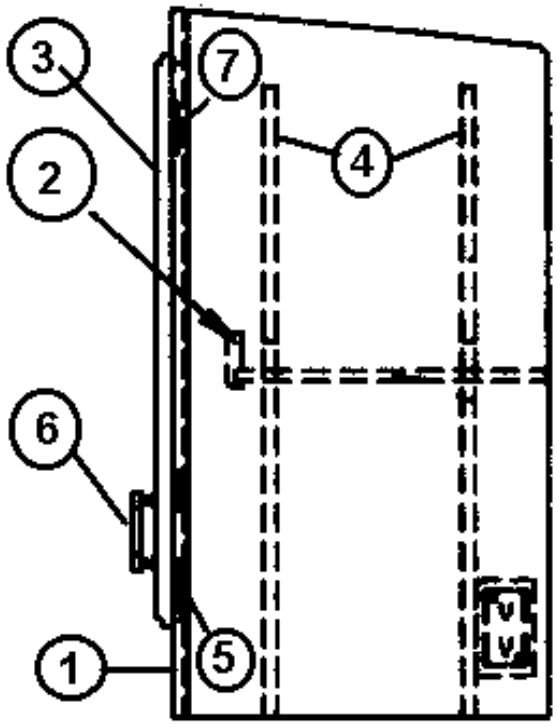

	964922-01	Laundry Cabinet, Upper 390, 369 XL
1.	964904-006	Face frame, laundry cabinet
2.	964834-006	Shelf facer laundry cabinet
3.	801253-116	Door, raised panel, 12.75” x 27.00’
4.	381527	Speedy shelf strips
5.	381228-01	Door grabber catch
6.	381835	HANDLE-CHROME/BRASS
7.	381683	Door hinges, hidden
8.	800573-006	Molding, door edge, 1 3/32” x 80”

2005 390/396/Sky Deck XL

FURNITURE, BEDROOM

Wardrobe, Curbside, 390

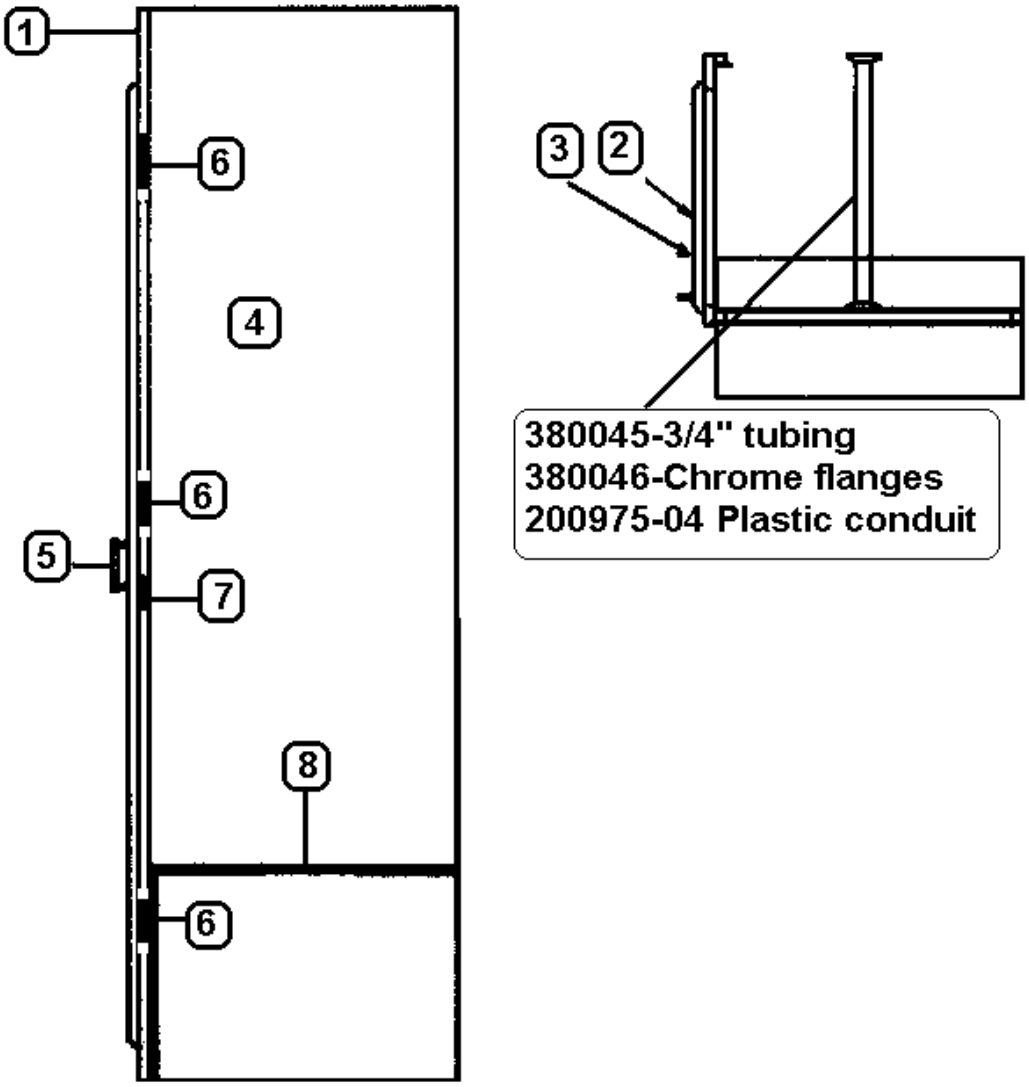

964846-01 Wardrobe Assembly, CS Rear-390 XL

1. 964782-003	Face frame, CS closet
2. 801256-013	Door, frame only, 16.5” x 69.00”
3. 372210-15	Glass, beveled 13.62” x 32.62”
4. 381754	Mirror retaining clips, Not Shown
5. 381835	HANDLE-CHROME/BRASS
6. 381683	Door hinges, hidden
7. 381228	Door grabber catch
8. 701538	Carpet liner, black

2005 390/396/Sky Deck XL

FURNITURE, BEDROOM

Wardrobe, Roadside, 390

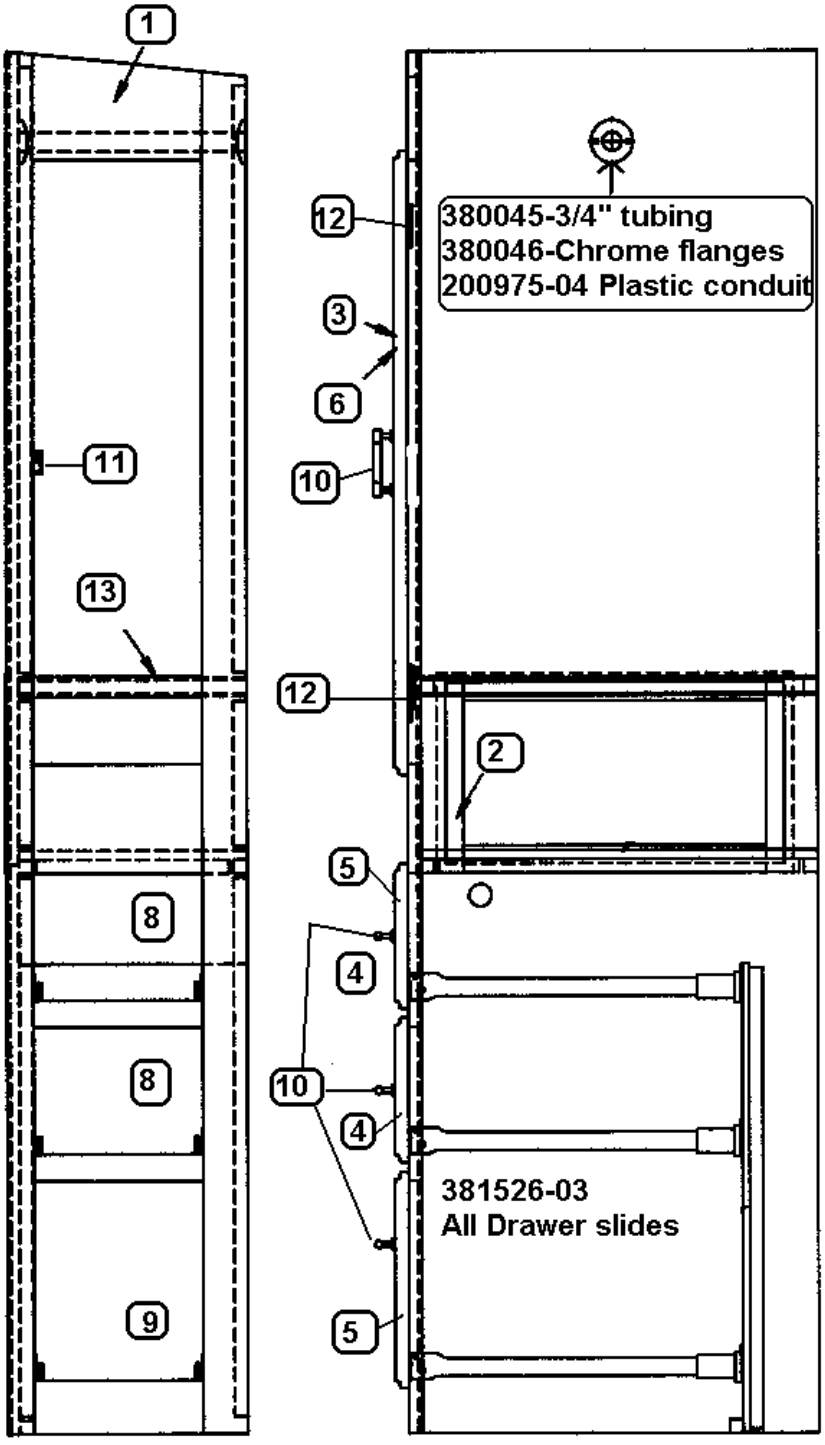

Part Numbers on the Next Page

FURNITURE, BEDROOM

Wardrobe, Roadside, 390

964847-01	Wardrobe Assembly, RS rear, 390 XL
1. 964783-003	Face frame, RS corner wardrobe
2. 964799-003	Face frame, Nightstand pocket
3. 801256-023	Door, frame only, 10.5” x 34.5”
4. 801254-073	Drawer face, 8.00” x 10.5”
5. 801254-083	Drawer face, 12.00” x 10.5”
6. 372210-14	Mirror, beveled, 7.62” x 31.62”
7. 381754	Mirror clips, not shown
8. 964907-02	Drawer box, 6” x 8.5” x 18”
9. 964907-01	Drawer box, 10” x 8.5” x 18”
10. 381835	HANDLE-CHROME/BRASS
11. 381228-01	Door grabber catch
12. 381683	Door hinges, hidden
13. 800573-013	Molding, door edge
381526-03	DRW SLIDE-950-RV 18" 450MM PER
381526-06	BRACKET ADJUSTABLE REAR 251

2005 390/396/Sky Deck XL

FURNITURE, BEDROOM

Roof locker Assembly, Roadside, 390/396

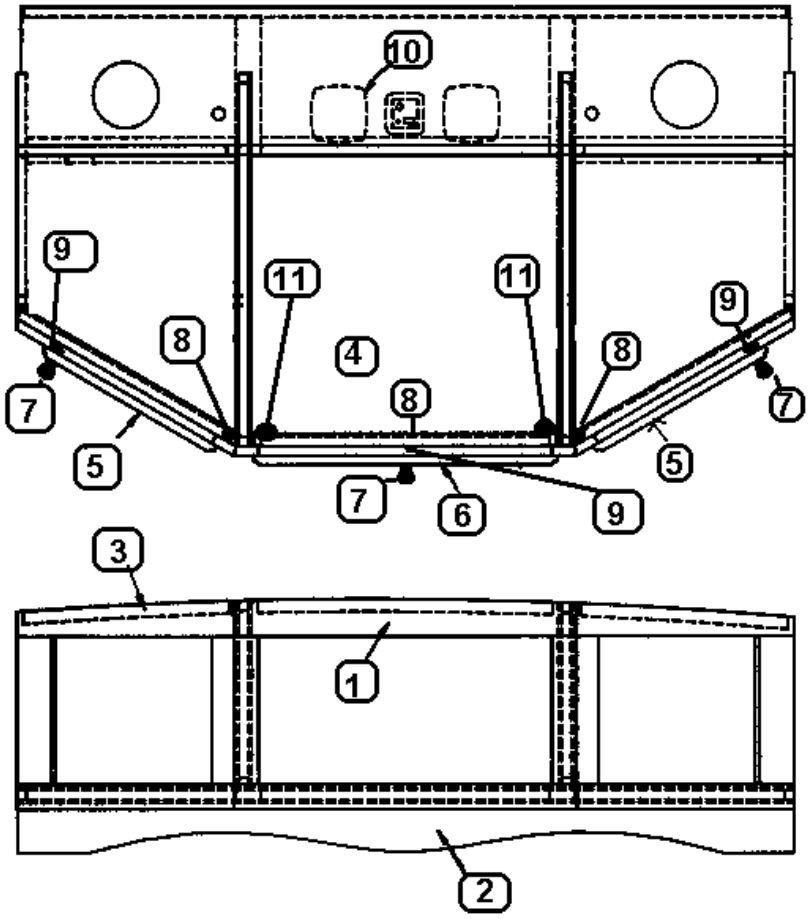

964848-01 Roof locker Assembly, RS rear, 390/396

1. 964784-003	Face frame, Rear liner locker
2. 964796-003	Rail, rear roof locker, light cover
3. 114812	Aluminum angle, 1” x 1”
4. 701538	Carpet liner, black
5. 801253-093	Door, raised panel, 16” x 12.75”
6. 801253-103	Door, raised panel, 24.5” x 12.75”
7. 381835	HANDLE-CHROME/BRASS
8. 391683	Door hinges, hidden
9. 381228-01	Door grabber catch
10. 511464-07	Speaker/Headphone system
11. 381147	Door support

2005 390/396/Sky Deck XL

FURNITURE, BEDROOM

Bed Assembly, 390/396

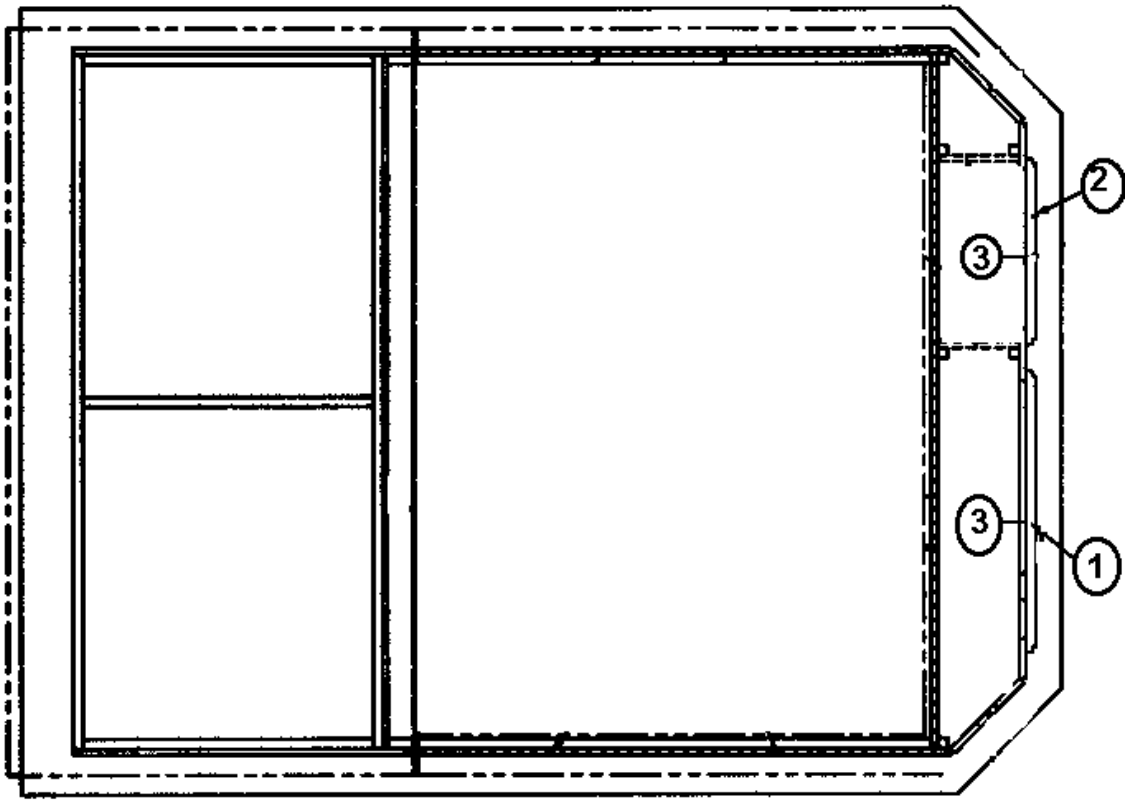

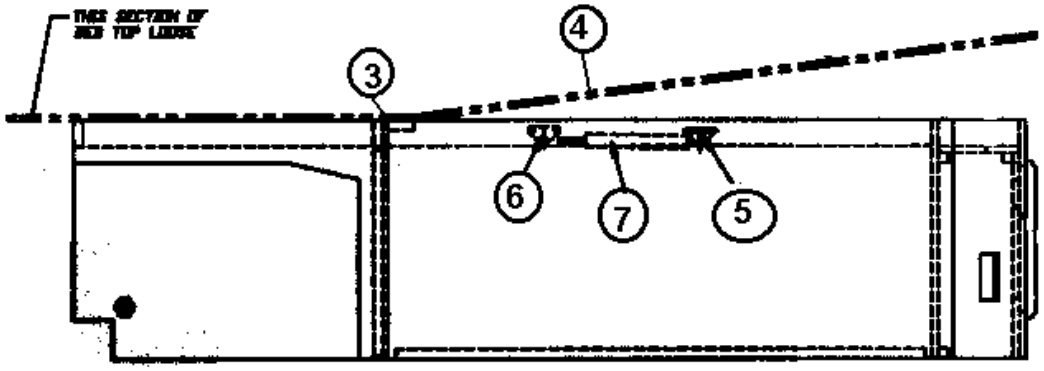

Part Numbers On The Next Page

FURNITURE, BEDROOM

Bed Assembly, 390/396

965172	Bed Assembly, 390/396
1. 800254-053	Drawer face, 12” x 21.50”
2. 800254-023	Drawer face, 12” x 14.25”
3. 381836	HINGE-BRITE BRASS
4. 965180	Bed top assembly
5. 381262	Bracket, prop, w/ball, straight
6. 381263	Bracket, prop, w/ball, angled
7. 381549	Gas spring, 150 lbs.
385940	Mirror pull, brass
380203-01	HINGE PIANO 1/8" PIN
381228-01	CATCH GRABBER DOOR
381228-01	CATCH GRABBER DOOR
365265-01	EDGEBANDING-5/8" NORTHERN OAK
114690	ANGLE BED CORNER
965605-03	Headboard, designated color scheme
371387	MIRROR HEADBOARD 10VG W/BEVEL
700811	BUTTON CAP, HANDY #36
700813	BUTTON, NAIL BOTTOM

2005 390/396/Sky Deck XL

FURNITURE, BEDROOM

Television Cabinet, 390

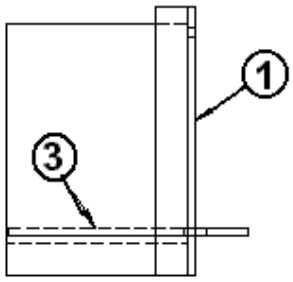

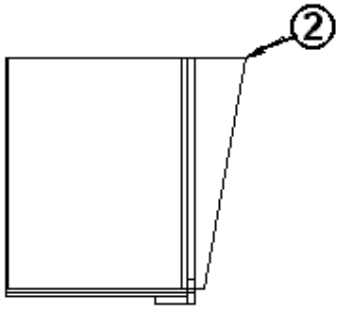

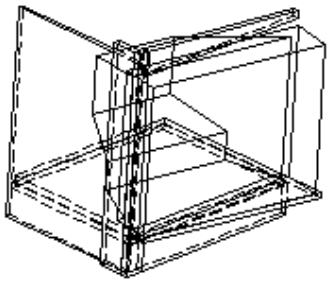

965782	TV Cabinet Assembly, 390 XL
1. 965783-003	Face frame, TV cabinet
2. 965787-003	Shelf extension, TV cabinet
3. 800506-06	¾” plywood
381310	Bracket, gas prop, upper
115139-01	BRACKET-RH TV MOUNT BEDROOM
115139-02	BRACKET-LH TV MOUNT BEDROOM
381569-04	SPRING GAS 20#
381262	BRACKET, PROP, W/BALL, ANGLED
114960	BRACKET-TV ROLLER SUPPORT
381443-05	CARRIER #7000
300133	WASHER EXTERNAL STAR 7/8ID 3INC

2005 390/396/Sky Deck XL

FURNITURE, BEDROOM

Wardrobe, Slide out, 396

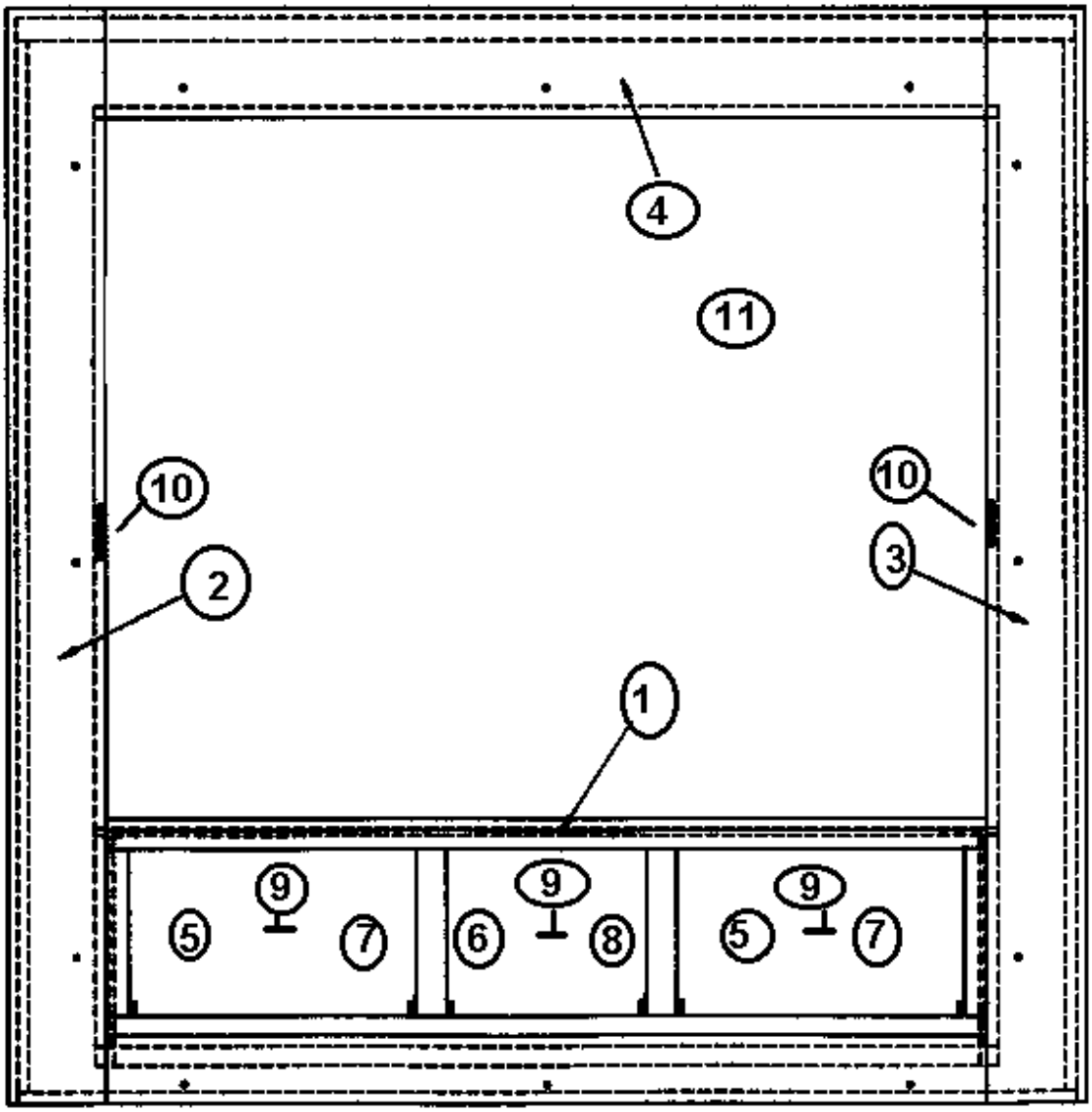

Part Numbers on the Next Page

FURNITURE, BEDROOM

Wardrobe, Slide out, 396

965173-01	Wardrobe Assembly, Slide out, CS Rear
1. 965166-003	Face frame, wardrobe, slide out
2. 965176-013	Stile, wardrobe, LH
3. 965176-023	Stile, wardrobe, RH
4. 965177-003	Header, wardrobe
5. 801254-103	Drawer face, 12.00” x 20.00”
6. 801254-023	Drawer face, 12.00” x 14.25”
7. 964909-04	Drawer box, 18.00” x 18.00” x 10.00”
8. 964909-03	Drawer box, 12.25” x 18.00” x 10.00”
9. 381835	HANDLE-CHROME/BRASS
10. 381228-01	Door grabber catch
11. 381727-02	Wardrobe door, mirrored, sliding
381526-03	DRW SLIDE-950-RV 18" 450MM PER
381526-06	BRACKET ADJUSTABLE REAR
800405-003	PLUG BUTTON HARDWOOD
365232	SEAL BAGGAGE DOOR #2180 H2-400
381663	GASKET D-SEAL EPDM SPONGE SD-2
453922	BRACKET, FORMED STOP

FURNITURE, BEDROOM

Wardrobe, Curbside 396

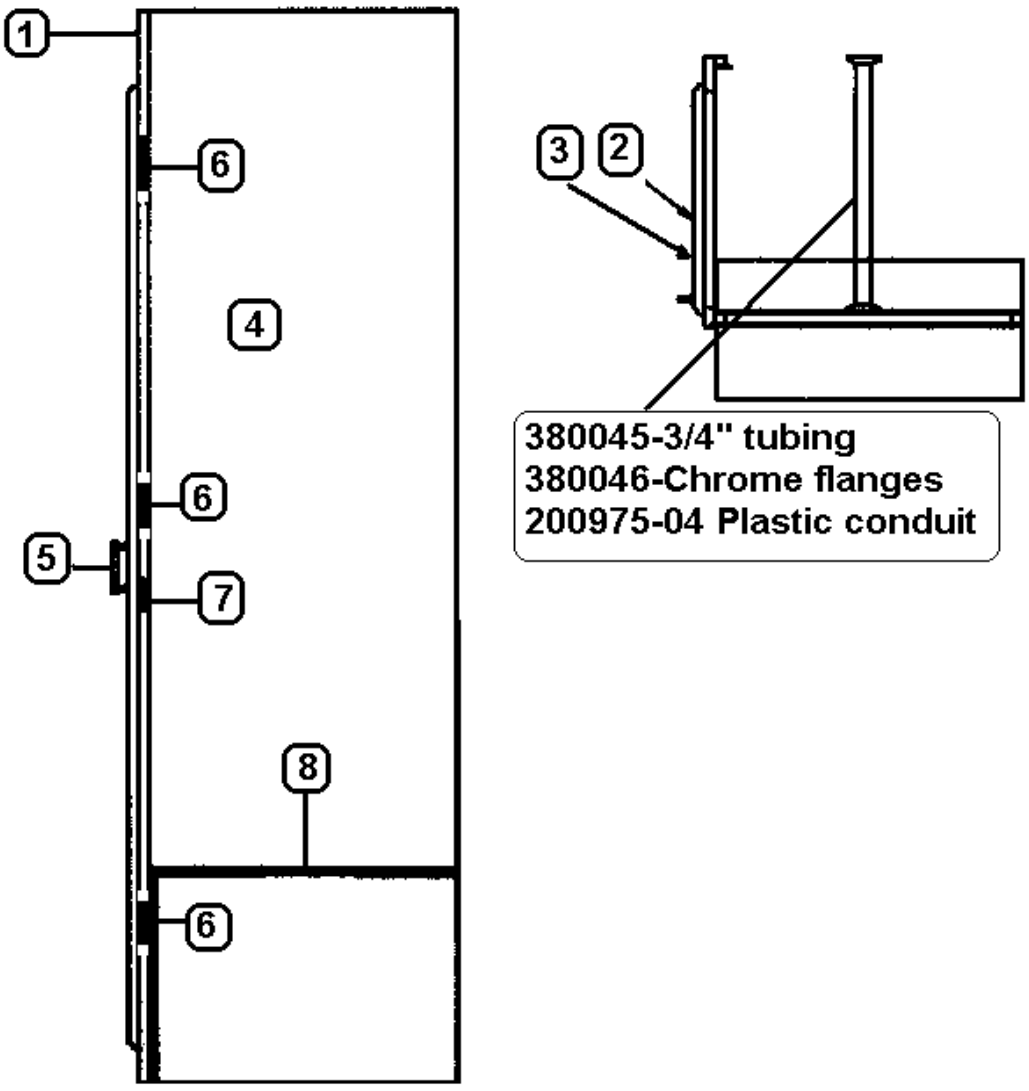

Part Numbers Are on the Next Page

2005 390/396/Sky Deck XL

FURNITURE, BEDROOM

Wardrobe, Curbside 396

965170-01	WARDROBE ASSY CS REAR
1. 965160-003	Face frame, CS closet
2. 801256-053	Door, frame only, 14.5” x 69.00”
3. 372210-21	Glass, beveled 11.62” x 32.62”
4. 381754	Mirror retaining clips, Not Shown
5. 381835	HANDLE-CHROME/BRASS
6. 381683	Door hinges, hidden
7. 381228	Door grabber catch
8. 701538	Carpet liner, black
800573-003	Door edge molding, 1 3/32” x 80”
381688	BUMPON
380045	TUBING 3/4" ELEC METALLIC
380046	FLANGE CHROME
200975-04	CONDUIT,FLEXIBLE BLACK PLASTIC

2005 390/396/Sky Deck XL

FURNITURE, BEDROOM

Wardrobe, Roadside, 396

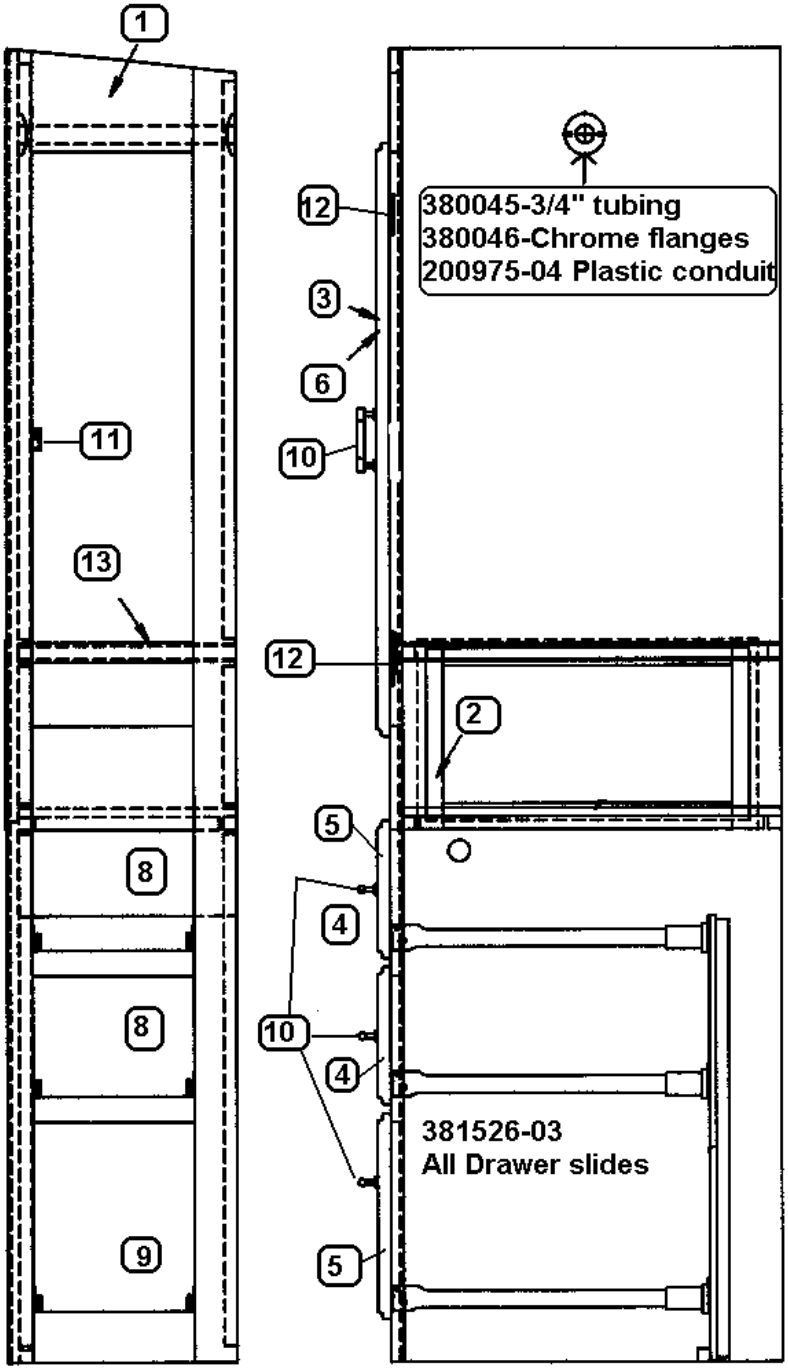

Part Numbers Are on the Next Page

FURNITURE, BEDROOM

Wardrobe, Roadside, 396

965171-01	Wardrobe Assembly, RS rear, 396 XL
1. 965161-003	Face frame, RS rear wardrobe
2. 964799-003	Face frame, Nightstand pocket
3. 801256-043	Door, frame only, 9.00” x 34.5”
4. 801254-173	Drawer face, 8.00” x 9.00”
5. 801254-183	Drawer face, 12.00” x 10.5”
6. 372210-20	Mirror, beveled, 6.12” x 31.62”
7. 381754	Mirror clips, not shown
8. 964907-12	Drawer box, 7.00” x 18.00” x 6.00”
9. 964909-09	Drawer box, 7.00” x 18.00” x 6.00”
10. 381835	HANDLE-CHROME/BRASS
11. 381228-01	Door grabber catch
12. 381683	Door hinges, hidden
13. 800573-60	Molding, door edge
381688	BUMPON
380045	TUBING 3/4" ELEC METALLIC
380046	FLANGE CHROME
200975-04	CONDUIT,FLEXIBLE BLACK PLASTIC
381526-03	DRW SLIDE-950-RV 18" 450MM PER
381526-06	BRACKET ADJUSTABLE REAR 251(PA

2005 390/396/Sky Deck XL

FURNITURE, BEDROOM

Wardrobe Slide out, Bedroom, 396

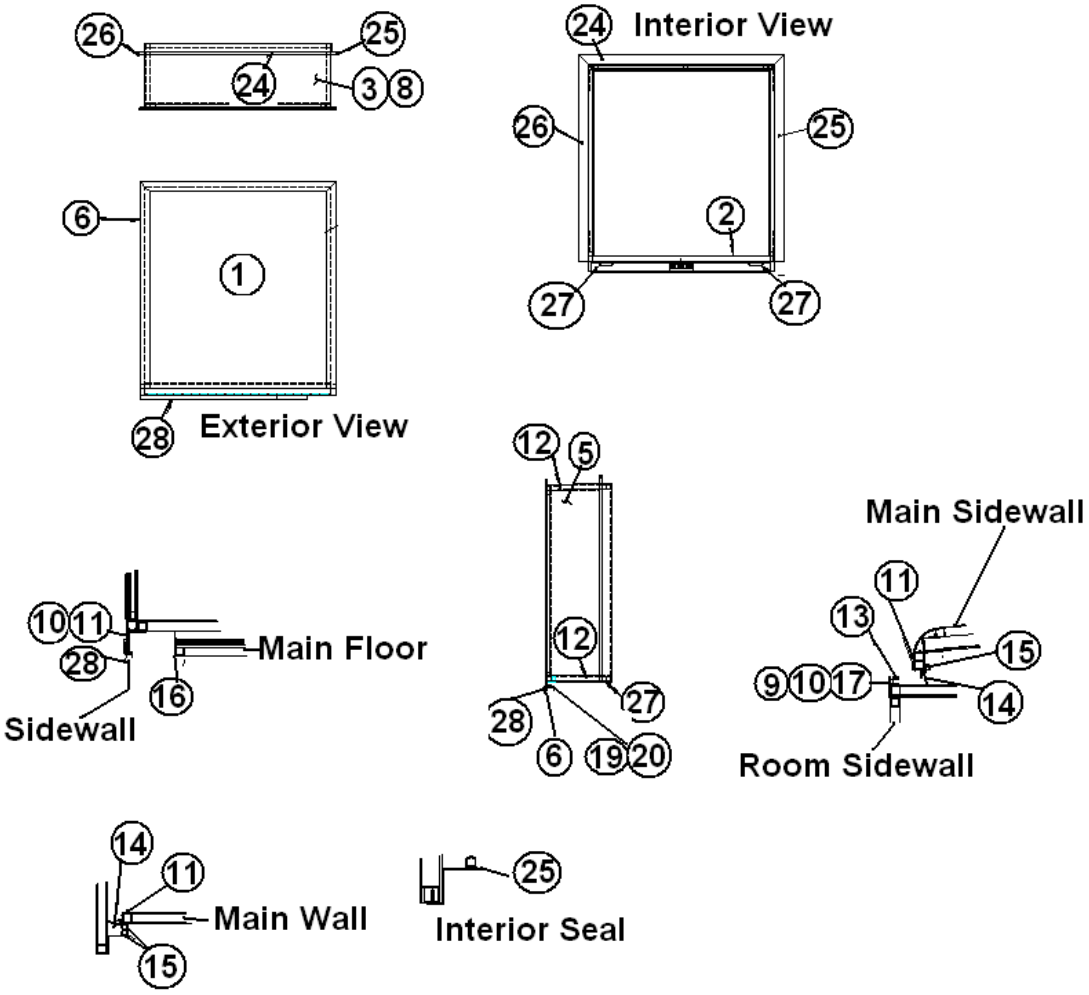

Part Numbers on the Next Page

2005 390/396/Sky Deck XL

FURNITURE, BEDROOM

Wardrobe Slide out, Bedroom, 396

1. 965307	Main wall assembly WDRB slide, XL
2. 965309	Floor assembly, slide-out, XL
3. 965308	Roof assembly, WDRB S/O
4. 965306-01	Wall assembly, aft S/O, XL
5. 965306-02	Wall assembly, aft S/O, 369 XL
6. 965299	Assembly, S/O WDRB mounting angle
7. 381709	Travel-bar, 18.50”
8. 114851-02	Roof wrap, bedroom, wardrobe slide out
9. 114770	Extrusion, slide-out box
10. 114771	Extrusion, slide-out trim
11. 114726	Extrusion, slide-out trim
12. 114768	Extrusion, slide-out corner trim
13. 381594	Rubber extrusion, bulb
14. 381587	Rubber extrusion, wiper
15. 381588	Rubber extrusion, bulb with tape
16. 381589	Rubber extrusion, floor wiper
17. 365235	Tape a double coated, .12 x 1.00
18. 114816	Drain pan, slide out-room
19. 345406	Carriage bolt, 3/8-16 x 1 ¼” long
20. 350170	Nut, 3/8-16
21. 330139-01	Rivet Magnalok, stainless steel,
22. 330139-02	Rivets Magnalok, stainless steel
23. 385946	Warning label, slide operation
24. 453925	Interior seal wardrobe, top
25. 453926-02	Interior seal wardrobe, right hand side
26. 453926-01	Interior seal wardrobe, left-hand side
27. 381623	Roller floor, slide-out
28. 114970	Trim, lower slide-out
702482	HEADLINER SPECTRA OPAL X

2005 390/396/Sky Deck XL

FURNITURE, BEDROOM

Television Cabinet, 396

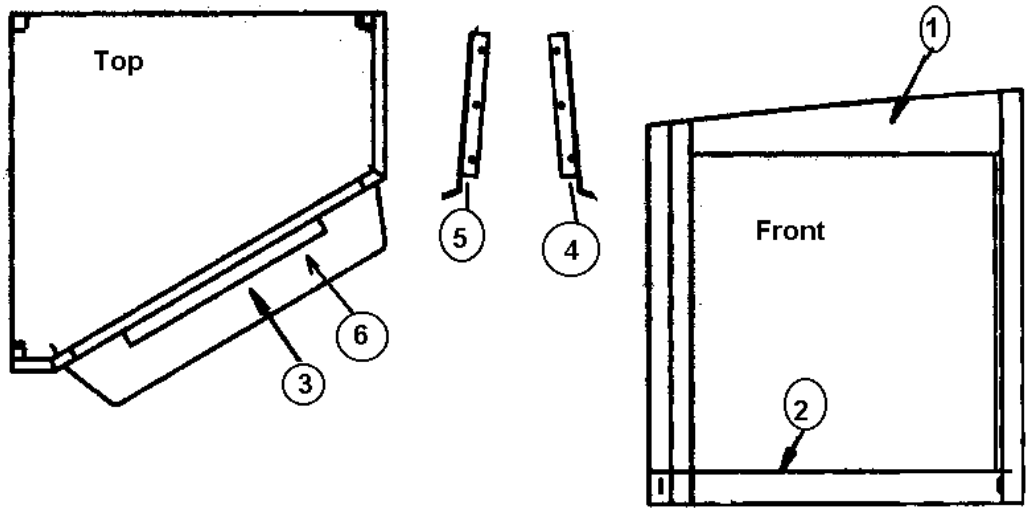

	965970	TV Cabinet Assembly, Bedroom, 396 XL
1.	965791-003	Face frame, TV cabinet
2.	801260-003	Panel, ½”, G1S, Hickory Veneer/Raw
3.	965792-01	Shelf assembly
4.	115139-01	BRACKET-RH TV MOUNT BEDROOM
5.	115139-02	BRACKET-LH TV MOUNT BEDROOM
6.	365238-04	EDGEBANDING TAPE PVC 5/8" WHITE

2005 390/396/Sky Deck XL

FURNITURE, BEDROOM

Wardrobe, Curbside, Slide out, 396 XL

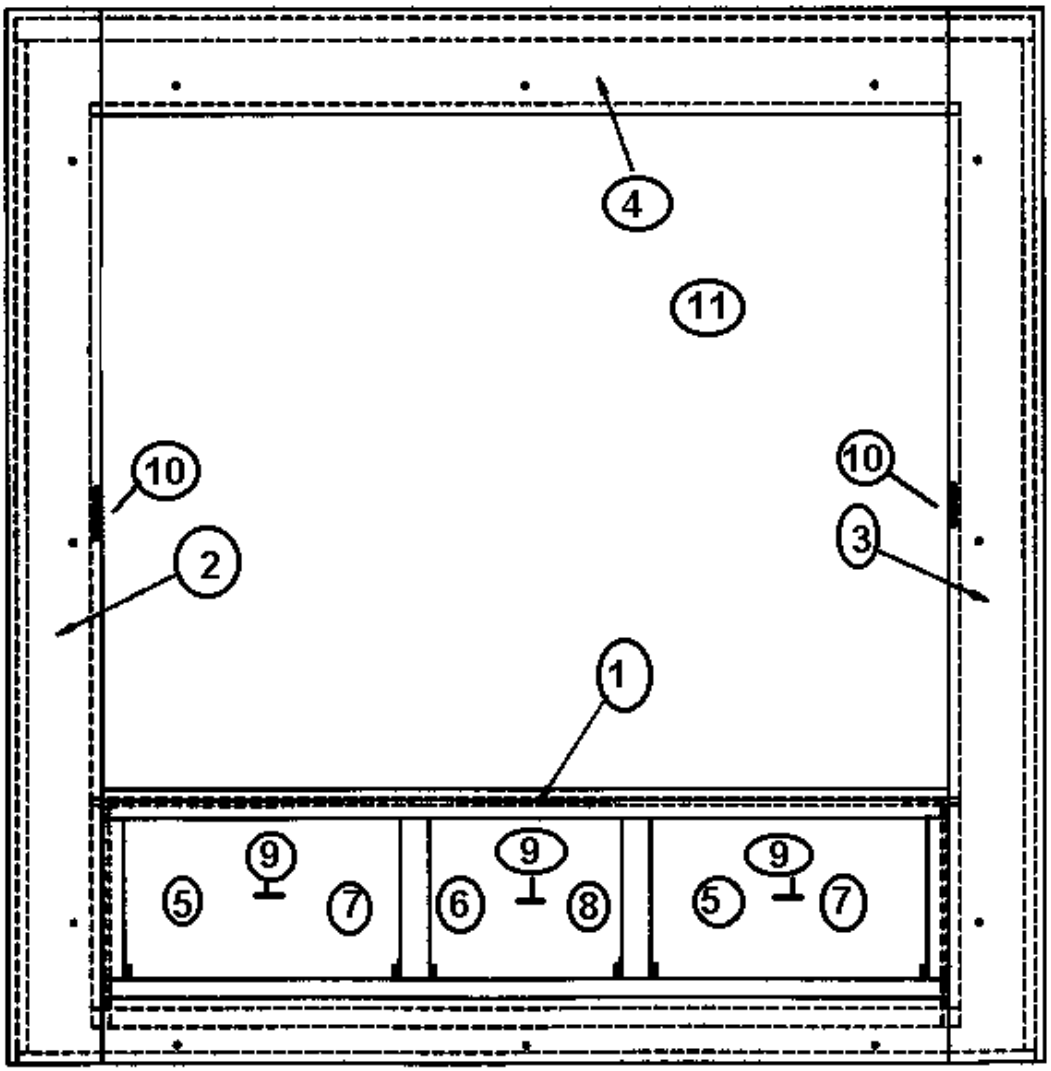

Part Numbers On The Next Page

FURNITURE, BEDROOM

Wardrobe, Curbside, Slide out, 396 XL

965173-01	Wardrobe Assembly, Slide out, CS Rear
1. 965166-003	Face frame, wardrobe, slide out, 396 XL
2. 965176-013	Stile, wardrobe, LH
3. 965176-023	Stile, wardrobe, RH
4. 965177-003	Header, wardrobe
5. 801254-103	Drawer face, 12.00” x 20.00”
6. 801254-023	Drawer face, 12.00” x 14.25”
7. 964909-04	Drawer box, 18.00” x 18.00” x 10.00”
8. 964909-03	Drawer box, 12.25” x 18.00” x 10.00”
9. 381835	HANDLE-CHROME/BRASS
10. 381228-01	Door grabber catch
11. 381727-02	Wardrobe door, mirrored, sliding
381526-03	DRW SLIDE-950-RV 18" 450MM PER
381526-06	BRACKET ADJUSTABLE REAR 251
800405-003	PLUG BUTTON HARDWOOD
365232	SEAL BAGGAGE DOOR #2180 H2-400
381663	GASKET D-SEAL EPDM SPONGE SD-2

2005 390/396/Sky Deck XL

FURNITURE, BEDROOM

Vanity Assembly, 396

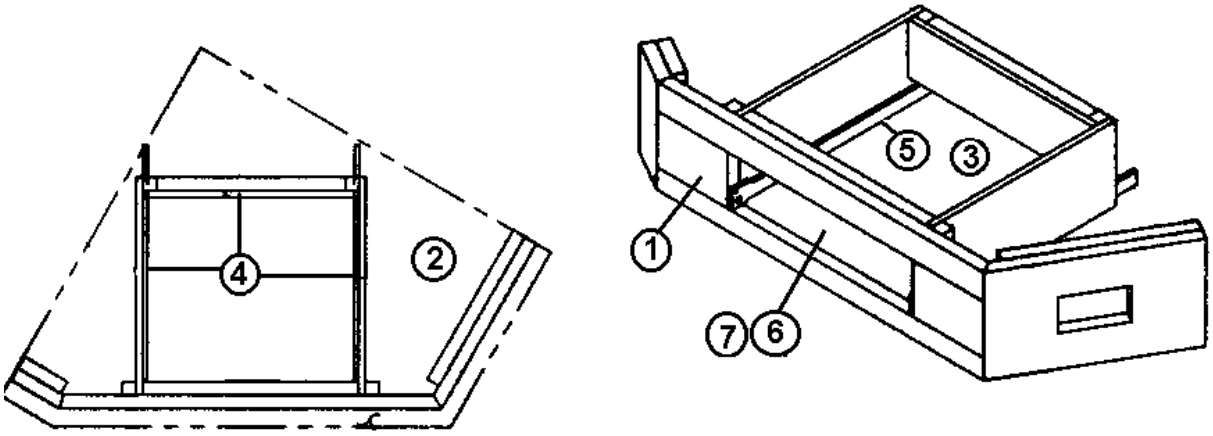

	965422-01	Vanity Assembly
1.	965421-003	VANITY FRONT-BEDROOM, 396
2.	601932	SHELF-TOP TV BEDROOM, MIDNIGHT
2.	601932-01	SHELF-TOP TV BEDROOM, SANDSTONE
2.	601932-02	SHELF-TOP TV BEDROOM, EVEREST
3.	964906-18	DRAWER BOX, 2.75" X 11.00"X 11.00"
4.	800507-03	LAUAN, 3/8" X 4' X 8'
5.	381526-01	DRAWER SLIDE, 14”
6.	801254-164	DRAWER FACE - 4.75 X 14.25 OAK
7.	381835	HANDLE-CHROME/BRASS

2005 390/396/Sky Deck XL

FURNITURE, BEDROOM

End Table, 390/396

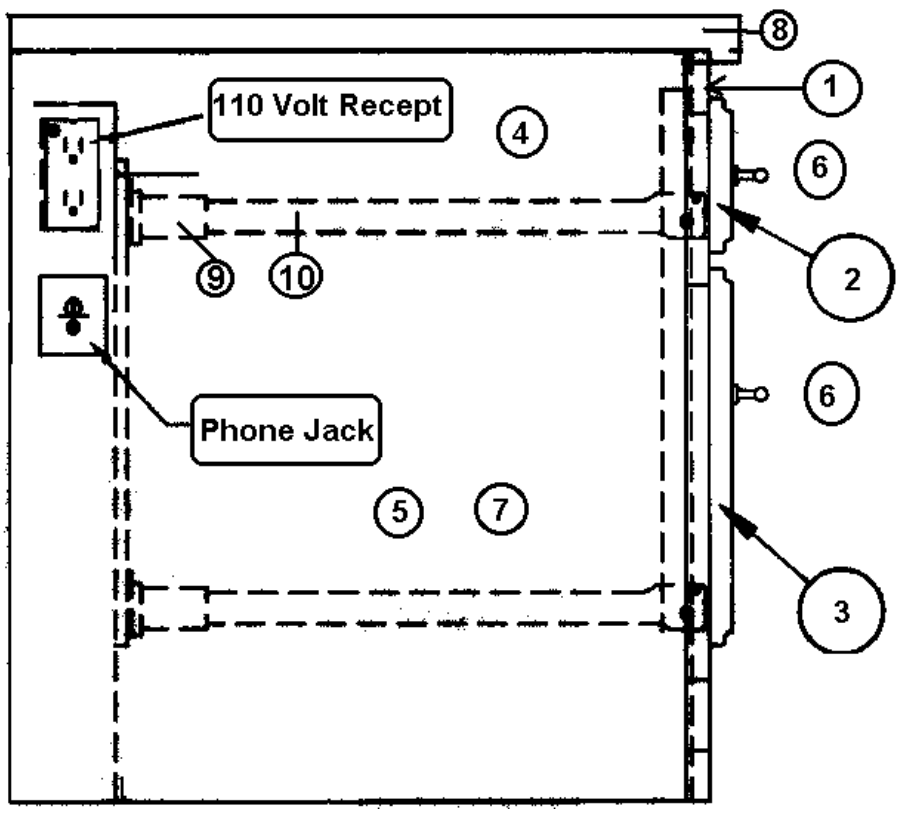

965083-02	End table assembly, 390/396 XL
1. 965084-003	Face frame, End Table
2. 801254-163	Drawer face, 4.75” x 14.25
3. 801254-023	Drawer face, 12.00” x 14.25”
4. 964906-15	Drawer box, 12.25” x 18.00” x 2.75”
5. 964909-03	Drawer box, 12.25” x 18.00” x 10.75”
6. 381835	HANDLE-CHROME/BRASS
7. 114961	Hanger, file folder, Not shown
8. 965059-01	Top assembly, end table
9. 381526-03	Drawer slide, 18”
10. 381526-06	Bracket, adjustable, rear

2005 390/396/Sky Deck XL

FURNITURE, BEDROOM

End Table, 390 Sky Deck

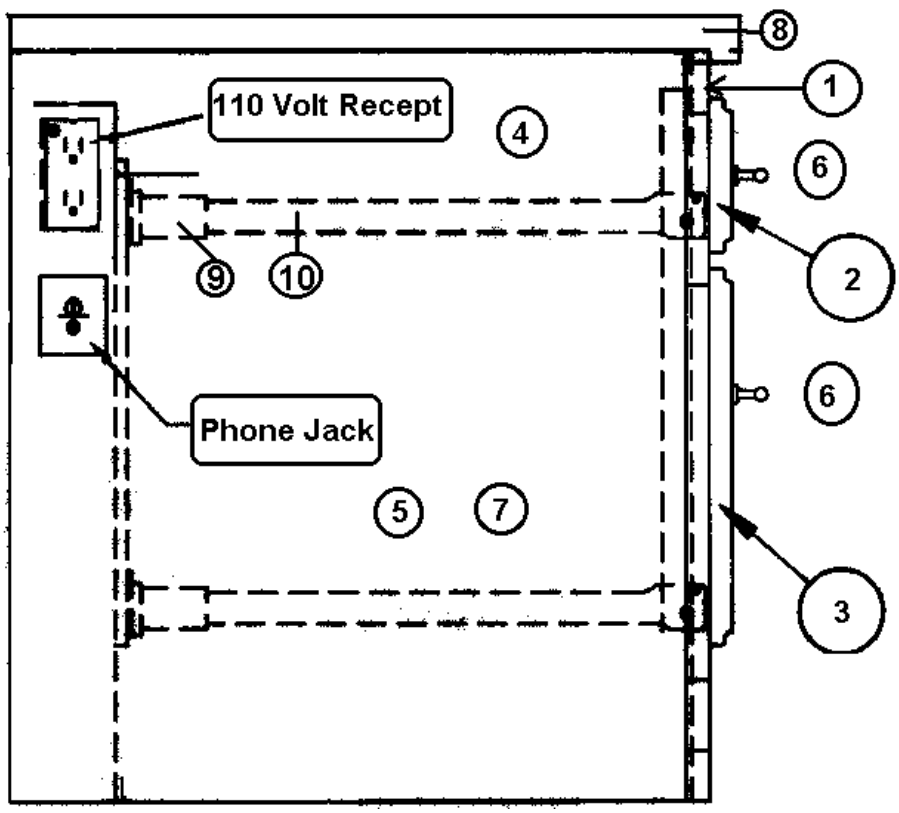

965083-01	End table assembly
1. 965084-006	Face frame, End Table
2. 801254-166	Drawer face, 4.75” x 14.25
3. 801254-026	Drawer face, 12.00” x 14.25”
4. 964906-15	Drawer box, 12.25” x 18.00” x 2.75”
5. 964909-03	Drawer box, 12.25” x 18.00” x 10.75”
6. 381835	HANDLE-CHROME/BRASS
7. 114961	Hanger, file folder, Not shown
8. 965059-01	Top assembly, end table
9. 381526-03	Drawer slide, 18”
10. 381526-06	Bracket, adjustable, rear
381614	FOLDING SHELF BRACKET

2005 390/396/Sky Deck XL

FURNITURE, BEDROOM

Wardrobe, Curbside, 390 Sky Deck

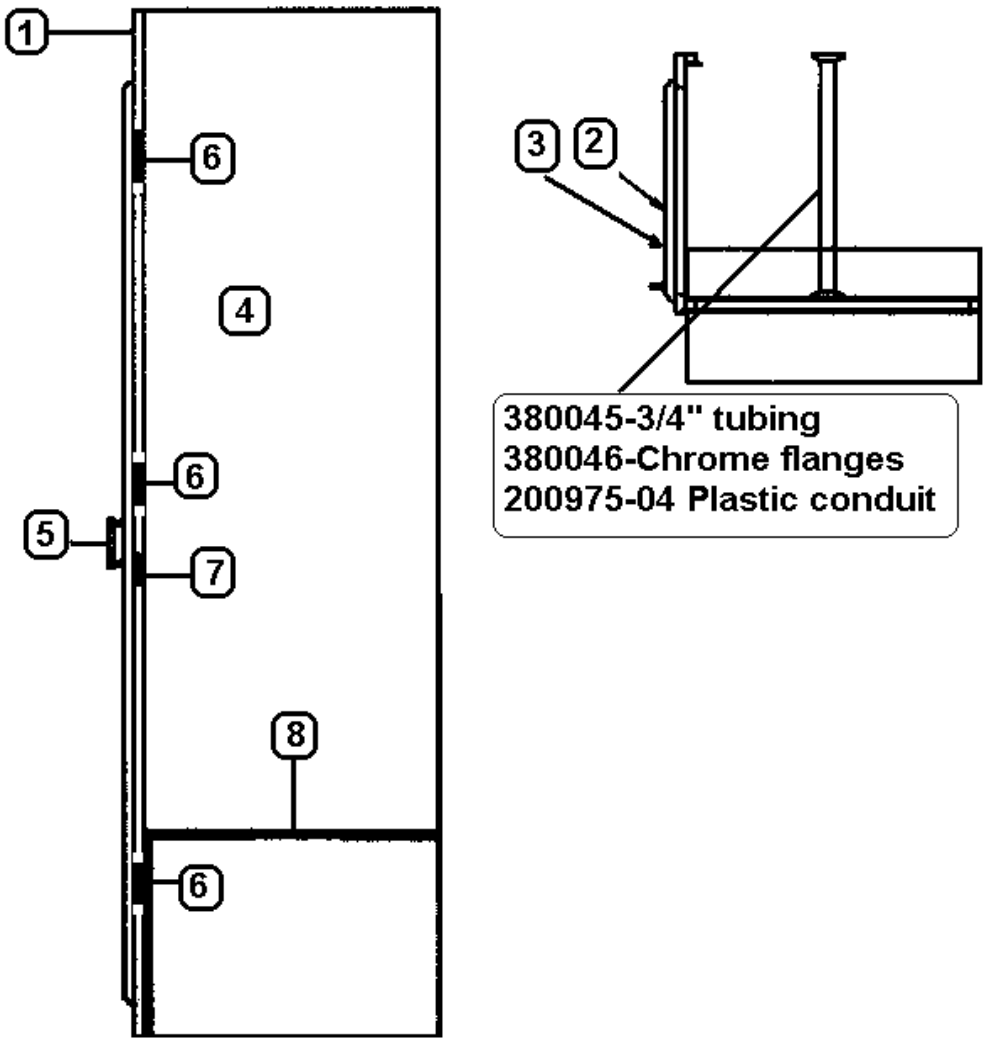

964846-02	Wardrobe Assembly, CS Rear-390 XL
1. 964782-006	Face frame, CS closet
2. 801256-016	Door, frame only, 16.5” x 69.00”
3. 372210-15	Glass, beveled 13.62” x 32.62”
4. 381754	Mirror retaining clips, Not Shown
5. 381835	HANDLE-CHROME/BRASS
6. 381683	Door hinges, hidden
7. 381228	Door grabber catch
8. 701538	Carpet liner, black

2005 390/396/Sky Deck XL

FURNITURE, BEDROOM

Wardrobe, Roadside, 390 Sky Deck

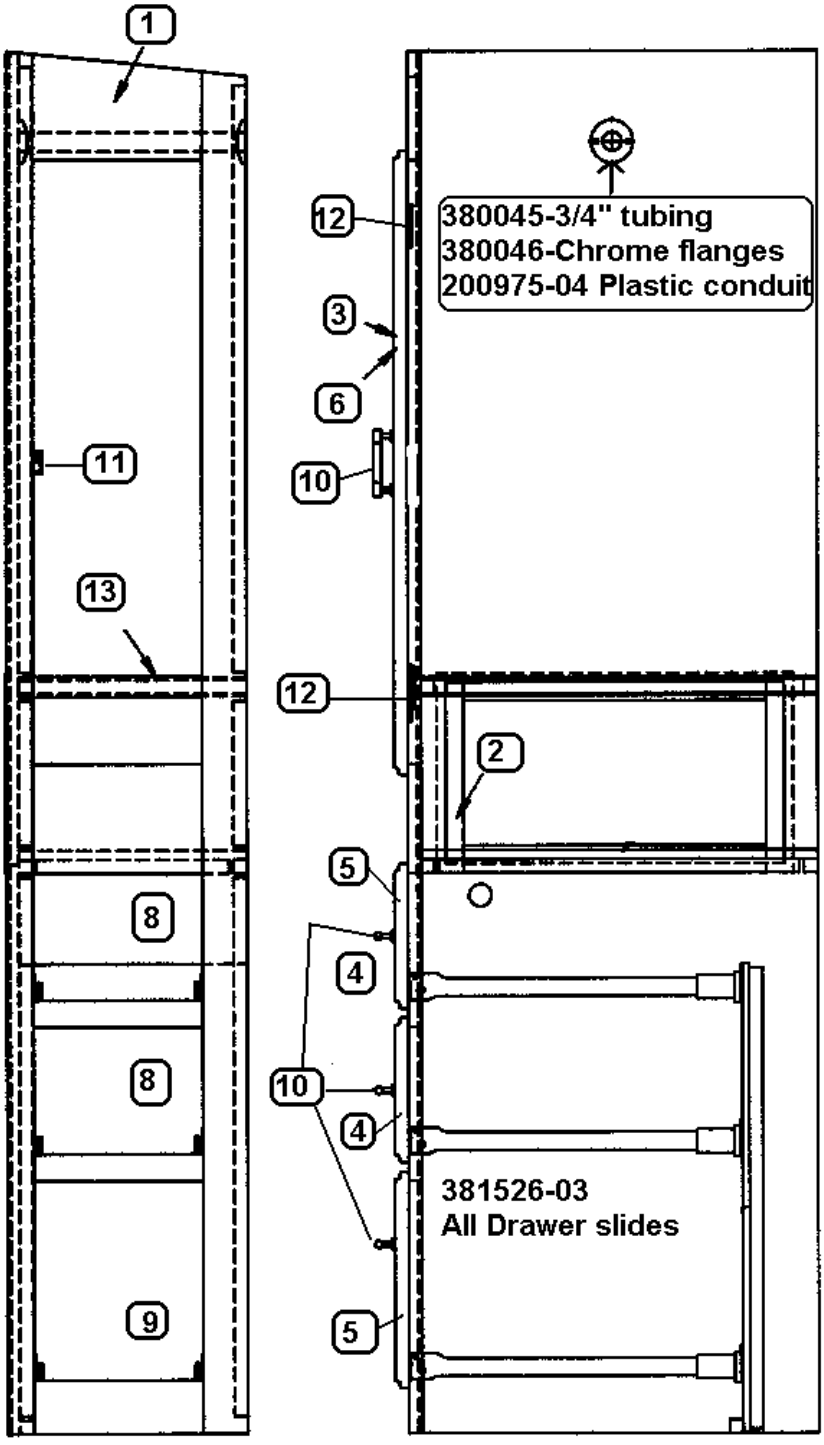

Part Numbers on the Next Page

FURNITURE, BEDROOM

Wardrobe, Roadside, 390 Sky Deck

964847-02	Wardrobe Assembly, RS rear
1. 964783-006	Face frame, RS corner wardrobe
2. 964799-006	Face frame, Nightstand pocket
3. 801256-026	Door, frame only, 10.5” x 34.5”
4. 801254-076	Drawer face, 8.00” x 10.5”
5. 801254-086	Drawer face, 12.00” x 10.5”
6. 372210-14	Mirror, beveled, 7.62” x 31.62”
7. 381754	Mirror clips, not shown
8. 964907-02	Drawer box, 6” x 8.5” x 18”
9. 964907-01	Drawer box, 10” x 8.5” x 18”
10. 381835	HANDLE-CHROME/BRASS
11. 381228-01	Door grabber catch
12. 381683	Door hinges, hidden
13. 800573-016	Molding, door edge
381526-03	DRW SLIDE-950-RV 18" 450MM PER
381526-06	BRACKET ADJUSTABLE REAR 251

2005 390/396/Sky Deck XL

FURNITURE, BEDROOM

Roof Locker, Roadside, 390 Sky Deck

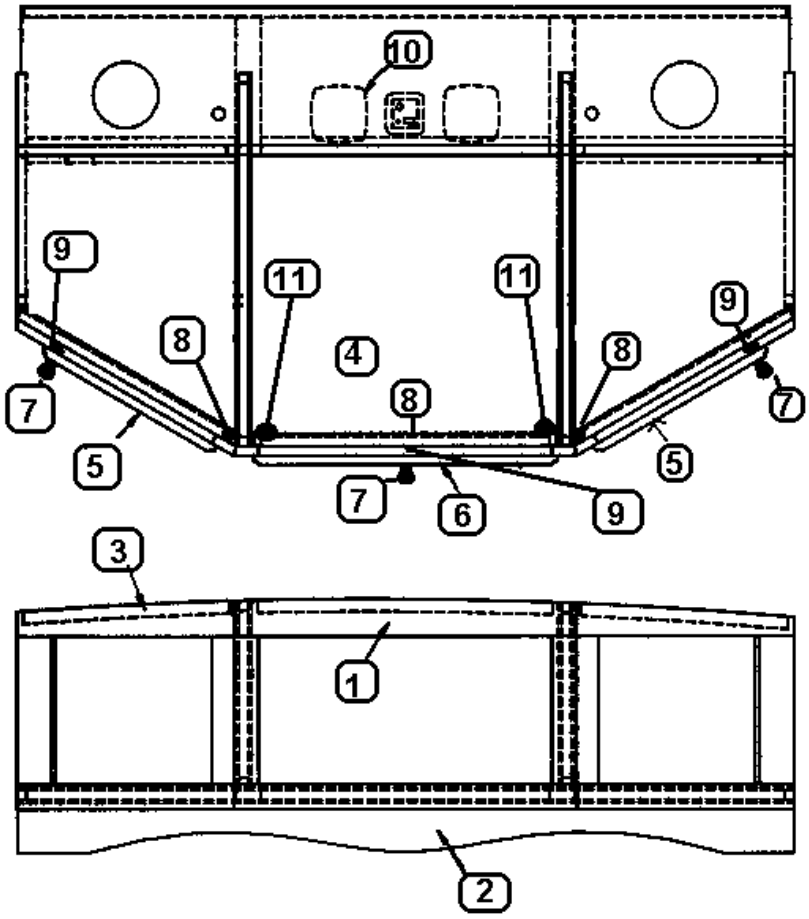

964848	Roof locker Assembly, RS rear
1. 964784-006	Face frame, Rear liner locker
2. 964796-006	Rail, rear roof locker, light cover
3. 114812	Aluminum angle, 1” x 1”
4. 701538	Carpet liner, black
5. 801253-096	Door, raised panel, 16” x 12.75”
6. 801253-106	Door, raised panel, 24.5” x 12.75”
7. 381835	HANDLE-CHROME/BRASS
8. 391683	Door hinges, hidden
9. 381228-01	Door grabber catch
10. 511464-07	Speaker/Headphone system
11. 381147	Door support

2005 390/396/Sky Deck XL

FURNITURE, BEDROOM

Bed, 390 Sky Deck

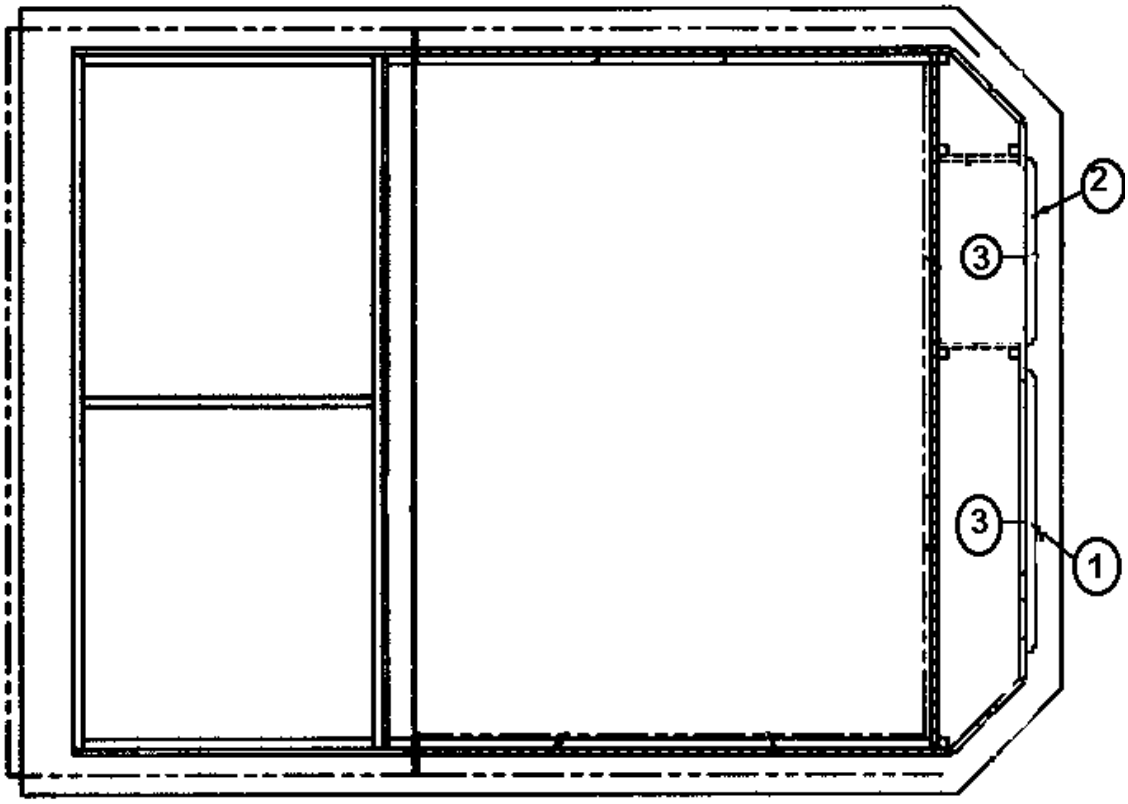

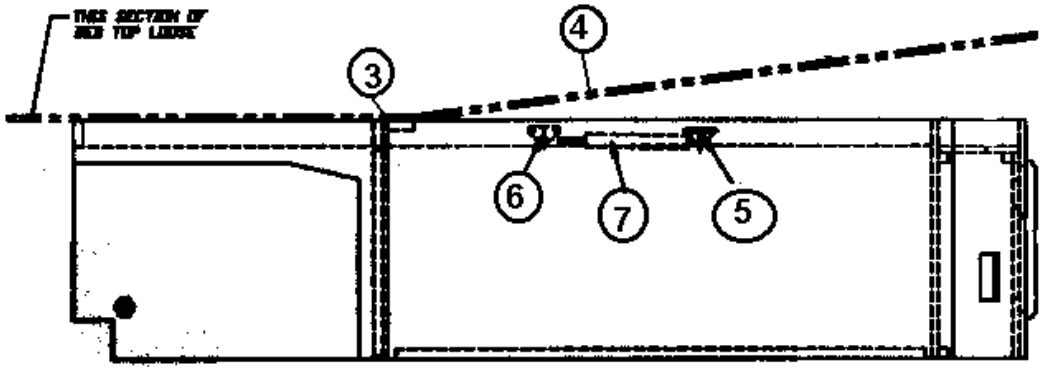

Part Numbers On The Next Page

2005 390/396/Sky Deck XL

FURNITURE, BEDROOM

Bed, 390 Sky Deck

965172-01	Bed Assembly, 390/396
1. 800254-056	Drawer face, 12” x 21.50”
2. 800254-026	Drawer face, 12” x 14.25”
3. 381836	HINGE-BRITE BRASS
4. 965180	Bed top assembly
5. 381262	Bracket, prop, w/ball, straight
6. 381263	Bracket, prop, w/ball, angled
7. 381549	Gas spring, 150 lbs.
385940	Mirror pull, brass
380203-01	HINGE PIANO 1/8" PIN
381228-01	CATCH GRABBER DOOR
381228-01	CATCH GRABBER DOOR
365265-01	EDGEBANDING-5/8" NORTHERN OAK
114690	ANGLE BED CORNER
965605-03	Headboard Assembly, designated color scheme
371387	MIRROR HEADBOARD 10VG W/BEVEL
700811	BUTTON CAP, HANDY #36
700813	BUTTON, NAIL BOTTOM

2005 390/396/Sky Deck XL

FURNITURE, BEDROOM

Television Cabinet, 390 Sky Deck

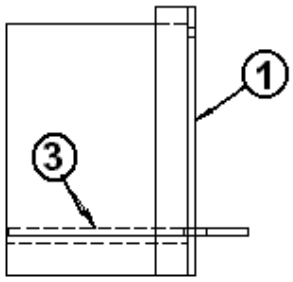

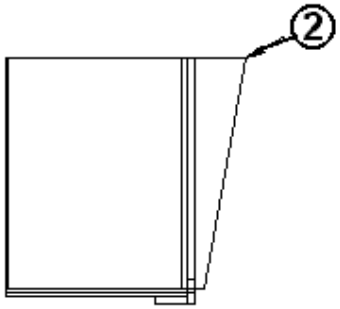

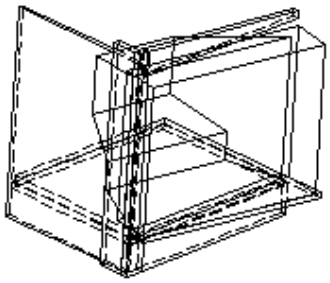

965782	TV Cabinet Assembly, 390 XL
1. 965783-006	Face frame, TV cabinet
2. 965787-006	Shelf extension, TV cabinet
3. 800506-06	¾” plywood
381310	Bracket, gas prop, upper
115139-01	BRACKET-RH TV MOUNT BEDROOM
115139-02	BRACKET-LH TV MOUNT BEDROOM
381569-04	SPRING GAS 20#
381262	BRACKET, PROP, W/BALL, ANGLED
114960	BRACKET-TV ROLLER SUPPORT
381443-05	CARRIER #7000
300133	WASHER EXTERNAL STAR 7/8ID 3INC

2005 390/396/Sky Deck XL

FURNITURE, GALLEY

Galley, 3 Burner w/Oven 390/396

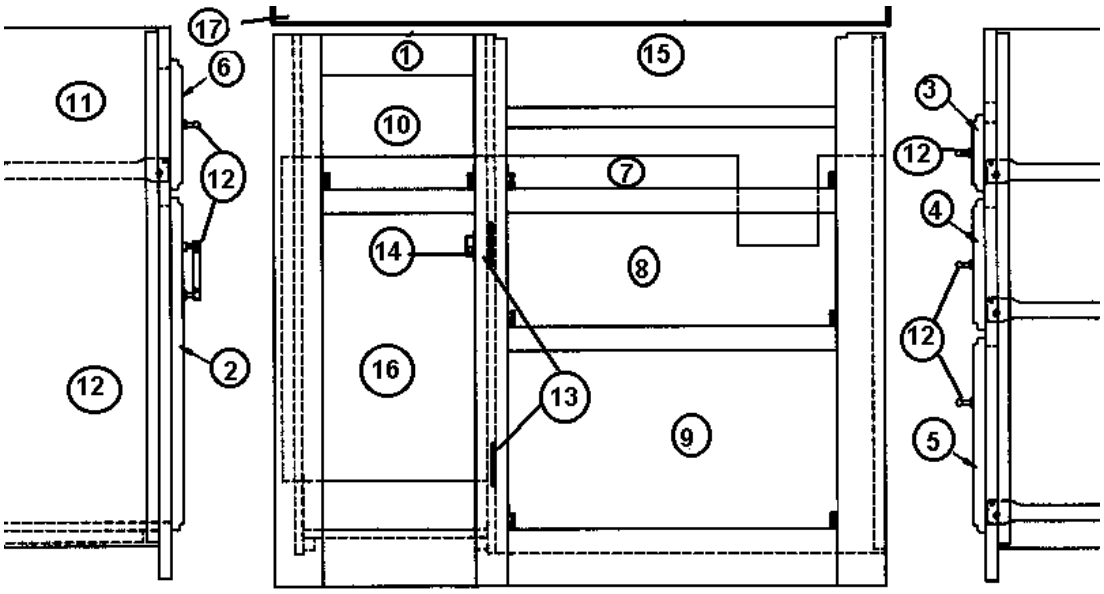

964856-06	Galley, Cook top Section, 390
1. 964762-003	Face frame, Galley, cook top section
2. 801253-053	Door, raised panel, 10.50” x 20.5”
3. 801254-033	Drawer face, 4.75” x 21.50”
4. 801254-043	Drawer face, 8.00” x 21.50”
5. 801254-053	Drawer face, 12.00” x 21.50”
6. 801254-073	Drawer face, 8.00” x 10.50”
7. 964906-02	Drawer box, 2.75” x 19.50” x 18.00”
8. 964907-03	Drawer box, 6.00” x 19.50” x 18.00”
9. 964909-02	Drawer box, 10.00” x 19.50” x 18.00”
10. 964907-02	Drawer box, 6.00” x 8.50” x 18.00”
11. 381526-03	Drawer slide, 18”, pair
12. 381835	HANDLE-CHROME/BRASS
13. 381683	Door hinges
14. 381228-01	Door grabber catch
15. 690396-10	COOKTOP-3 BURNER, S. S. TOP
16. 381491	Trash can, roll out
17. 601913	Corian galley top, Midnight
17. 601913-01	Corian galley top, Sandstone
17. 601913-02	Corian galley top, Everest

2005 390/396/Sky Deck XL

FURNITURE, GALLEY

Galley, Drawer Section 390/396

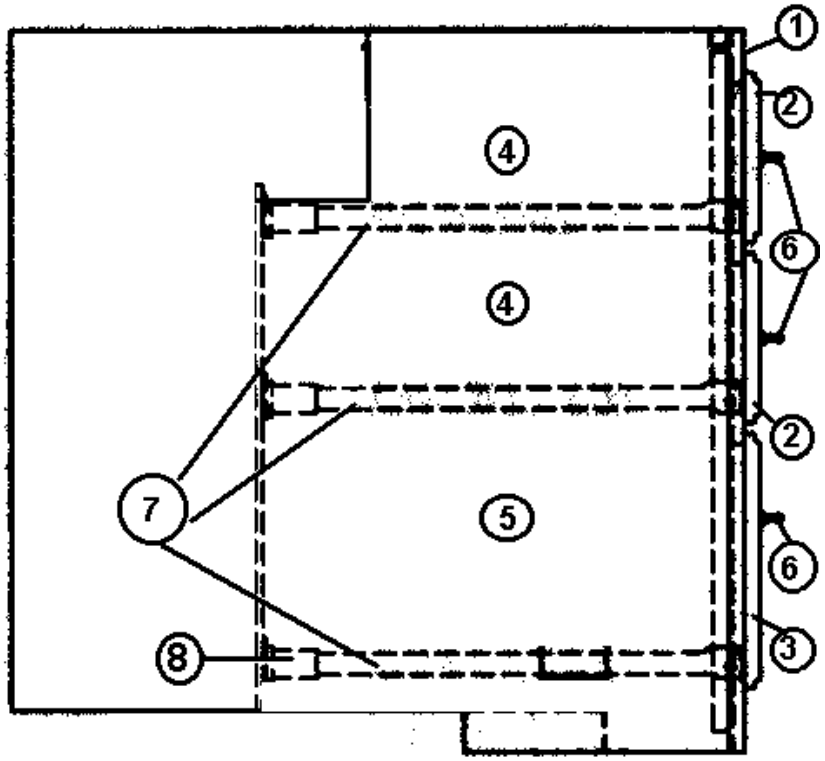

964858-01	Galley Assembly, Drawer Section
1. 964761-003	Face frame, Galley drawer section
2. 801254-013	Drawer face, 8.00” x 14.25”
3. 801254-023	Drawer face, 12.00” x 14.25”
4. 964907-07	Drawer box, 6.00” x 12.25” x 22.00”
5. 964909-05	Drawer box, 10.00” x 12.25” x 22.00”
6. 381835	HANDLE-CHROME/BRASS
7. 381526-05	Drawer slide, 22” pair
8. 381526-06	Drawer slide, Adjustable rear bracket

2005 390/396/Sky Deck XL

FURNITURE, GALLEY

Galley, Sink Section 390/396

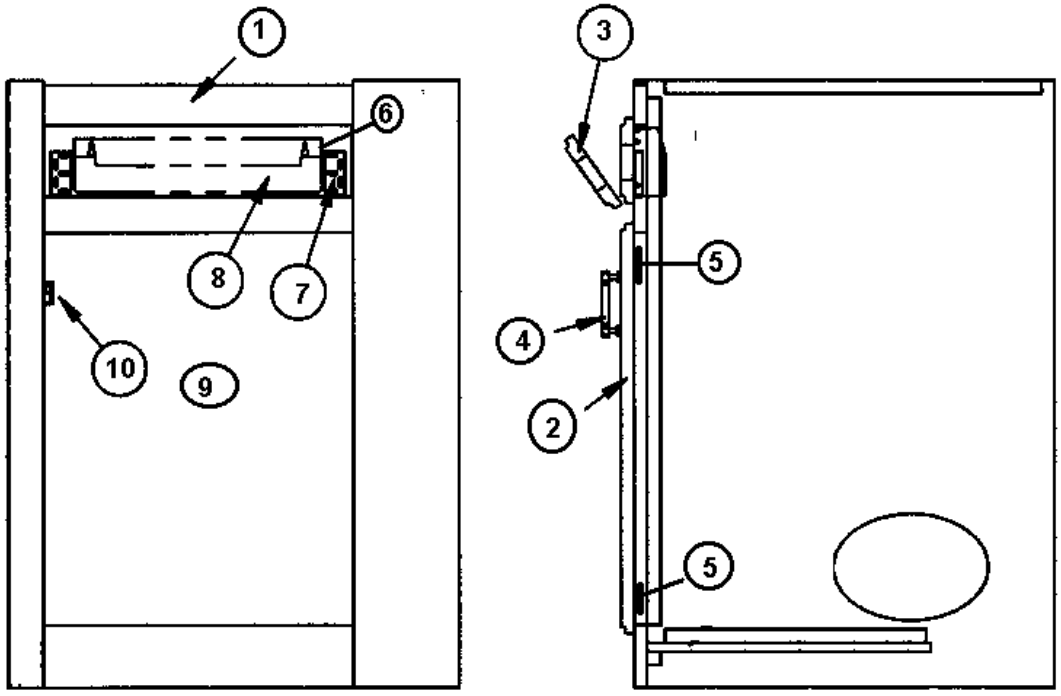

964855-01 Galley, Sink Section 390/396 XL

1. 964764-003	Face frame, galley sink section
2. 801253-073	Door raised panel, 18.38” x 23.00”
3. 801254-113	Drawer face, 4.75’ x 18.38”
4. 381835	HANDLE-CHROME/BRASS
5. 381683	Door hinges
6. 385940	Mirror pull, brass
7. 381685	Scissor hinge, sink tip-out tray
8. 381686	Tray, plastic, 14”
9. 964911	Shelf insert assembly
10. 381228-01	Door grabber catch
601897	SINK COVER-RH-MIDNIGHT
601897-01	SINK COVER-RH-SANDSTONE
601897-02	SINK COVER-RH-EVEREST
601902	SINK COVER, LH-MIDNIGHT
601902-01	SINK COVER, LH-SANDSTONE
601902-02	SINK COVER, LH-EVEREST
800571-013	MOLDING FLAT .52”W X 80" oak
381678	SPLASH PROTECTOR GLASS GALLEY
200980-01	Tray, silverware

2005 390/396/Sky Deck XL

FURNITURE, GALLEY

Refrigerator Cabinet, 390/396

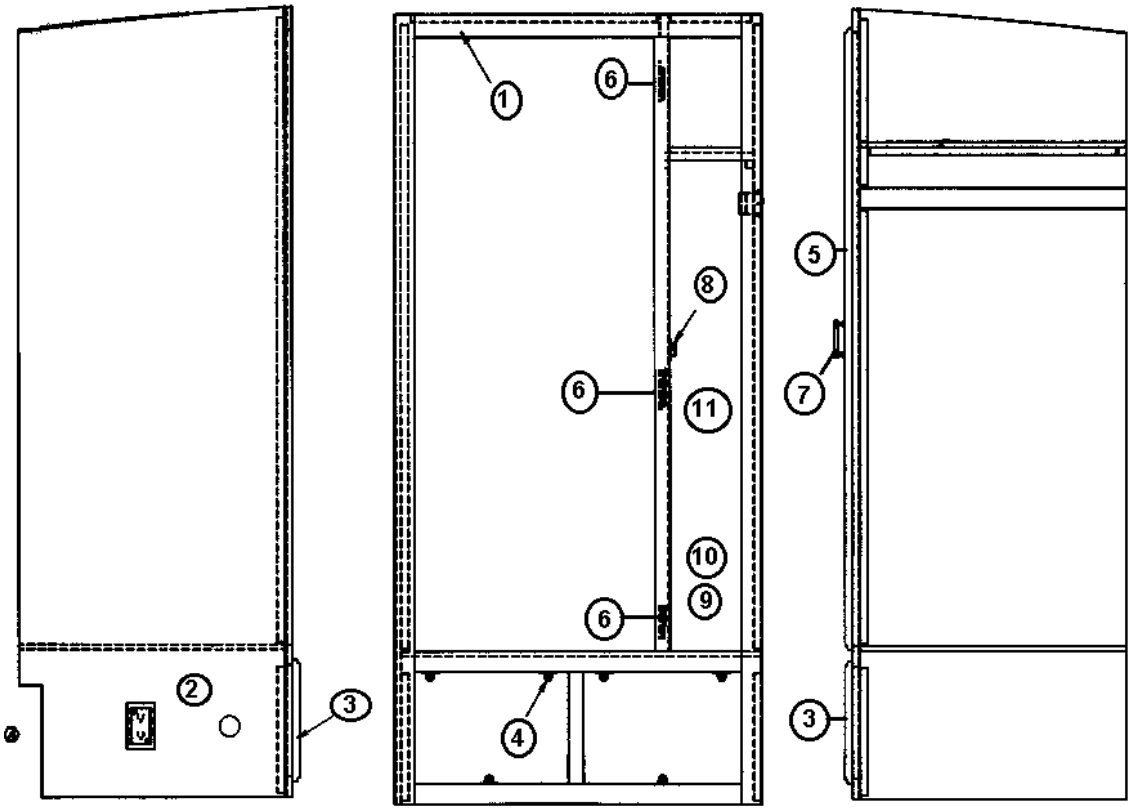

Part Numbers On the Next Page

2005 390/396/Sky Deck XL

FURNITURE, GALLEY

Refrigerator Cabinet, 390/396

	964926-01	Refrigerator, Cabinet, 390/396
1.	964916-003	Face frame, refer, 10 CF
2.	922526	Refer stand
3.	801255-033	Door, louvered, 16.75” x 12.00”
4.	381074	Bull dog catch
5.	801254-143	Drawer face, 8.00” x 60.75”
6.	381683	Door hinges
7.	381835	HANDLE-CHROME/BRASS
8.	381228	Door grabber catch
9.	381831-01	PANTRY-PULL OUT 42.5"/60"
10.	381831-05	BASKET-WIRE 4" 4 SIDED
11.	381805	BOLT-SLIDE 3"
	800573-013	MOLDING DOOR EDGE 1 3/32” X 80”
	381830	WIPER-RUBBER 1.125" X 2"
	381589	RUBBER EXTRUSION, FLOOR WIPER
	385940	MIRROR PULL BRASS

2005 390/396/Sky Deck XL

FURNITURE, GALLEY

Galley Spice Cabinet, 390/396

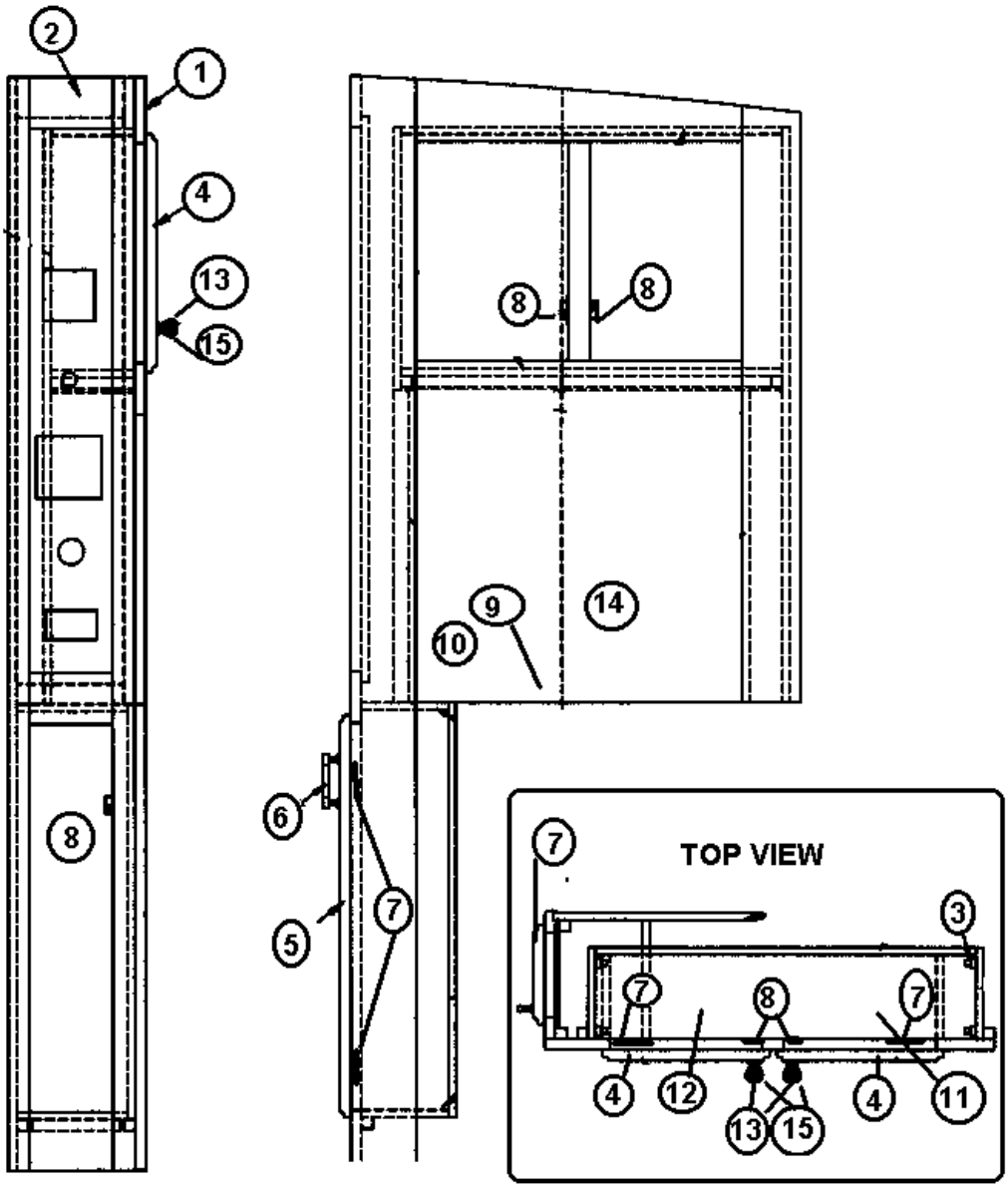

Part Numbers On the Next Page

FURNITURE, GALLEY

Galley Spice Cabinet, 390/396

965815-01		Galley Spice Cabinet, 390/396 XL
1.	964766-003	Face frame, galley spice cabinet
2.	964788-003	Face frame, galley control panel
3.	381527	Speedy shelf strips
4.	801256-033	Door, frame
5.	801254-123	Drawer face, 6.75” x 27.50”
6.	381835	HANDLE-CHROME/BRASS
7.	381683	Door hinges
8.	381228-01	Door grabber catch
9.	601914	Corian, galley shelf, Midnight
9.	601914-01	Corian, galley shelf, Sandstone
9.	601914-02	Corian, galley shelf, Everest
10.	371377-01	Glass shelf, ¼” x 5.75” x 25.38”
11.	381687-01	Glass Dec RH, 8.62” x 13.38”
12.	381687-02	Glass Dec LH, 8.62” x 13.38”
13.	381796	Knob, Hollow 1.25"
14.	372210-17	Mirror, 15.25” x 22.92”
14.	381754	Mirror clip

2005 390/396/Sky Deck XL

FURNITURE, GALLEY

Dinette Table, 390/396

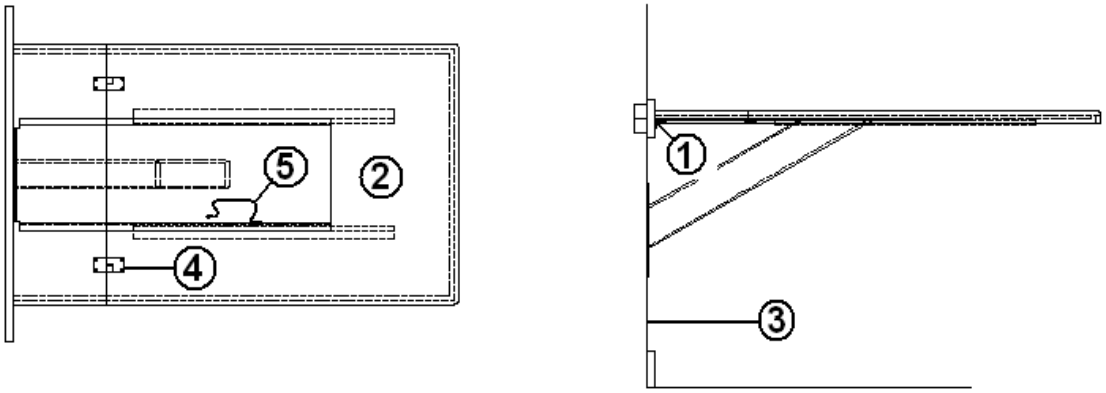

1.	453807	BRACKET-DINETTE TABLE
2.	601915	TOP, DINETTE CORIAN, MIDNIGHT
2.	601915-01	TOP, DINETTE CORIAN, SANDSTONE
2.	601915-02	TOP, DINETTE CORIAN, EVEREST
3.	381228-01	CATCH GRABBER DOOR
4.	381857	ALIGNER-TABLE #TT0103 (PR)
5.	381065-10	10" CABLE SUPPORT

2005 390/396/Sky Deck XL

FURNITURE, GALLEY

Roof Locker, LH Galley, 390/396

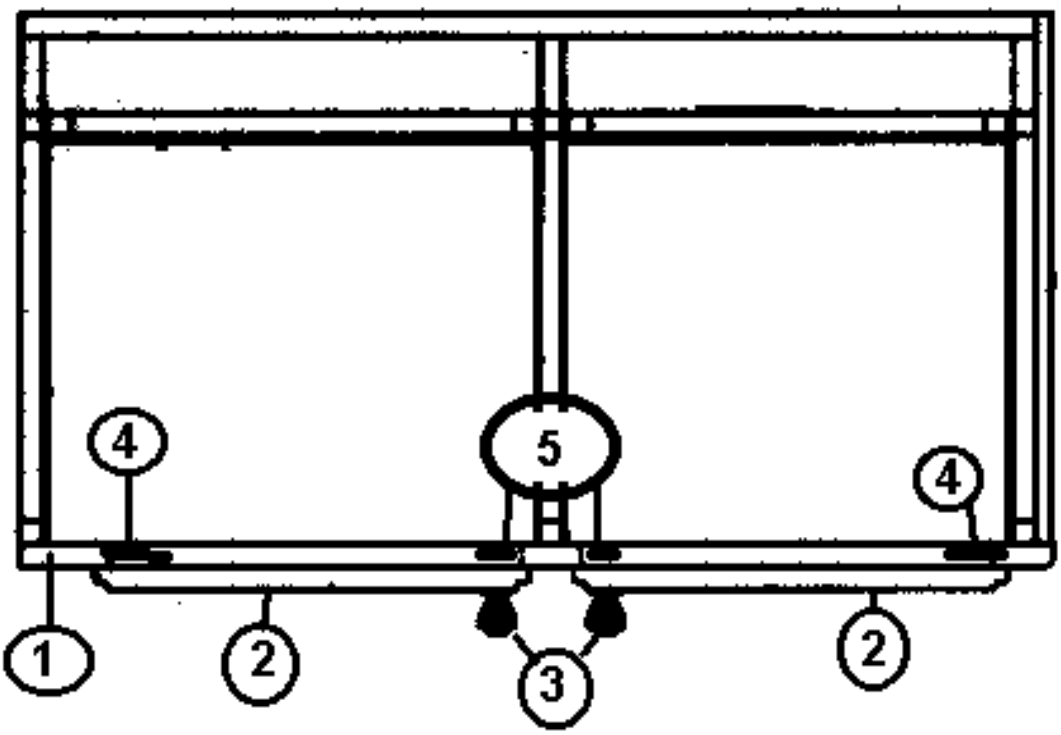

	964862-01	Locker Assembly, LH Galley
1.	964771-003	Face frame, LH Galley
2.	801253-033	Door, raised panel, 14.50” x 16.25”
3.	381835	HANDLE-CHROME/BRASS
4.	381683	Door hinges
5.	381228-01	Door grabber catch

2005 390/396/Sky Deck XL

FURNITURE, GALLEY

Roof Locker, Dinette RH, 390/396

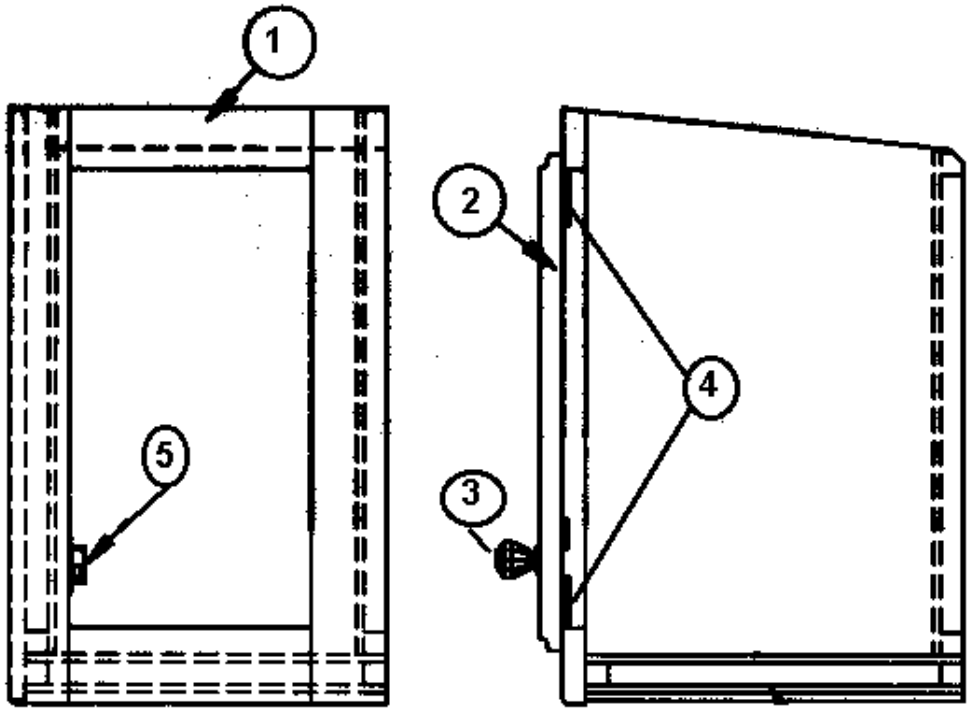

964866-01 Locker Assembly, Dinette RH, 390/396 XL

1. 964787-003 Face frame, dinette overhead
2. 801253-013 Door, raised panel, 9.00” x 16.25”
3. 381835 HANDLE-CHROME/BRASS
4. 381683 Door hinges
5. 381228-01 Door grabber catch

2005 390/396/Sky Deck XL

FURNITURE, GALLEY

Roof Locker, Dinette, 390/396

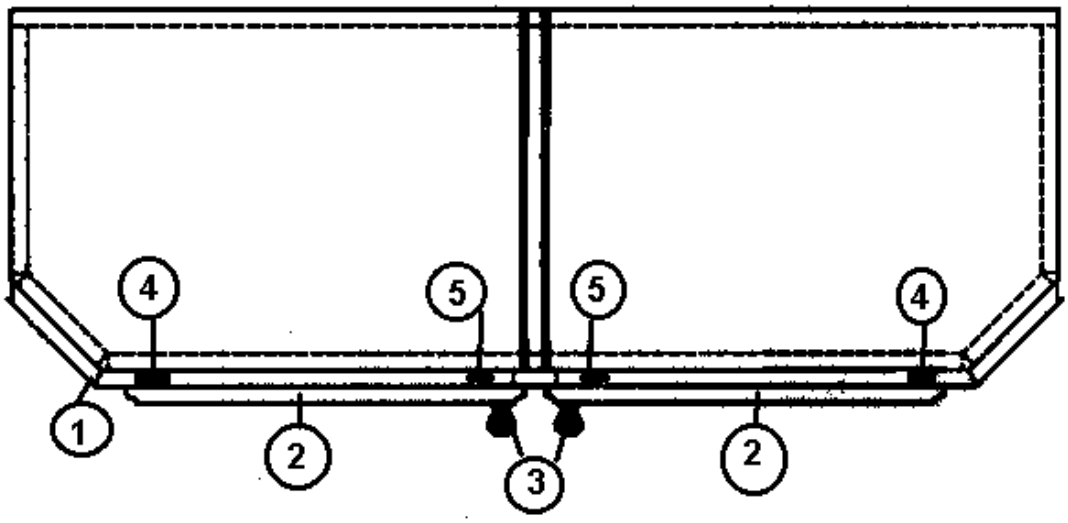

	964865-01	Locker Assembly, Dinette, 390/396
1.	964768-003	Face frame, dinette roof locker
2.	801253-043	Door, raised panel, 18.38” x 11.25”
3.	381835	HANDLE-CHROME/BRASS
4.	381683	Door hinges, hidden
5.	381228-01	Door grabber catch
	964767-003	FRAME-MICROWAVE TOPPER

2005 390/396/Sky Deck XL

FURNITURE, GALLEY

Roof Locker End Cap, 390/396/390 Sky Deck

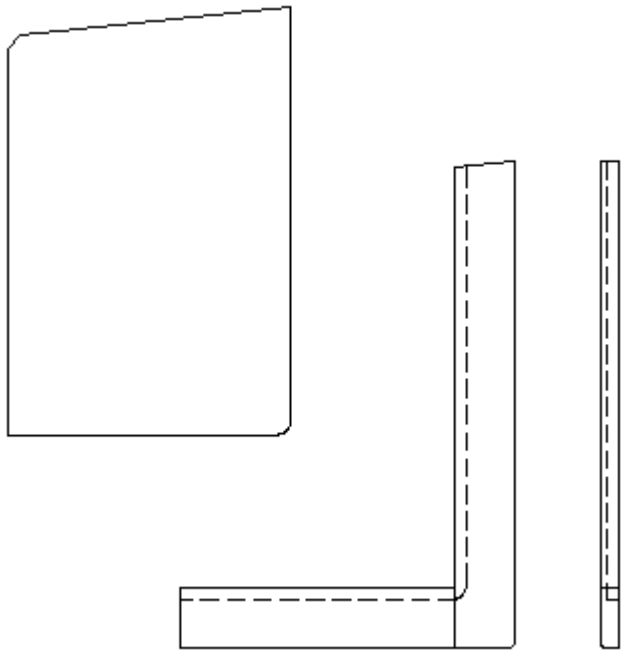

965092-01	END CAP ASSY-LOCKER
964773-013	FRAME-LOCKER END CAP LH, Hickory
964773-016	FRAME-LOCKER END CAP LH, S. OAK
700414	FOAM 3/8 X 72"X 52'

2005 390/396/Sky Deck XL

FURNITURE, GALLEY

Galley, Range w/Oven, 390/396

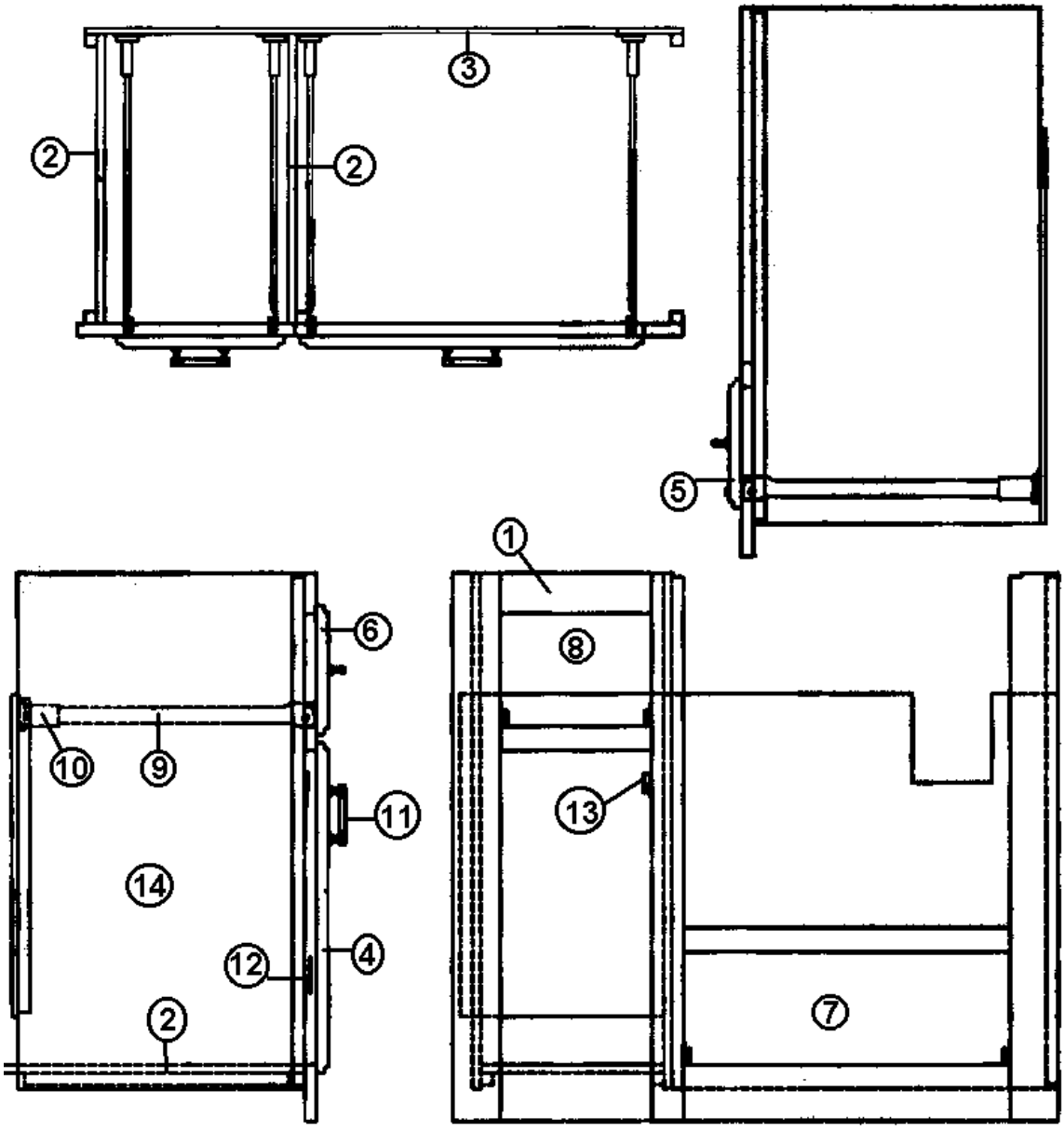

Part numbers on the next page

2005 390/396/Sky Deck XL

FURNITURE, GALLEY

Galley, Range w/Oven, 390/396

	965046-06	Galley, optional oven, 390/396
1.	964763-003	FACE FRAME GALLEY, Hickory
2.	801258-003	PANEL ½” Hickory / Hickory, G2S
3.	800507-03	LAUAN, 3/8" X 4' X 8'
4.	801253-053	DOOR 10.5” X 20.5”, Hickory
5.	801254-043	DRAWER FACE 8” X 21.5”, Hickory
6.	801254-073	DRAWER FACE 8” X 10.5”, Hickory
7.	964907-03	DRAWER BOX- 19.50” X 18.00” X 6.00”
8.	964907-02	DRAWER BOX- 8.50” X 18.00” X 6.00”
9.	381526-03	DRAWER SLIDE-950-RV 18", PR
10.	381526-06	BRACKET ADJUSTABLE REAR (PAIR)
11.	381835	HANDLE-CHROME/BRASS
12.	381683	DOOR HINGES, HIDDEN
13.	381228-01	CATCH GRABBER DOOR
14.	381491	TRASH CAN, ROLL OUT
	381688	BUMP ON

2005 390/396/Sky Deck XL

FURNITURE, GALLEY

Refrigerator Cabinet, 12 CF, 390/396

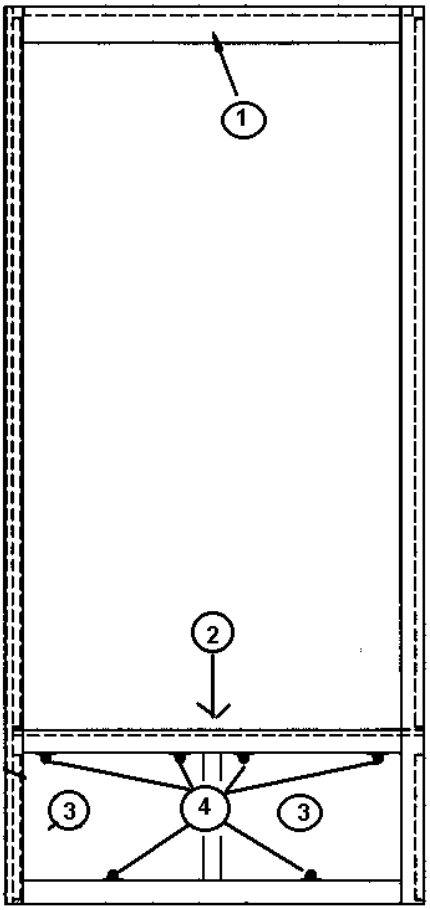

	964853	Refrigerator Cabinet Assembly, 12 CF
1.	964871-003	Face frame, refer cab, side x side, 12 CF
2.	922526	Refer stand assembly
3.	801255-033	Door, louvered, 16.75” x 12.00’
4.	381074	Bull dog catch

2005 390/396/Sky Deck XL

FURNITURE, GALLEY

Galley Spice Cabinet, 396

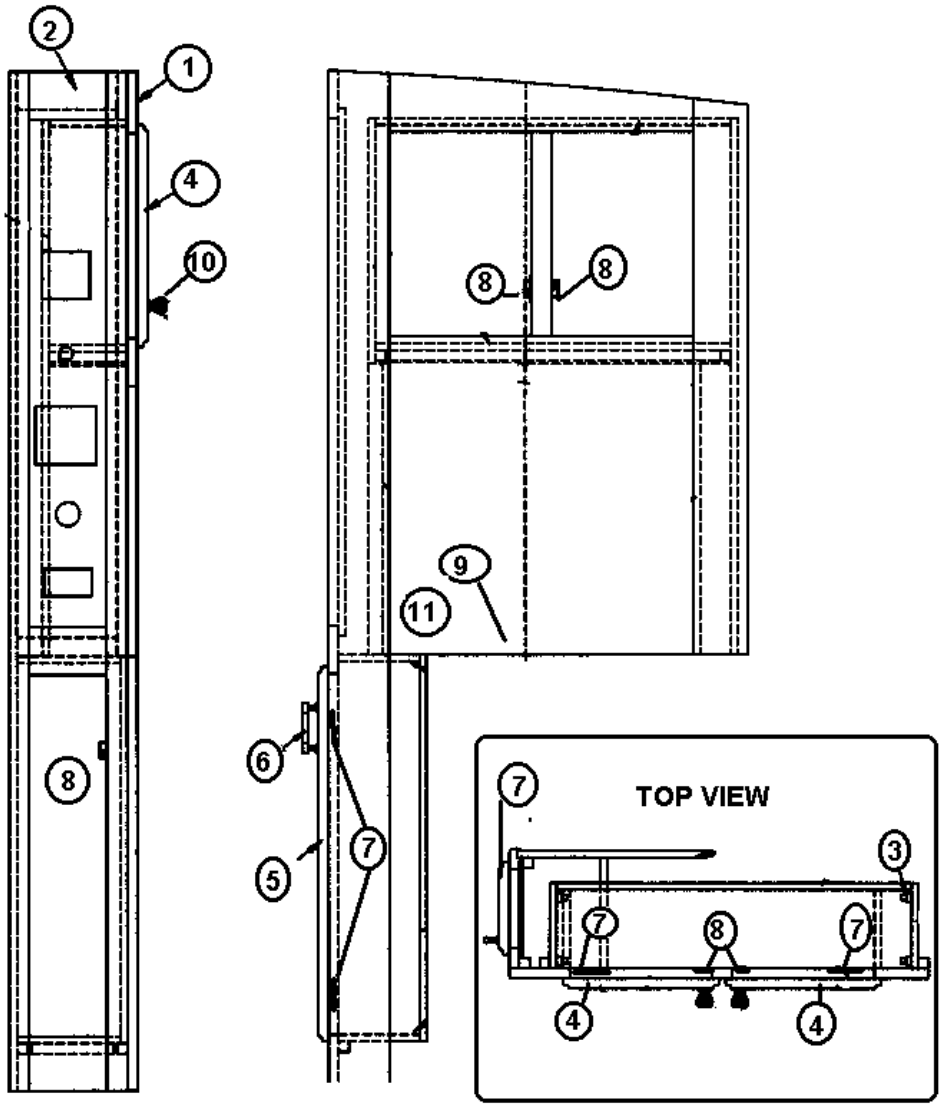

Part Numbers Are on the Next Page

FURNITURE, GALLEY

Galley Spice Cabinet, 396

964854-02	Galley Spice Cabinet, 396
1. 964766-003	Face frame, galley spice cabinet
2. 964788-003	Face frame, galley control panel
3. 381527	Speedy shelf strips
4. 801256-033	Door, frame
5. 801254-123	Drawer face, 6.75” x 27.50”
6. 381835	HANDLE-CHROME/BRASS
7. 381683	Door hinges
8. 381228-01	Door grabber catch
9. 965698-003	Galley shelf assembly, Sky Deck
10. 371377-01	Glass shelf, ¼” x 5.75” x 25.38”
11. 381687-01	Glass Dec RH, 8.62” x 13.38”
12. 381687-02	Glass Dec LH, 8.62” x 13.38”
13. 381796	Door knob, hollow, 1.25”
14. 372210-17	Mirror, 15.25” x 22.92”
14. 381754	Mirror clip

2005 390/396/Sky Deck XL

FURNITURE, GALLEY

End Table, 390/396

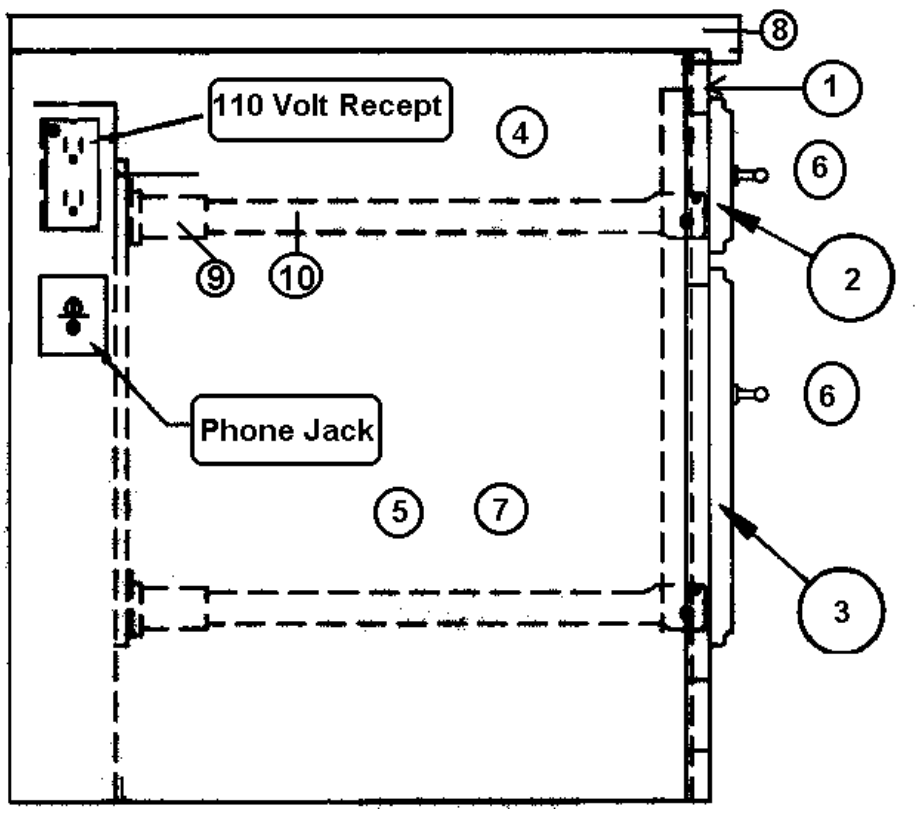

965083-02	End table assembly, 390/396 XL
1. 965084-003	Face frame, End Table
2. 801254-163	Drawer face, 4.75” x 14.25
3. 801254-023	Drawer face, 12.00” x 14.25”
4. 964906-15	Drawer box, 12.25” x 18.00” x 2.75”
5. 964909-03	Drawer box, 12.25” x 18.00” x 10.75”
6. 381835	HANDLE-CHROME/BRASS
7. 114961	Hanger, file folder, Not shown
8. 965059-01	Top assembly, end table
9. 381526-03	Drawer slide, 18”
10. 381526-06	Bracket, adjustable, rear

FURNITURE, GALLEY

Flip Shelf, 396

965353	FLIP SHELF ASSY.- CORIAN
801259-003	PANEL-.5" WOOD VENEER/RAW G1S
365265-01	EDGEBANDING-5/8" NORTHERN OAK
381614	FOLDING SHELF BRACKET

2005 390/396/Sky Deck XL

FURNITURE, GALLEY

Galley, Range w/Oven, 390 Sky Deck

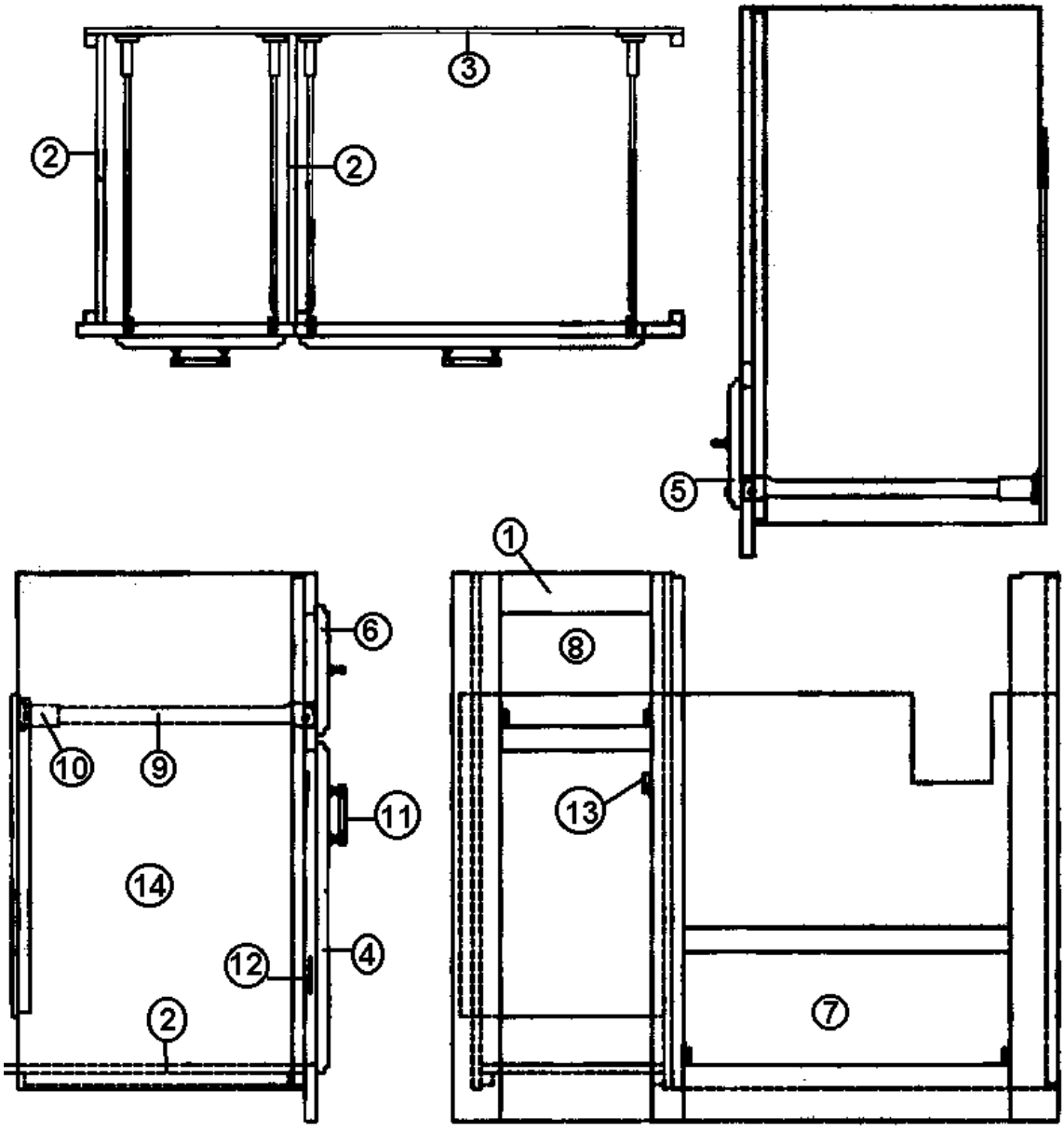

Part numbers on the next page

2005 390/396/Sky Deck XL

FURNITURE, GALLEY

Galley, Range w/Oven, 390 Sky Deck

	965046-06	Galley, optional oven, 390/396
1.	964763-006	FACE FRAME GALLEY, Hickory
2.	801258-006	PANEL ½” Hickory / Hickory, G2S
3.	800507-03	LAUAN, 3/8" X 4' X 8'
4.	801253-056	DOOR 10.5” X 20.5”, Hickory
5.	801254-046	DRAWER FACE 8” X 21.5”, Hickory
6.	801254-076	DRAWER FACE 8” X 10.5”, Hickory
7.	964907-03	DRAWER BOX- 19.50” X 18.00” X 6.00”
8.	964907-02	DRAWER BOX- 8.50” X 18.00” X 6.00”
9.	381526-03	DRAWER SLIDE-950-RV 18", PR
10.	381526-06	BRACKET ADJUSTABLE REAR (PAIR)
11.	381835	HANDLE-CHROME/BRASS
12.	381683	DOOR HINGES, HIDDEN
13.	381228-01	CATCH GRABBER DOOR
14.	381491	TRASH CAN, ROLL OUT
	965635	TOP ASSY-GALLEY
	381688	BUMP ON

2005 390/396/Sky Deck XL

FURNITURE, GALLEY

Galley, Drawer Section 390 Sky Deck

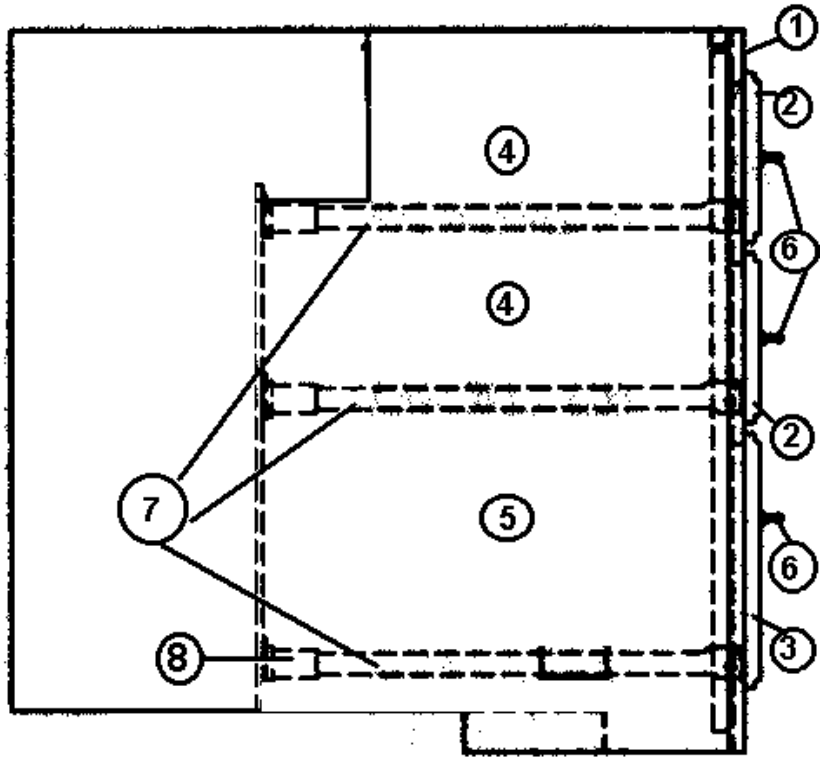

964858-02	Galley Assembly, Drawer Section
1. 964761-006	Face frame, Galley drawer section
2. 801254-016	Drawer face, 8.00” x 14.25”
3. 801254-026	Drawer face, 12.00” x 14.25”
4. 964907-07	Drawer box, 6.00” x 12.25” x 22.00”
5. 964909-05	Drawer box, 10.00” x 12.25” x 22.00”
6. 381835	HANDLE-CHROME/BRASS
7. 381526-05	Drawer slide, 22” pair
8. 381526-06	Drawer slide, Adjustable rear bracket

2005 390/396/Sky Deck XL

FURNITURE, GALLEY

Galley, Sink Section 390 Sky Deck

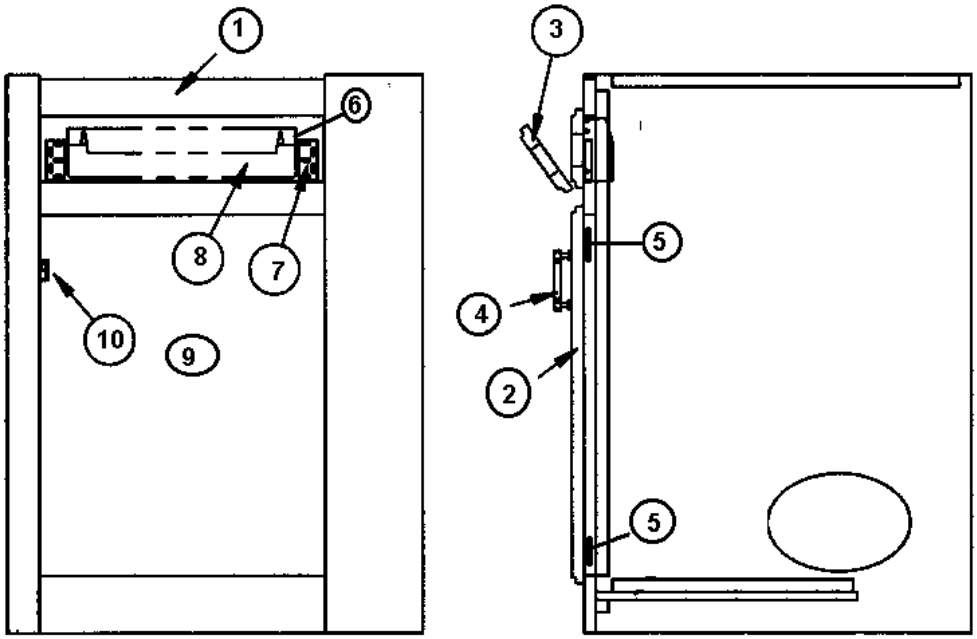

964855-01	Galley, Sink Section 390/396 XL
1. 964764-006	Face frame, galley sink section
2. 801253-076	Door raised panel, 18.38” x 23.00”
3. 801254-116	Drawer face, 4.75’ x 18.38”
4. 381835	HANDLE-CHROME/BRASS
5. 381683	Door hinges
6. 385940	Mirror pull, brass
7. 381685	Scissor hinge, sink tip-out tray
8. 381686	Tray, plastic, 14”
9. 964911-01	Shelf insert assembly
10. 381228-01	Door grabber catch
601897	SINK COVER-RH-MIDNIGHT
601897-01	SINK COVER-RH-SANDSTONE
601897-02	SINK COVER-RH-EVEREST
601902	SINK COVER, LH-MIDNIGHT
601902-01	SINK COVER, LH-SANDSTONE
601902-02	SINK COVER, LH-EVEREST
800571-016	MOLDING FLAT .52”W X 80" oak
381678	SPLASH PROTECTOR GLASS GALLEY
200980-01	Tray, silverware

2005 390/396/Sky Deck XL

FURNITURE, GALLEY

Refrigerator Cabinet, 390 Sky Deck

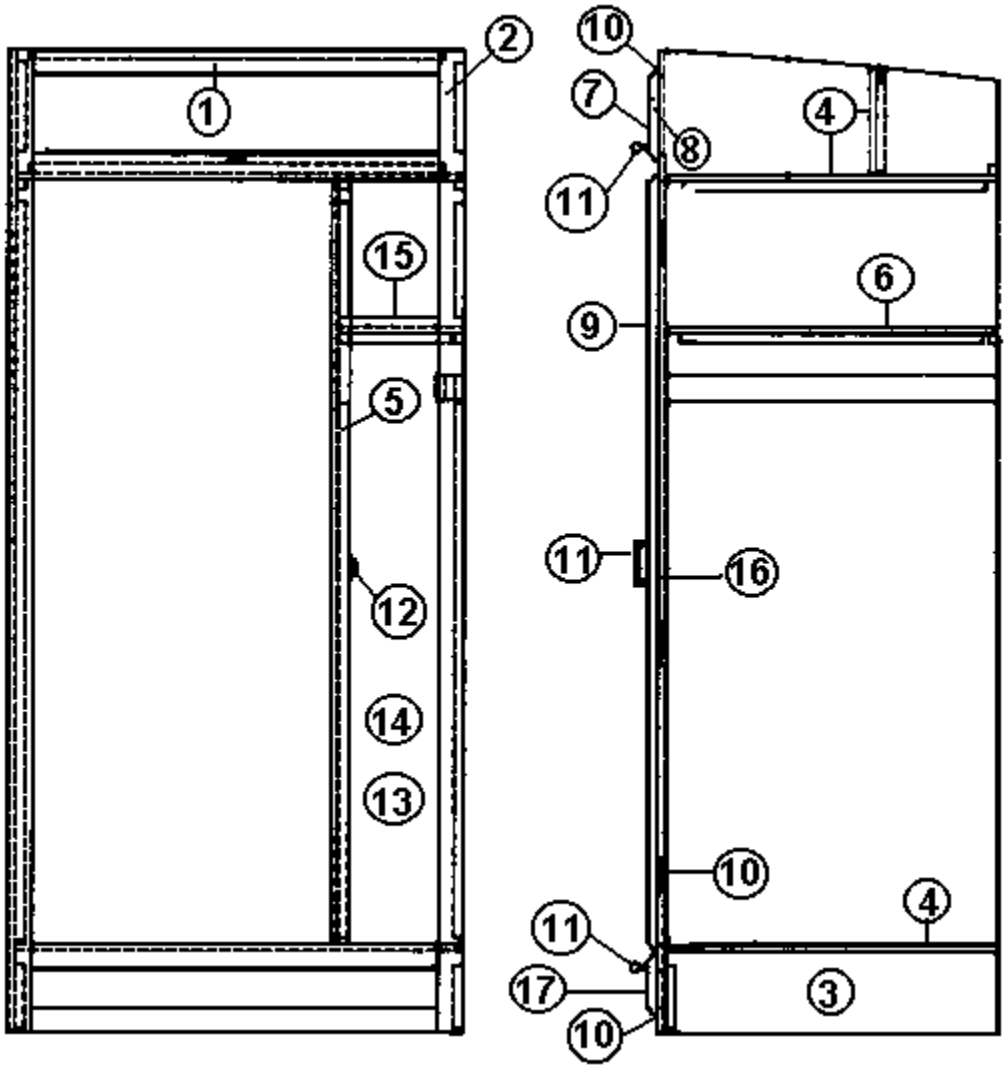

See P/N on the next page.

2005 390/396/Sky Deck XL

FURNITURE, GALLEY

Refrigerator Cabinet, 390 Sky Deck

	965968	Refrigerator Cabinet Assembly
1.	965670-006	Face frame, cabinet, 10 cu. ft.
2.	801422	Refer panel, forward
3.	922661	Refrigerator stand assembly
4.	801179-006	Panel, ½" oak vinyl/raw
5.	801181-006	Panel, 5/32" wood/raw
6.	801180-006	Panel, ½" wood/wood
7.	801254-196	Drawer face, 7.00" x 33.00"
8.	381147	Spring prop
9.	801254-146	Drawer face, 8.00" x 60.75"
10.	381683	Door hinges, hidden
11.	381835	HANDLE-CHROME/BRASS
12.	381228	Grabber catch
13.	381631-01	Pantry pullout
14.	381831-05	white basket, white
15.	800573-016	Molding, flat, 1.13"
16.	381109	Bunk latch, pull out pantry
17.	801254-066	Drawer face, 4.75" x 33.00"

2005 390/396/Sky Deck XL

FURNITURE, GALLEY

Galley Spice Cabinet, 390 Sky Deck

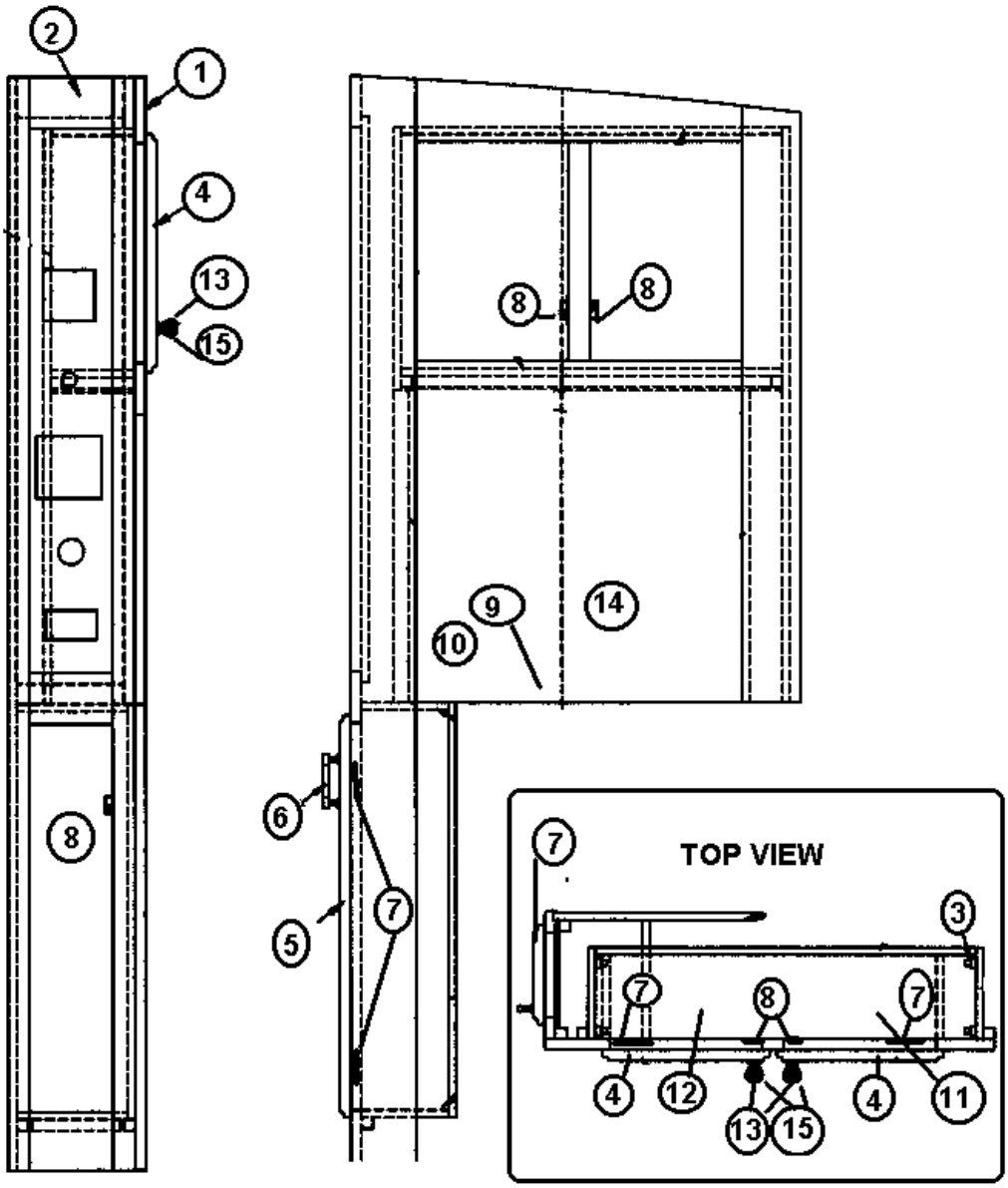

Part Numbers On the Next Page

2005 390/396/Sky Deck XL

FURNITURE, GALLEY

Galley Spice Cabinet, 390 Sky Deck

965815	Galley Spice Cabinet, 390/396 XL
1. 964766-006	Face frame, galley spice cabinet
2. 964788-006	Face frame, galley control panel
3. 381527	Speedy shelf strips
4. 801256-036	Door, frame
5. 801254-126	Drawer face, 6.75” x 27.50”
6. 381835	HANDLE-CHROME/BRASS
7. 381683	Door hinges
8. 381228-01	Door grabber catch
9. 965698	Galley shelf assembly, Sky Deck
10. 371377-01	Glass shelf, ¼” x 5.75” x 25.38”
11. 381687-01	Glass Dec RH, 8.62” x 13.38”
12. 381687-02	Glass Dec LH, 8.62” x 13.38”
13. 381796	Knob, Hollow 1.25"
14. 372210-17	Mirror, 15.25” x 22.92”
14. 381754	Mirror clip

2005 390/396/Sky Deck XL

FURNITURE, GALLEY

Roof Locker, LH Galley, 390 Sky Deck

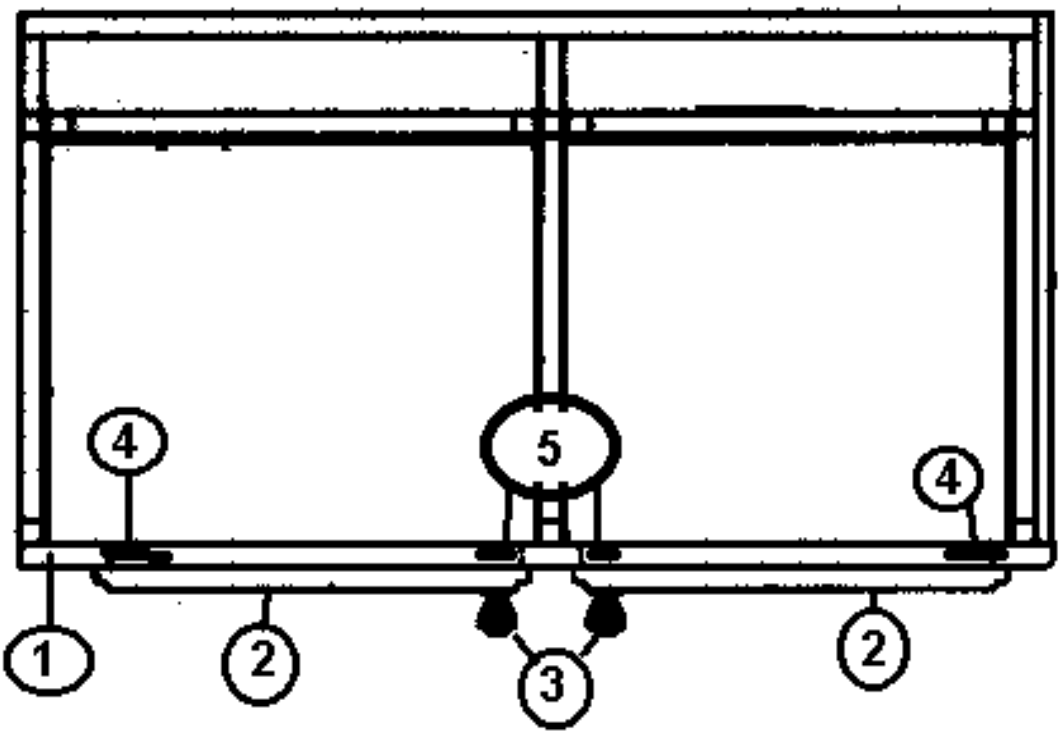

	964862-02	Locker Assembly, LH Galley
1.	964771-006	Face frame, LH Galley
2.	801253-036	Door, raised panel, 14.50” x 16.25”
3.	381835	HANDLE-CHROME/BRASS
4.	381683	Door hinges
5.	381228-01	Door grabber catch

2005 390/396/Sky Deck XL

FURNITURE, GALLEY

Stairway, 390 Sky Deck

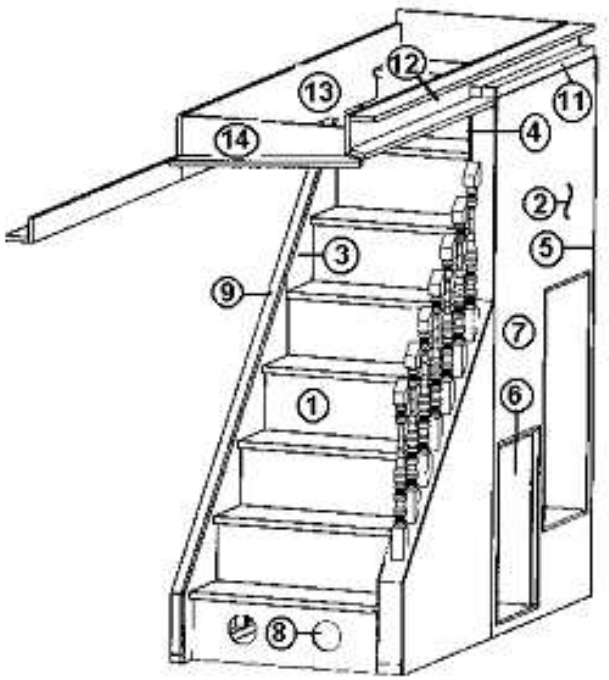

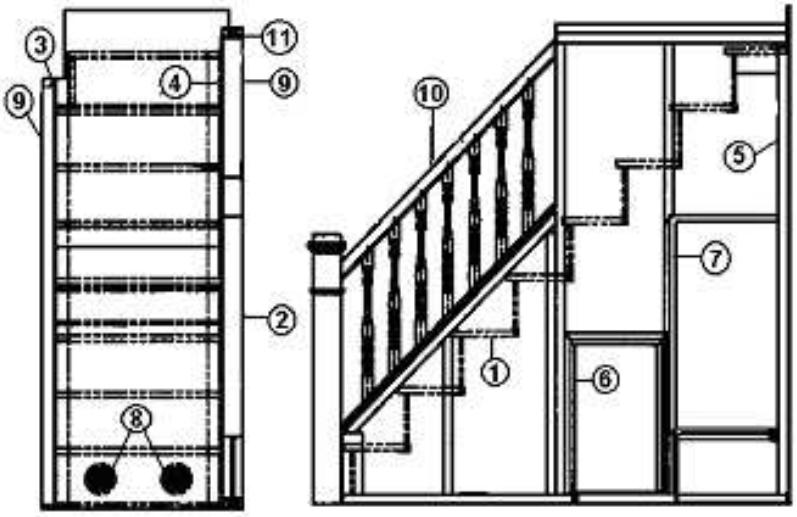

Part Numbers On The Next Page

2005 390/396/Sky Deck XL

FURNITURE, GALLEY

Stairway, 390 Sky Deck

	965720	Assembly, Stairway
1.	965699	Assembly, steps
2.	965700	Assembly, outer wall
3.	965701	Assembly, Inner wall
4.	801258-006	Panel, ½" Oak/Oak
5.	800500	Mounting cleat, fir, 1 ½" x 3 ½"
6.	965702	Cabinet, icemaker
7.	965704	Cabinet, chair storage
8.	601244-01	Register, Rotaire
9.	800575-016	Molding, corner
10.	965653	Assembly, stair railing
11.	801267-006	Molding, crown
12.	965705-006	Assembly, LH top stairway molding
13.	965706-006	Assembly, RH top stairway molding
14.	965707-006	Header top stairway
	965803-006	HEADER/MOLDING ASSY-STAIRS

2005 390/396/Sky Deck XL

FURNITURE, GALLEY

Step Assembly, 390 Sky Deck

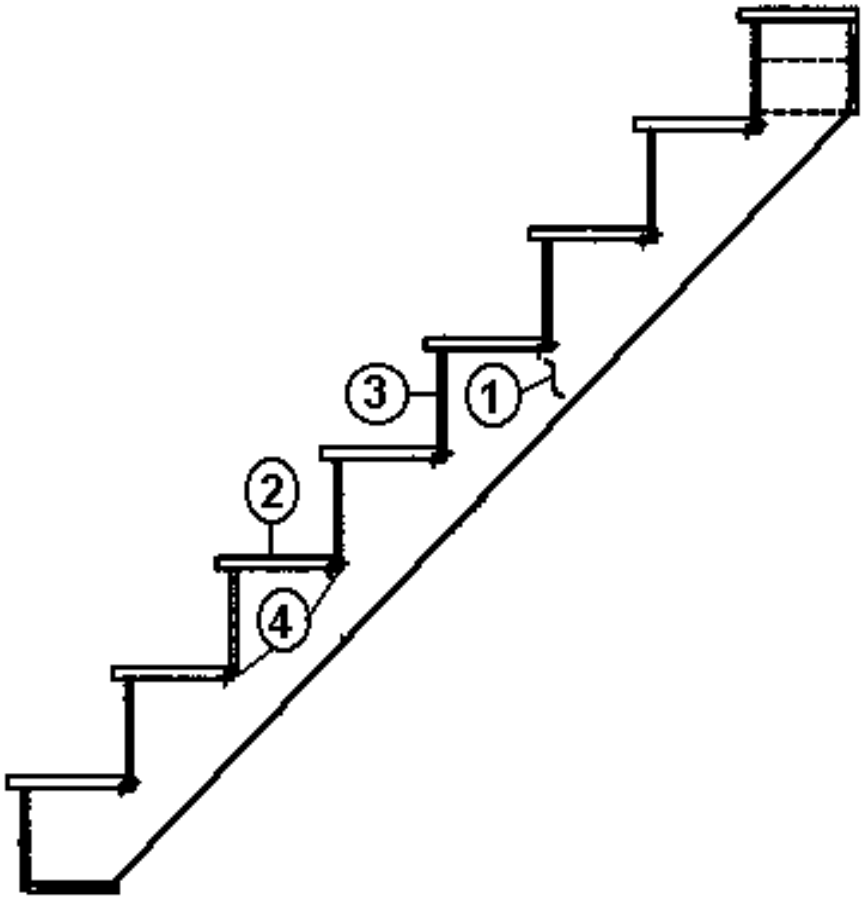

1.	965699	Assembly, Steps
2.	800428	1” Oak
3.	801259-006	Panel, ½” wood veneer/Raw
4.	101134	Aluminum angle, 1/8” x 1” x 1 ½”

2005 390/396/Sky Deck XL

FURNITURE, GALLEY

Staircase Outer Wall, 390 Sky Deck

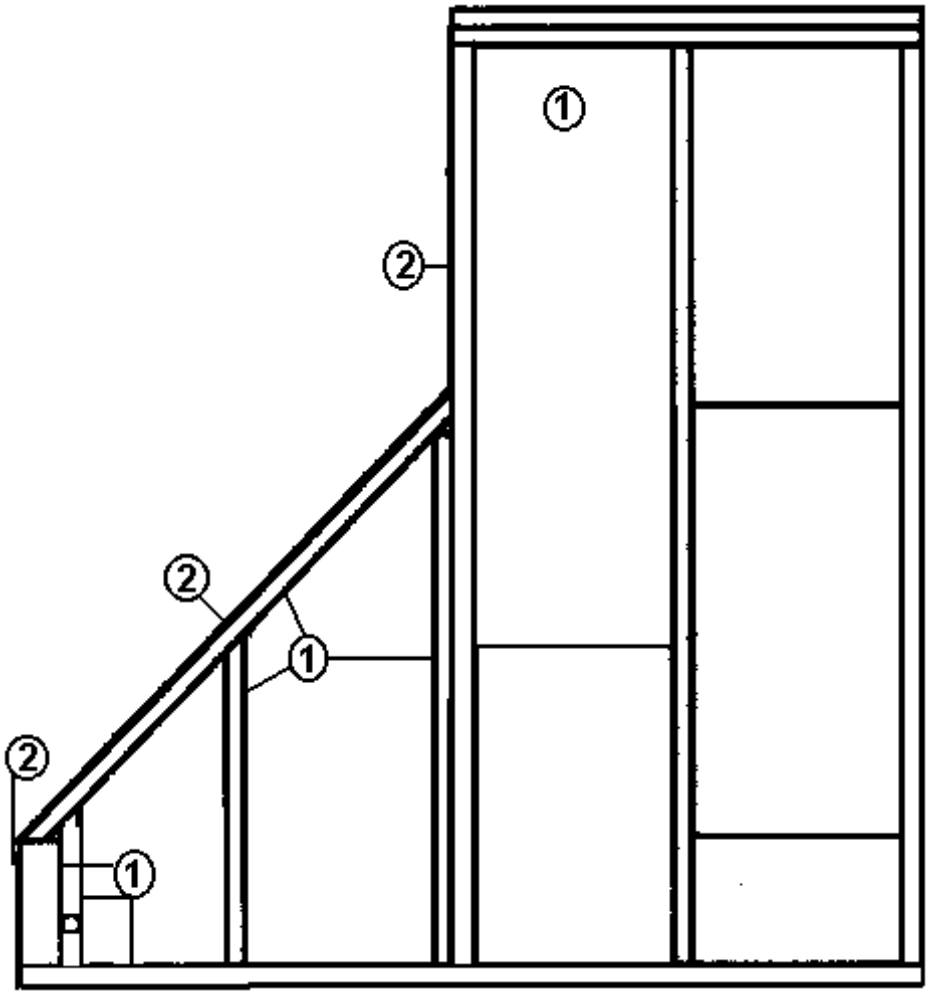

	965700	Assembly Outer Wall
1.	800500	Fir, 1 ½" x 3 ½"
2.	801181-006	Panel, Natural Oak, Oak/Raw

2005 390/396/Sky Deck XL

FURNITURE, GALLEY

Staircase Inner Wall, 390 Sky Deck

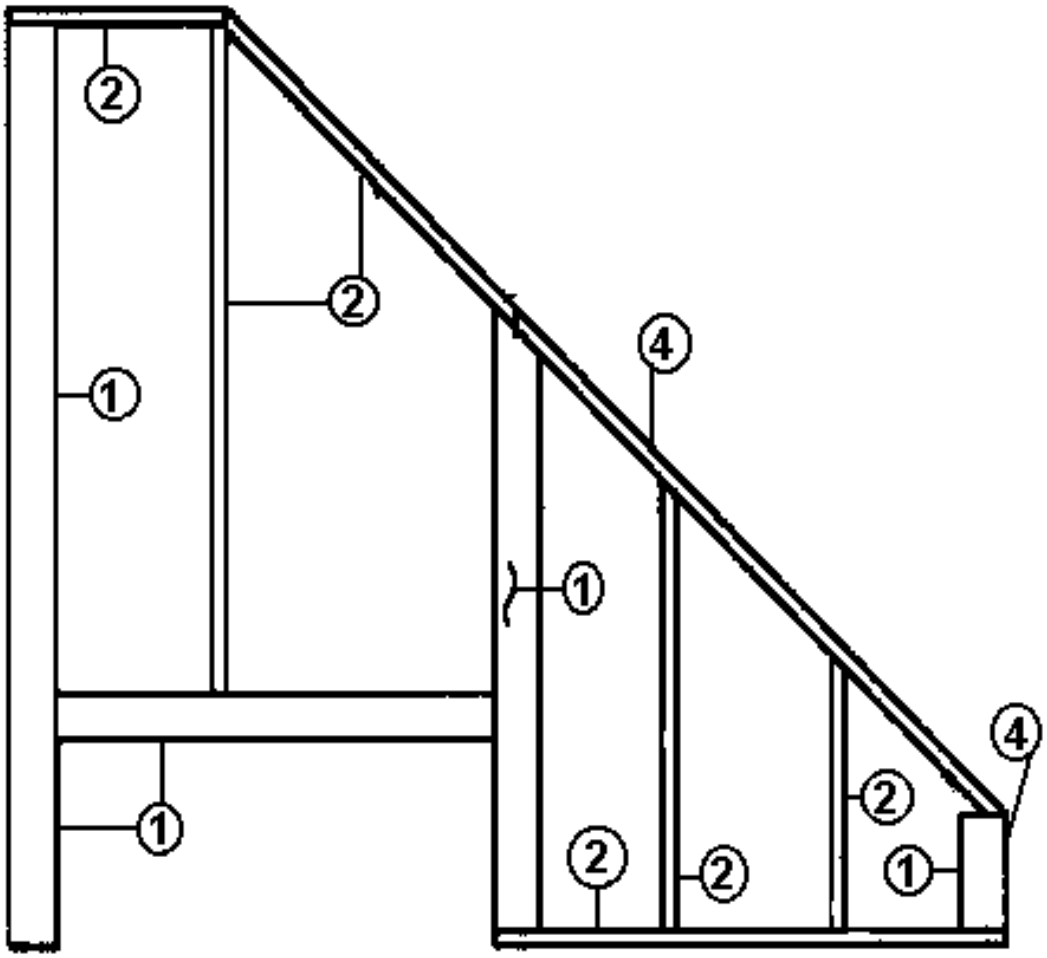

	965701	Assembly, Inner wall
1.	800500	Fir, 1 ½” x 3 ½”
2.	800478	Pine, 1 ½’ x 1 1/8”
3.	801259-006	Panel, ½” oak veneer/raw
4.	801260-006	Panel, 5/32”, Oak Veneer/raw

2005 390/396/Sky Deck XL

FURNITURE, GALLEY

Icemaker Cabinet, 390 Sky Deck

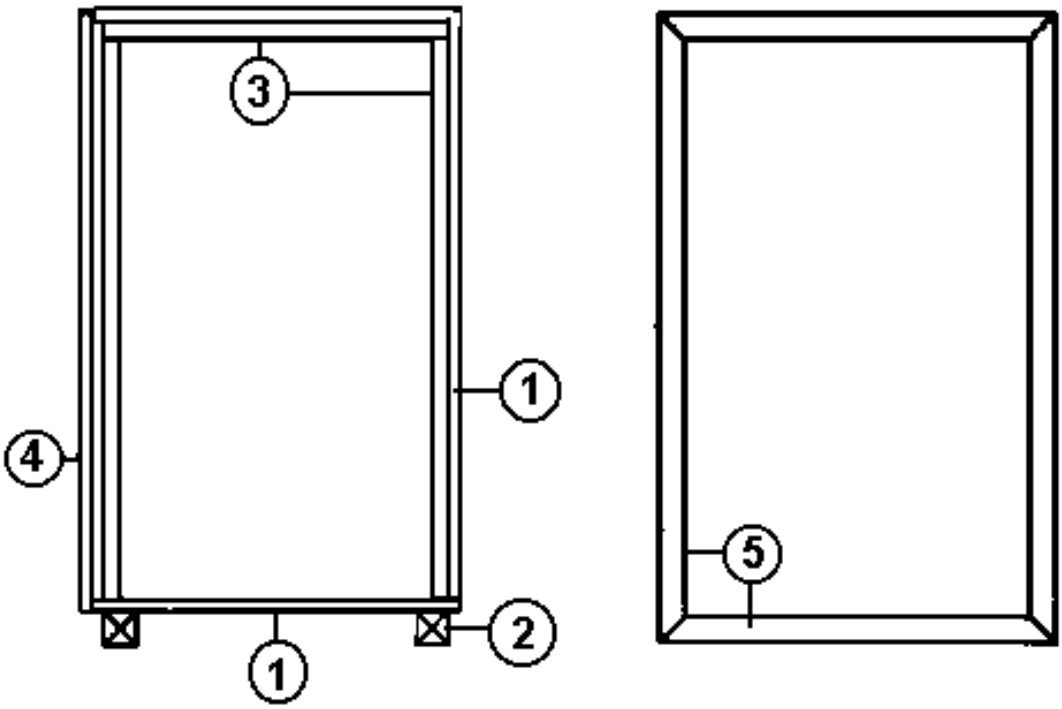

	965702	Assembly, Icemaker Cabinet
1.	801179-006	Panel, ½" Oak Vinyl/Raw
2.	800478	Pine, 1 ½" x 1 1/8"
3.	800506-06	½" plywood
4.	800506-04	¾" plywood
5.	80573-016	Flat Molding, 1 1/8"

2005 390/396/Sky Deck XL

FURNITURE, GALLEY

Closet, Chair Storage, 390 Sky Deck

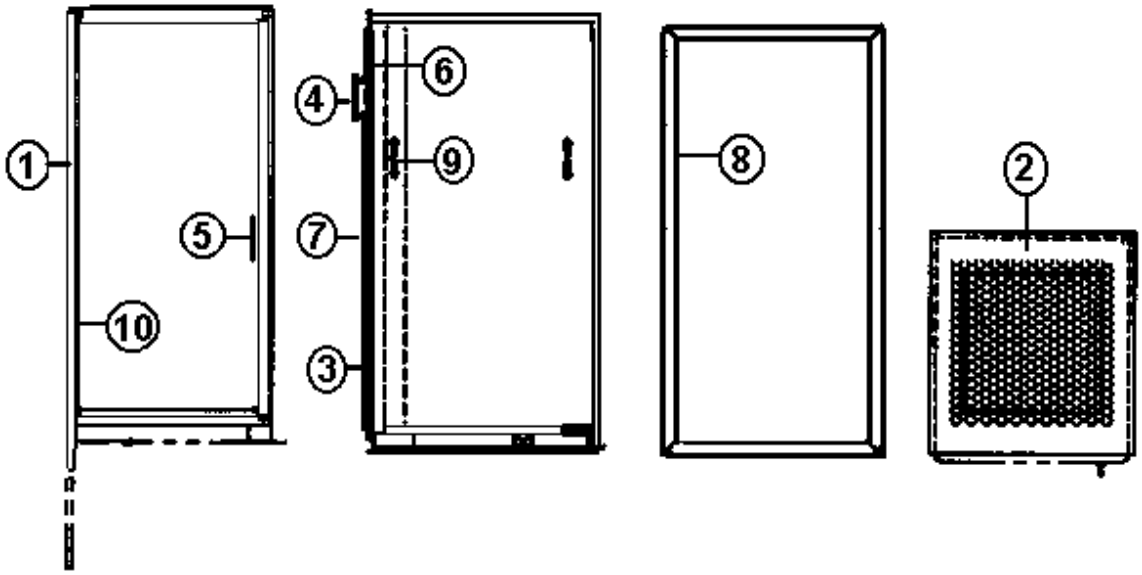

	965704	Closet, Chair Storage
1.	801179-006	Panel, ½” oak veneer/raw
2.	454073	Perforated metal, 14” x 14”
3.	801255-056	Door, louvered, 16 ½” x 34 3/8”
4.	381835	HANDLE-CHROME/BRASS
5.	381228-01	Door grabber catch
6.	381607	Hinge, inset, 110 degrees
7.	381688	Rubber bump on
8.	800573-016	Flat molding, 1 1/8”
9.	381566	Loop, footman, steel
10.	800610	Panel, ½” oak, G1S

2005 390/396/Sky Deck XL

Sky Deck Furniture

Stairway Kit

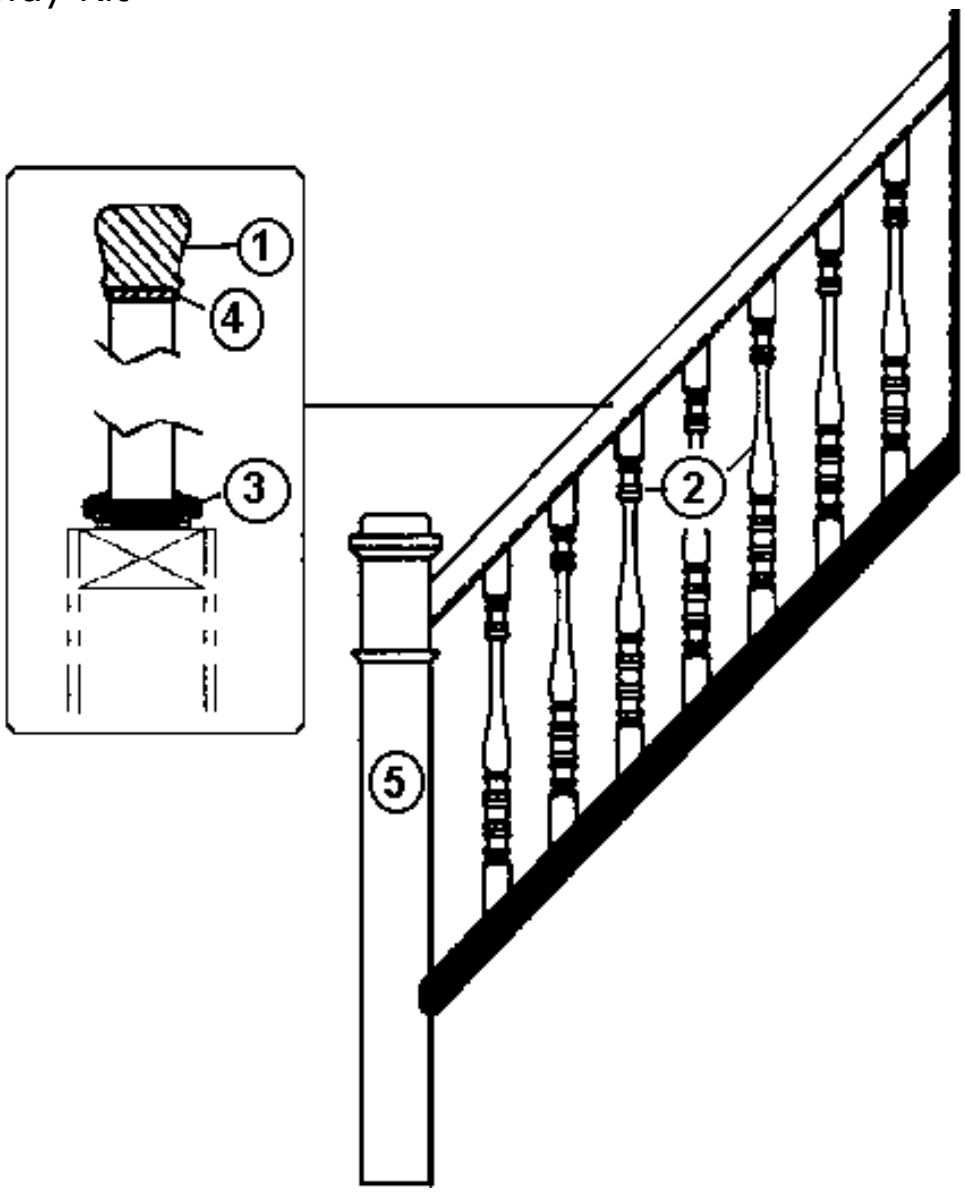

	965653	Assembly, Stairway Kit
1.	801417	Handrail, Natural oak
2.	801419	Baluster, Natural oak
3.	801418	Shoe rail, Natural Oak
4.	801420	¼” fillet, Natural oak
5.	801421	Box, newel, natural Oak

2005 390/396/Sky Deck XL

FURNITURE, GALLEY

Roof Locker, Dinette RH, 390 Sky Deck

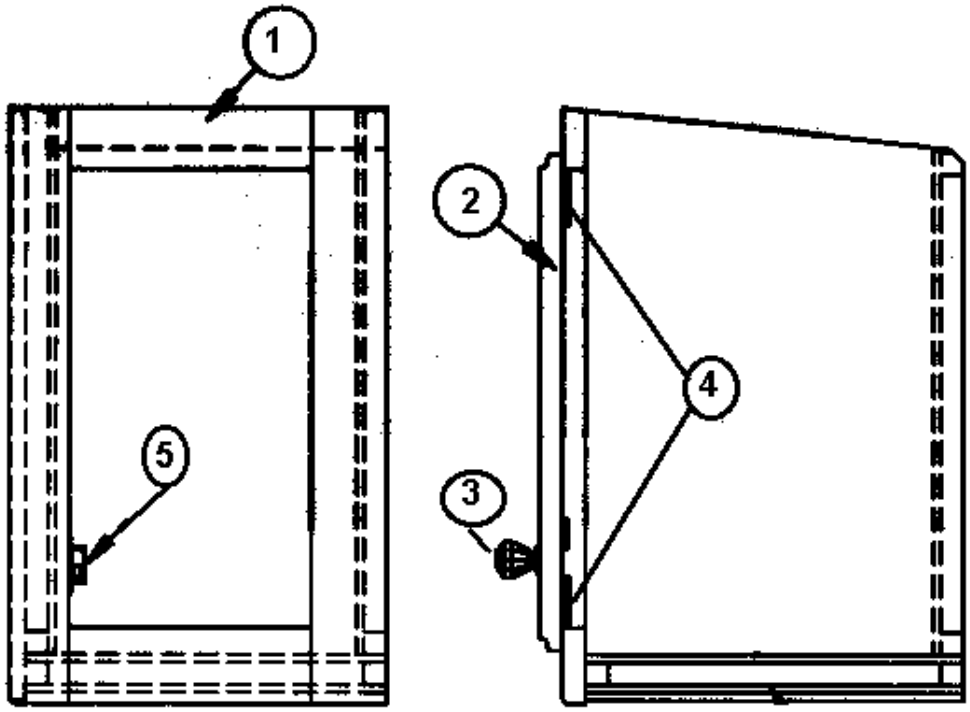

	964866-01	Locker Assembly, Dinette RH
1.	964787-006	Face frame, dinette overhead
2.	801253-016	Door, raised panel, 9.00” x 16.25”
3.	381835	HANDLE-CHROME/BRASS
4.	381683	Door hinges
5.	381228-01	Door grabber catch

2005 390/396/Sky Deck XL

FURNITURE, GALLEY

Roof Locker, Dinette, 390 Sky Deck

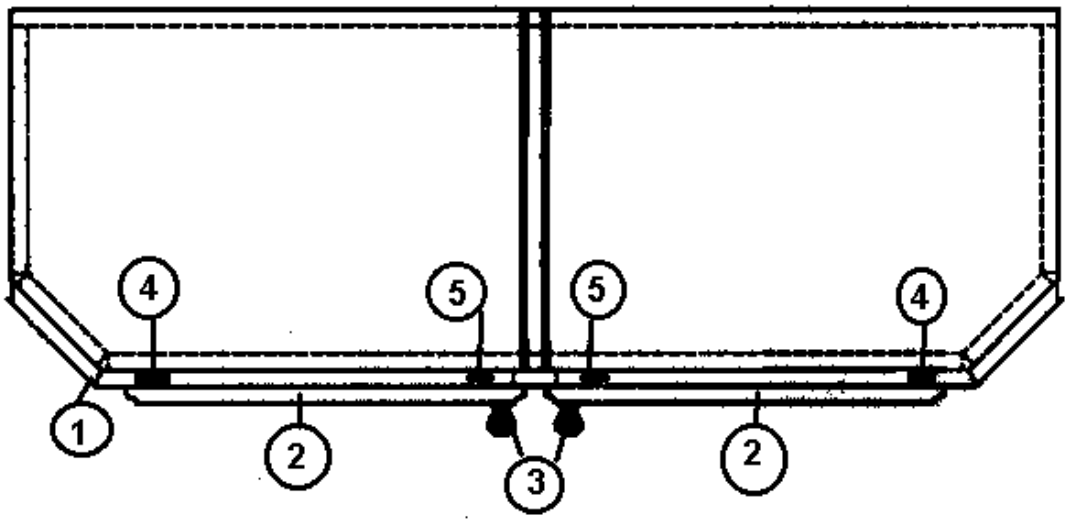

964865-01	Locker Assembly, Dinette
1. 964768-006	Face frame, dinette roof locker
2. 801253-046	Door, raised panel, 18.38” x 11.25”
3. 381835	HANDLE-CHROME/BRASS
4. 381683	Door hinges, hidden
5. 381228-01	Door grabber catch
964767-006	FRAME-MICROWAVE TOPPER

2005 390/396/Sky Deck XL

FURNITURE, GALLEY

Galley Spice Cabinet, 390 Sky Deck

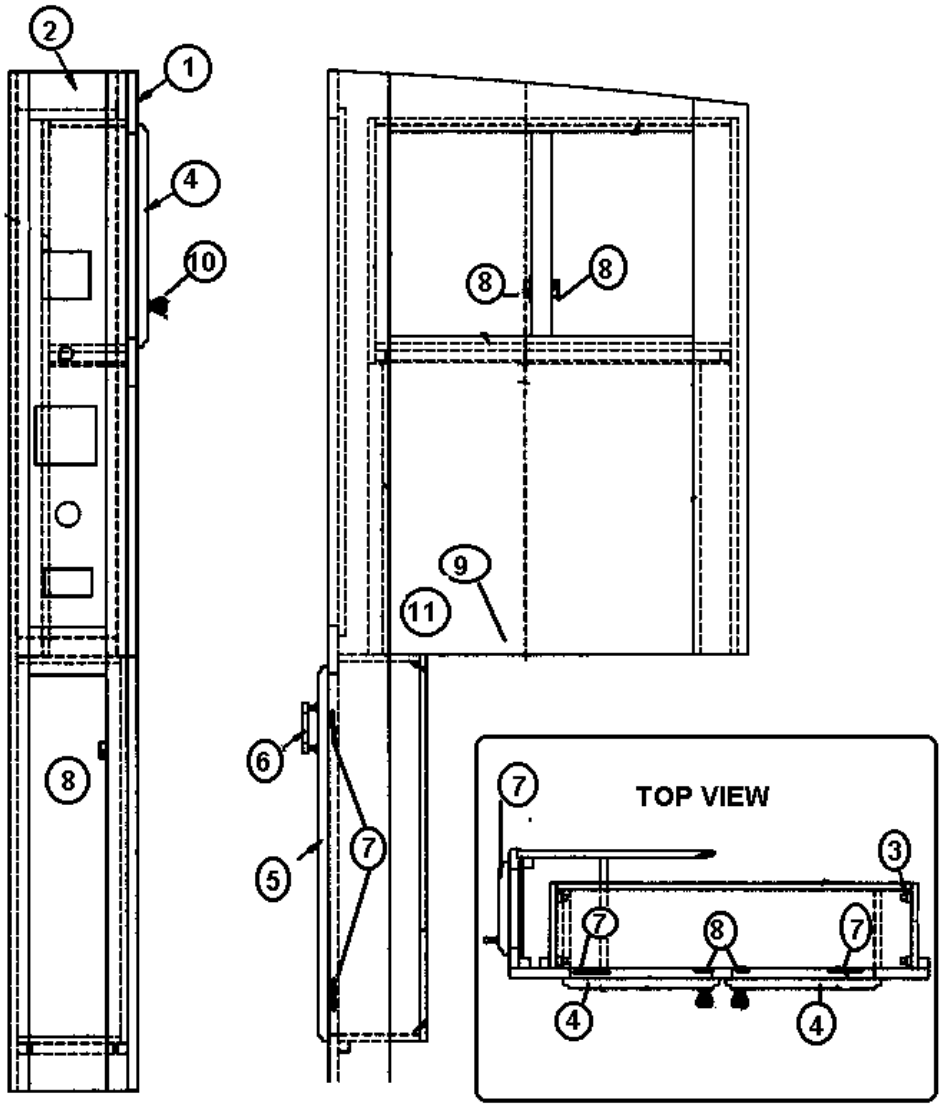

Part Numbers Are on the Next Page

2005 390/396/Sky Deck XL

FURNITURE, GALLEY

Galley Spice Cabinet, 390 Sky Deck

	964854-02	Galley Spice Cabinet, 396
1.	964766-006	Face frame, galley spice cabinet
2.	964788-006	Face frame, galley control panel
3.	381527	Speedy shelf strips
4.	801256-036	Door, frame
5.	801254-126	Drawer face, 6.75” x 27.50”
6.	381835	HANDLE-CHROME/BRASS
7.	381683	Door hinges
8.	381228-01	Door grabber catch
9.	965698 -006	Galley shelf assembly, Sky Deck
10.	371377-01	Glass shelf, ¼” x 5.75” x 25.38”
11.	381687-01	Glass Dec RH, 8.62” x 13.38”
12.	381687-02	Glass Dec LH, 8.62” x 13.38”
13.	381796	Door knob, hollow, 1.25”
14.	372210-17	Mirror, 15.25” x 22.92”
14.	381754	Mirror clip

2005 390/396/Sky Deck XL

FURNITURE, GALLEY

Galley, Cook Top, 3 Burner w/Oven 390 Sky Deck

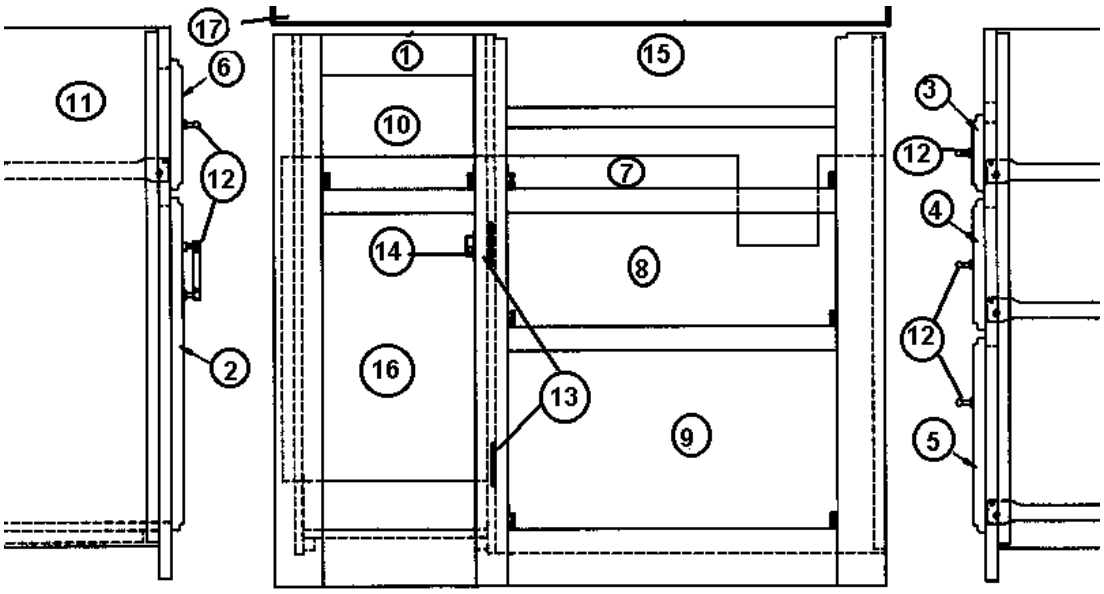

964856-05	Galley, cook top Section, Sky Deck
1. 964762-006	Face frame, Galley, cook top section
2. 801253-056	Door, raised panel, 10.50” x 20.5”
3. 801254-036	Drawer face, 4.75” x 21.50”
4. 801254-046	Drawer face, 8.00” x 21.50”
5. 801254-056	Drawer face, 12.00” x 21.50”
6. 801254-076	Drawer face, 8.00” x 10.50”
7. 964906-02	Drawer box, 2.75” x 19.50” x 18.00”
8. 964907-03	Drawer box, 6.00” x 19.50” x 18.00”
9. 964909-02	Drawer box, 10.00” x 19.50” x 18.00”
10. 964907-02	Drawer box, 6.00” x 8.50” x 18.00”
11. 381526-03	Drawer slide, 18”, pair
12. 381835	HANDLE-CHROME/BRASS
13. 381683	Door hinges
14. 381228-01	Door grabber catch
15. 690396-10	COOKTOP-3 BURNER, S. S. TOP
16. 381491	Trash can, roll out
17. 601913	Corian galley top, Midnight
17. 601913-01	Corian galley top, Sandstone
17. 601913-02	Corian galley top, Everest

2005 390/396/Sky Deck XL

FURNITURE, GALLEY

Refrigerator Cabinet, 12 Cu. Ft., 390 Sky Deck

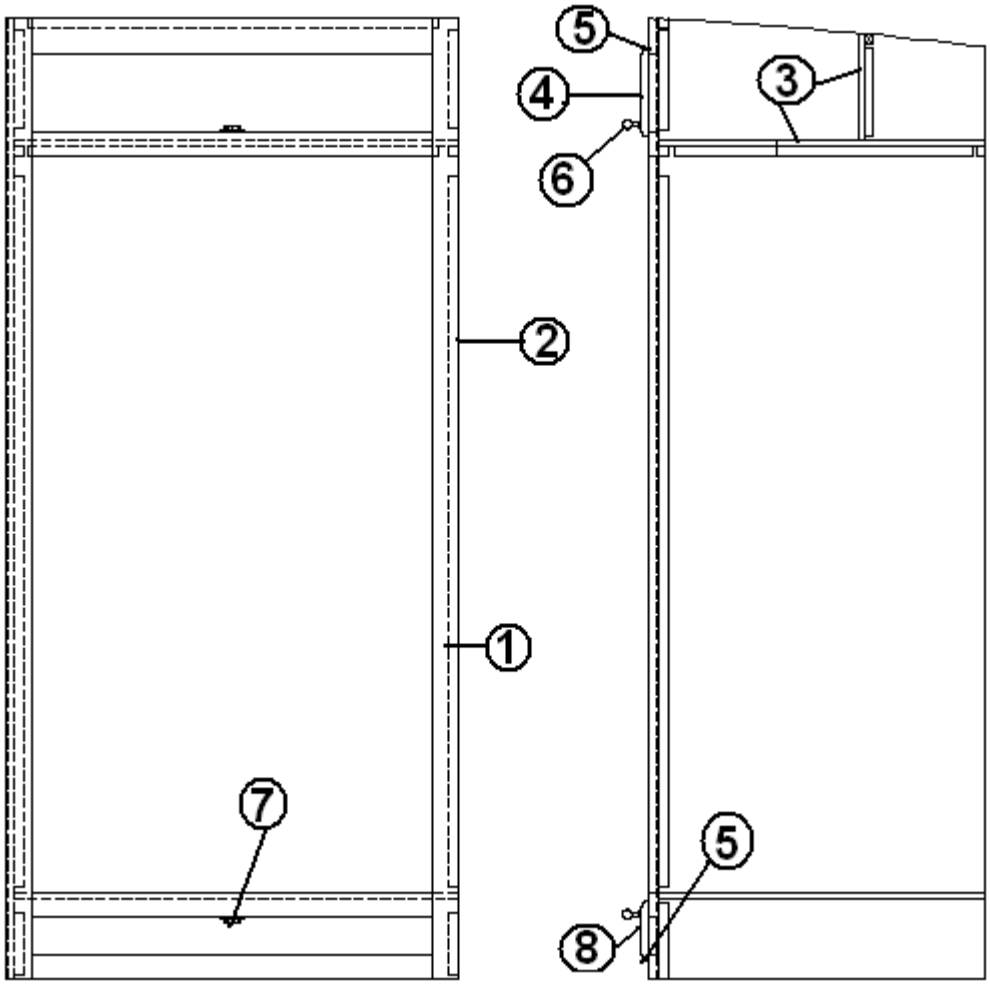

	965977	Refrigerator cabinet, 12 C/F
1.	965976-006	Face frame, refer cabinet
2.	801422	Forward refer cabinet panel
3.	801179-006	Panel, Oak/Raw, ½" x 4' x 8'
4.	801254-196	Drawer face, 7.00" x 33.00"
5.	381683	Hinges, Hidden
6.	381835	HANDLE-CHROME/BRASS
7.	381228-01	Door grabber catch
8.	801254-06	Drawer face, 4.75" x 33.00"
	381147	Spring prop

2005 390/396/Sky Deck XL

FURNITURE, CAB/LOUNGE

Roof Locker, Front Cab, 390/396

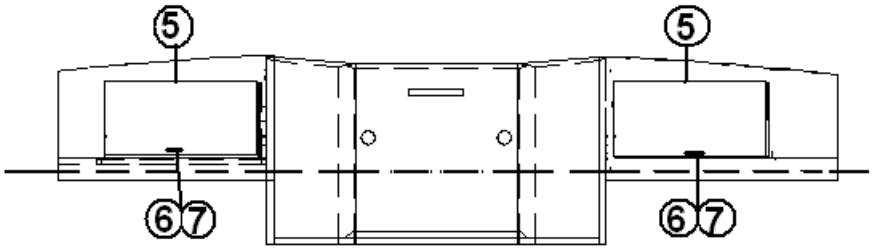

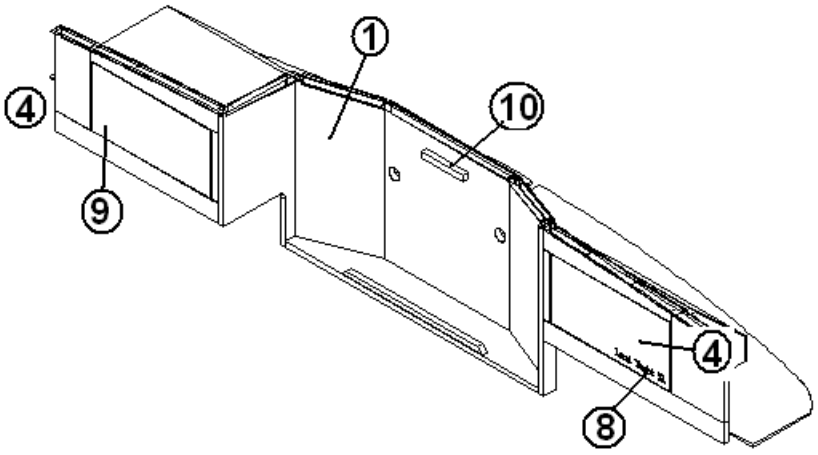

	966144	LOCKER ASSY-FRONT LINER
1.	966143-003	FACE FRAME, HICKORY
2.	701538-01	CARPET-ECONOLIER
3.	702992	HEADLINER, CEILING
3.	*702992-02	Headliner, Neutral
4.	371375-05	GLASS-3/16"TINTED 8.38" X 16.813”
5.	381654	HINGE-NON BORE GLASS DOOR.BLACK
6.	381653	LATCH-SINGLE TOUCH BLACK
7.	381707	STRIKE W/PULL-GLASS DOOR BLACK
8.	386034	DECAL-AIRSTREAM 7.5"
9.	386033	DECAL-LAND YACHT 7.5"
10.	365013	TAPE CHARCOAL LOW DENSITY FOAM
	964802-003	BLOCK-CORNER RS FRT.R/L, Hickory
	964803-003	BLOCK-CORNER CS FRT.R/L, Hickory

**Replace 702992 during model year PCN 5130. One roll sent to service 5/11/05

2005 390/396/Sky Deck XL

FURNITURE, CAB/LOUNGE

Cab, Upper Side Panel, Roadside, 390/396

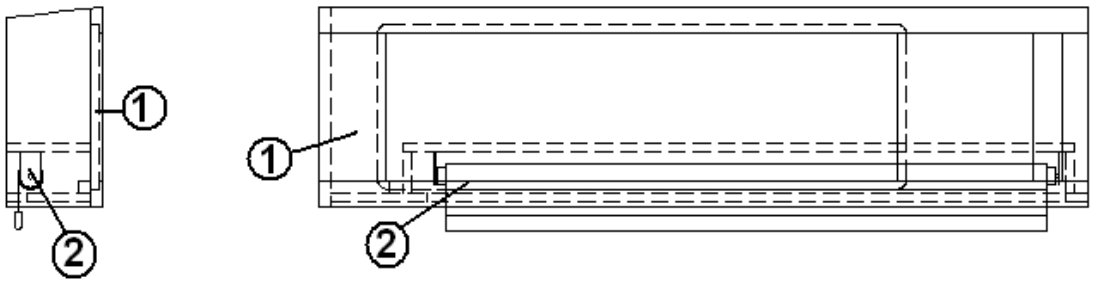

	966142	CAB SIDE PANEL, RS
1.	966141-003	FACE FRAME-RS SIDE CAB, Hickory
2.	702818	SHADE-KOOL SCREEN BLK-35'CUT P
	702988-01	WALL WEAVE 1/8", HYROGLYPHIC

2005 390/396/Sky Deck XL

FURNITURE, CAB/LOUNGE

Cab, Upper Side Panel, Curbside, 390/396

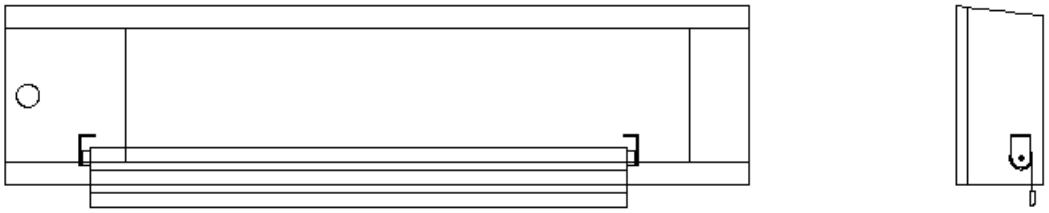

965073	CAB SIDE PANEL ASSY. CS
965066-003	FACE FRAME CAB SIDE, RS, HICKORY
702818	SHADE-KOOL SCREEN BLK-35'CUT P
702988-01	WALL WEAVE 1/8"

2005 390/396/Sky Deck XL

FURNITURE, CAB/LOUNGE

Cab Cabinet, 390/396

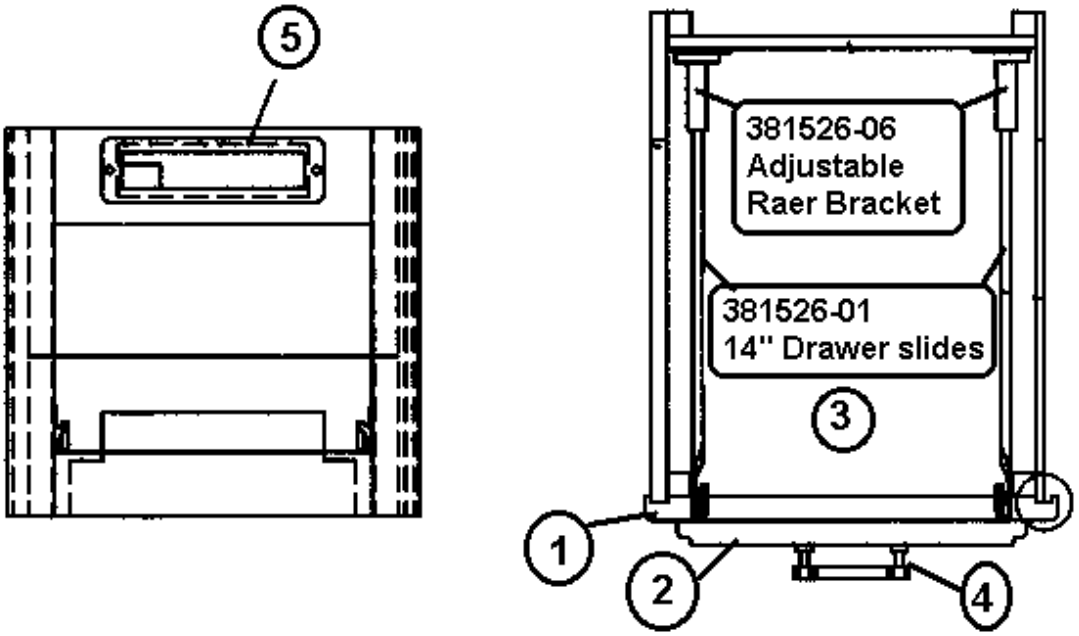

965071-01	Cab Cabinet Assembly390/396 XL
1. 965086-003	Face frame, cab cabinet
2. 801254-073	Drawer face, 8.00” x 10.50”
3. 964907-10	Drawer box, 6.00” x 14.00” x 8.50”
4. 381835	HANDLE-CHROME/BRASS
5. 203234	Pop up cup holder, black

2005 390/396/Sky Deck XL

FURNITURE, CAB/LOUNGE

Roof Locker, Curbside, 390/396

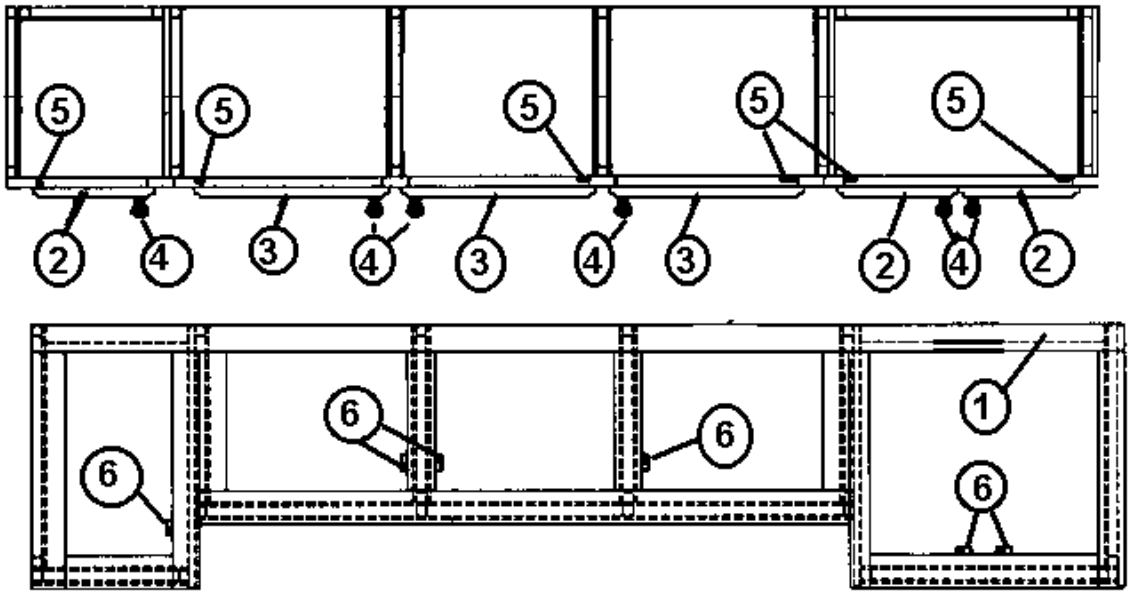

964864-01	Locker Assembly, CS Lounge
1. 964769-003	Face frame, CS lounge, roof locker
2. 801253-013	Door, raised panel, 9.00’ x 16.25”
3. 801253-023	Door, raised panel, 14.5” x 11.25”
4. 381835	HANDLE-CHROME/BRASS
5. 381683	Door hinges
6. 381228-01	Door grabber catch

2005 390/396/Sky Deck XL

FURNITURE, CAB/LOUNGE

Roof Locker, Roadside 390/396

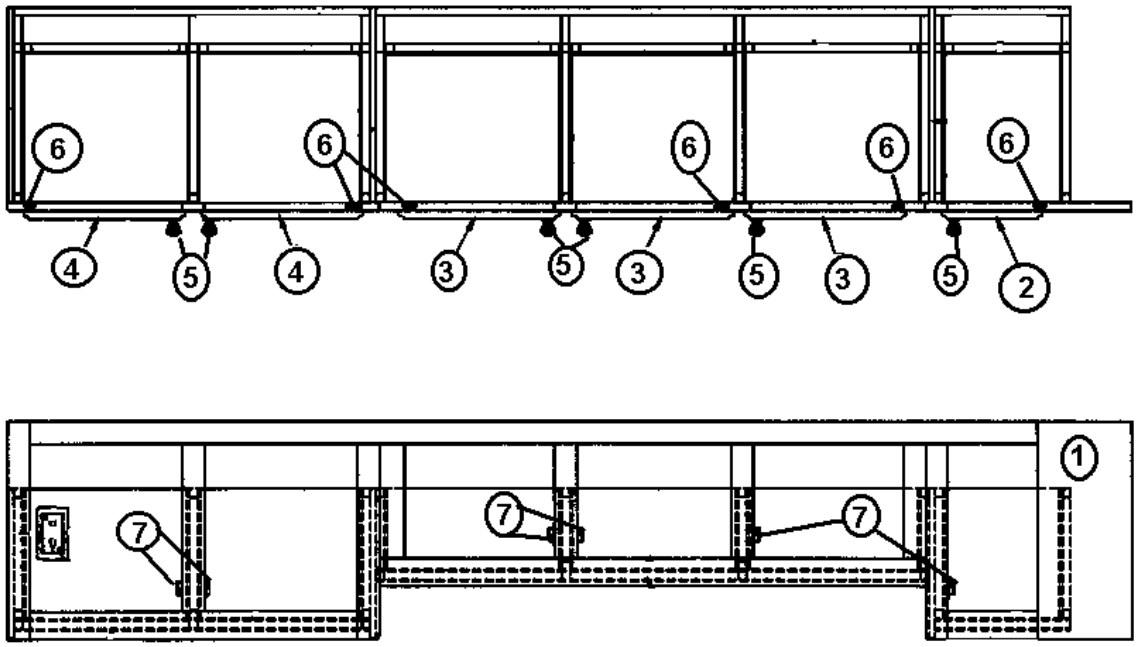

964863-01	Locker Assembly, RS Lounge
1. 964770-003	Face frame, RS lounge, roof locker
2. 801253-013	Door raised panel, 9.00” x 16.25”
3. 801253-023	Door raised panel, 14.50” x 11.25”
4. 801253-033	Door raised panel, 14.50” x 16.25”
5. 381835	HANDLE-CHROME/BRASS
6. 381683	Door hinges
7. 381228-01	Door grabber catch

2005 390/396/Sky Deck XL

FURNITURE, CAB/LOUNGE

Frame, Wainscot, Wall

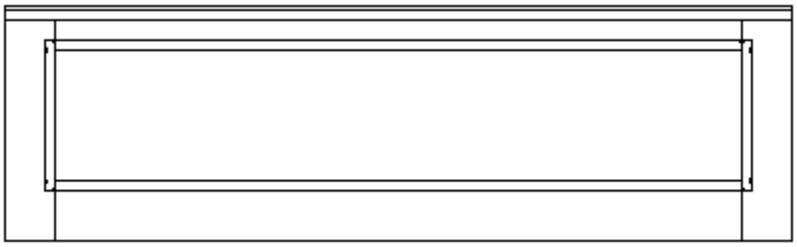

965082-006 FRAME, WAINSCOT LOUNGE WALL, OAK
965082-003 FRAME, WAINSCOT LOUNGE WALL, HICKORY

2005 390/396/Sky Deck XL

FURNITURE, CAB/LOUNGE

End table, 390/396

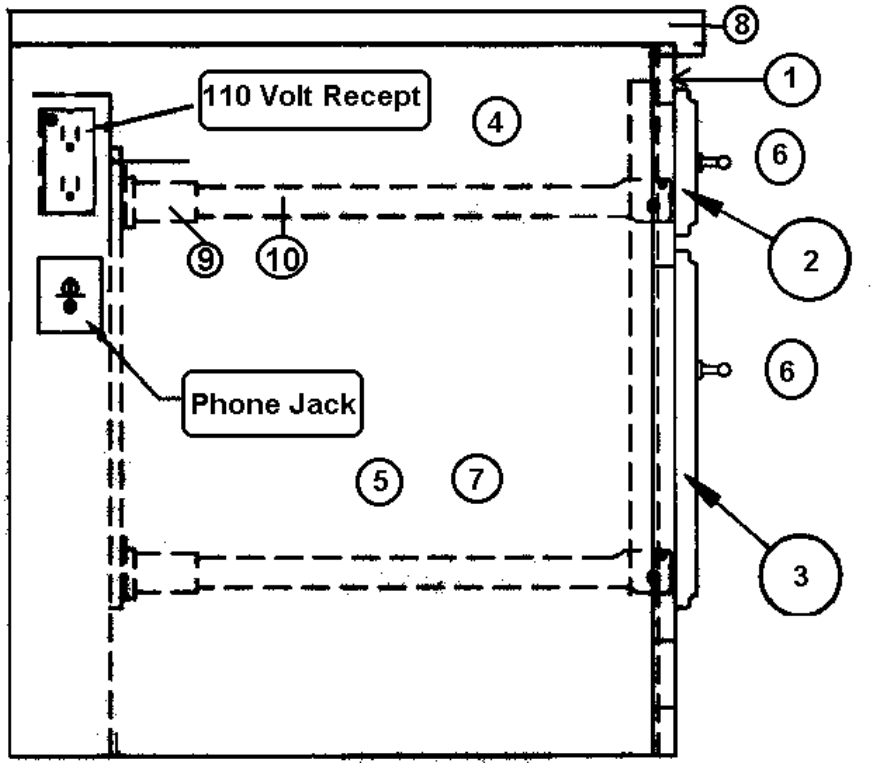

965083-04	End table assembly, 390/396 XL
1. 965084-003	Face frame, End Table
2. 801254-163	Drawer face, 4.75” x 14.25
3. 801254-023	Drawer face, 12.00” x 14.25”
4. 964906-15	Drawer box, 12.25” x 18.00” x 2.75”
5. 964909-03	Drawer box, 12.25” x 18.00” x 10.75”
6. 381835	HANDLE-CHROME/BRASS
7. 114961	Hanger, file folder, Not shown
8. 601924	Top, end table, Corian, Midnight
8. 601924-01	Top, end table, Corian, Sandstone
8. 601924-02	Top, end table, Corian, Everest
9. 381526-03	Drawer slide, 18”
9. 381526-03	Drawer slide, 18”
10. 381526-06	Bracket, adjustable, rear
601903	SHELF ASSY-FLIP, MIDNIGHT
601903-01	SHELF ASSY-FLIP, SANDSTONE
601903-02	SHELF ASSY-FLIP, EVEREST

2005 390/396/Sky Deck XL

FURNITURE, CAB/LOUNGE

Magazine Cabinet, 390/396

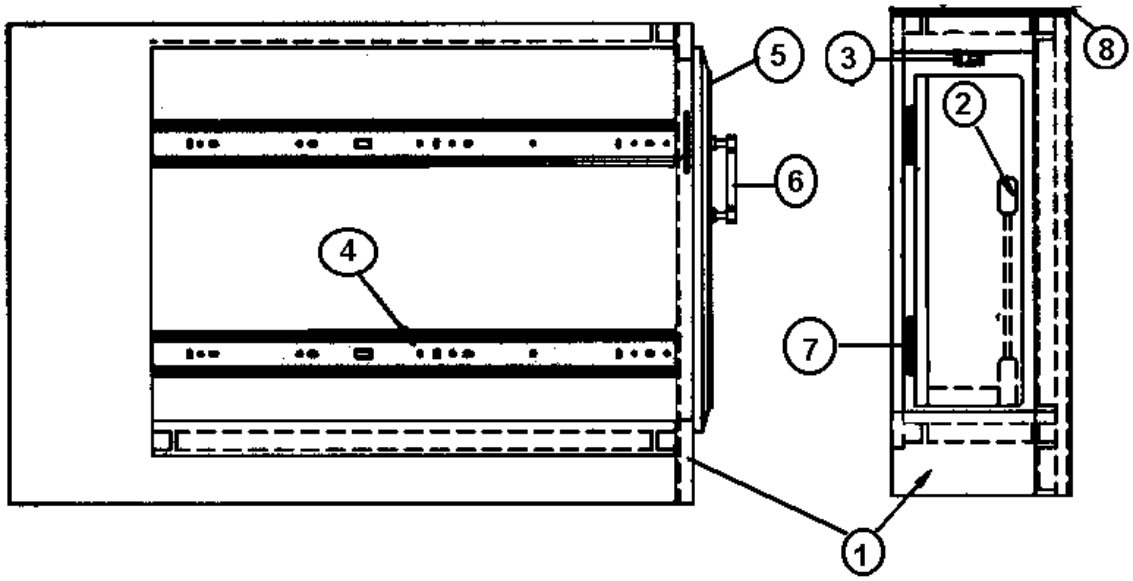

965001-01	Magazine Cabinet Assembly, 390/396
1. 964886-003	Face frame, magazine cabinet
2. 964885-003	Face frame, magazine rack
3. 381228-01	Door grabber catch
4. 381090	Drawer slide, 22”
5. 801254-133	Drawer face, 6.50” x 16”
6. 381835	HANDLE-CHROME/BRASS
7. 381683	Door hinges
8. 601916	Top, magazine rack, Midnight
8. 601916-01	Top, magazine rack, Sandstone
8. 601916-02	Top, magazine rack, Everest
9. 601898	Shelf top, magazine rack, Midnight
9. 601898-01	Shelf top, magazine rack, Sandstone
9. 601898-02	Shelf top, magazine rack, Everest

2005 390/396/Sky Deck XL

FURNITURE, CAB/LOUNGE

Cab Interior Trim

203198-06	Cover “A” pillar, C/S, 390/396
203198-04	Cover “A” pillar, R/S, 390/396
203040-01	Cover, interior, center windshield post
964546-02	Armrest assembly, R/S, 390/396
203194-01	SIDE PANEL CAB LH ABS
964547-02	Armrest assembly, C/S, 390/396
203222-01	PANEL CAB CS 38 X 24 ABS
702192-09	Pocket map
203223	Cup holder, black
201787-01	POCKET DEADBOLT INTERIOR

2005 390/396/Sky Deck XL

FURNITURE, CAB/LOUNGE

Roof Locker, Front Cab, 390 Sky Deck

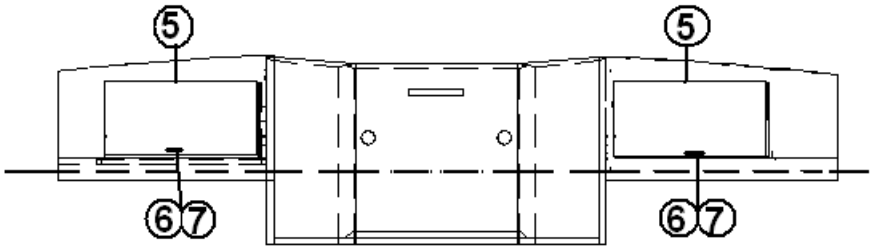

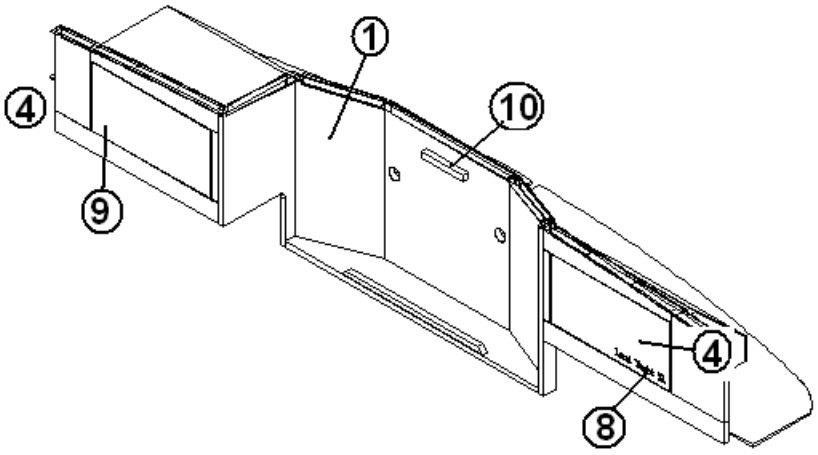

	966144	LOCKER ASSY-FRONT LINER
1.	966143-003	FACE FRAME, OAK
2.	701538-01	CARPET-ECONOLIER
3.	702992	HEADLINER, CEILING
3.	*702992-02	Headliner, Neutral
4.	371375-05	GLASS-3/16"TINTED 8.38" X 16.813”
5.	381654	HINGE-NON BORE GLASS DOOR.BLACK
6.	381653	LATCH-SINGLE TOUCH BLACK
7.	381707	STRIKE W/PULL-GLASS DOOR BLACK
8.	386034	DECAL-AIRSTREAM 7.5"
9.	386033	DECAL-LAND YACHT 7.5"
10.	365013	TAPE CHARCOAL LOW DENSITY FOAM
	964802-006	BLOCK-CORNER RS FRT.R/L, Oak
	964803-006	BLOCK-CORNER CS FRT.R/L, Oak

*Replace 702992 during model year PCN 5130. One roll sent to service 5/11/05

2005 390/396/Sky Deck XL

FURNITURE, CAB/LOUNGE

Cab, Upper Side Panel, Roadside, 390 Sky Deck

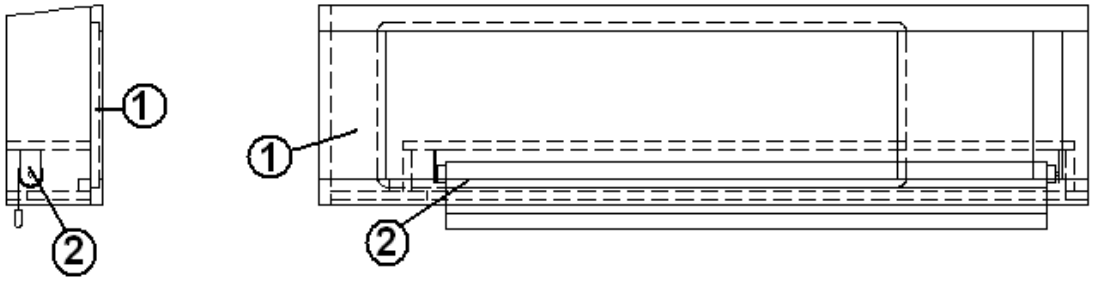

	966142	CAB SIDE PANEL ASSY-RS
1.	966141-006	FACE FRAME-RS SIDE CAB, OAK
2.	702818	SHADE-KOOL SCREEN BLK-35'CUT P
	702988-01	WALL WEAVE 1/8" HYROGLYPHIC RU

2005 390/396/Sky Deck XL

FURNITURE, CAB/LOUNGE

Cab, Upper Side Panel, Curbside, 390 Sky Deck

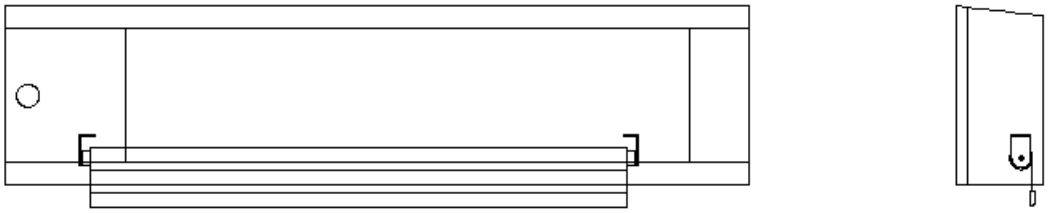

965073-01	CAB SIDE PANEL ASSY. CS
965066-006	FACE FRAME CAB SIDE, RS, OAK
702818	SHADE-KOOL SCREEN BLK-35'CUT P
702988-01	WALL WEAVE 1/8"

2005 390/396/Sky Deck XL

FURNITURE, CAB/LOUNGE

Cab Cabinet Assembly, 390 Sky Deck

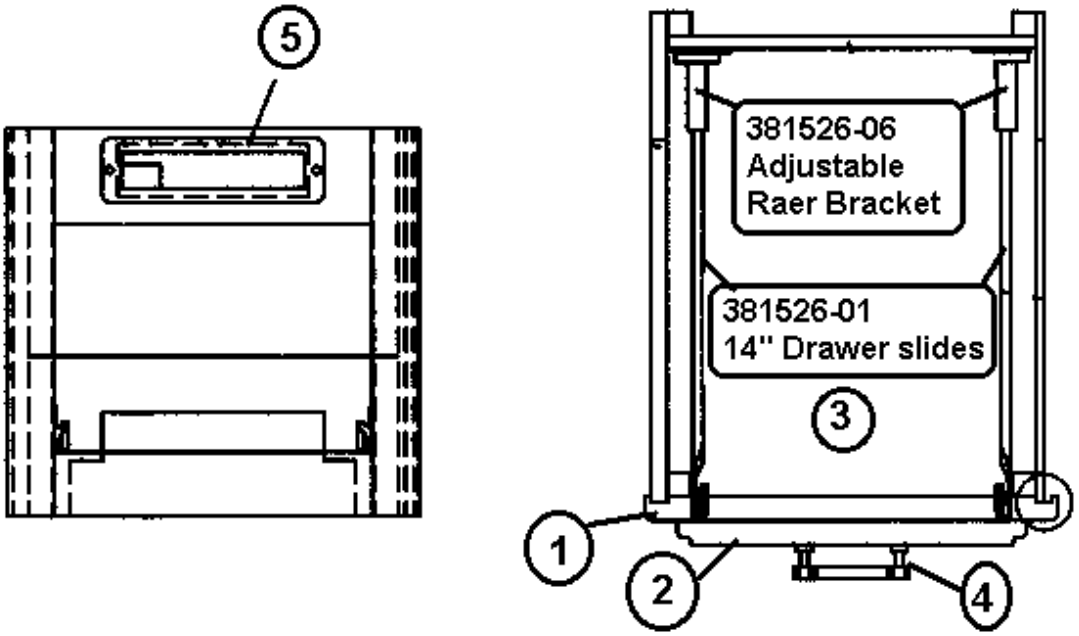

965071-02	Cab Cabinet Assembly390/396 XL
1. 965086-006	Face frame, cab cabinet
2. 801254-076	Drawer face, 8.00” x 10.50”
3. 964907-10	Drawer box, 6.00” x 14.00” x 8.50”
4. 381835	HANDLE-CHROME/BRASS
5. 203234	Pop up cup holder, black

2005 390/396/Sky Deck XL

FURNITURE, CAB/LOUNGE

Roof Locker, Roadside 390 Sky Deck

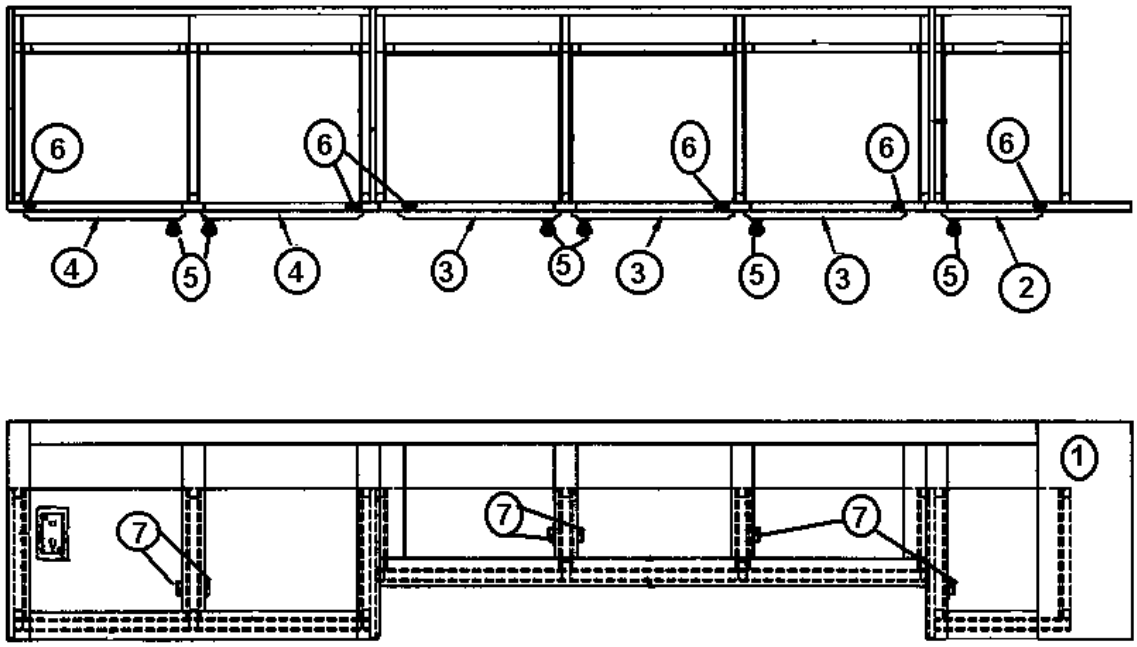

964863-02	Locker Assembly, RS Lounge
1. 964770-003	Face frame, RS lounge, roof locker
2. 801253-013	Door raised panel, 9.00” x 16.25”
3. 801253-023	Door raised panel, 14.50” x 11.25”
4. 801253-033	Door raised panel, 14.50” x 16.25”
5. 381835	HANDLE-CHROME/BRASS
6. 381683	Door hinges
7. 381228-01	Door grabber catch

2005 390/396/Sky Deck XL

FURNITURE, CAB/LOUNGE

Lift Up Table Cabinet 390 Sky Deck

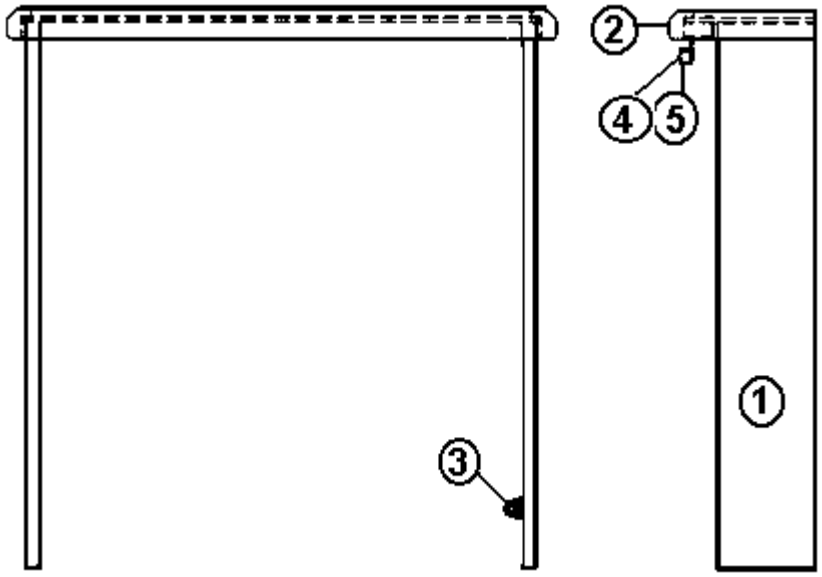

965661-01	Lift Up Table Cabinet Assembly
1. 965662-006	Credenza Leg, Oak
2. 961958	Top assembly
3. 381074	Bulldog catch
4. 380203	Hinge, 1.00” leaf, 24.00 long
5. 101253	Extrusion, table hinge, 24.00” long
964280-006	COUNTERTOP EDGE MOLDING

2005 390/396/Sky Deck XL

FURNITURE, CAB/LOUNGE

Lift Up Table 390 Sky Deck

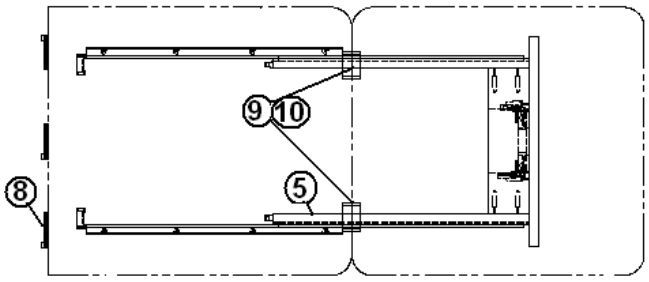

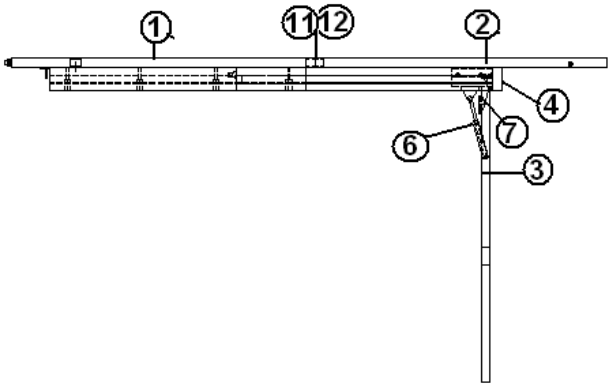

	966126-02	TABLE, LIFT UP 24.00"
1.	960416-02	LEAF, TABLE, LOWER, OAK
2.	960417-02	LEAF, TABLE, UPPER, OAK
3.	962177-036	LEG HARDWOOD 30.50"
4.	960419-016	FACER BOARD, LIFT-UP TABLE, OAK
5.	381306	SLIDES, TABLE, LIFT-UP, RH & LH #20
6.	381147	DOOR SUPPORT - SPRING LOADED
7.	385935-01	HINGE PIVOT ZINC PLATED
8.	201155	SLIDING GUIDE, PLASTIC -TABLE
9.	380040	HINGE SOSS INVISIBLE L & R HAND
10.	345319-08	SCREW, PARTICLE BOARD, #8 X 1.00”
11.	380037	RETAINER SPRING LOCK
12.	380038	EYELET LOCK GS 5 10 BRASS
13.	381074	CATCH BULL DOG #65S (COPPER)
	201155	SLIDING GUIDE,PLASTIC -TABLE
	385935-01	HINGE PIVOT ZINC PLATED
	380203-01	PIANO HINGE 1/8"
	101253	CREDENZA HINGE MOVABLE

2005 390/396/Sky Deck XL

FURNITURE, CAB/LOUNGE

Magazine Cabinet, 390/396

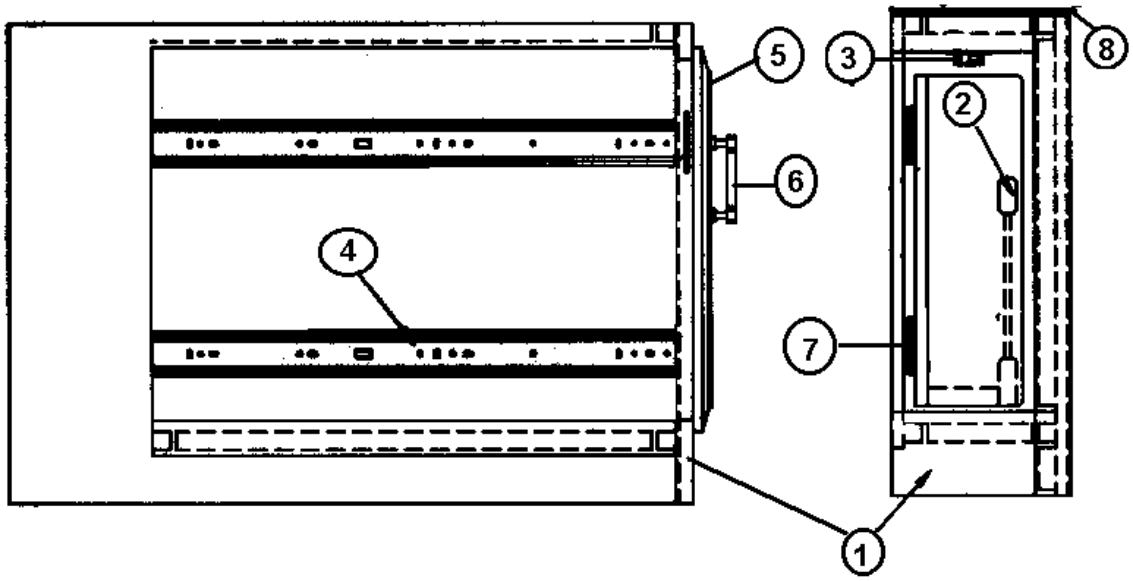

965001-01	Magazine Cabinet Assembly, 390/396
1. 964886-006	Face frame, magazine cabinet
2. 964885-006	Face frame, magazine rack
3. 381228-01	Door grabber catch
4. 381090	Drawer slide, 22”
5. 801254-136	Drawer face, 6.50” x 16”
6. 381835	HANDLE-CHROME/BRASS
7. 381683	Door hinges
8. 965696	Top assembly, magazine rack, Sky Deck
9. 964889-02	Shelf top, magazine rack assembly

2005 390/396/Sky Deck XL

FURNITURE, CAB/LOUNGE

Roof Locker, Curbside, 390 Sky Deck

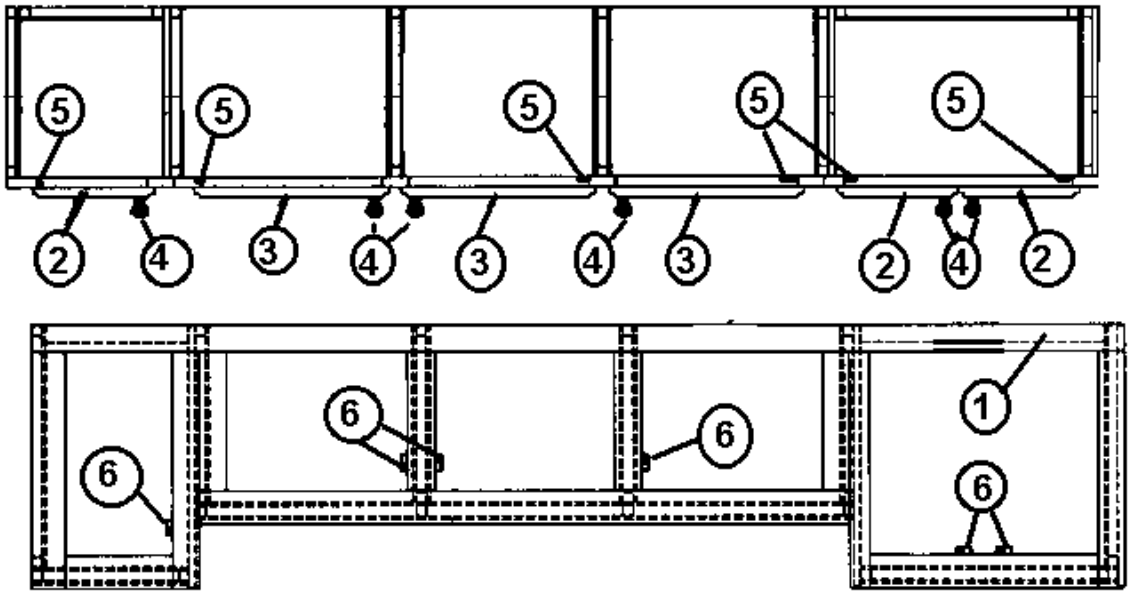

964864-01	Locker Assembly, CS Lounge
1. 964769-006	Face frame, CS lounge, roof locker
2. 801253-016	Door, raised panel, 9.00’ x 16.25”
3. 801253-026	Door, raised panel, 14.5” x 11.25”
4. 381835	HANDLE-CHROME/BRASS
5. 381683	Door hinges
6. 381228-01	Door grabber catch

2005 390/396/Sky Deck XL

FURNITURE, SKY DECK ROOF

Roof Furniture Assemblies

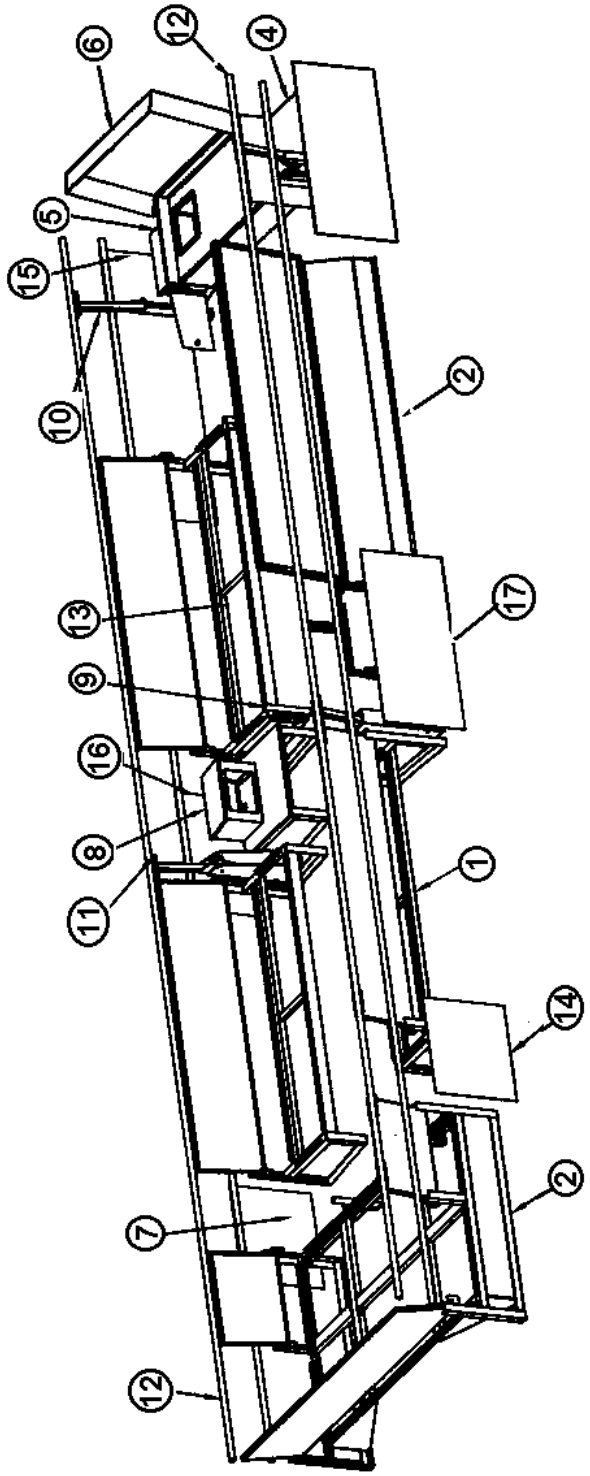

Assembly Numbers on Next Page

2005 390/396/Sky Deck XL

FURNITURE, SKY DECK ROOF

Roof Furniture Assemblies

1.	454058	Assembly, 80 in. sofa
2.	454059	Assembly, sun lounger
3.	454056	Assembly, hatch
4.	454074	Assembly, barbecue table, R.H.
5.	454075	Assembly, barbecue table, L.H.
6.	454060	Assembly, barbecue grill table
7.	454081	Assembly, end table
8.	454087	Assembly, radio table
9.	454063	Umbrella holder
10.	454061	Assembly, stanchion
11.	454093	Assembly, power lift, housing
12.	454062	Safety rail, main
13.	454079	Safety rail, hatch
14.	115104-08	Panel, close out
15.	115104-09	Panel, close out
16.	115104-10	Panel, close out
17.	115104-11	Panel, close out
	381792	Plug, 1.5” Safety Rail end
	381790	Cord elastic, Safety rail
	381784	Ladder, Quick escape, Sky Deck

2005 390/396/Sky Deck XL

FURNITURE, SKY DECK ROOF

Hatch/Safety Rail

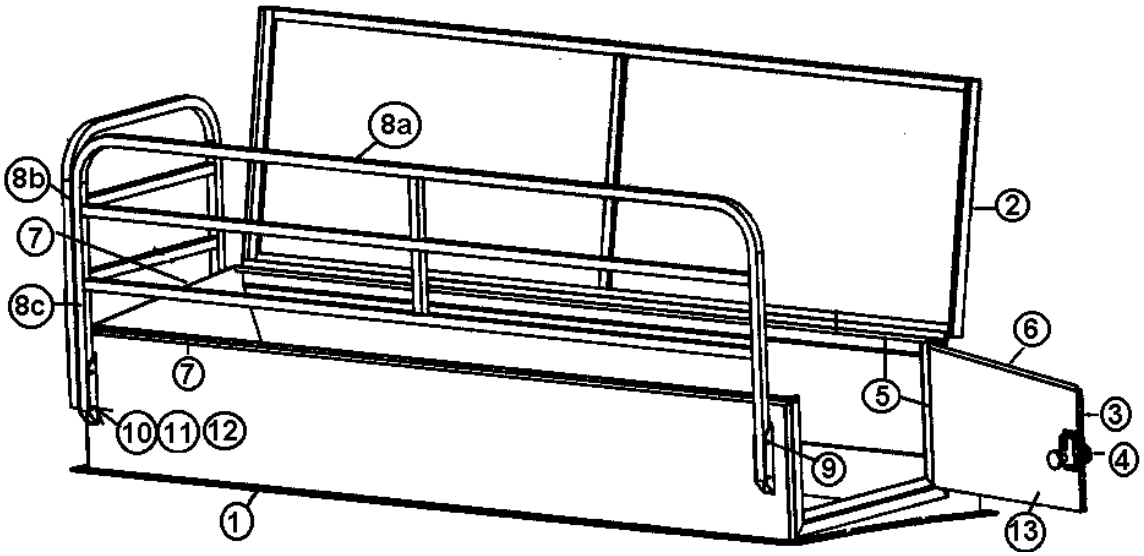

1.	454056-01	Assembly, hatch frame
2.	454056-02	Assembly, hatch lid
3.	454056-03	Assembly, hatch door
4.	381793	Latch, hatch door
5.	380203-01	Aluminum hinge, continuous
6.	381786	Seal, extrusion, hatch door
7.	381785	Bulb seal hatch lid
8a.	454079-01	Safety rail, side
8b.	454079-02	Safety Rail, end
8c.	380774-02	Safety Rail, hinge, .040 x 1 x 14”
9.	385982	Safety locking pin
10.	345366-08	1/4 x 20 x 1.625 bolt
11.	300125	Washer, flat
12.	345377	1/4 x 20, stainless steel Nylock nut
13.	381791	Weather seal, hatch door
	381021	Rubber T-Handle latch
	381789	Knob, chrome
	381569-05	SPRING-17" 30LB
	381673	BRACKET SL 66P3-1
	381672	BRACKET SL 503HP
	381825-01	PULL-HAND WIRE 3.5"
	203080-01	MOLDING 2" X1/4" VINYL TRIM

2005 390/396/Sky Deck XL

FURNITURE, SKY DECK ROOF

Sofa, 80”

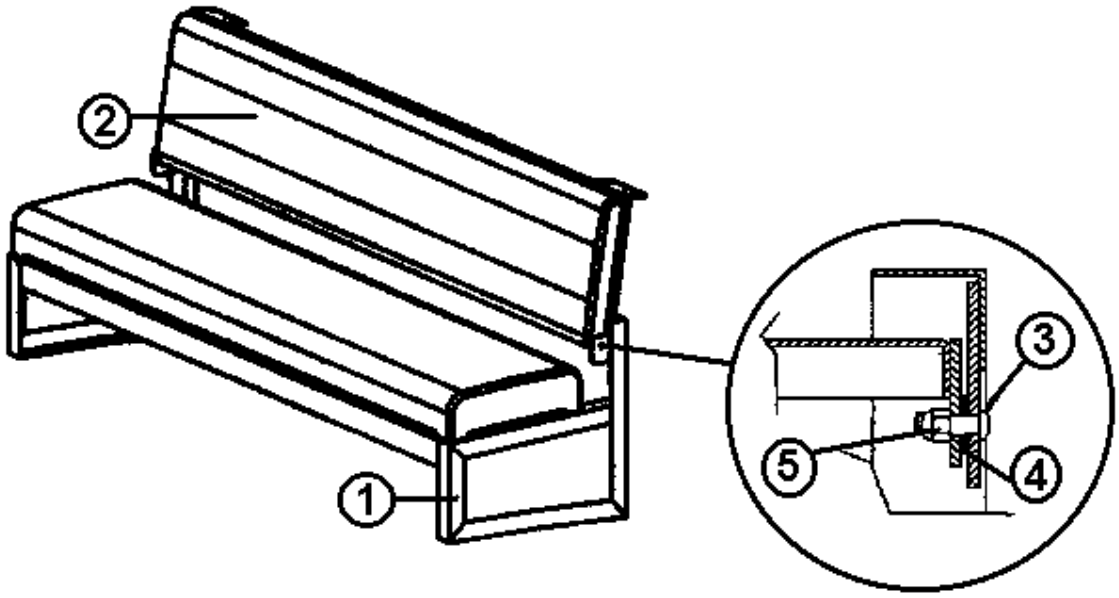

	454058	Sofa Assembly, 80”
1.	454058-01	Sofa frame
2.	454058-02	Sofa lid
3.	345420	3/8” x 1 ¼”, S.S. shoulder bolt
4.	300138	3/8” ID nylon flat washer
5.	345420	3/8” x 1 ¼”, S.S. shoulder bolt

2005 390/396/Sky Deck XL

FURNITURE, SKY DECK ROOF

Sun Lounger

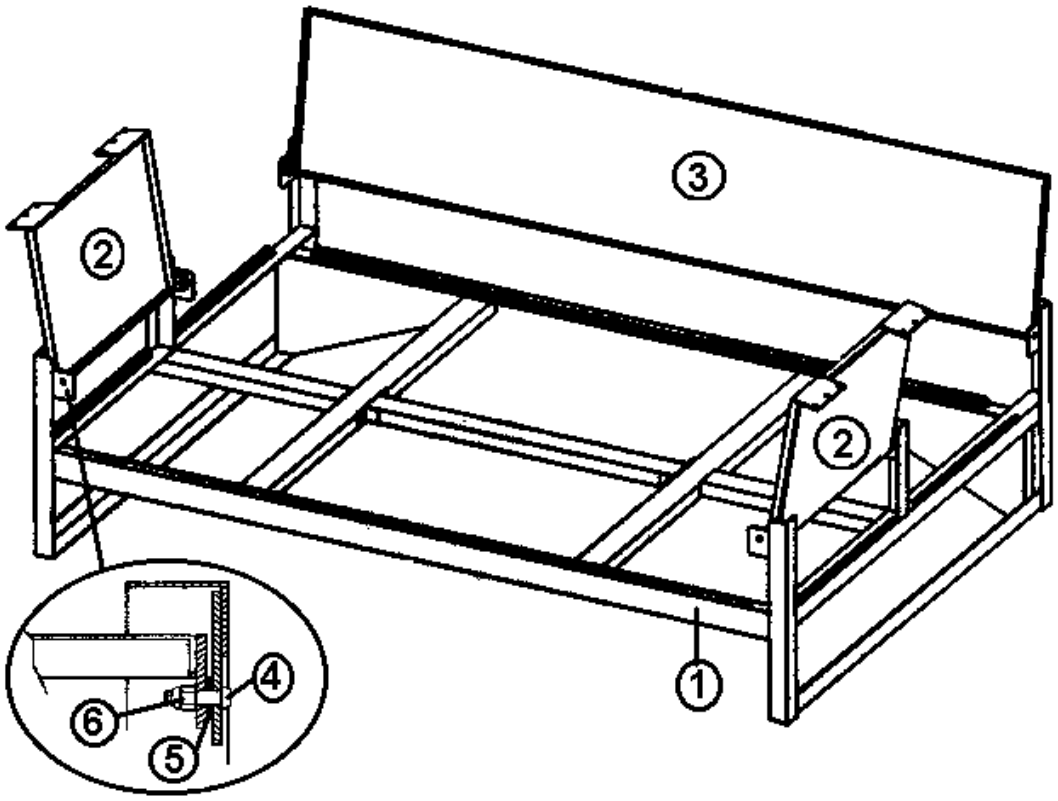

	454059	Sun lounger
1.	454059-01	Frame, Sun Lounger
2.	454059-02	Lid, Sun Lounge, RH-LH
3.	454059-03	Back-Lid, Sun Lounger
4.	345420	3/8” x 1 ¼”, S.S. shoulder bolt
5.	300138	3/8” ID nylon flat washer
6.	350174	5/16” x 18 S.S. Nylox nut

2005 390/396/Sky Deck XL

FURNITURE, SKY DECK ROOF

Grille Table

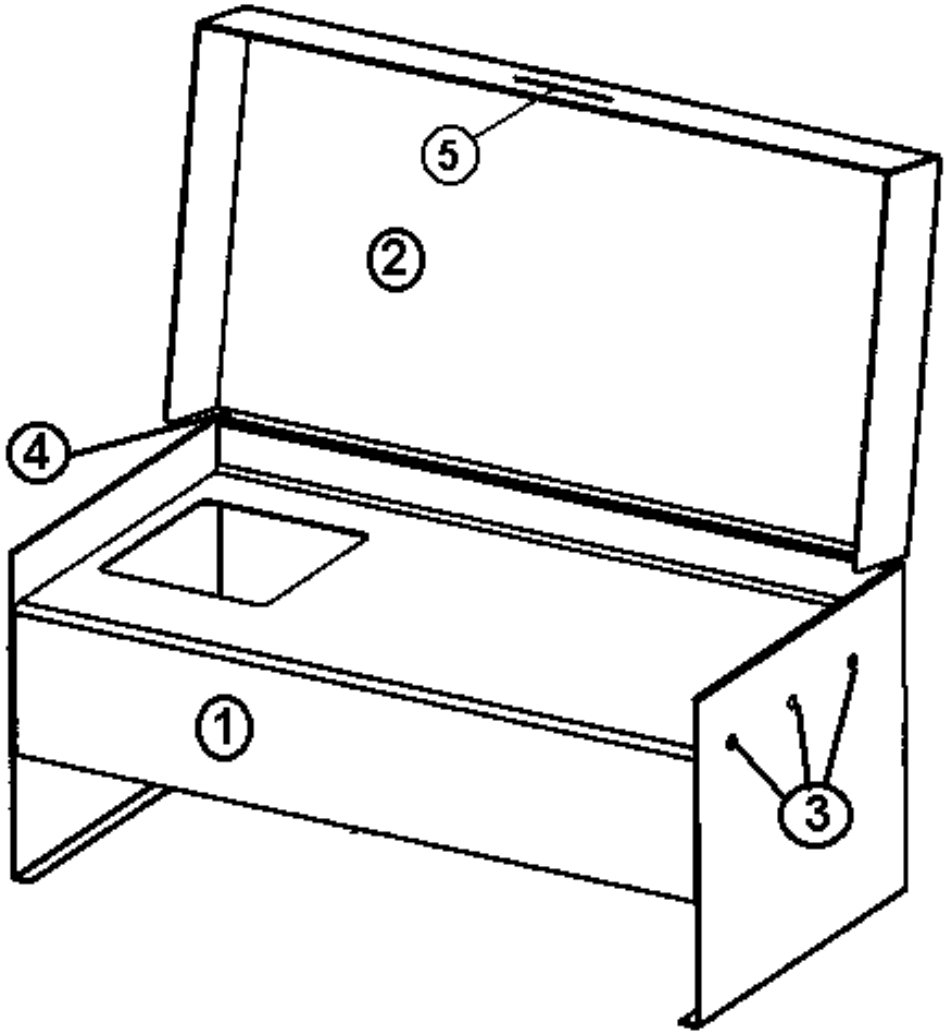

	454060	Assembly, Grille Table
1.	454060-01	Assembly, BBQ frame
2.	454060-02	Assembly, BBQ lid
3.	TBD	Nylon Tree rivets
4.	380203	Hinge, stainless steel, 2” continuous
5.	381783	Handle, chrome, grille

2005 390/396/Sky Deck XL

FURNITURE, SKY DECK ROOF

Safety Rail Stanchion

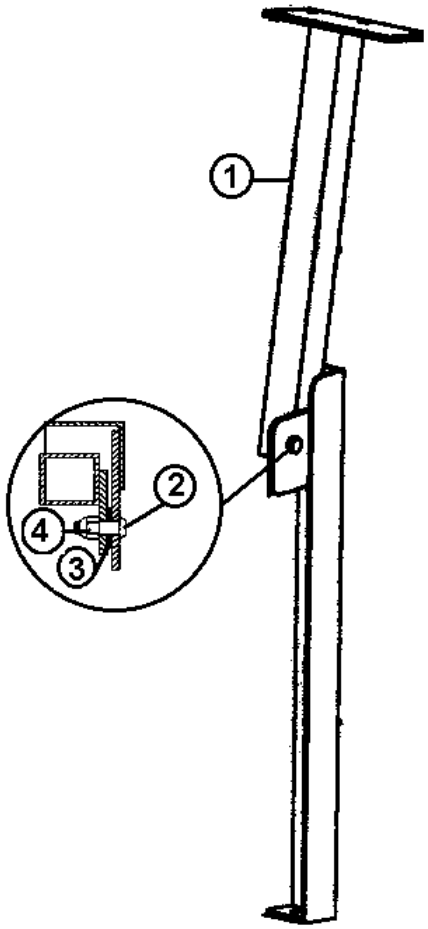

	454061	Safety Rail Stanchion
1.	454061	Safety rail stanchion
2.	345420	3/8” x 1 ¼”, S.S. shoulder bolt
3.	300138	3/8” ID nylon flat washer
4.	350174	5/16” x 18 S.S. Nylox nut

2005 390/396/Sky Deck XL

FURNITURE, SKY DECK ROOF

Umbrella/Umbrella Holder

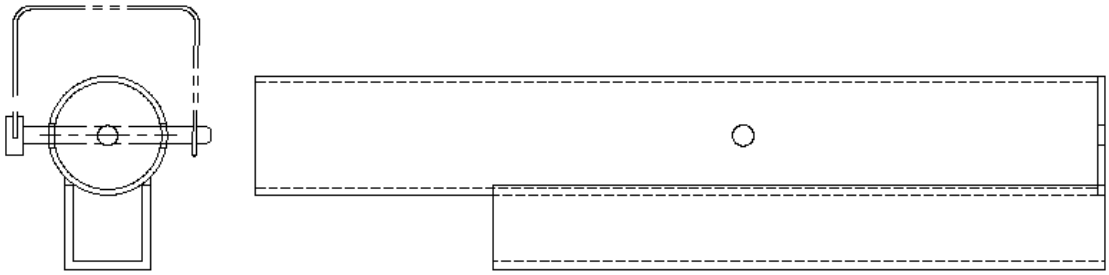

454063	HOLDER-UMBRELLA
703262	UMBRELLA

2005 390/396/Sky Deck XL

FURNITURE, SKY DECK ROOF

End Table

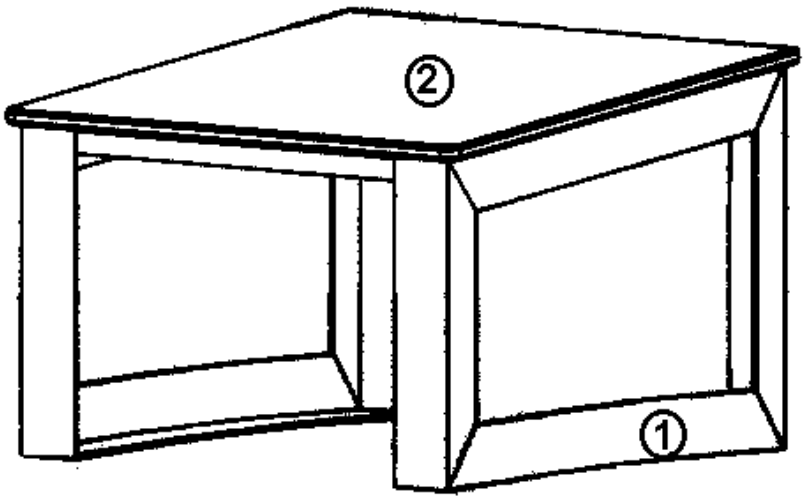

454081	Assembly, End Table
1. 454081-01	Frame, end table
2. 454081-02	Top, end table

2005 390/396/Sky Deck XL

FURNITURE, SKY DECK ROOF

Safety Rail Power Lift Assembly

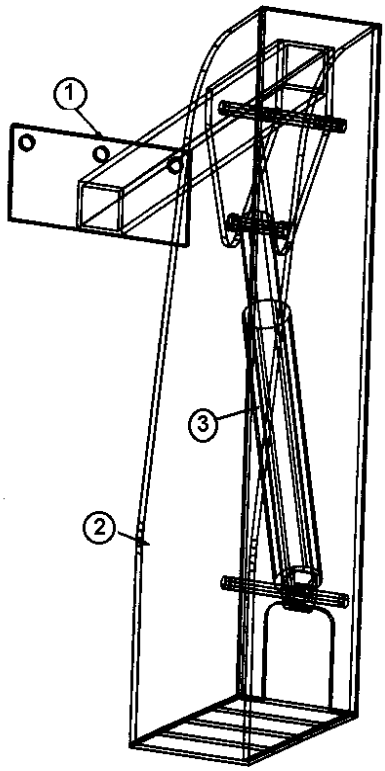

1.	454091	Safety Rail Power Lift Assembly
2.	454092	Power lift pivot arm
3.	454093	Power lift housing
	511734	Power lift motor
	345424	CLEVIS PIN-3/8"HEADLESS S.S.
	345423	BOLT-SHOULDER .375"X 2.0" S.S.
	381821-01	BUSHING-NYLON .468"
	203354	BUSHING STOCK .625"OD X 60" WH
	381821-06	BUSHING-NYLON 1.875"
	381821-05	BUSHING-NYLON 1.75"
	381821-03	BUSHING-NYLON 1.35"
	381821-04	BUSHING-NYLON 1.4"
	381821-02	BUSHING-NYLON .531"
	350177	COTTER PIN-S.S.HAIRPIN
	350176	WASHER-.390 ID SS
	350174	NUT-NYLOK SS 5/16-18

2005 390/396/Sky Deck XL

FURNITURE, SKY DECK ROOF

Sofa, Cushions

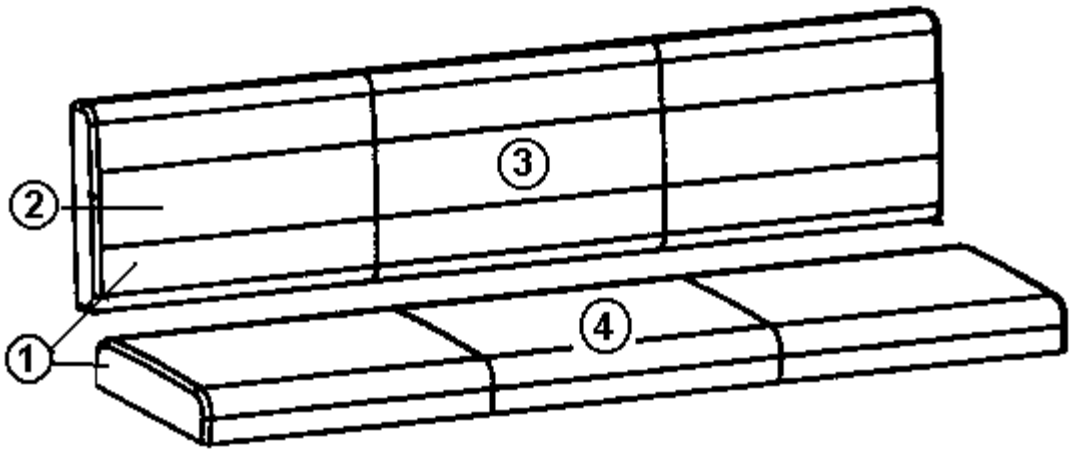

1.	801426	Marine fabric, Gray Dawn
2.	801427	Marine fabric, Blue Berry
3.	965710-01	Cushion assembly, seat
4.	965710-02	Cushion assembly, backrest
	700617	Velcro, hook, seat cushion fastener
	700617	Velcro, loop, seat cushion fastener

2005 390/396/Sky Deck XL

FURNITURE, SKY DECK ROOF

Sun Lounger Cushions

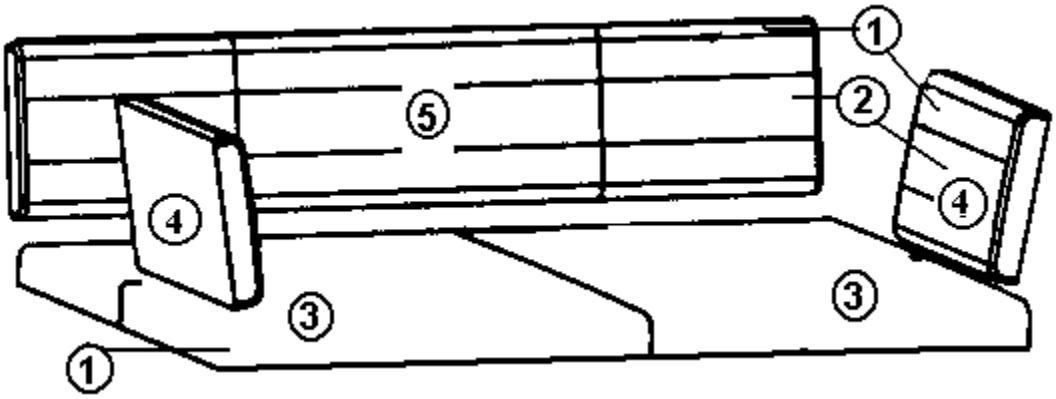

	965712	Cushions, Sun Lounger, Sky deck
1.	801426	Marine fabric, Gray Dawn
2.	801427	Marine fabric, Blue Berry
3.	801430-09	Cushion assembly, LH/RH seat (2)
4.	801430-06	Cushion assembly, backrest sides
5.	801430-05	Cushion assembly, backrest
	700617	Velcro, hook, seat cushion fastener
	700617	Velcro, loop, seat cushion fastener

2005 390/396/Sky Deck XL

FURNITURE, SKY DECK ROOF

BBQ Table

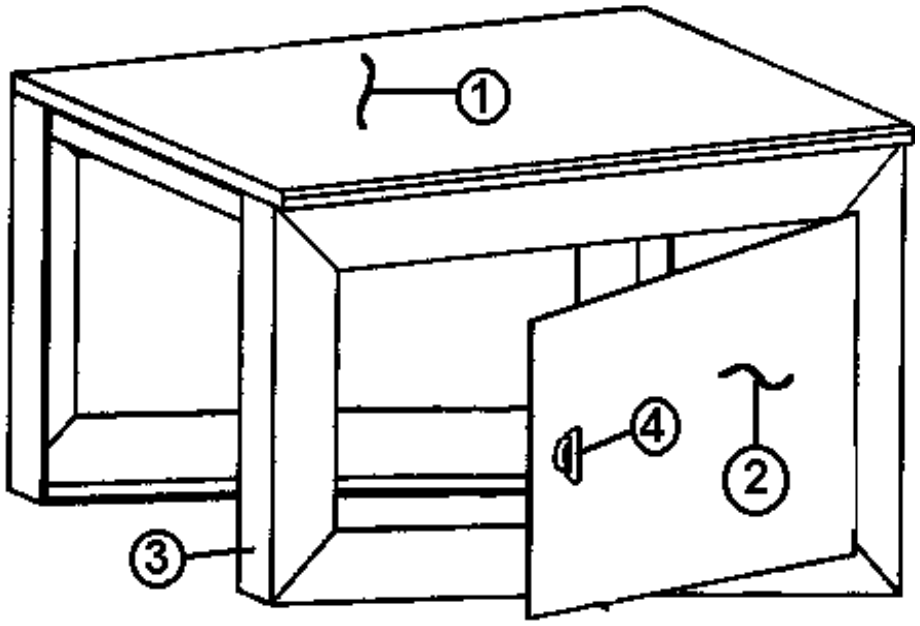

	454074	Assembly, BBQ Table-RH, Shown
	454075	Assembly, BBQ Table-LH, Mirror Image
1.	454074-01	Table top, RH
1.	454075-01	Table top, LH
2.	454074-02	Door
3.	454074-03	Frame assembly
4.	381809	Door latch cam
5.	380203-01	Hinge, 2” piano

2005 390/396/Sky Deck XL

FURNITURE, SKY DECK ROOF

Radio Table

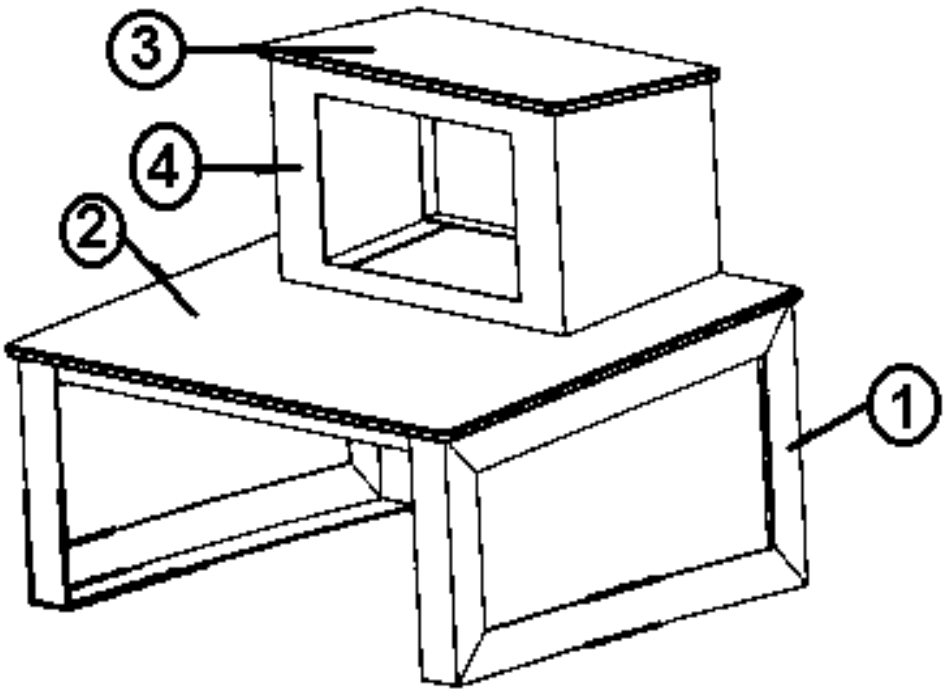

	454087	Assembly, Radio Table
1.	454087-01	Assembly, radio table frame
2.	454087-02	Lower top
3.	454077-03	Upper top
4.	454077-01	Assembly, radio box

2005 390/396/Sky Deck XL

HARDWARE

Main Door Lock

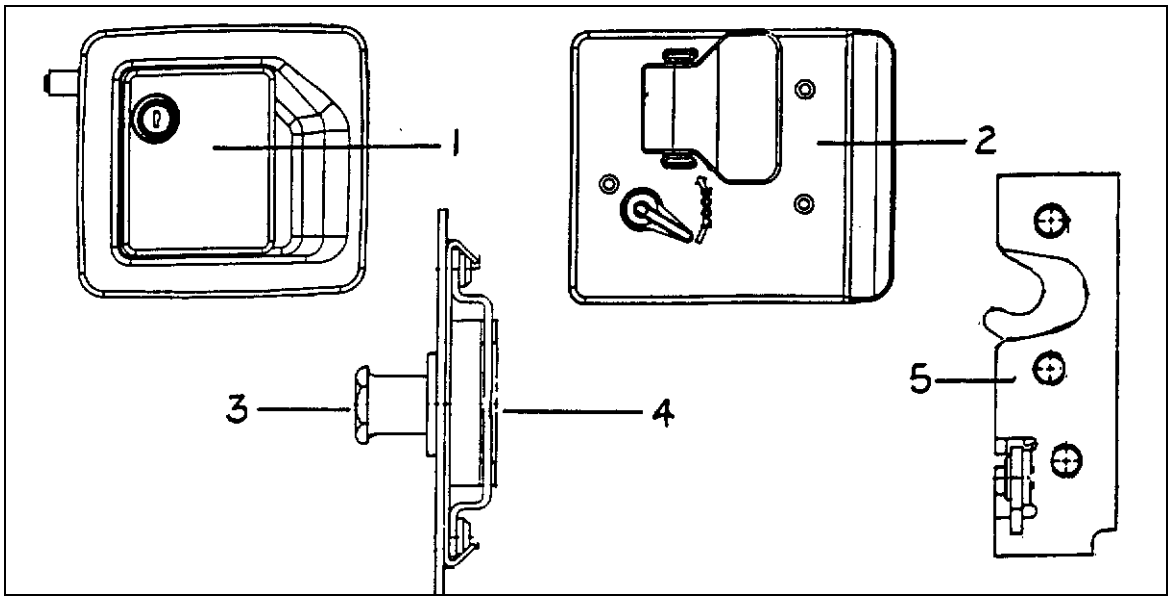

1. 381521-01	outside lock housing
2. 381521-02	inside lock plate
3. 381284	Striker bolt
4. 381521-04	Caged nut
5. 381521-03	Rotary latch
381521-05	Screws, inside lock plate

Main Door Dead Bolt

510802-01	Actuator, door lock, 5-wire
381323-01	Dead bolt assembly
452030	Bolt, Tri-mark dead bolt
381326	Striker, 10007 w/Tri-mark dead bolt
345321-12	Screw, #8-32,flat head, black
200772	Pan, plastic, dead bolt, interior

2005 390/396/Sky Deck XL

HARDWARE

Main/Screen Door Handles/Latches

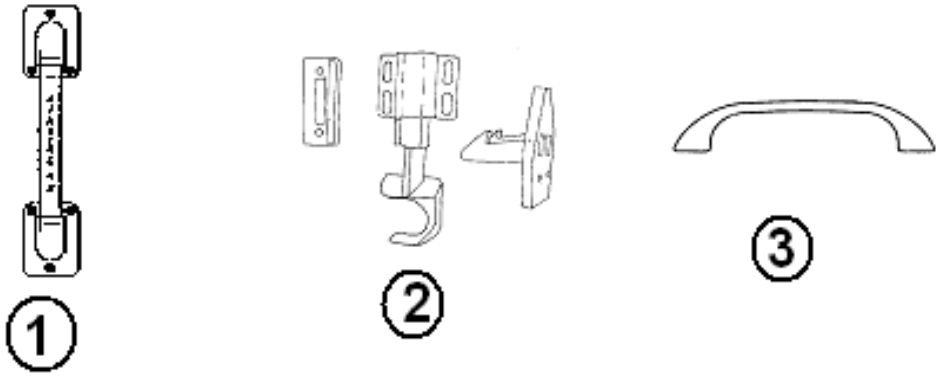

1. 381859 Main door Grab handle “AIRSTREAM”
2. 381454 Latch, screen door
3. 380004 Handle, Screen

2005 390/396/Sky Deck XL

HARDWARE

Main/Screen Door Hinges/Closeouts

960699	Hinge assembly, main entrance door
381334	Hinge leaf, jamb, main door
381336	Hinge leaf, door, main
381377	Hinge leaf, screen door
385599-075	Bearing, sleeve, main door hinge
300118-01	Washer, nylon, main door hinge
310024	Hinge pin,.250 x 6.0”
203002	Cover, inner door lock
203000	Close-out, screen door, plastic slide

Window, Se-Gi

371366-100	Weep hole cover, SE-GI window
371366-101	Sweep latch, SE-GI window

Door, Generator Access

381702-03	Latch, double rotary, LH, straight panel
381702-02	Latch, double rotary, RH, straight panel
381702-01	Handle, paddle, non-lock

Door Prop, Compartment

381569-01	Prop, gas spring, 50#
381659-02	Bracket, 16”, prop
381659-03	Clip, 16”, prop

2005 390/396/Sky Deck XL

HARDWARE

Door, Compartment, Props/Latches

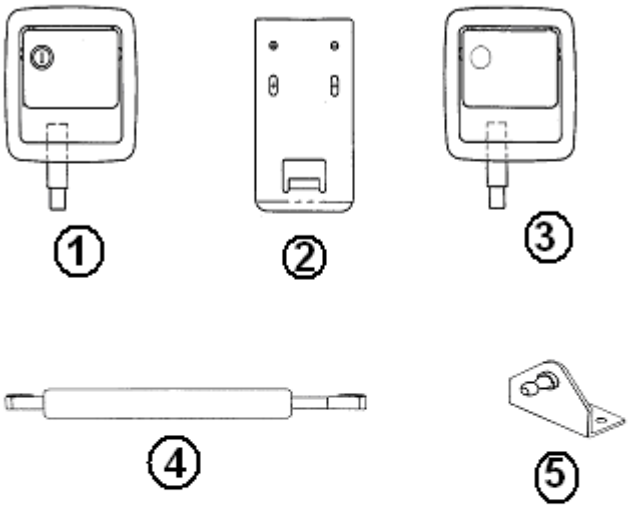

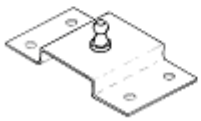

1. 381888-01 Latch, lower compartment, Locking
2. 453707 Strike plate, compartment latch
3. 381888-02 Latch, lower, compartment, non-locking
4. 381569-01 Prop, gas spring, 50#
381569-03 Prop, gas spring, 40#
381569-04 Prop, gas spring, 20#
381569-05 Prop, gas spring, 30 #
5. 381672 Prop Bracket w/ball, tall
6. 381673 Prop bracket ,raised
381262 Bracket, prop w/ball angled
381637-03 Plate, latch back
381888-04 Key, baggage door TM 500
381637-05 Latch mtg. Brkt., lower compartment

2005 390/396/Sky Deck XL

HARDWARE

Compartment Door

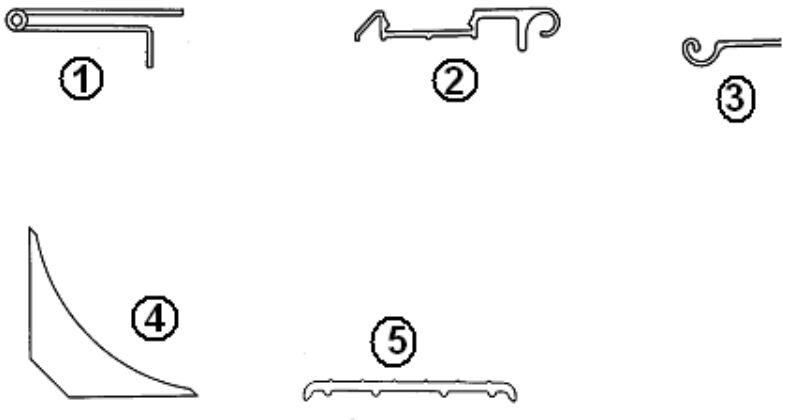

1. 381650 Hinge, lower (Used on short doors below slide outs)
2. 114864 Hinge, lower compartment, body side
3. 114863 Hinge, lower door side
4. 203184 Corner trim Lower compartment Black plastic
5. 114869 Extrusion, threshold lower compartment

381662 S-HOOK STD
381661 CHAIN, SASH
114822 DRIP COMPARTMENT DOOR

Slide Out Tray/Power Cord Retractor

381674	Slide 42”, slide out tray
381674-01	Trim, “U” channel, 48”, for slide
511496	Retractor, power cord
203228	Tub, power cord storage

Door, Front Fender

203218	DOOR, FRONT FENDER ACCESS
381672	BRACKET SL 503HP
381673	BRACKET SL 66P3-1
380203-01	PIANO HINGE 1/8" PIN CLEAR ANODIZED

2005 390/396/Sky Deck XL

HARDWARE

Slide Out Mechanism, Electronics kit

510113	Electronics kit
510116	Control limiter
520316	Switch bezel assembly

Slide Out Mechanism, cross shaft kit LPSO

530072	Cross shaft kit LPSO
15-1006	Lock nut, ¼ x 20
15-1091	Screw, HHC ¼ x 20, 1.75 GR5
16-1037	Flat washer
520044	Drive shaft, short 55”/60”

Slide Out Mechanism, Beam kit, Lo Profile II

531058	Beam kit, Lo Profile II
15-1348	Nut, ¾-10 UNC, spin-lock
530037	Stud plate, room mounting
5301-125	Shim low, pro slide 1/8”
531002	Beam assembly, master
531019	Beam assembly, follower

Mirrors, Exterior Chrome/Heated

511511	Mirror, exterior, chrome, pair, -01 RS, -02 CS
511511-01	Mirror, exterior, chrome, Roadside
511511-02	Mirror, exterior, chrome, Curbside

2005 390/396/Sky Deck XL

HARDWARE

Slide Out Mechanism, Galley

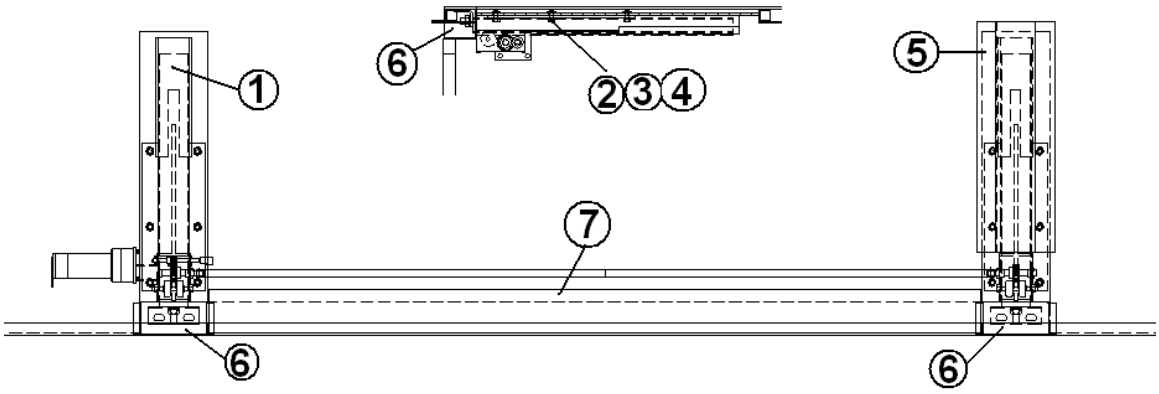

1.	410826	SLIDE-OUT SYS.POWER GEAR
2.	345269-05	BOLT- 1/2-13 HEX HD GR.5
3.	300112-50	WASHER FLAT, ½”
4.	300072-08	LOCK WASHER
5.	453695	HAT SECT-CLOSE OUT
6.	453703	CLOSE OUT
7.	452276	STEEL 20 GA GALVANIZED
	381623	Roller, floor slide out
	381709	Bar, travel lock, 18.50”, Wardrobe
	381623	Roller, floor slide out
	114970	TRIM SLIDE-OUT LOWER
	381730	FELT PAD, SELF ADHESIVE 1.5"DIA.
	340093-06	CLIP, "J" VINYL COATED, 3/4" ID

2005 390/396/Sky Deck XL

HARDWARE

Slide Out Mounting, Wardrobe

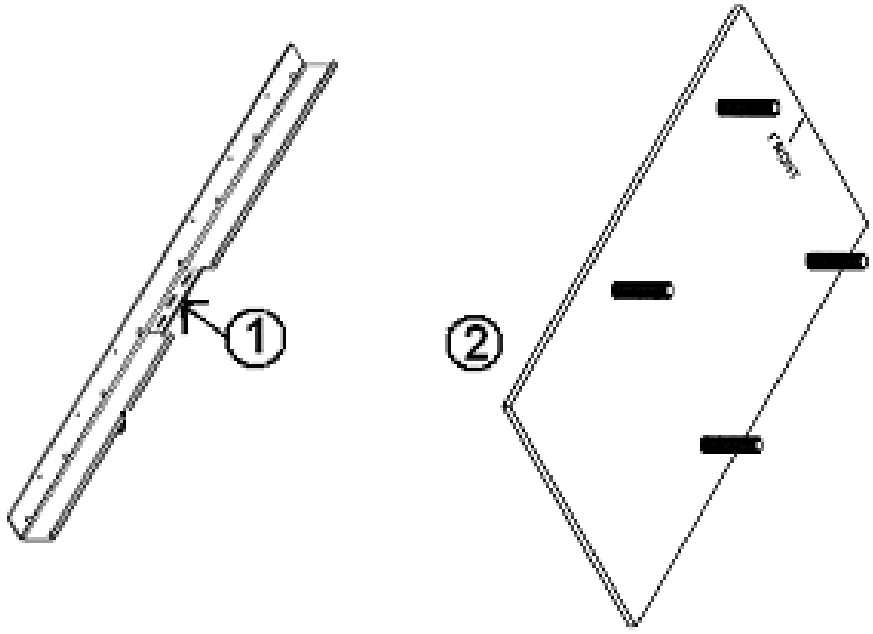

1.	965299	Wardrobe Mounting. Angle
2.	453905	WDRB slide-out motor mounting plate
	381623	Roller, floor slide out
	381709	Bar, travel lock, 18.50”, Wardrobe
	381623	Roller, floor slide out
	114970	TRIM SLIDE-OUT LOWER
	965074	BOOT, SLIDE OUT SHAFT
	381730	FELT PAD, SELF ADHESIVE 1.5"DIA.
	340093-06	CLIP, "J" VINYL COATED, 3/4" ID
	203376	DISK-ACRYLIC 1/4"X 2.00" DIA

2005 390/396/Sky Deck XL

HARDWARE

Slide Out Mechanism, Wardrobe

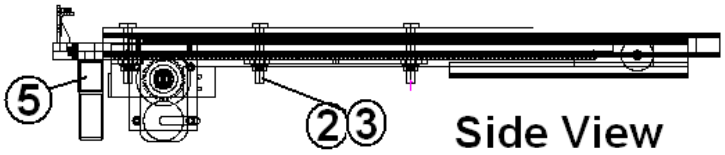

Side View

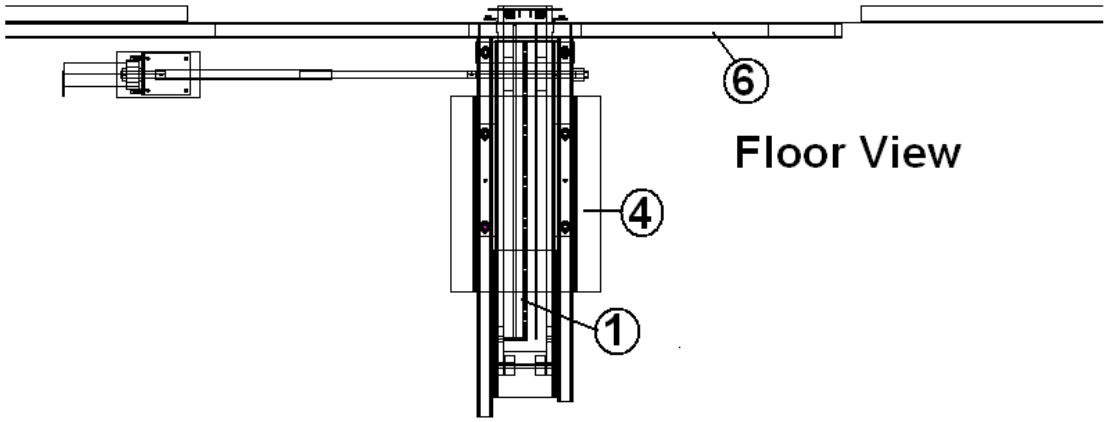

Floor View

1. 400952 Slide out system, Power Gear, Wardrobe
2. 345405 BOLT 1/2-13 X 3.5"CARRIAGE bolt
3. 350132 NUT, FLANGED MAC-LOCK ½" X 13
4. 453938 CLOSE-OUT, WARDROBE SLIDE MECH
5. 453937 CLOSE-OUT, SLIDE MECHanism
6. 452276 STEEL 20 GA GALVANIZED

2005 390/396/Sky Deck XL

HARDWARE

Interior Cabinet

1

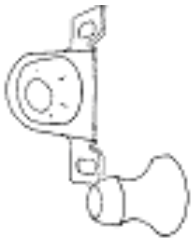

2

3

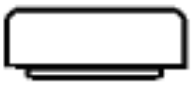

4

5

6

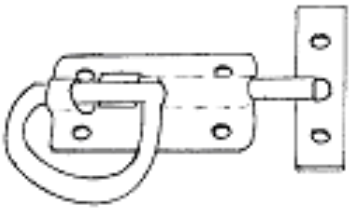

7

8

2005 390/396/Sky Deck XL

HARDWARE

Interior Cabinet

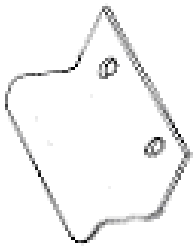

9

10

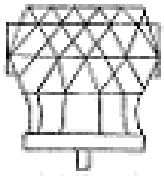

11

12

13

14

2005 390/396/Sky Deck XL

HARDWARE

Interior Cabinet

1. 381684	Latch, lever handle, bath door
2. 381074	Bull dog, door catch
3. 381228	Grabber door, latch w/catch, 10lb.rating
3. 381228-01	Grabber door, latch w/catch 3 lb. Rating
4. 800405-006	Plug, hardwood, Oak
4. 800405-003	plug, hardwood, Hickory
5. 381835	Door handle, Brass/Chrome
6. 381839	Knob, door,
7. 381805	Slide bolt latch
8. 381754	Clip, mirror, retainer, metal
9. 385940	Mirror pull, brass
10. 381352	Pull, flush mount, brass
11. 381726	Knob, door, Satin/Chrome
12. 381724	Elbow catch, Solid brass
13. 360016	Bump-on, rubber, Main door
14. 381688	Bumper on, Clear
14. 381081-01	Snap cap for Philip head screw, white
15. 381610-03	Cover cap, for screw, European pine
381443-02	Stop, bumper, medicine cabinet
200980-01	Silverware tray

Bi-Fold Door

381675	HARDWARE BI-FOLD BATH DOOR
381724	ELBOW CATCH-BRASS SPRING LOADED
381352	PULL, FLUSH,POLISHED BRASS,L/Y
381740	CAP-DOOR BI FOLD

2005 390/396/Sky Deck XL

HARDWARE

Fire/Extinguisher/Emergency Triangle

600162-01	Fire extinguisher
380188	Emergency warning triangle, set of 3

Shower Door

381691	POCKET DOOR PASSAGE LOCK
381690	BOLT-FLUSH LEVER 12"

2005 390/396/Sky Deck XL

HARDWARE

Interior/Latches/Handles

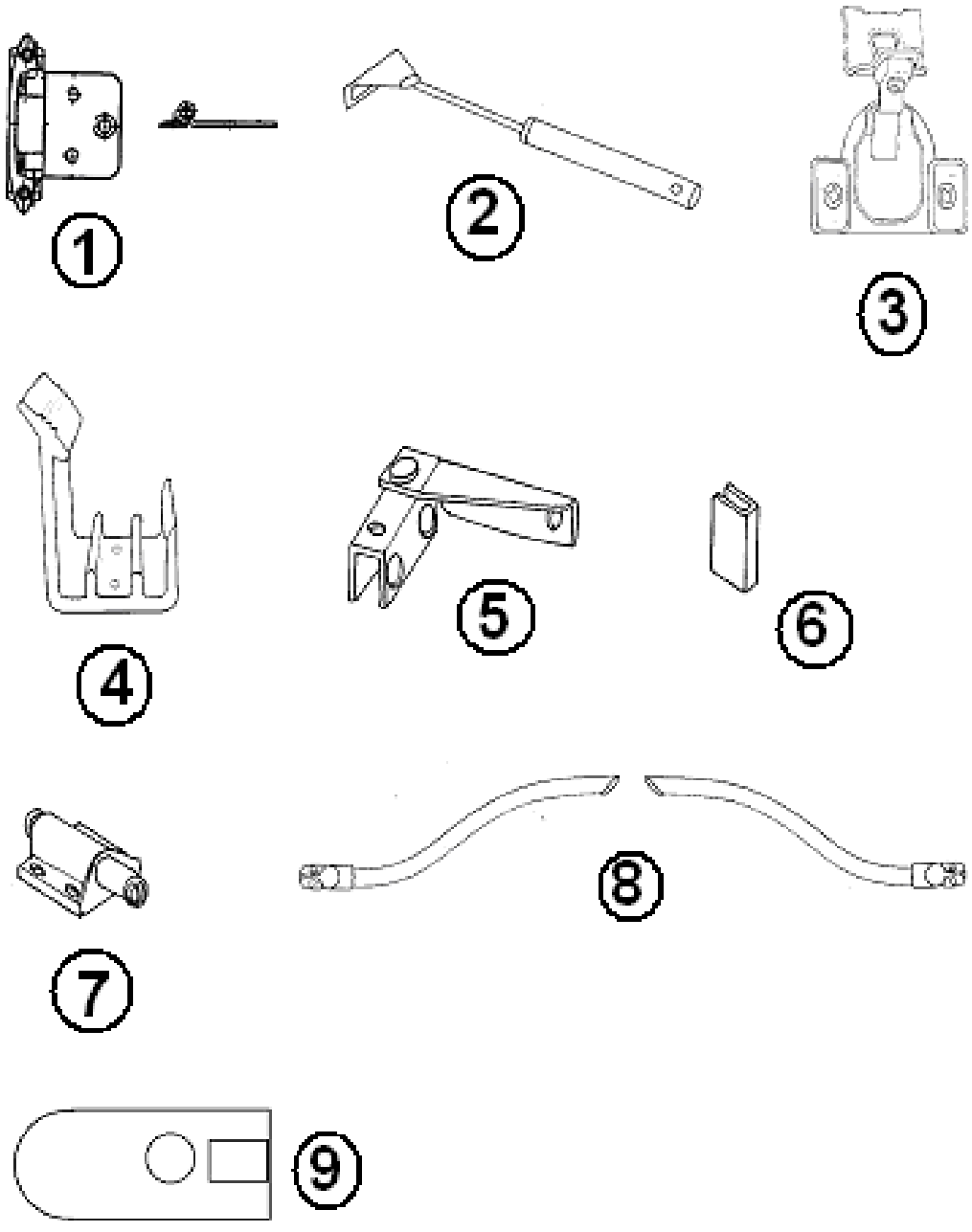

2005 390/396/Sky Deck XL

HARDWARE

Interior/Latches/Handles

1. 381836	Hinge, Bright Brass
2. 381147	Door support, spring loaded
3. 381683	Hinge, Euro, style hidden
4. 381643-01	Travel latch, rear wardrobe, sliding doors
5. 381654	Hinge, non bore, glass door, black
6. 381707	Strike, glass door, black
7. 381653	Latch, single, touch, black
8. 381736-01	Handle, exit, interior, wall, 32.50”
8. 381736-02	Handle, exit, interior, dash, 20.50”
9. 381735	LATCH-ENGINE COVER LID- NON LOCK
9. 381735-01	FLANGE, FOR GASKET, ENGINE COVER
381527	Shelf strips, Speedy, wardrobe shelves

2005 390/396/Sky Deck XL

HARDWARE

Drawer Slides

381526-01	Drawer slide, 950RV, 14
381526-03	Drawer slide, 950RV, 18”
381526-05	Drawer slide, 700 series, 22”
381526-06	Rear bracket, adjustable, drawer slide
381090	Drawer slide, 22”, magazine rack

Wardrobe Clothes Rod

380045	Clothes rod
200975-04	Conduit, flexible, black plastic (covers rod)
380046	Clothes rod mounting bracket
381298	“J” bracket, center clothes rod support

Bath Accessories, 390/396

381679	Towel bar, brass
381255	Soap holder, brass
381275	Toilet paper holder, brass w/hood
381254	Holder, toothbrush and tumbler, brass
381680	Robe hook, brass
381695	Towel ring, brass

Bath Accessories, 390 Sky Deck

381626-02	TOWEL BAR 18" CHROME & BRASS
601358	SHOWER HARDWARE UNIT, CHROME
380248	HOLDER SOAP
380034	TOILET PAPER HOLDER, CHROME
380017	HOLDER TUMBLER & TOOTHBRUSH

2005 390/396/Sky Deck XL

HARDWARE

Rear Bed Prop

381549	Gas spring prop, rear bed
381262	Bracket, prop, w/ball, angle
381263	Bracket, prop, w/ball, straight

TV Cabinet, Rear Bedroom

381569-04	Gas spring, 20#, TV cabinet
381262	Bracket, prop, w/ball, angle
114960	Bracket, TV roller support
381443-05	Carrier, rear TV
115139-01	BRACKET-RH TV MOUNT BEDROOM
115139-02	BRACKET-LH TV MOUNT BEDROOM

Galley Scissor Tray, Windshield Squeegee

381685	Hinge, scissor tray, sink
381313	Squeegee w/telescoping handle

Galley Flip Shelf

601903	SHELF ASSY-FLIP, MIDNIGHT
601903-01	SHELF ASSY-FLIP, SANDSTONE
601903-02	SHELF ASSY-FLIP, EVEREST
381614	FOLDING SHELF BRACKET

Floor Safe

381760	Floor safe
965388	Safe stand assembly

2005 390/396/Sky Deck XL

HARDWARE

Label and Tags

385531	FMVSS certification label
385815	Name plate, motorhome hitch rating
385095	Tag registry #11999
385465	Label, exit warning (English)
386122	Label, warning label/cooking appliance
386121	Label, LP gas warning label (odor)
385788	Warning label, pilot light/refuel
385101	Tag, auxiliary tank dump valve handle
385099	Tag, black tank dump valve handle
385063	Label, drain cap
385062	Decal, 110-125 voltage AC
385309	Decal, fuel fill
386118	LP gas warning/fill label
385141	Tag, seat, clear w/black letters
385518	Label, dimension and clearance
385193	Label, 12Volt distribution inside
385560	Air conditioner rating label
385561	Generator rating label
385565	Label, holding tank flushing
385805-01	A/C priority switch label-front
385805-02	A/C priority switch label-rear
385812	Label, Calif. hazardous substance
386120	Label, smoke detector
385612	Label, parking brake warning
385620	Label, unleaded fuel only
385829	Decal, fuse and relay
385828	Decal, fuse panel warning
385851	Label, cellular phone
386096	Label, warning (roof), SLIPPERY WHEN WET

(continued)

2005 390/396/Sky Deck XL

HARDWARE

Label and Tags

385933	Label, name set relay
385941	Label, waste water holding
385942	Label, sewage holding tank
385943	Label, ”cap must be in place”
385947	Label, 10amp fuse maximum
385098	Label, seat occupancy
386012	Label, warning, water heater
385931-01	Decal sheet, utility compartment
385946	Label, warning, slide out operation
385966	Label, inverter circuit
386038	Label, CSA holding tanks fresh water
386057	Label, washer/dryer vent
381741	KEY FOB INSTRUCTIONAL PLAQUE
386019	LABEL 1 AMP FUSE MAX.
385800	LABEL, HOT WATER DISPENSER
385835	LABEL CARBURETOR WARNING
386039	LABEL AIRSTREAM ALIGNMENT
385608	LABEL, SEWER HOSE
386040	LABEL AIRSTREAM FLEXIBLE
386059	DEL, ENGINE BLOCK HEATER SWITCH
386061	LABEL, REMOVE PANEL FOR ACCESSORY
386082	LABEL THOR 5.25" X .75”
386095	Label, Towing warning
385984	LABEL SET, COAX CABLE
386101	LABEL SLEEPING ACCOMMODATION
386110	LABEL-OK TO SHIP
386115	LABEL-CAUTION STAIRWAY
386116	LABEL-CAUTION UMBRELLA
386117	LABEL-WARNING CAPACITY, SKY DECK
386113	LABEL-RVIA GOLD
386119	LABEL "DO NOT STORE COMBUSTIBLE”
386124	LABEL REFUELING WARNING
386123	LABEL "POTABLE WATER ONLY"

Label and Tags, CSA

385949	"POTABLE WATER" CSA
385950	LABEL "SMOKE DETECTOR CSA
385951	LABEL "RANGE FRESH AIR" CSA
385952	LABEL "LP WARNING" CSA
385953	LABEL "IF YOU SMELL GAS" CSA
385954	LABEL "RANGE WARNING" CSA
386120	LABEL SMOKE ALARM WARNING
386118	LABEL LP GAS TRI-WARNING
386121	LABEL "IF YOU SMELL GAS"
386122	LABEL "COMFORT HEATING”
385466	LABEL, EXIT LABEL (FRENCH)
385098-CSA	LABEL-SEAT OCCUPANCY FRENC

2005 390/396/Sky Deck XL

PLUMBING, LPG

LPG Tank/Hoses

601736	LP tank, 181# w/sender
511229	Sending unit, 90 ohm, Snap-on
601674	Regulator, LP gas, 2-stage
203135	Cover, for 2-stage regulator
452546	Bracket, LP regulator mounting
201649	Access cover LP regulator
601527-02	LP hose, high pressure, 51”
601673-01	LP hose, low pressure, 3/8 x 48”
601732	LP hose, tank to regulator, 36”
601412-08	Connector, 1/2 pipe to 3/8 flare
601412-12	Connector, 1/2 pipe to 5/8 flare
600003	Tee, 5/8 x 3/8 x 3/8 brass, flare
601280	Elbow, brass, 90degree 1/4MPT x 1/4FPT
601515	Coupler, brass 1/4 x 1/4 inverted flare
601661	Coupler, 1/2”MPT, brass
914336	TANK SUPPORTS

LPG Line Fittings

600004	Tubing, copper, 5/8in.
600008	Tubing, copper, 3/8in.
600001	Flare nuts, forged, 5/8in.
600435	Flare nuts, forged, 3/8
601408	½” 90 DEGREE ELBOW
601409	½” TEES
601407-23	PIPE STEEL ½”, BLACK, 23.00"
601407-29	PIPE STEEL ½” BLACK, 102.25
601407-25	PIPE STEEL ½” I.D. BLACK, 36.5
601407-37	PIPE-STEEL, ½”, BLACK, 45”
601407-38	PIPE STL ½”, BLACK 21
601411	1 ½” MALE ADAPTOR
600238	3/8” FLARE UNION
601675	UNION 3/8” M FL X 3/8” M NPT #1517

2005 390/396/Sky Deck XL

PLUMBING, FRESH WATER

Tank/Pump/Fittings

601864-02	TANK-FRESH WATER 54.5 GALLON
114517	STRAP FRESH WATER TANK
601239-01	Hose, 1.375I.D.water tank fill
601791-03	Water pump, Aquatec
943576	HOSE-WATER PUMP
601791-02	FITTINGS-SLIP IN (AQUATEC PUMP)
601392-04	City water hook-up w/regulator
601733	Hose, 36” vinyl riser (used on galley slide out)
690423	Faucet, washer/dryer
601738	Box, valve control, washer/dryer
601658	VALVE 1/2" STOP CPVC

2005 390/396/Sky Deck XL

PLUMBING, FRESH WATER

Fresh Water Fittings

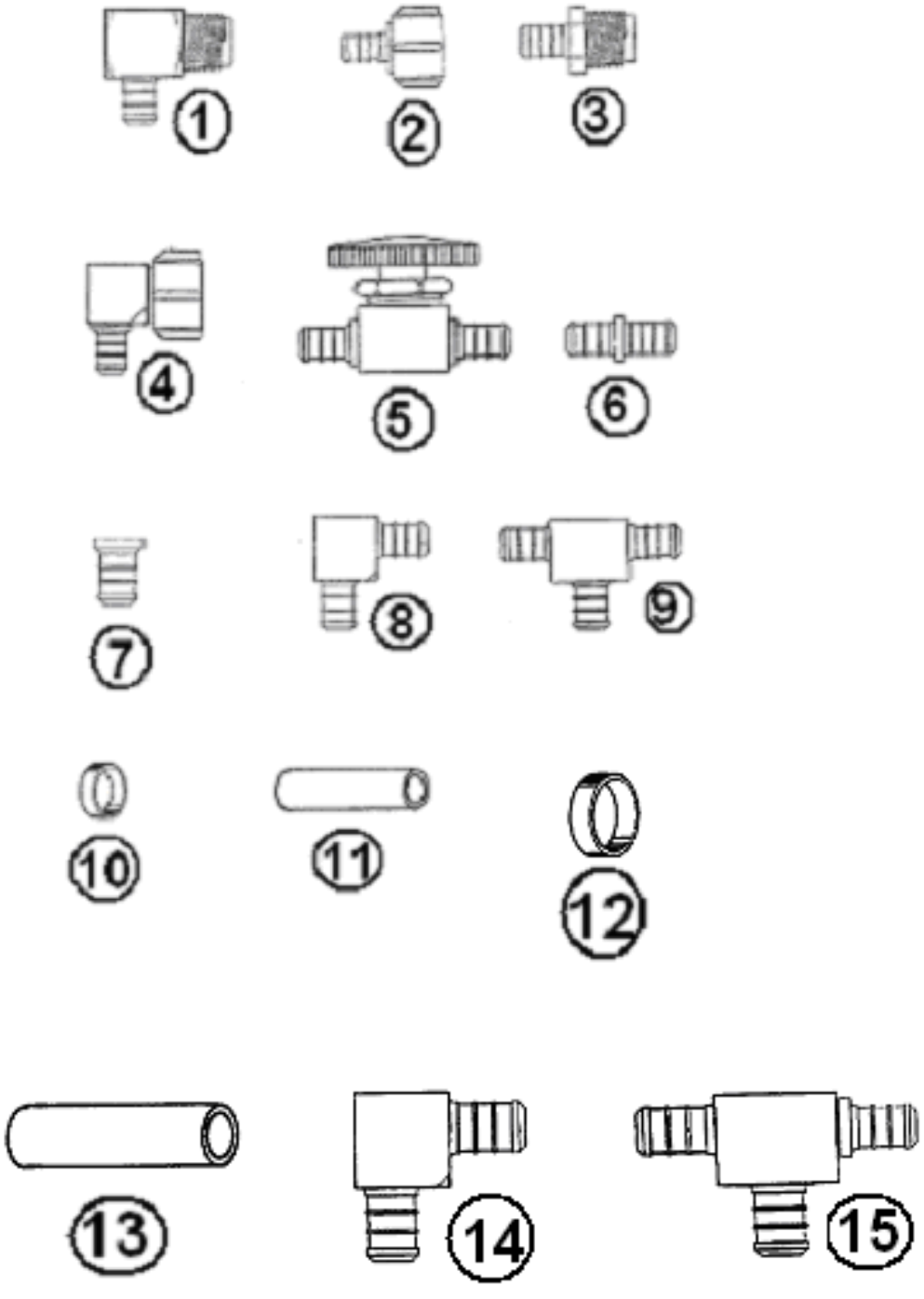

Part Numbers on the Next Page

2005 390/396/Sky Deck XL

PLUMBING, FRESH WATER

Fresh Water Fittings

1.	601698-04	Elbow, ½" barb x ½" MPT
2.	601698-03	Coupler, ½" barb x ½" FPT
3.	601698-02	Coupler, ½" barb x ½" MPT
4.	601698-05	Elbow ½ barb x½" FPT
5.	601698-22	Shut-off, ½" barb x ½" barb
6.	601698-08	Coupler, ½" x ½" barb
7.	601698-09	Plug, ½" barb
8.	601698-10	Elbow ½" barb x ½" barb
9.	601698-11	Tee, ½" x ½" x ½"
10.	601698-15	Crimp ring, ½E-Pex, ½" (black)
11.	601698-01	E-Pex tube, ½"
12.	601698-16	Crimp ring, ¾, E-Pex, black
13.	601698-12	E-Pex tube, ¾"
14.	601698-13	Elbow, ¾" x ¾" barb
15.	601698-18	Tee, ¾" x ½" x ¾" barb
15.	601698-20	Tee, ¾" x ¾" x ½" barb
	601698-14	3/4 BARB X 3/4 MPT EL
	601698-07	QV477X 1/2 BARB RB SHUTOFF VALVE
	601698-20	TEE ¾" X ¾" X ½"

2005 390/396/Sky Deck XL

PLUMBING, FRESH WATER

Faucet, Galley, 390/396

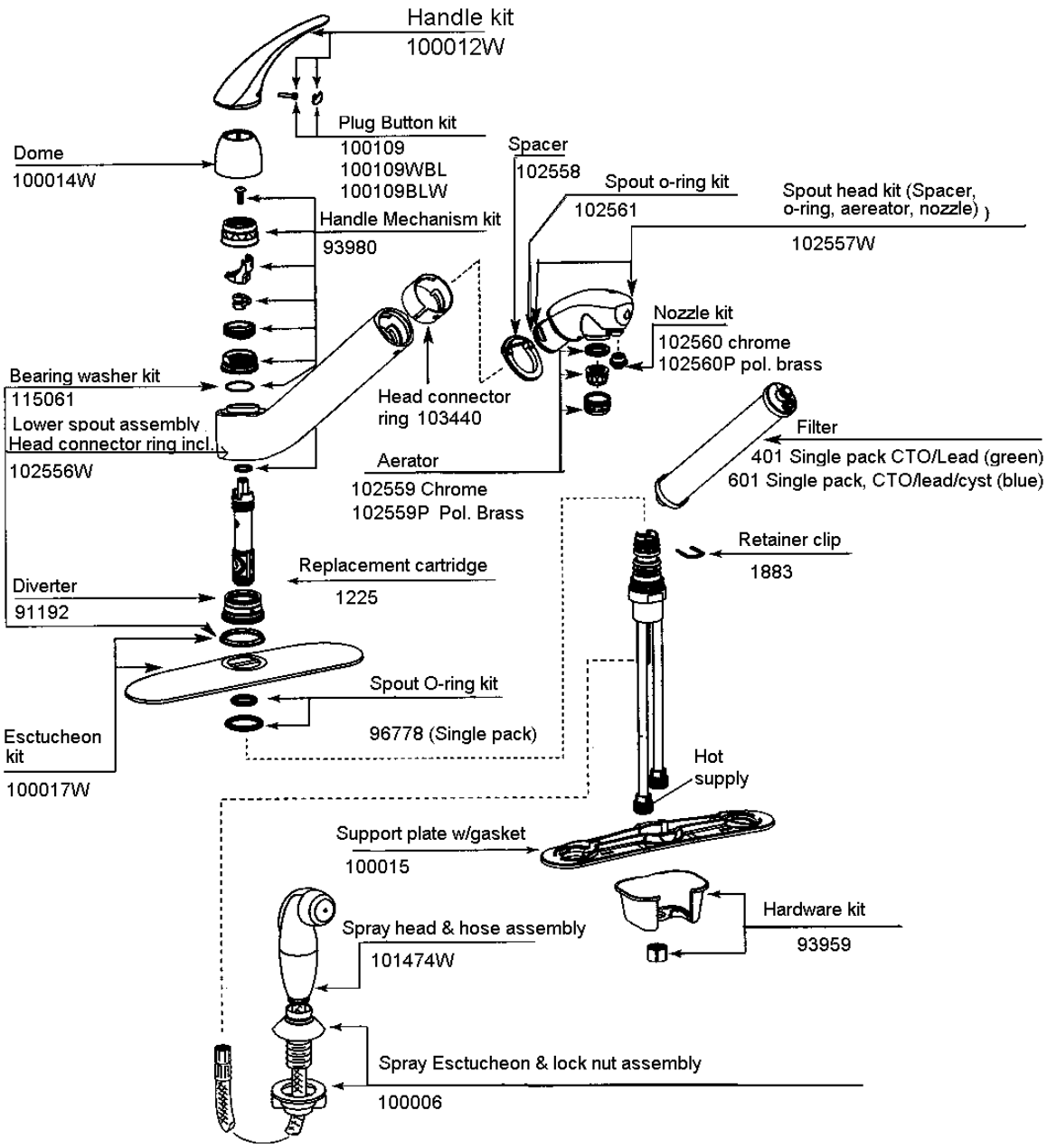

601828 MDL 7050W, Glacier, Moen Pure Touch
601827-01 Moen Pure Touch Faucet, Chrome

2005 390/396/Sky Deck XL

PLUMBING, FRESH WATER

Faucet, Lavatory 390/396

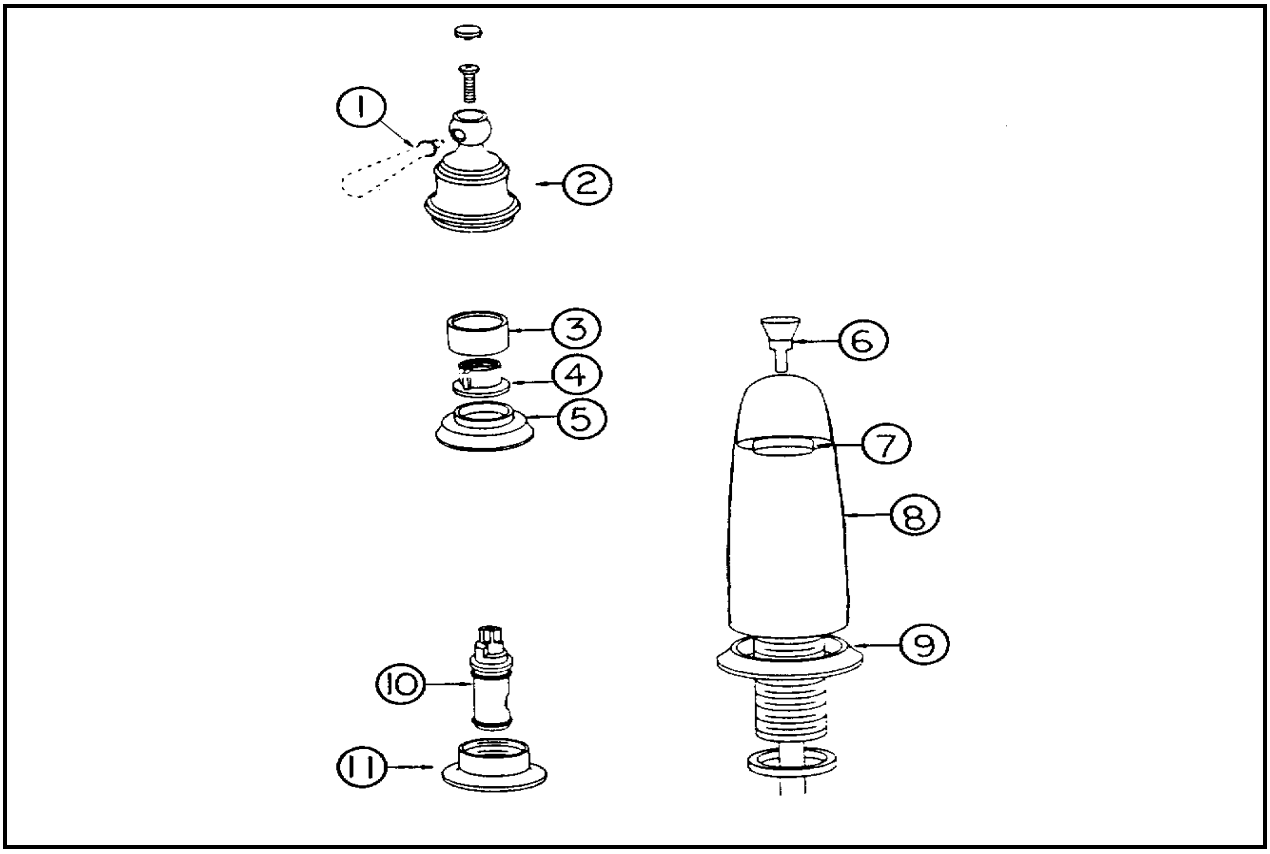

690421	Faucet, lavatory, brass, Moen #5951P
690421-01	Faucet, handles, brass, Moen
1. 690421-01	Handles, Moen (separate from faucet)
2. 690421-100	Hub, lever handle, hot, Moen #5951P
2a) 690421-101	Hub, lever handle, cold, Moen #5951P
3. 690421-102	Handle adapter kit, Moen #5951P
4. 690421-104	Lift rod and knob, Moen#5951P
5. 690421-105	Flowrator aerator, Moen #5951P
6. 690421-106	Spout kit, Moen faucet #5951P
7. 690421-107	Escutcheon, spout, Moen #5951P
8. 690421-108	Cartridge, Moen faucet #5951P
9. 690421-109	Handle escutcheon, Moen #5159P

2005 390/396/Sky Deck XL

PLUMBING, FRESH WATER

Faucet, Lavatory, Sky Deck

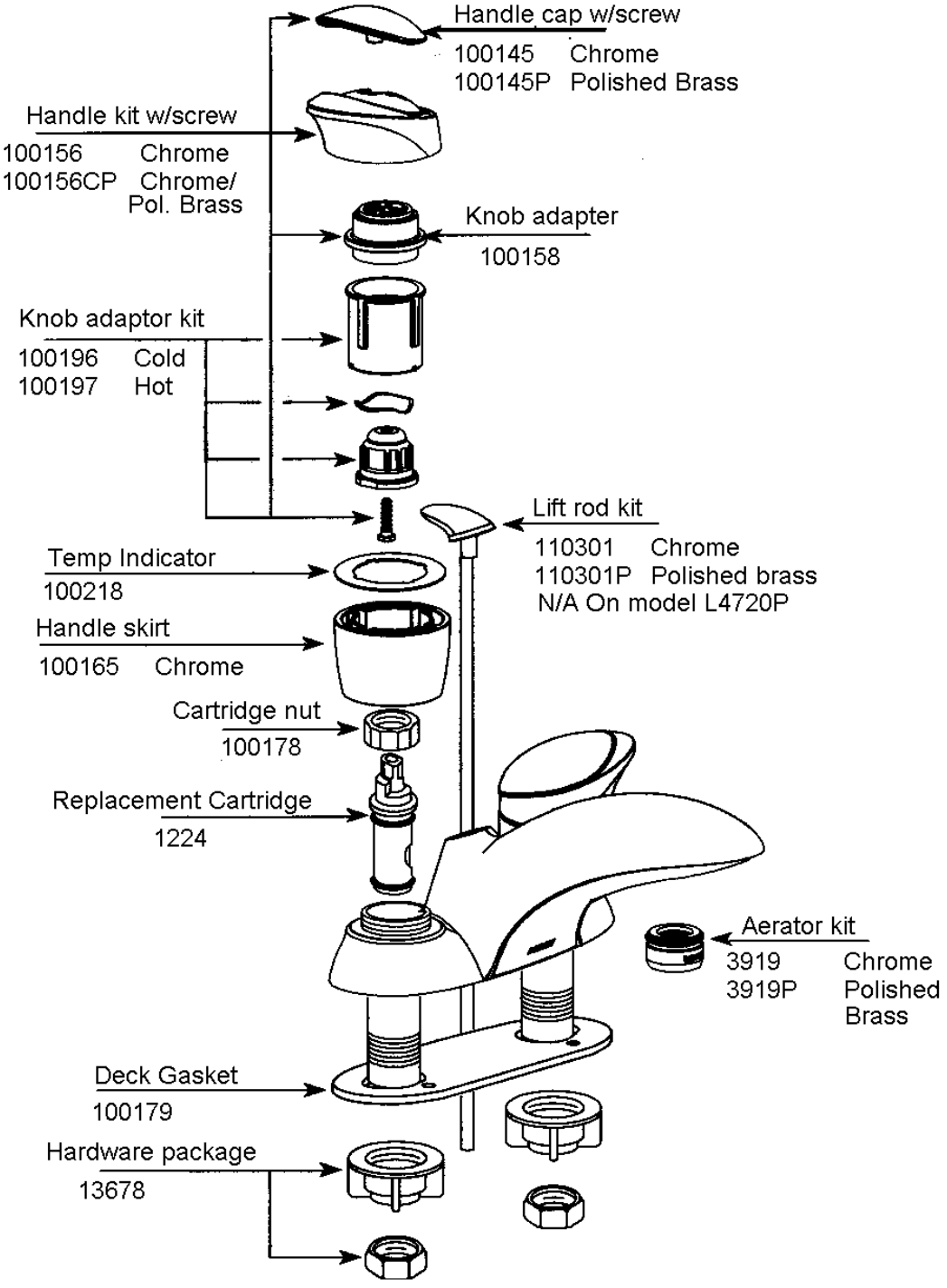

601882 FAUCET MOEN VILLETA

2005 390/396/Sky Deck XL

PLUMBING, FRESH WATER

Faucet, Shower

1.	601830	Brass shower faucet trim kit, Moen Valetta MDL TL2391CP
2.	601831	4-port posi-temp valve
	690422	Showerhead, w/bar, brass, 390
	601661	Coupler, 1/2”MPT, brass
	601772	Spout, tub
	601761	DROP ELBOW, POLISHED BRASS, MOEN
	601362-01	DRAIN, POLISHED BRASS #728-MP-X

Faucet, Sky Deck, Wet Bar

601820	Wet bar, faucet, Sky Deck

2005 390/396/Sky Deck XL

PLUMBING, DRAIN

Utility Compartment

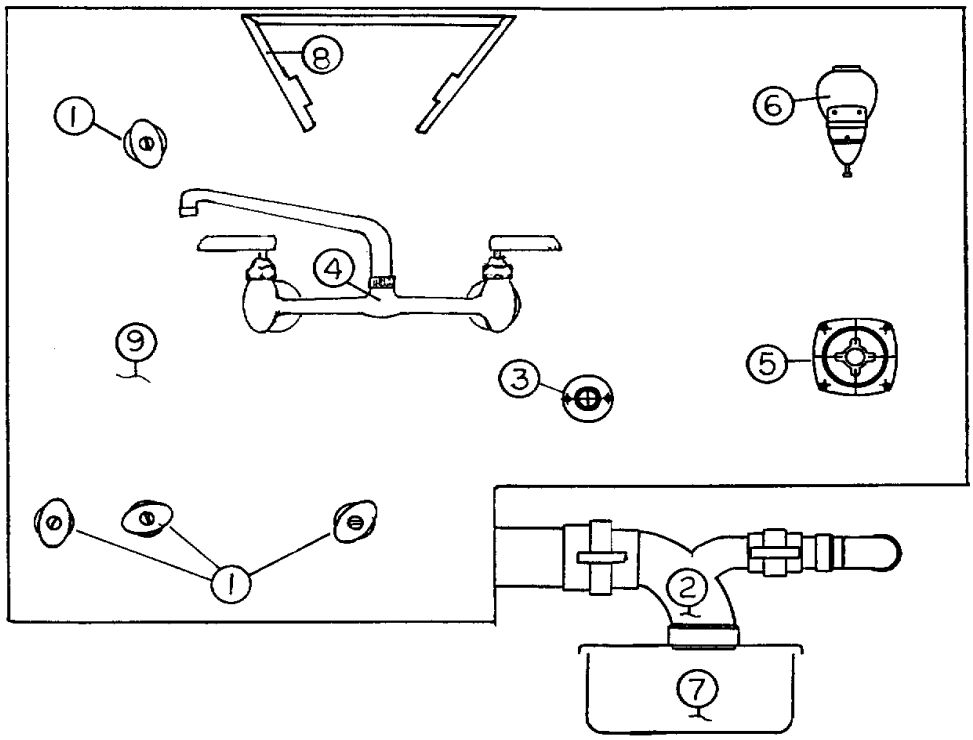

1. 601698-22	Shut-off, ½ barb x ½ barb
2. 601482	Dump valves, includes gray and black w/drop out
3. 601786	Water hook up, black water flush
4. 601742	Faucet, BK, heavy duty
5. 601392-04	City water hook up w/ regulator
6. 381651	Dispenser, liquid soap
7. 203201	Pan, sewer hose storage
8. 203035	Holder, paper towel
511045-02	Hatch, electrical, polar white
381435	HATCH, ACCESS COVER, 4" WHITE
381463-02	Cover access hatch, sewer hose, black, 5”
385931-01	Decal sheet, all panel decals
801281	Utility panel support
690264-03	PLUMBING FLASHING V-2049-1 WHITE
701538	Carpet, Black Velour
511605	Exterior water pump switch

2005 390/396/Sky Deck XL

PLUMBING, DRAIN

Tank, 390

601860-01	TANK-GRAY HOLDING 79 GALLONS
601865-01	TANK-BLACK HOLDING 55 GALLONS
453757	ANGLE-TANK STOP 10"
453756	BRACE-FRESH WATER TANK
963557	SPACER BLACK TANK GAS BUS
203227	SLOPE PAD-.60” X 43” X 61”
601441	Tank flush, no-fuss (vacuum breaker and Check valve)
601441-01	Nozzle, tank mounted, no-fuss flush

Sewer Hose

601607-08	Sewer hose, 20’, w/hose adaptor
01664	CAP POSITIVE SEAL THETFORD 3IN

Shower/ Sinks 390/396

203210-01	Shower stall
601362-01	Drain, shower, polished brass
601896	Lavatory top & bowl, Corian, Midnight
601896-01	Lavatory top & bowl, Corian, Sandstone
601896-02	Lavatory top & bowl, Corian, Everest
601740-02	Side splash, Corian, RH
601741-02	Side splash, Corian, LH
385940	Mirror pull, brass
381526-03	DRW SLIDE-950-RV 18" 450MM PER
381526-06	BRACKET ADJUSTABLE REAR
601832	Lavatory bowl, Corian, Glacier White
601633-05	Sink, galley, porcelain, White
600968	Basket strainer
381635	SINK CLIP, UNDER MOUNT
601897	SINK COVER-RH-MIDNIGHT
601897-01	SINK COVER-RH-SANDSTONE
601897-02	SINK COVER-RH-EVEREST
601902	SINK COVER, LH-MIDNIGHT
601902-01	SINK COVER, LH-SANDSTONE
601902-02	SINK COVER, LH-EVEREST

2005 390/396/Sky Deck XL

PLUMBING, DRAIN

Shower/ Sinks, 390 Sky Deck

203210-01	Shower stall
601362-02	Drain, shower, polished brass
601633-05	SINK PORCELAIN 18 X 32 WHITE
600968	BASKET STRAINER
381635	CLIP SINK
320130-05	SCREW-#10-32 X .75" SLOT HEX H
203433-01	SINK COVER-RH PLASTIC
203433-02	SINK COVER-LH PLASTIC
601570-05	TRIM RING-GALLEY SINK
601820	FAUCET-WET BAR
601819	Sink, wet bar, Sky Deck
195362-39	2" STRAINER ,MODEL # 7466JR
600622	P-TRAP 1-1/2 W/SLIP NUT & WASHER
601714-01	TAIL PIECE 1-1/2” X 4”
104527-01	EXTRUSION, J-TRIM-BRITE ANODIZED SILVER
381568	SEAL EXTRUDED 1.25 X .625 EPDM

2005 390/396/Sky Deck XL

PLUMBING, DRAIN

Drain Line System, 390

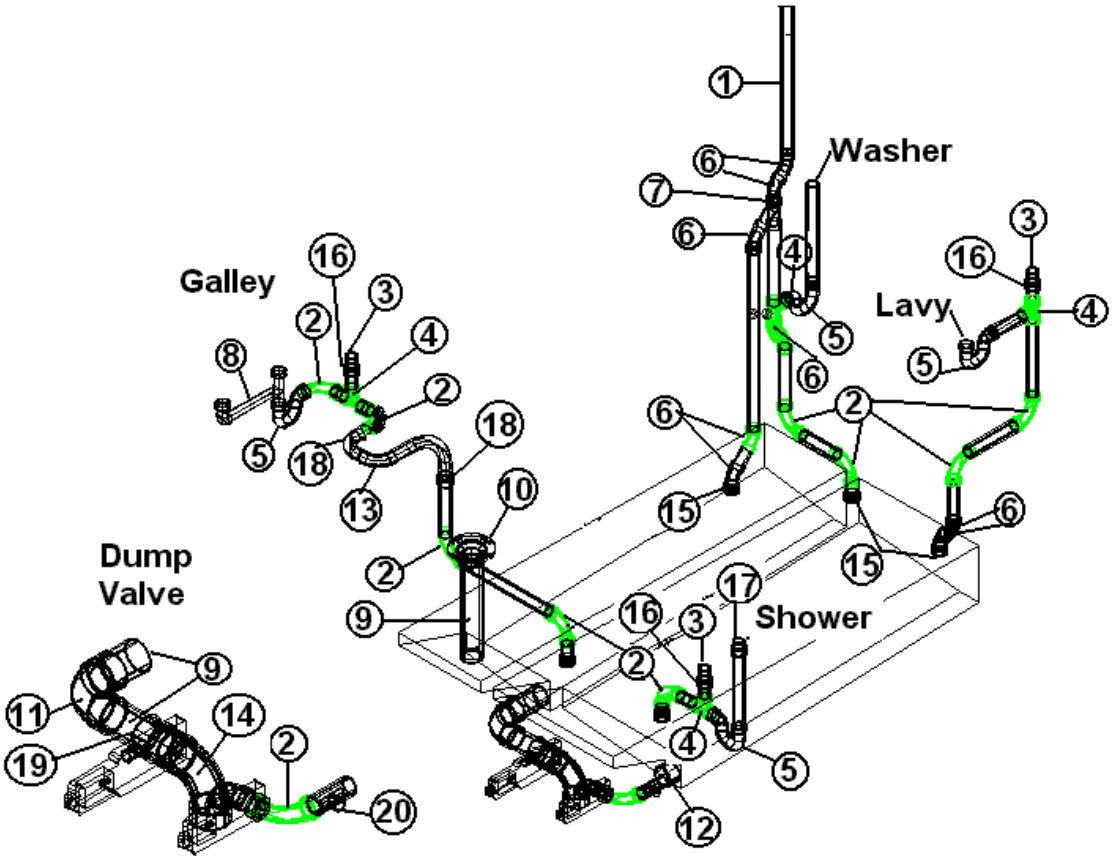

2005 390/396/Sky Deck XL

PLUMBING, DRAIN

Drain Line System, 390

1.	601160-02	PIPE, ABS DVW, 1.5”
2.	600035	ELL ABS LONG SWEEP 1.5”
3.	600538	VENT V-200 AUTOMATIC
4.	600156	TEE SANITARY
5.	600622	P-TRAP 1-1/2 W/SLIP NUT & WASH
6.	600027	ELBOW ABS LONG ST 45 DEGREES
7.	600094	WYE #2301
8.	600378	CONTINUOUS WASTE 1.5”
9.	601160-04	PIPE, ABS DVW, 3"
10.	601266	FLANGE, CLOSET, 3 X 4, SLIP FIT
11.	600820	3"SINGLE SOCKET 90 DEGREE
12.	195329-229	REDUCER ADAPTOR 3" TO 1.5"
13.	601700-01	HOSE-DRAIN TIGER, FLEX 1.5"
14.	601482	DUMP VALVE ROTATING ASSY.
15.	601676	ADAPTER THREADED 1 ½” MALE
16.	600308	ADAPTER ABS FEMALE SLOAN
17.	600625-01	PLUG, TRAP, 1 ½” ADAPTER, FEMALE 600144 P TRAP ABS 1.5”
18.	601699	ADAPTER 1 ½” MPT X 1 ½” BAR
	601845	ADAPTOR-1.5", PIPE CATCON
	601846	ADAPTOR-3", PIPE CATCON
	511789	SENSOR-TANK MONITOR #500-10050
	511393	COUPLER-MODULAR EXTENSION 4 CONDUCTOR
	511252	PLUG PHONE 4 CONDUCTOR
	511789-01	BOOT-SENSOR #500-20010-05
	01664	CAP POSITIVE SEAL THETFORD 3IN

2005 390/396/Sky Deck XL

PLUMBING, DRAIN

Toilet, Thetford, Aurora

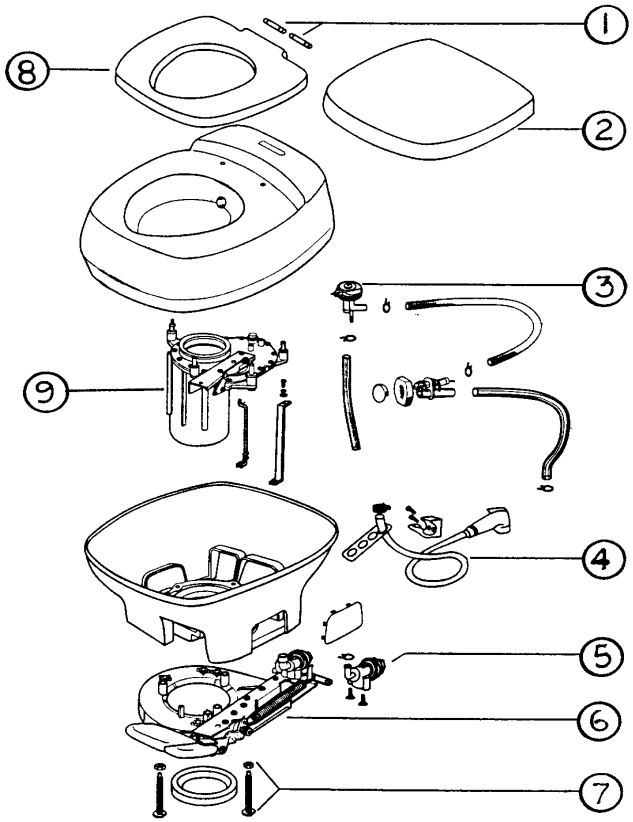

*690386	Toilet, Thetford China, Aurora, bone
1. 690386-101	Hinge pins, seat, Aurora
2. 690386-102	Seat cover, bone, Aurora
3. 690386-103	Vacuum breaker, Aurora
4. 690386-104	Hand spray kit, Aurora
5. 690386-105	Ball valve kit, Aurora
6. 690386-106	Lower mechanism, bone, Aurora
7. 690386-107	Closet flange seal & bolt kit
8. 690386-108	Seat, bone, Aurora
9. 690386-109	Upper mechanism, bone, Aurora

Replaced by 690511 Thetford Style Plus model during model year.

Toilet, Thetford, Style Plus

690511	Toilet, Thetford, Style Plus
690511-101	Antibacterial Seat & Cover – Bone
690511-102	Water Valve
690511-103	Waste Ball Drive Arm
690511-104	Water Valve Drive Arm
690511-105	Pedal Cable Kit
690511-106	Water Valve Return Spring
690511-107	Waste Ball - White
690511-108	Waste Ball Seal
690511-109	Vacuum Breaker
690511-110	Water Saver - Hand Sprayer
690511-111	Closet Bolt Package - (Incl. Bone Caps)
690511-112	Pedal - Bone
690511-113	Waste Ball - Black
690511-114	Nozzle - White
690511-115	Shroud O-ring package
690511-116	Shroud O-ring - Bulk pack of 20 set
690511-117	High Shroud - Bone
690511-118	Low Shroud - Bone

2005 390/396/Sky Deck XL

SEALER, GASKETS

Gaskets, Windows/Doors

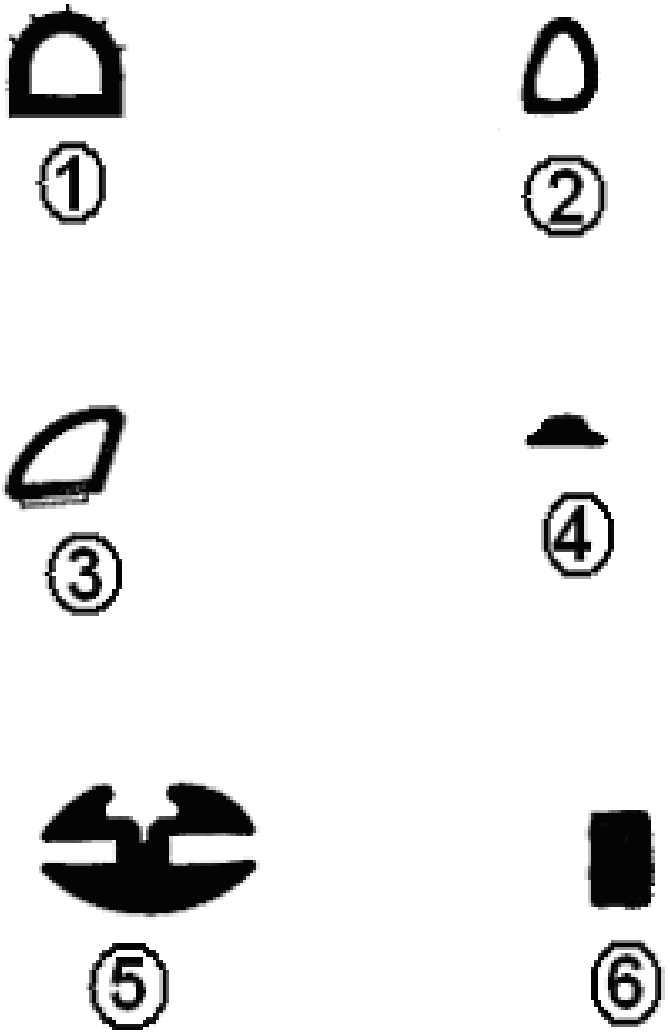

1. 381663 Gasket, lower compartment door
2. 365232 Seal, main door/compartment door jamb
3. 365045 Seal, main doo
4. 201260 Insert, windshield gasket, rubber
5. 381640 Gasket, windshield, includes center strip
6. 365013 Gasket, screen door, low-density foam

2005 390/396/Sky Deck XL

SEALER, GASKETS

Gaskets, Slide Out Room

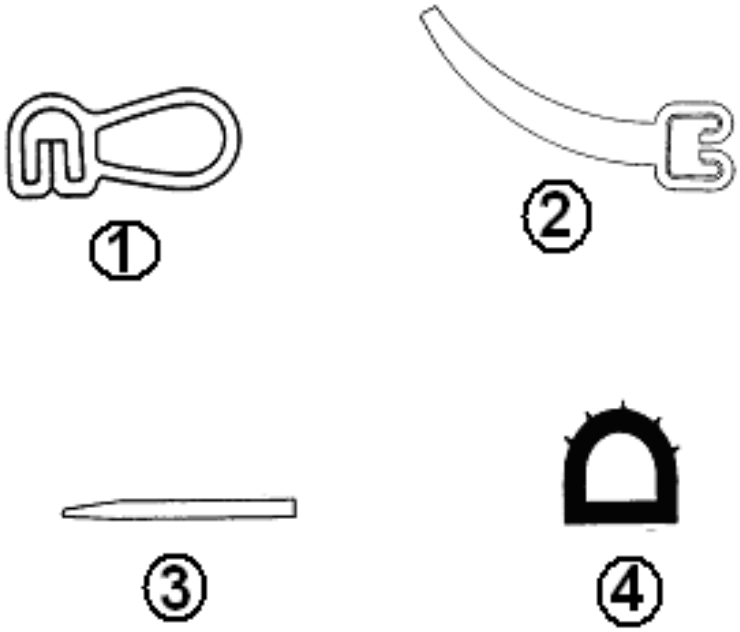

1. 381594 Rubber extrusion, bulb type, black
2. 381587 Rubber extrusion, wiper
3. 381589 Rubber extrusion, floor wiper
4. 381663 Rubber floor, extrusion, bulb w/tape, used on inside wall

381396 Gasket, clearance light, neoprene
365263 Gasket, engine cover
381830 Gasket, wiper, refer compartment seal. 1.12” x 2”

SEALER, GASKETS

Gaskets, SE-GI Windows

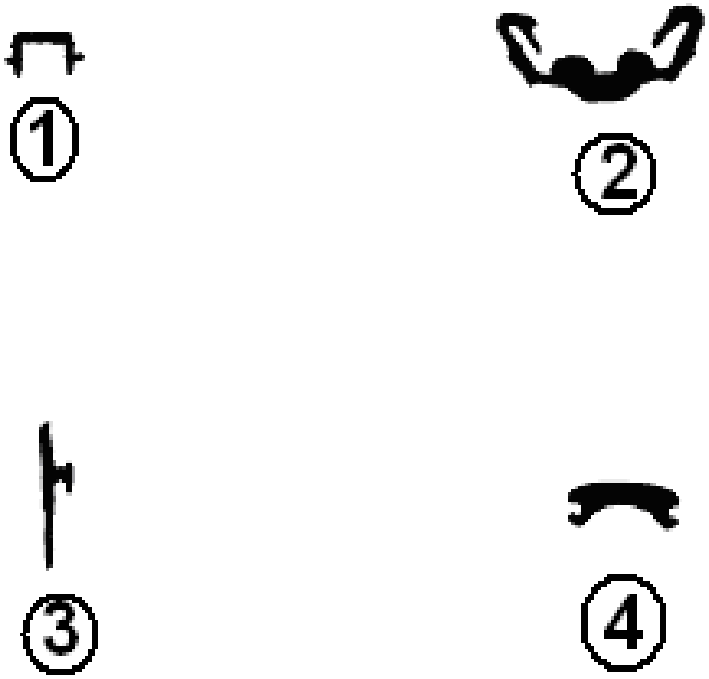

1. 371366-103 Track, window screen, Se-Gi
2. 371366-102 Track, sliding pane, Se-Gi
3. 371366-104 Wiper seal, vertical, Se-Gi
4. 371366-105 Screw cover, clamp ring, Se-Gi

2005 390/396/Sky Deck XL

SEALER, GASKETS

Sealer

360209-02	Sealer, black, windshield
360052	Vulkem sealer, black,
360180	Sika flex #221
360268-01	Liqua Seal, roof, white
360281	Sealant, thermoplastic rubber (clear)
360180-01	Sealant, Bostik urethane
365256	ADHESIVE, INDUSTRIAL #4799
360074	Sealant, GE RTV, white
360001	Butyl sealant
360176	Sealant, almond, bathroom
360210	Sealant, paralastic #4334-04 (refrigerator compartment sealer)
360283-01	Silicone sealer, Corian, Glacier White
360286	Sealant, gray
360259	Silicone glazing sealant, range
360069-01	Sealer, 1/8 x 1 1/4 putty tape
365287	SEALANT URETHANE-1100 FAST SET

Tape

365001	Tape, double coated foam
365235	TAPE DBL COATED .12 X 1.00
365245	TAPE, .045” X 1” X 36' DBL COATED
385577	TAPE CLEAR WEAR STRIP 3.5" WIDE
368276	Tape, reflective, yellow and black

2005 390/396/Sky Deck XL

UPHOLSTERY/FOAM/MATTRESS

Mattress

702987	Mattress, pillow top
701611	Pillow 21 x 31”
703260-364	Duvet/duster kit, Crystal creek
703260-404	Duvet/duster kit, Willow
703260-141	Duvet/duster kit, Chiffon
703260-01	Duvet, 86” x 80”, w/zipper top
703260-02	Duster w/boxed pleats

Pillow Kit, Crystal Creek

703442-01	Lounge Pillow
703442-03	Bedroom Pillow
703442-04	Bedroom Pillow

Pillow Kit, Willow

703443-01	Lounge Pillow
703443-03	Bedroom Pillow
703443-04	Bedroom Pillow

Pillow Kit, Chiffon

703444-01	Lounge Pillow
703444-03	Bedroom Pillow
703444-04	Bedroom Pillow

Golden Touch Pillow Kit

703371-01	Lounge & Bedroom pillows, 4 each unit
703371-02	Lounge pillow, 1 each unit
703371-03	Bedroom Pillows, 1 each unit
703371-04	Pillow Sham, 2 each unit

2005 390/396/Sky Deck XL

UPHOLSTERY/FOAM/MATTRESS

Sofas, USA

703268-364	Sofa, 74”, cloth, Crystal Creek
703268-404	Sofa, 74”, cloth, Willow
703268-141	Sofa, 74”, cloth, Chiffon
703268-02	Sofa, 74”, Leather option
702965-02	Sofa, 1000 Style, leather, J-lounge option
702965-364	Sofa, 1000 Style, cloth, J-lounge, Crystal Creek
702965-404	Sofa, 1000 Style, cloth, J-lounge, Willow
702965-141	Sofa, 1000 Style, cloth, J-lounge, Chiffon
601925	Beverage tray, Corian, J-lounge Midnight
601925-01	Beverage tray, Corian, J-lounge Sandstone
601925-02	Beverage tray, Corian, J-lounge Everest
703117-02	Love seat, 52”, Villa

Sofas, CSA

703269-364	Sofa, 74”, cloth, Crystal Creek
703269-404	Sofa, 74”, cloth, Willow
703269-141	Sofa, 74”, cloth, Chiffon
703269-02	Sofa, 74”, Leather option

Chairs/Recliners

703047-02	RECLINER, AVANTGLIDE W/OTTOMAN
703009-05	Chair, folding, free standing dinette
703457-364	Chair, residential, Crystal Creek
703457-404	Chair, residential, Willow
703457-141	Chair, residential, Chiffon

2005 390/396/Sky Deck XL

UPHOLSTERY/FOAM/MATTRESS

Seats, Driver, passenger

703278-051	Seat, driver, power w/belts
703278-031	Seat, drivers, power, w/vibrasonic
703278-071	Seat, passenger, w/power, footrest
703279-021	Seat, passenger, manual, w/belts
703280-021	Seat, passenger, power, w/belts, option
703280-02	Buddy seat, passenger w/foot rest
511503	Kit, Vibrasonic

Wall Border

702988-01	WALL WEAVE 1/8" HYROGLYPHIC RUNES
703020	WALL WEAVE-ALLURE, COCOA , 3/16” BACK

Ceiling Liner

702992	Headliner, ceiling vinyl, Petra Cuddy
*702992-02	Headliner, Neutral

*Replace 702992 during model year PCN 5130. One roll sent to service 5/11/05

Sun Visors

381756-01	SUN VISOR ADJUSTABLE 96-777-3LHR
381756-02	SUN VISOR ADJUSTABLE 96-777-3RHR

Edge Banding

365250-003	Edge banding, 5/8”, oak
365265-01	EDGE BANDING-5/8" NORTHERN OAK

2005 390/396/Sky Deck XL

VENTS/FANS/SKY LIGHTS

Refrigerator Vent

381207-03	Vent, roof, Dometic, polar white
381207-02	Vent w/screen, refrigerator, roof

Vent, Power Lift, Bath

381541-08	Roof vent w/power lift, white
381541-02	Switch, roof vent
381541-07	TRIM RING, LIGHT BEIGE
381541-09	TRIM RING, WHITE

Vent, Bath, Round

690266-01	Ventilator, round, bath

Power Fan, Ceiling

381841-01	Vent, Fantastic fan, Exhaust only, Beige

Power Fan w/Thermostat, Ceiling

381564-02	Fantastic fan w/thermostat, option
381541-09	Trim ring, roof vent, white

Fan, Defrost

511547	Fan, defrost
511327	SWITCH BODY W/ROCKER SW.1GANG

2005 390/396/Sky Deck XL

VENTS/FANS/SKY LIGHTS

Vent, Washer/Dryer

386145	VENT KIT -DRYER PAINTABLE

Vent, Rear A/C Sky Deck

115143	VENT CHANNEL-REAR A/C EXHAUST
115144	BAFFLE-FRT A/C HEAT EXHAUST
115127	PNL-CLOSE OUT 20.09"X 85.75"
101134	ANGLE ALUM,1/8 X 1 X 1 ½”
203435	VENT-2.75" X 17.53"FLUSH MOUNT

Range Vent, Exterior

511017-02	VENT, EXTERIOR COLONIAL WHITE
511017-20	VENT EXTERIOR WHITE 4 LOUVRE CSA

Sky Light, 14.5” x 22.5”

203148-01	Skylight, 14.5 x 22.5
203148-02	Inner trim, dome, skylight, 14 x 22
702804-01	Shade, pleated, skylight, 12.75” X 21.25”

Sky Light, 14.” x 22”, Clear

203153-02	SKYLIGHT 14 X 22 CLEAR
203152-04	SKYLIGHT PLASTIC. 13.25 X 21 Cream

Galley Sky Light w/Shade

702804-02	Shade, pleated, 20.25 x 21.00
203153-01	Skylight, 2” x 22”, clear
203152-05	Trim ring, skylight, 21.5” x 21.5” x 4”

2005 390/396/Sky Deck XL

WOOD/INTERIOR TRIM

Paneling

801260-003	Paneling 5/32”x 4’x 8’, G1S, Hickory/raw
801181-006	Paneling 5/32”x 4’x 8’, G1S, Oak/raw
801259-003	Paneling, ½” x 4’ x 8’, G1S, Hickory/raw
801179-006	Paneling, ½” x 4’ x 8’, G1S, Oak/raw
801258-003	Paneling ½” x 4’ x ’, G2S, Hickory/Hickory
801180-006	Paneling ½” x 4’ x ’, G2S, oak/oak
800397-01	Cedar, planked, 5/32”x4’x 8’
801505	Panel, Ascot Sand/Raw, .125" X 4' X 8'
801506	Panel, Ascot Sand/Raw, .5" X 4' X 8'
801509-003	PANEL, Hickory/ASCOT .5" X 4 'X 8
801509-006	PANEL, OAK/ASCOT .5" X 4 'X 8
801507	PANEL, ASCOT SAND/SAND G2S .5" X4' x 8’

Seam Tape

365286-01	Tape, seam, Ascot Sand, 1 1/8” wide
365286-02	Tape, seam, Ascot Sand, 8” wide
365286-03	Tape, seam, Ascot Sand, 12” wide
365286-04	Tape, seam, Ascot Sand, 48” wide

Dinette Wainscot, Oak

965081-006	FRAME, WAINSCOT DINETTE WALL, OAK
965080-006	FRAME, WAINSCOT REFER WALL, OAK
703020	WALL WEAVE-ALLURE COCOA 3/16 BACK
964808-006	POST-WIRE RUN CS, Oak
801300-006	DECORATIVE BOARD BELOW POST, CS, Oak

Dinette Wainscot, Hickory

965081-003	FRAME, WAINSCOT DINETTE WALL, Hickory
965080-003	FRAME, WAINSCOT REFER WALL, Hickory
703020	WALL WEAVE-ALLURE COCOA 3/16 BACK
964808-003	POST-WIRE RUN CS, Hickory
801300-003	Decorative board below post, CS, Hickory

2005 390/396/Sky Deck XL

WOOD/INTERIOR TRIM

Molding Wood, Oak

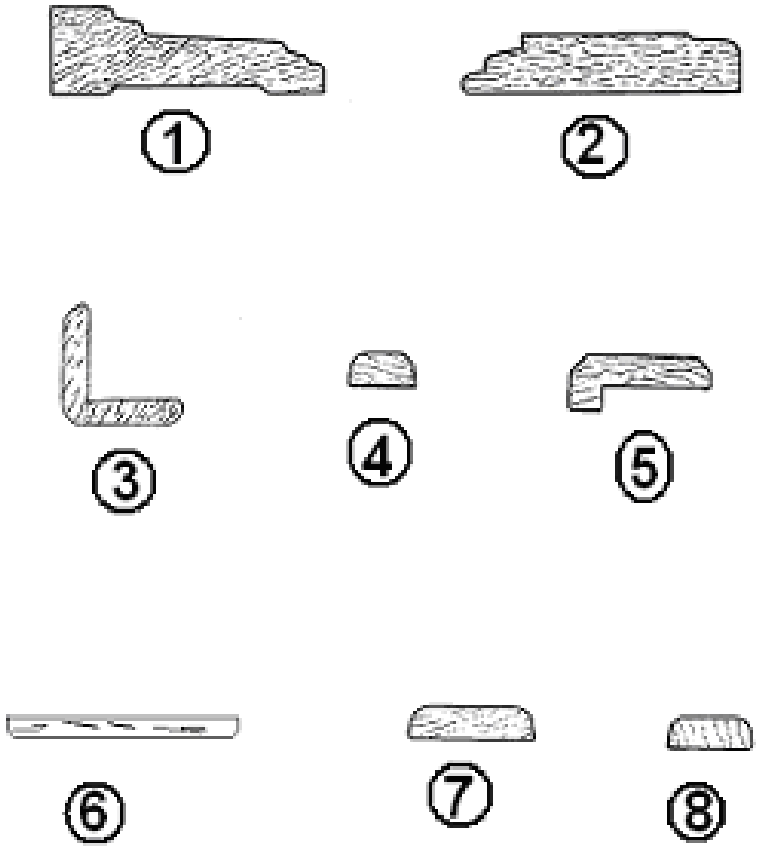

1. 801266-006	Molding, base board
2. 801265-006	Molding, chair rail, oak
3. 801175-07	Molding, corner, Ascot Sand
4. 800571-016	Molding, Oak, flat .25”H x .52”W x 80”L
5. 800617-016	Molding, Wainscot, oak
6. 800573-60	MOLDING, DOOR EDGE, WALNUT
7. 800573-016	Molding, door edge, Oak 1 3/32 x 80”
7. 800573-606	Molding, flat radius, 1.13”, door edge
8. 800572-016	Molding, panel edge, Oak 23/32 x 80”

2005 390/396/Sky Deck XL

WOOD/INTERIOR TRIM

Molding Wood, Hickory

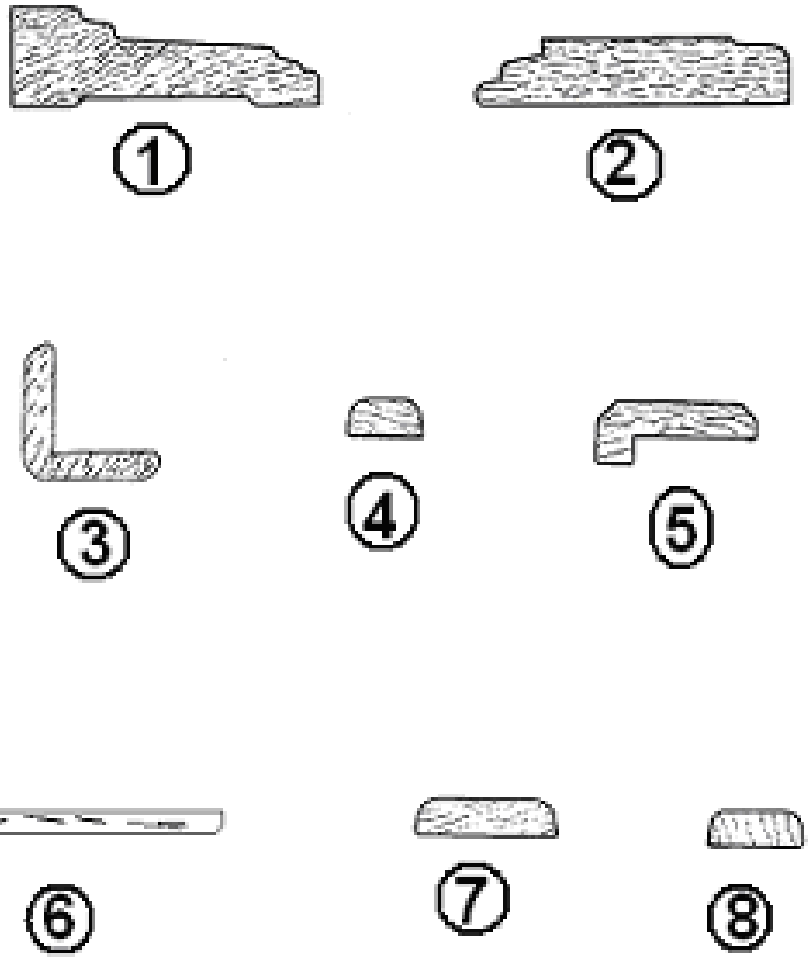

1. 801266-003	Molding, base board
2. 801265-003	Molding, chair rail, oak
3. 801175-07	Molding, corner, Ascot sand
4. 800571-013	Molding, Oak, flat .25”H x .52”W x 80”L
5. 800617-013	Molding, Wainscot, oak
6. 800573-60	MOLDING, DOOR EDGE, WALNUT
7. 800573-013	Molding, door edge, Oak 1 3/32 x 80”
7. 800573-603	Molding, flat radius, 1.09”, door edge
8. 800572-013	Molding, panel edge, Oak 23/32 x 80”

2005 390/396/Sky Deck XL

WOOD/INTERIOR TRIM

Plastic Trim

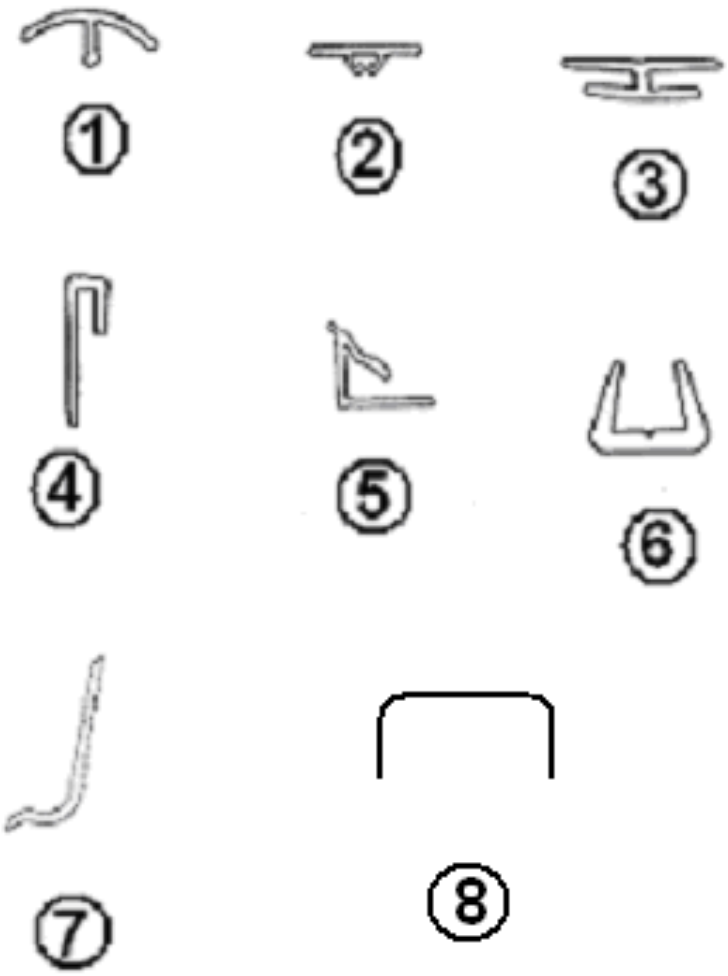

1)	201728-05	Extrusion, ceiling trim, almond
2)	201728-01	Extrusion, ceiling trim retainer
3)	203159-04	Divider bar, interior panels, Ascot Sand
4)	201666-01	J-Molding, 3/16, plastic, Almond
5)	201790-01	Molding, cove, white, ceiling to wall
6)	203138-03	Extrusion, wall, plastic, beige
7)	203138-04	Extrusion, wall, plastic, oak
8)	201936	Wire cover, Dark Brown
	203157	Molding, baseboard, PVC

2005 390/396/Sky Deck XL

WOOD/INTERIOR TRIM

Molding, Wood, Oak

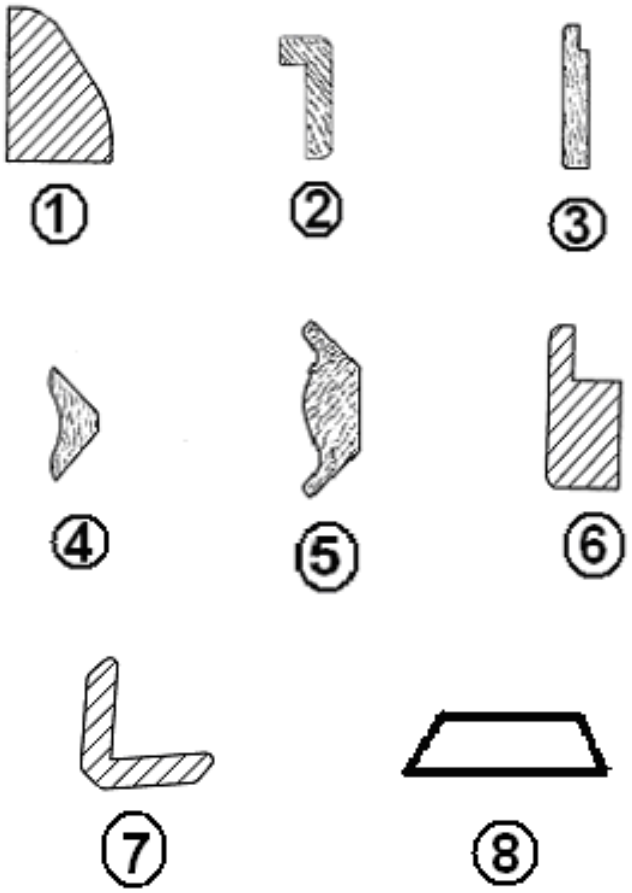

1. 800576-016	Molding, bath doorstop, oak
2. 964822-006	Molding, shower stall
3. 964914-006	Mirror trim, sides
4. 801268-006	Molding, inside corner
5. 801267-006	Molding, crown
6. 801270-006	Molding, panel end trim
7. 800575-016	Molding, hardwood, Corner
8. 801178-06	Molding, flat.81” w/chamfer, Ascot Sand
201785-01	TRIM-OUT, FLOOR, 3-1/2" ROUND
702963	VINYL EMBOSSED 1.75W THRESHOLD, Sky Deck roof hatch

2005 390/396/Sky Deck XL

WOOD/INTERIOR TRIM

Molding, Wood, Hickory

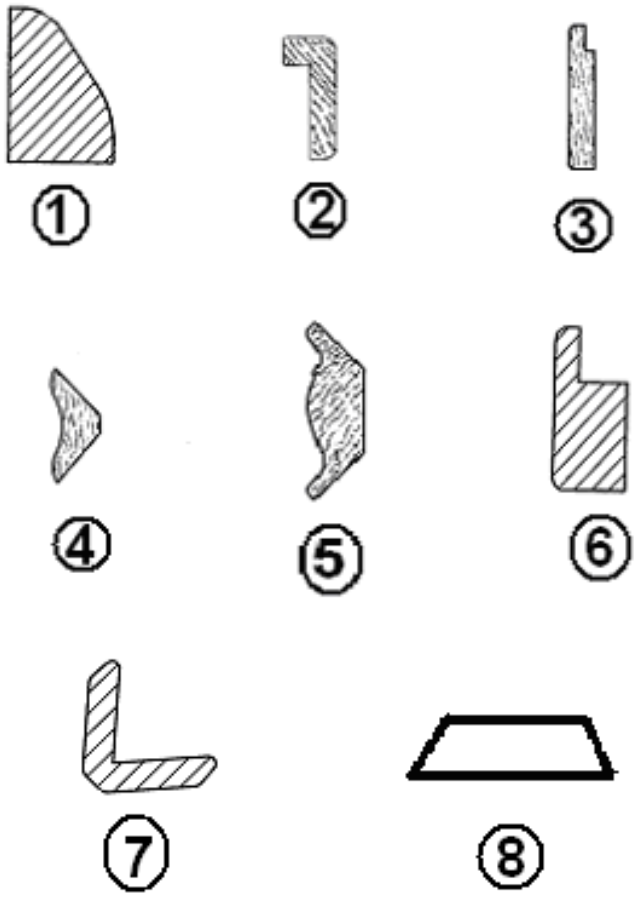

1. 800576-013	Molding, bath doorstop, oak
2. 964822-003	Molding, shower stall
3. 964914-003	Mirror trim, sides
4. 801268-003	Molding, inside corner
5. 801267-003	Molding, crown
6. 801270-003	Molding, panel end trim
7. 800575-013	Molding, hardwood, Corner
8. 801178-06	Molding, flat.81” w/chamfer, Ascot Sand
201785-01	TRIM-OUT, FLOOR, 3-1/2" ROUND
702963	VINYL EMBOSSED 1.75W THRESHOLD, Sky Deck roof hatch