adventure, inspired by

AIRSTREAM

2018 International Parts Book

2018 INTERNATIONAL
SECTION I

APPLIANCES

Air Conditioner I-1
Air Conditioner Drain Kit I-1
Water Heater I-1
Furnace I-2
Microwave I-2
Range and Cooktop I-3
Refrigerator I-3

EXTERIOR SHELL

Front End Shells I-4
Aft End Shells I-12
Aft End Shell, Twin I-22
23CB RS Wall I-24
23CB CS Wall I-26
23FB RS Wall I-28
23FB CS Wall I-30
25' RS Wall I-32
25' CS Wall I-34
25FB RS Wall I-36
25FB CS Wall I-38
27FB RS Wall I-40
27FB CS Wall I-42
28' RS Wall I-44
28' CS Wall I-46
30' RS Wall I-48
30' CS Wall I-50
Roof I-52
Wrap Protectors and Holdbacks I-53

2018 INTERNATIONAL
SECTION I

INTERIOR SHELL

Interior Skin I-54
Interior Shell Trim I-54
Main Door Threshold I-54

CHASSIS

Axle's I-55
Shocks I-55
Tires and Wheels, 15" I-55
Spare Tire and Carrier 1-55
Step Assembly 1-56
Bumper and Storage I-58
Stabilizing Jacks I-59
Power Jack I-59
Hose Carrier I-59
Underbelly I-59
Bumper End Caps I-59
Cross Car Electrical Raceway I-59
Hitch Coupler I-59

DECALS, EXTERIOR TRIM

Decals and Medallions I-60
Belt Line Trim I-60
Rub Rail Trim I-60
Reflectors I-60

2018 INTERNATIONAL
SECTION II

DOORS, WINDOWS, AWNINGS

Main Door, LH Hinge II-1
Main Door, RH Hinge II-3
Screen Door II-5
Access Doors II-7
Windows and Screens II-9
Vista View Windows II-12
Main Door Window Trim Ring II-13
Window Trim II-13
Panoramic Window Trim II-13
Window Parts Diagram II-14
Window Stone Guards II-16
Patio Awnings, Signature II-17
Patio Awnings, Serenity II-17
Patio Awning Hardware and Lights II-17
Power Awnings, Signature II-18
Power Awnings, Serenity II-18
Power Awnings Hardware II-18
Power Awnings, A2GO II-18
Window Awnings, Signature II-19
Window Awnings, Serenity II-19

DRAPES AND SHADES

23CB Signature II-20
23CB Serenity II-21
23FB Signature II-22
23FB Serenity II-23
25' Signature II-24
25' Serenity II-25
25FB Signature II-26
25FB Serenity II-27
27FB Signature II-28
27FB Serenity II-29
28' Signature II-30
28' Serenity II-31
30' Signature II-32
30' Serenity II-33
Drapes and Shades Hardware II-34

2018 INTERNATIONAL
SECTION II

ELECTRICAL

110 Volt

Shoreline Cord and Inlet II-35
Power Converters II-35
Breakers and Breaker Box II-35
Inverter II-35
Generator Prep II-36
Junction Boxes II-36
Receptacles II-36

12 Volt

Battery and Battery Box II-37
Battery Disconnect II-37
7-Way Cable and Breakaway Switch II-37
Tank Monitor System II-37
Solar Panel System II-37
Breakers II-38
Fuses II-38
Switches and USB Ports II-38
Power Awning Cables II-38
Wireless Backup Camera II-38
Exterior Lights II-39
Interior Lights II-39
Taillight Assembly II-40

ENTERTAINMENT

Audio II-41
Video II-41
Blu-Ray Player II-42
Flat Screen TV's II-42

2018 INTERNATIONAL
SECTION III

FLOOR COVERINGS

Floor Covering III-1
Furniture and Cushion Batting..... III-1

FURNITURE

INTERIOR DOORS, DRAWER BOXES, AND MIRRORS

Roof Locker Doors III-2
Foldette Doors III-3
Drawer Boxes III-4
Drawer Slides III-4
Mirrors..... III-5

BEDROOM

Beds, Queen..... III-6
Beds, Twin III-26
Nightstands, Queen Beds III-40
Nightstands, Twin Beds.....III-46
Closets.....III-48
Roof Lockers.....III-52
Wardrobes.....III-62
Wardrobes, Hanging III-90

LAVATORY

Bath Modules.....III-98
Shower Compartments.....III-116
Latrine III-122
Lavatory Doors, Signature III-126
Lavatory Doors, Serenity.....III-132
Medicine Cabinets.....III-136
Lavatory Cabinet, 23CB.....III-142
Lavatory Cabinet, 23FB III-144
Lavatory Cabinet, 25'.....III-148
Lavatory Cabinet, 25FB III-154
Lavatory Cabinet, 27FB III-158
Lavatory Cabinet, 28'.....III-162
Lavatory Cabinet, 30'.....III-166
Wardrobes.....III-172

2018 INTERNATIONAL
SECTION III

FURNITURE

GALLEY

Galley, 23CB III-202
Galley, 23FB III-209
Galley, 25' III-216
Galley, 25FB III-225
Galley, 27FB III-238
Galley, 28' III-251
Galley, 30' III-260
Refrigerator and Microwave Cabinets III-271
Refrigerator Cabinets III-279
Pantry Cabinets III-285
Flip Shelves III-311
Water Heater Cover III-312
Roof Lockers III-314
Dinette Seats III-330
Dinette Tables III-337

LOUNGE

Dinette Seats III-339
Dinette Tables III-353
Roof Lockers III-355
Sofa's III-361
Sofa Beds III-376
Magazine Rack III-378
Camp Chair, 23FB A2GO III-378

2018 INTERNATIONAL
SECTION III

HARDWARE

Main Door Lock, Left Hand Hinge III-379
Main Door Lock, Right Hand Hinge III-380
Window Hardware III-381
Exterior Latches, Locks, and Handles III-382
Head knocker and Rubber Bumpers III-383
Exterior Hinges III-383
Interior Latches and Handles III-384
Interior Hinges III-384
Bathroom Accessories III-385
Clothes Line III-385
Dinette Table Hardware III-385
Bed Gas Springs III-385
Key Hooks III-385
Awning Hardware III-386
Rivets III-388
Screws III-388

SAFETY EQUIPMENT

Detectors and Fire Extinguishers III-389

LABELS AND TAGS

Labels and Tags, USA III-390
Labels and Tags, CSA III-391

2018 INTERNATIONAL
SECTION IV

PLUMBING

LPG SYSTEMS

LPG System, 23CB IV-1
LPG System, 23FB IV-2
LPG System, 25', 25FB IV-3
LPG System, 27FB IV-4
LPG System, 28' IV-5
LPG System, 30' IV-6
LPG Tanks and Covers IV-7
Propane Port, Exterior IV-8

FRESH WATER

Faucet, Galley IV-9
Faucet, Lavatory IV-10
Faucet, Shower IV-11
City Water Hook-Up IV-12
Fresh Water Tank Fill IV-12
Water Pump IV-12
Fresh water Tanks IV-13
Fresh Water Fittings IV-14
Fresh Water Lines IV-15

DRAINS

Drains, Above Floor IV-22
Tank Drains IV-34
Dump Valves IV-36
Sinks and Showers IV-40
Toilet Flange IV-41
Black Tank Flush IV-41
Drain Fittings IV-42
Toilet, 23CB, 23FB IV-43
Toilet, 25', 25FB, 27FB, 28', 30' IV-44

SEALERS AND GASKETS

Sealers IV-45
Gaskets IV-45
Gasket Kits IV-46

2018 INTERNATIONAL
SECTION IV

BEDDING, MATTRESSES

Pillow Kits, Signature IV-47
Pillow Kits, Serenity IV-47
Sheet Sets and Mattress Pads, A2GO IV-47
Mattresses and Bedspreads IV-48

UPHOLSTERY, FOAM, ULTRALEATHER

Dinette Cushions, 23CB IV-49
Dinette Cushions, 23FB IV-50
Dinette Cushions, 25' IV-51
Dinette Cushions, 25FB, 27FB IV-52
Dinette Cushions, 28', 30' IV-53
L-Lounge Cushions, 28' IV-54
L-Lounge Cushions, 28' A2GO IV-55
L-Lounge Cushions, 30' IV-56
Décor Boards, Signature IV-57
Décor Boards, Serenity IV-58

VENTS AND FANS

Vent, Black Tank IV-59
Vent, Bath IV-59
Vent, Refrigerator IV-59
Exhaust Fan IV-59

SKYLIGHTS

Skylights IV-60

PANELING, EDGEBANDING, LAUAN

Paneling IV-61
Edgebanding IV-61
Lauan IV-62
Plywood IV-62

TRIMS

Trim IV-63

2018 INTERNATIONAL
APPLIANCES

Air Conditioner

690323-44	Comfort control center II, White
690323-47	Air conditioner, 13.5K BTU w/heat pump
690323-48	Air conditioner, 15K BTU w/heat pump, WB
104948	Air deflector, A/C to refrigerator vent
382276-01	AC register, Adjustable, Brushed Stainless Steel
382234-01	Grill, Return air, Snap in, Brushed Stainless Steel
382236	Filter, Return air
511724	Harness, Ambient temperature sensor, WB
690380-03	Air box, Penguin heat pump
690380-08	Sensor cable, 20’
690380-10	Intake air box and ceiling shroud, White
690380-11	Dust adaptor, Use with 690380-10
690323-481	Upper Circuit Board for 690323-47, -48, -49
690323-480	Shroud Only For A/C 690323-46,-47 & -48, Polar White Only
690323-471	Fan Motor Only For A/C 690323-47

Air Conditioner Drain Kit

203724	Kit, A/C drain
203722	Gasket, A/C drain

Water Heater

690602	Water Heater, 6 gallon, Gas/electric
690209	Water heater access cover, Brushed Aluminum
512480-01	Switch w/gas and electric start, Water heater, Black
511731-01	Switch w/Red indicator light, Black
382262	Gasket, Water heater
967194	Water heater stand
690602-101	Valve Mixer For Water Heater 690602
690602-102	Burner For Water Heater 690602
690602-104	Check Valve For 690602, Brass Fitting With Yellow Knob
690602-105	Circuit Board For Water Heater P/N 690602

2018 INTERNATIONAL
APPLIANCES

Furnace

690663-03	Furnace, 18K BTU, 23FB
690663-06	Furnace exterior door & bezel, Painted Aluminum
690663-0301	Circuit Board For 690663-03
690663-100	Sail switch for 690663-03
115658	Cover, 16K & 18K furnace door, Aluminum
690664-01	Furnace, 25K BTU, 23CB, 25', 25FB, 27FB
690664-02	Furnace, 30K BTU, 28', 30'
690664-05	Furnace exterior door & bezel, Painted Aluminum
115659	Cover, 25K & 30K furnace door, Aluminum
690664-100	Sail switch
690664-0100	Exhaust pipe with end vent for 690664-01
690664-0200	Exhaust pipe with end vent for 690664-02
602394-01	Register, 4", Polar White
602394-02	2" adaptor, Polar White
602394-03	Register, 4", Black
602394-04	2" adaptor, Black
203070	Register, Plastic, Brown
690429	Round louver, 2", Black
600526	Flange, 4"
600193	2" duct, Thermaflex flexible
600247	4" hose, Heat duct flex

Microwave

690683-01	Microwave w/trim kit, Black, Danby, 23CB, 23FB, 25', 30'
690648-02	Microwave w/turntable, Stainless Steel, Contoure, 25FB, 27FB
*690657-08	Convection microwave, SS, Contoure
*690657-06	Trim kit, SS
690728-01	Microwave-Convec 1.1 CF SS #RV-200s-Con
690728-02	Trim Kit- Micro SS #Tk-200S SS

*Replaced by 690728-01 March 2018

2018 INTERNATIONAL
APPLIANCES

Range and Cooktop

690631-01	Range, 21", Black top, Stainless Steel door
690631-02-UPS	Cooktop, 21” w/3 burners, Black
690631-03	Bi-fold burner cover, Stainless Steel
690631-0201	Burners for range and cooktop
690631-04	Bi-fold cover, Black
690631-100	Hinge kit, Bi-fold cover
690631-0101	Piezo Ignitor For Range 690631
690631-0102	Grate For Burners
512210	Range hood, Baraldi
454590	Extension, Range vent
511017-11	Exterior vent, Gray
115175	Duct, Range exhaust transition

Refrigerator

690540-02	Refrigerator, LH, 5 CF, 23CB
690540-03	Refrigerator, RH, 5 CF, 23FB
690574-01	Refrigerator, LH, 7 CF, 25’, 28’
690574-02	Refrigerator, RH, 7 CF, 25FB, 27FB
690609-01	Refrigerator, LH, 8 CF, 30’
801728-05	Insert, 20.62 x 38.62, 23CB
965934-03	Insert, 20.62 x 38.62, 23FB
965934-05	Insert, Upper, 23.75 x 17, 25FB
965934-06	Insert, Lower, 23.75 x 32.38, 25FB
801728-01	Insert, Upper, 23.75 x 17, 25’, 27FB, 28’
801728-02	Insert, Lower, 23.75 x 32.38, 25’, 27FB, 28’
801728-06	Insert, Upper, 20.62 x 15.81, 30’
801728-07	Insert, Lower, 20.62 x 38.69, 30’
690394	Power ventilator
966811	Refrigerator stand, 23CB
968352	Refrigerator stand, 23FB
968353	Refrigerator stand, 25’
966812	Refrigerator stand, 25FB, 27FB
966808	Refrigerator stand, 28’
967519	Refrigerator stand, 30’

2018 INTERNATIONAL
EXTERIOR SHELL

Front End, 23CB, 23FB

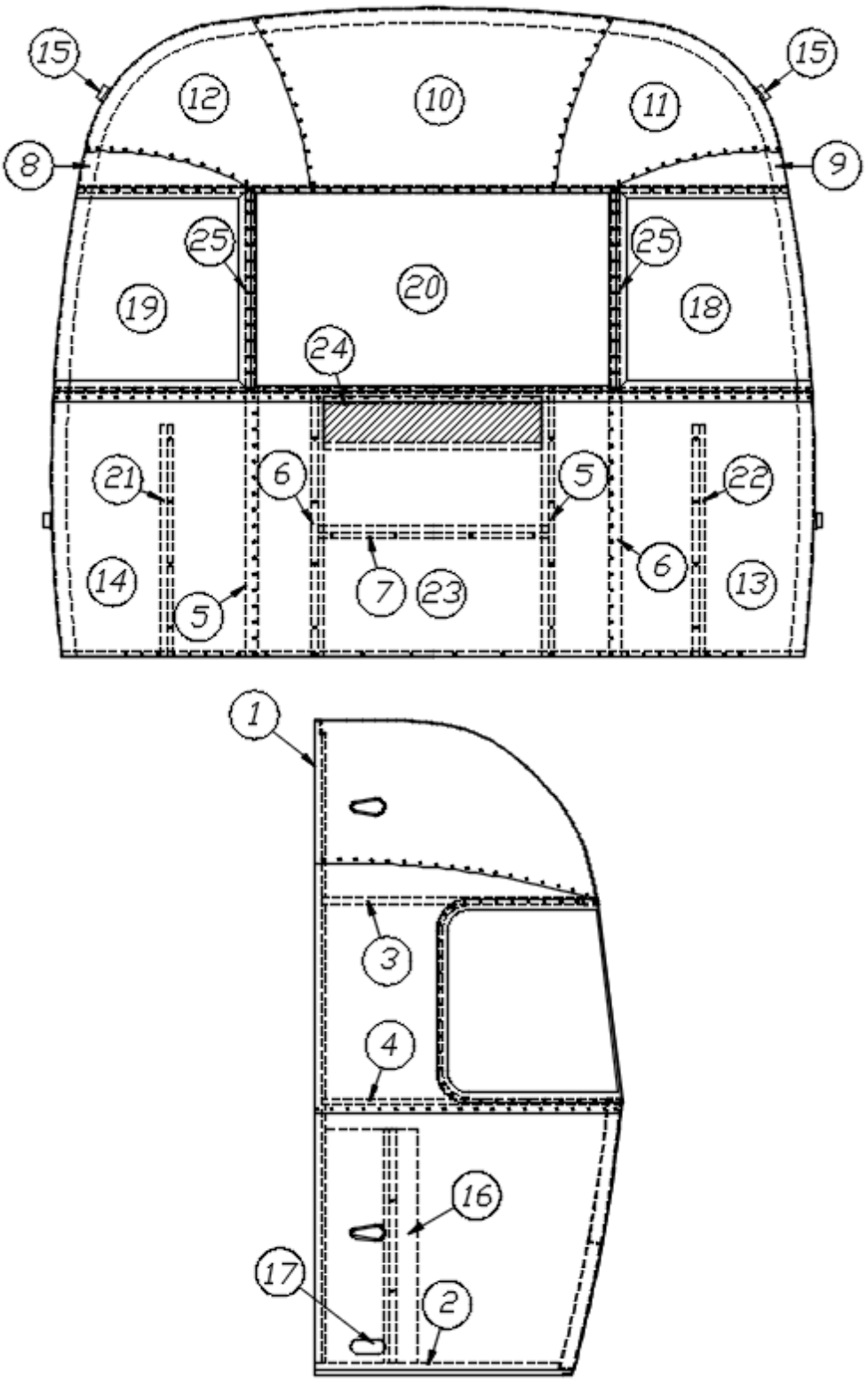

Parts Listed on Next Page

2018 INTERNATIONAL
EXTERIOR SHELL

Front End, 23CB, 23FB

	922626	Front End Shell
1.	114994	Weldment, End bow, NB
2.	104463	Floor bow, Captive extrusion
3.	115480	Upper, Window bow
4.	104343	Lower, Window bow
5.	114505-01	Support, Lower end, LH
6.	114505-02	Support, Lower end, RH
7.	104408	Z-rib
8.	114888	Segment, Center left
9.	114889	Segment, Center right
10.	114892	Segment, #25, NB
11.	114890	Segment, #26
12.	114891	Segment, #27
13.	114894	Segment, #28
14.	114895	Segment, #29
15.	512859	LED clearance light, Amber
16.	114849-06	Aluminum sheet, .06” x 36” x 8’, Black
17.	500096	Reflector, Amber
18.	372088-101	Panoramic window, RS front
19.	372089-101	Panoramic window, CS front
20.	371328	Front window, Complete assembly
21.	101315-01	Vertical brace, Rear, LH
22.	101315-02	Vertical brace, Rear, RH
23.	114880-307	Aluminum sheet, .04” x 51” x 307”
24.	453629	Hat section, 27.25” long, Front dinette models only
25.	454910	Support, Wrap window

2018 INTERNATIONAL
EXTERIOR SHELL

Front End, 25’, 28’, 30’

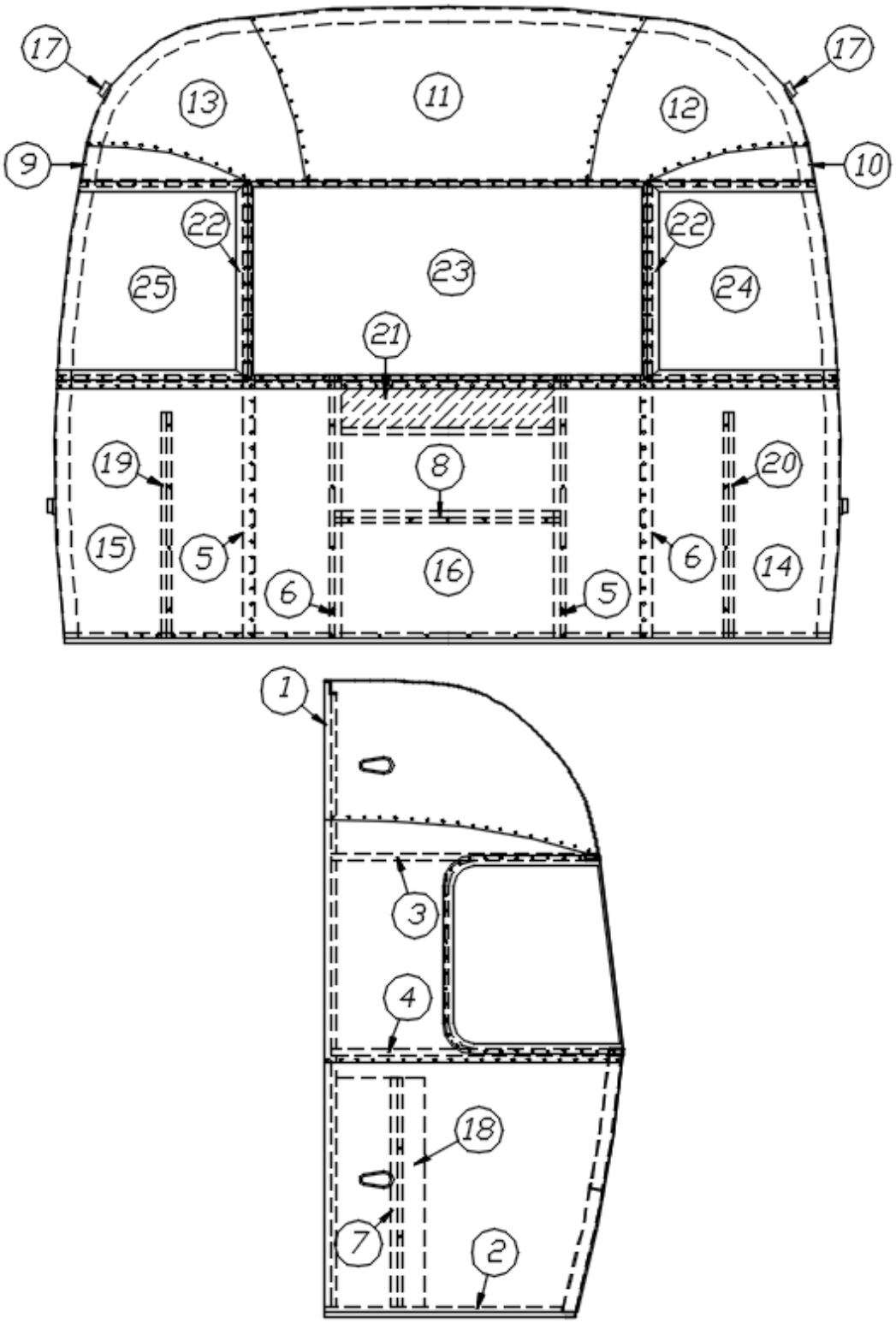

Parts Listed on Next Page

2018 INTERNATIONAL
EXTERIOR SHELL

Front End, 25’, 28’, 30’

922676-01	Front End Shell, 25’
922676	Front End Shell, 28’, 30’

1.	114993	Weldment, Zero bow
2.	114676	Floor bow, Altered
3.	114678	Bow, Upper window, Altered
4.	114677	Bow, Lower window Altered
5.	114505-01	Support, Lower end shell, LH
6.	114505-02	Support, Lower end shell, RH
7.	101315	Brace, Vertical rear
8.	104408	Z-rib
9.	114888	Segment, Center left
10.	114889	Segment, Center right
11.	114893	Segment, #25
12.	114890	Segment, #26
13.	114891	Segment, #27
14.	114894	Segment, #28
15.	114895	Segment, #29
16.	114880-307	Aluminum sheet, .04” x 51” x 307”
17.	512859	LED clearance light, Amber
18.	114849-06	Aluminum sheet, .06” x 36” x 8’, Black
19.	101315-01	Vertical brace, Rear, LH
20.	101315-02	Vertical brace, Rear, RH
21.	453629	Hat section, Dinette table support
22.	454910	Support, Wrap window
23.	371346-02	Window, 48.97”
24.	372088-101	Panoramic window, RS front
25.	372089-101	Panoramic window, CS front

2018 INTERNATIONAL
EXTERIOR SHELL

Front End, 25FB

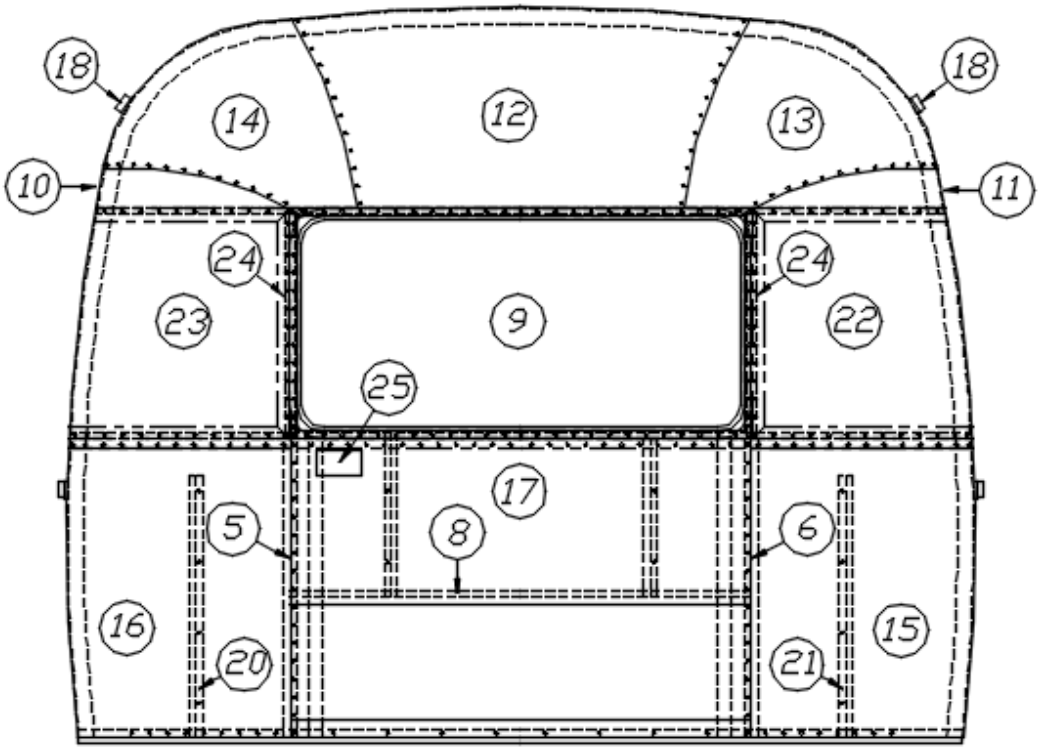

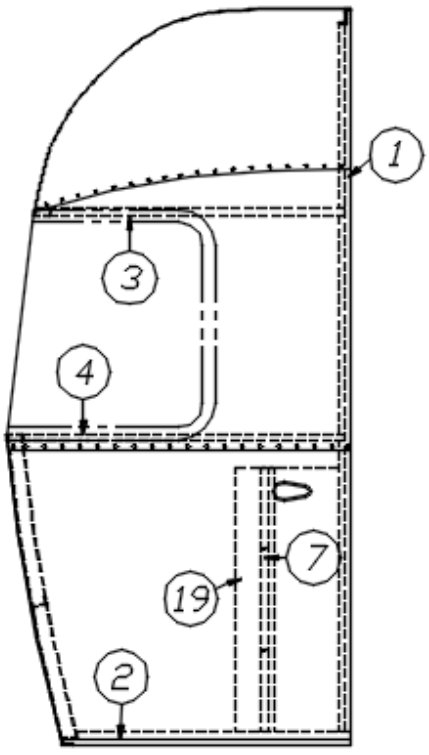

Parts Listed on Next Page

2018 INTERNATIONAL
EXTERIOR SHELL

Front End, 25FB

	921240	Front End Shell
1.	114993	End bow
2.	114676	Floor bow
3.	114678	Upper window bow
4.	114677	Lower window bow
5.	114505-01	Support, Lower end, LH
6.	114505-02	Support, Lower end, RH
7.	101315	Brace, vertical rear
8.	104408	Z-rib
9.	371346-02	Front window
10.	114888	Segment, Center left
11.	114889	Segment, Center right
12.	114893	Segment, #25
13.	114890	Segment, #26
14.	114891	Segment, #27
15.	114894	Segment, #28
16.	114895	Segment, #29
17.	114880-307	Aluminum sheet, .04” x 51” x 307”
18.	512859	LED clearance light, Amber
19.	114849-06	Aluminum sheet, .06” x 36” x 8’, Black
20.	101315-01	Vertical brace, Rear, LH
21.	101315-02	Vertical brace, Rear, RH
22.	372088-101	Panoramic window, RS front
23.	372089-101	Panoramic window, CS front
24.	454910	Support, Wrap window
25.	386118	Label, LP Gas Tri-Warning

2018 INTERNATIONAL
EXTERIOR SHELL

Front End, 27FB

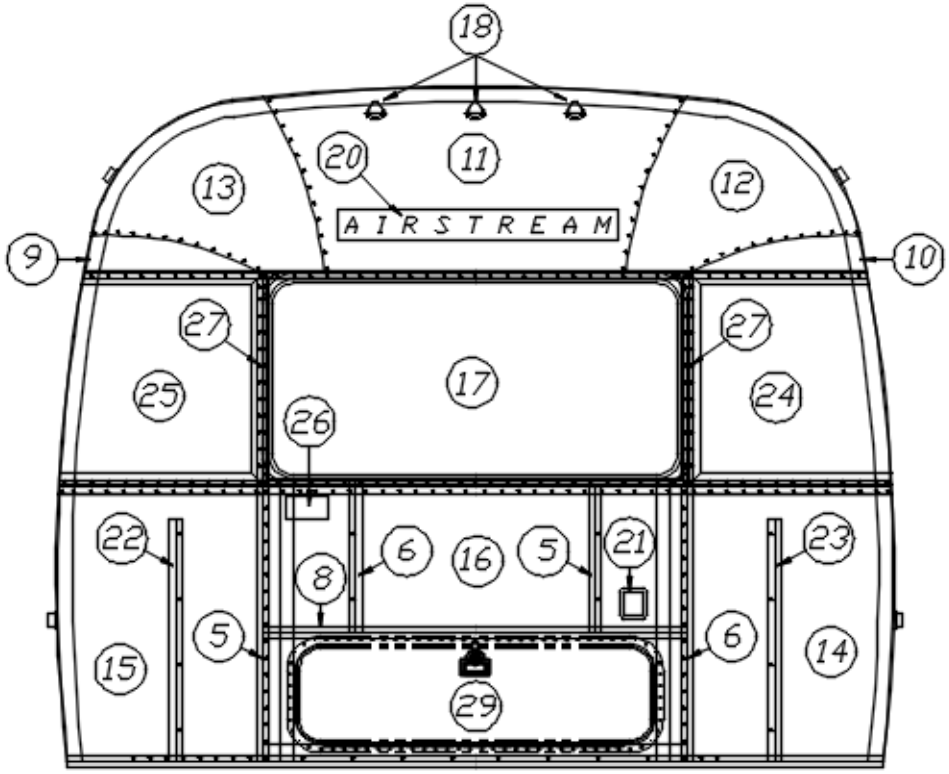

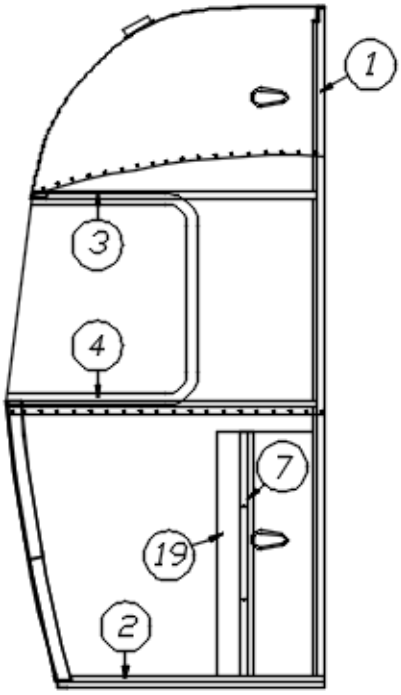

Parts Listed on Next Page

2018 INTERNATIONAL
EXTERIOR SHELL

Front End, 27FB

	921244-01	Front End shell w/Panoramic Windows
1.	114993	Weldment, Zero bow, "WB"
2.	114676	Bow, Floor, Altered
3.	114678	Bow, Upper window, Altered
4.	114677	Bow, Lower window, Altered
5.	114505-01	Support, Lower end, LH
6.	114505-02	Support, Lower end, RH
7.	101315	Vertical brace, Rear
8.	104408	Z-rib
9.	114888	Segment, Center left
10.	114889	Segment, Center right
11.	114893	Segment, #25, WB
12.	114890	Segment, #26
13.	114891	Segment, #27
14.	114894	Segment, #28
15.	114895	Segment, #29
16.	114880-307	Aluminum sheet, .04" x 51" x 307"
17.	371346-02	Window, 49.63” x 24.19”, Silver handles
18.	512859	LED clearance light, Amber
19.	114849-06	Aluminum sheet, .06” x 36” x 8’, Black
20.	386272	Decal, “AIRSTREAM”, Black Chrome
21.	513087-02	Power inlet, Male, 30A, 125V, Gray
22.	101315-01	Vertical brace, LH
23.	101315-02	Vertical brace, RH
24.	372088-101	Panoramic window, RS front
25.	372089-101	Panoramic window, CS front
26.	386118	Label, LP Gas Tri-Warning
27.	454910	Support, Wrap window
28.	922288-02	Trunk door only w/round corners

2018 INTERNATIONAL
EXTERIOR SHELL

Aft End, 23CB

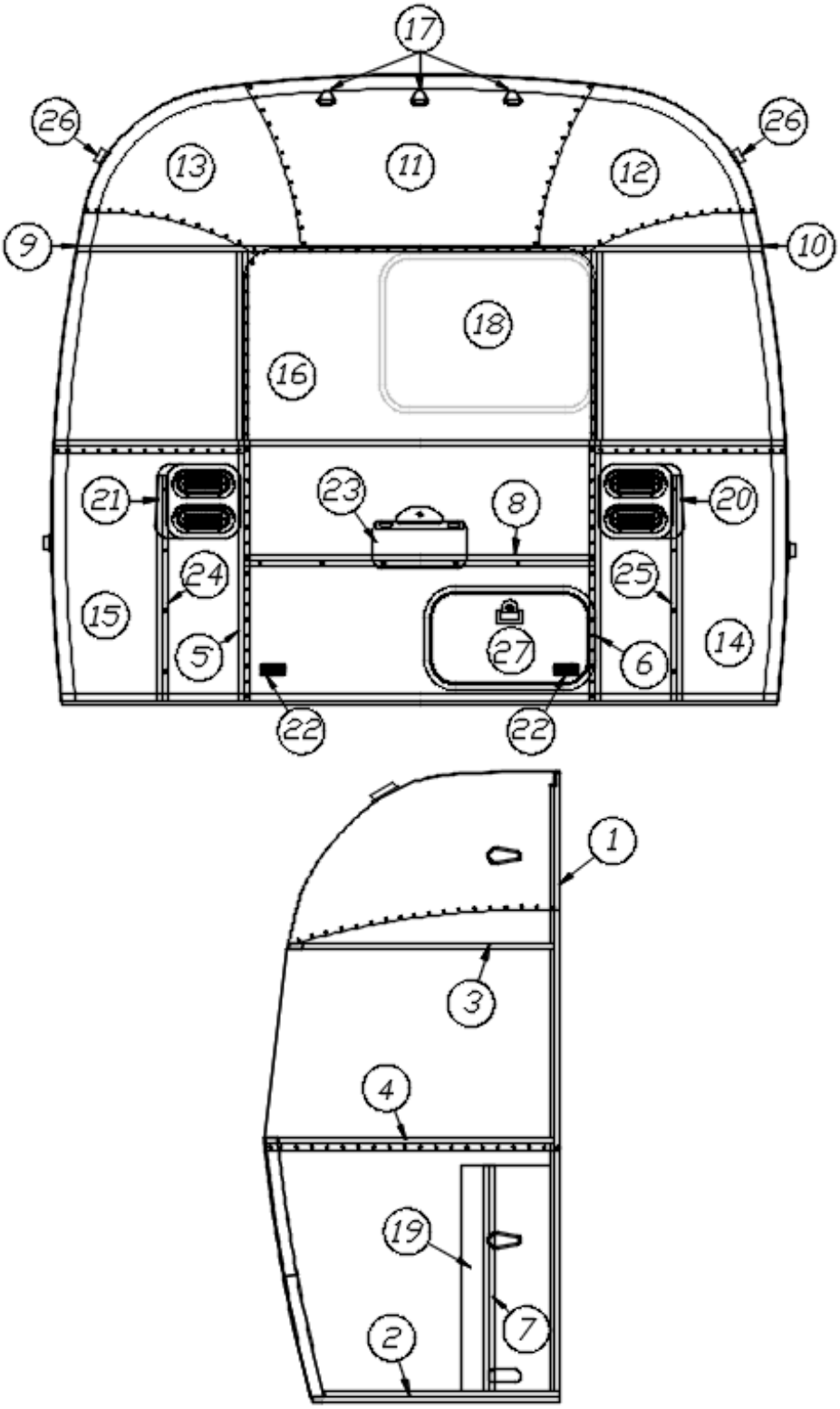

Parts Listed on Next Page

2018 INTERNATIONAL
EXTERIOR SHELL

Aft End, 23CB

964513-08	Aft End Shell

1.	114994	End bow
2.	104463	Floor bow
3.	115480	Upper window bow
4.	104343	Lower window bow
5.	114505-01	Support, Lower end, LH
6.	114505-02	Support, Lower end, RH
7.	101315	Vertical brace, rear
8.	104408	Z-rib
9.	114888	Segment, Center left
10.	114889	Segment, Center right
11.	114892	Segment, #25
12.	114890	Segment, #26
13.	114891	Segment, #27
14.	114894	Segment, #28
15.	114895	Segment, #29
16.	114880-201	Aluminum sheet, .04” x 19” x 51”
17.	512928	Curved bezel w/gasket, Required for 3 top lights
18.	372229	Window, No arms
19.	114849-06	Aluminum sheet, .06” x 36” x 8’, Black
20.	952929-02	Tail light assembly, CS
21.	952929-01	Tail light assembly, RS
22.	510446	Reflector, Stick-on, Red
23.	512409	License plate holder
24.	101315-01	Support, Lower end shell, LH
25.	101315-02	Support, Lower end shell, RH
26.	512860	LED clearance light, Red
27.	100679-01	Door, Side access

2018 INTERNATIONAL
EXTERIOR SHELL

Aft End, 23FB

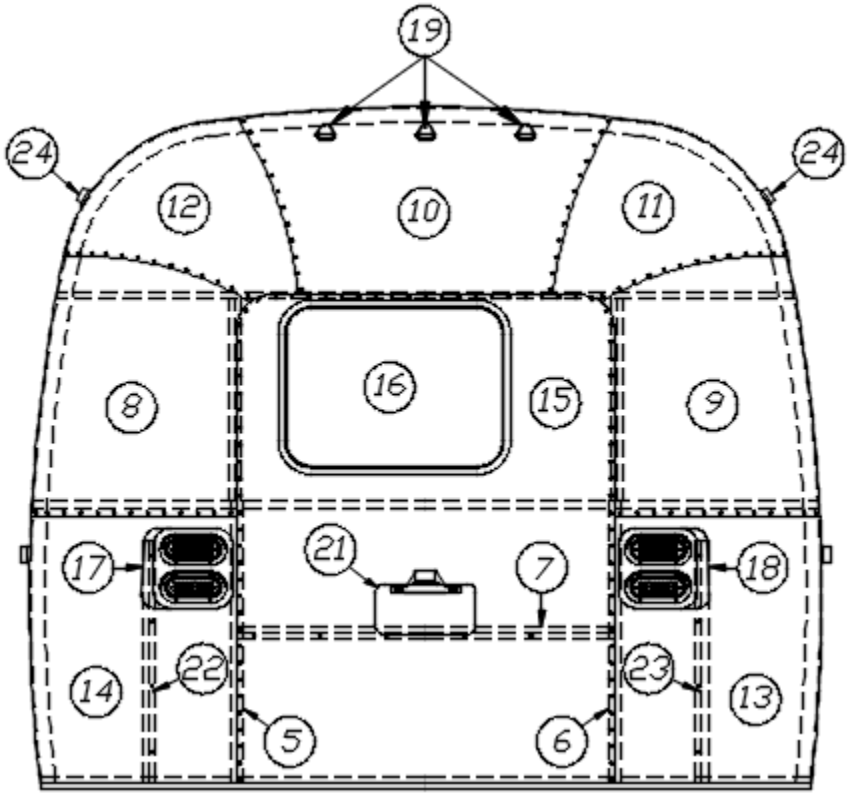

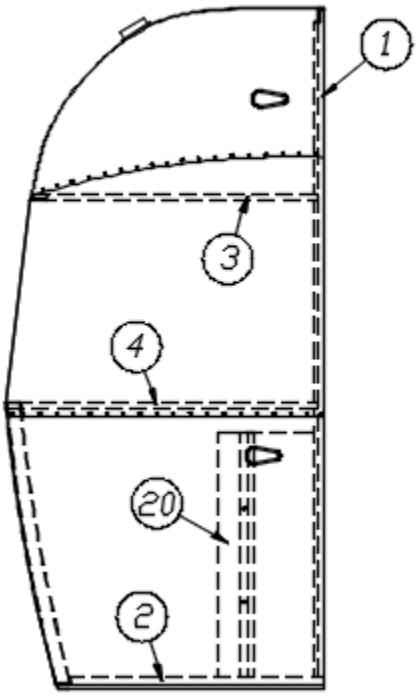

Parts Listed on Next Page

2018 INTERNATIONAL
EXTERIOR SHELL

Aft End, 23FB

	967149-01	Aft End Shell
1.	114994	End bow
2.	104463	Floor bow
3.	115480	Upper window bow
4.	104343	Lower window bow
5.	114505-01	Support, Lower end, LH
6.	114505-02	Support, Lower end, RH
7.	104408	Z-rib
8.	114888	Segment, Center left
9.	114889	Segment, Center right
10.	114892	Segment, #25, NB
11.	114890	Segment, #26
12.	114891	Segment, #27
13.	114894	Segment, #28
14.	114895	Segment, #29
15.	114880-201	Aluminum sheet, 41” x 51”
16.	372218	Window, Rear, 21” x 28”, Opening
17.	952929-01	Tail light assembly, RS
18.	952929-02	Tail light assembly, CS
19.	512928	Curved bezel w/gasket, Required for 3 top lights
20.	114849-06	Aluminum sheet, .06” x 36” x 8’, Black
21.	512409	License plate holder
22.	101315-01	Support, Lower end shell, LH
23.	101315-02	Support, Lower end shell, RH
24.	512860	LED clearance light, Red

2018 INTERNATIONAL
EXTERIOR SHELL

Aft End, 25’

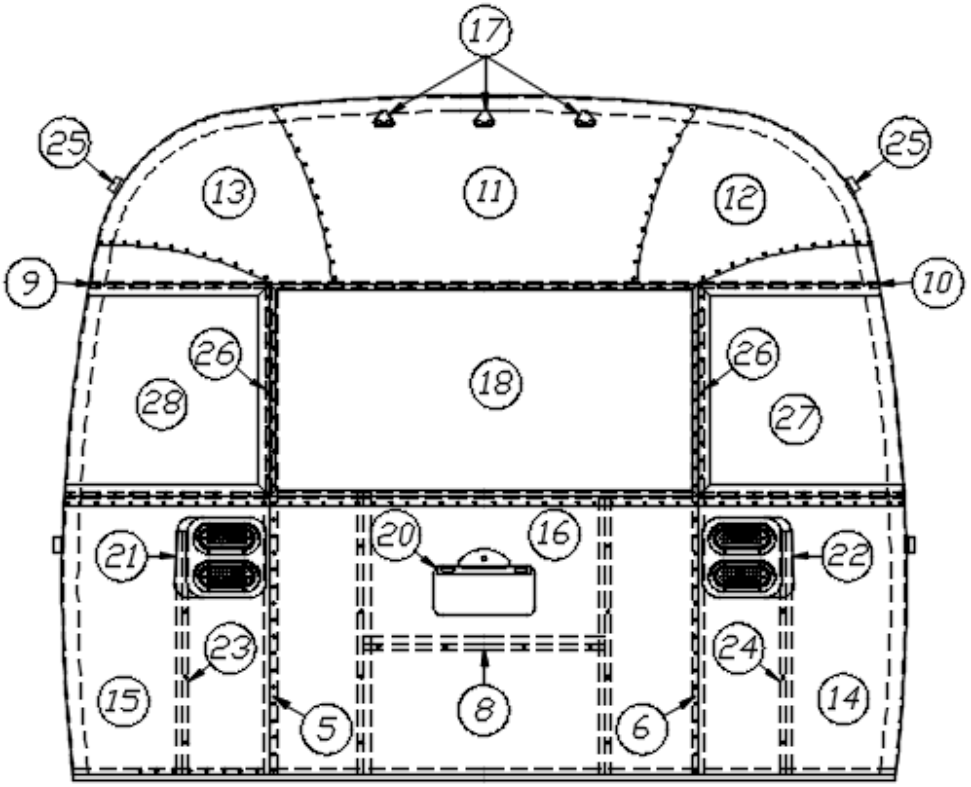

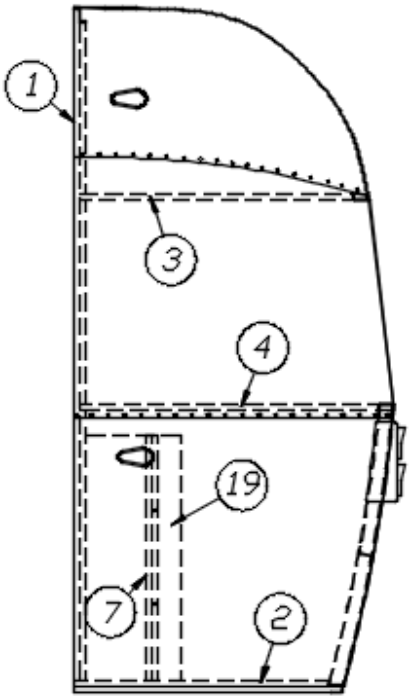

Parts Listed on Next Page

2018 INTERNATIONAL
EXTERIOR SHELL

Aft End, 25’

	922677-01	Aft End Shell
1.	114993	End bow
2.	114676	Floor bow
3.	114678	Upper window bow
4.	114677	Lower window bow
5.	114505-01	Support, Lower end, LH
6.	114505-02	Support, Lower end, RH
7.	101315	Brace, Vertical rear
8.	104408	Z-rib
9.	114888	Segment, Center left
10.	114889	Segment, Center right
11.	114893	Segment, #25
12.	114890	Segment, #26
13.	114891	Segment, #27
14.	114894	Segment, #28
15.	114895	Segment, #29
16.	114880-307	Aluminum sheet, .04” x 51” x 307”
17.	512928	Curved bezel w/gasket, Required for 3 top lights
18.	371346-01	Window, 48.97” flat, Rear egress
19.	114849-06	Aluminum sheet, .06” x 36” x 8’, Black
20.	512409	License plate holder
21.	952929-01	Tail light assembly, RS
22.	952929-02	Tail light assembly, CS
23.	101315-01	Vertical brace, Rear, LH
24.	101315-02	Vertical brace, Rear, RH
25.	512860	LED clearance light, Red
26.	454910	Support, Wrap window
27.	372088-101	Panoramic window, CS rear
28.	372089-101	Panoramic window, RS rear
	100029	Trim, Wrap-around window

2018 INTERNATIONAL
EXTERIOR SHELL

Aft End, 25FB, 27FB

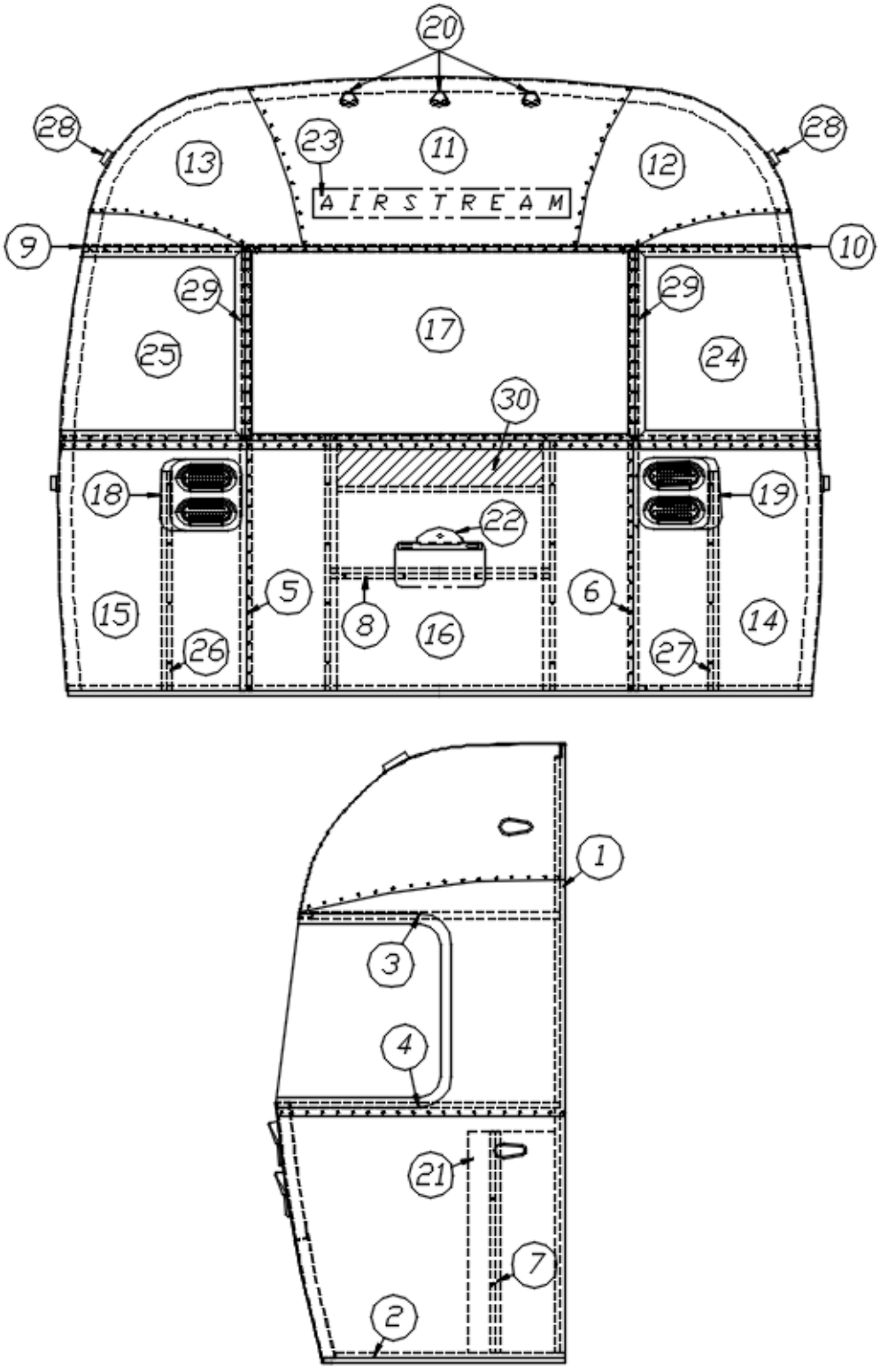

Parts Listed on Next Page

2018 INTERNATIONAL
EXTERIOR SHELL

Aft End, 25FB, 27FB

	921227-02	Aft End Shell
1.	114993	End bow
2.	114676	Floor bow
3.	114678	Upper window bow
4.	114677	Lower window bow
5.	114505-01	Support, Lower end, LH
6.	114505-02	Support, Lower end, RH
7.	101315	Brace, Vertical rear
8.	104408	Extrusion rib
9.	114888	Segment, Center left
10.	114889	Segment, Center right
11.	114893	Segment, #25
12.	114890	Segment, #26
13.	114891	Segment, #27
14.	114894	Segment, #28
15.	114895	Segment, #29
16.	114880-307	Aluminum sheet, .04” x 51” x 307”
17.	371346-02	Window, 48.97" flat front
18.	952929-01	Tail light assembly, Roadside
19.	952929-02	Tail light assembly, Curbside
20.	512928	Curved bezel w/gasket, Required for 3 top lights
21.	114849-06	Aluminum sheet, .06” x 36” x 8’, Black
22.	512409	License plate holder
23.	386272	Decal, “AIRSTREAM”, Black Chrome
24.	372088-101	Panoramic window, CS rear
25.	372089-101	Panoramic window, RS rear
26.	101315-01	Support, Lower end shell, LH
27.	101315-02	Support, Lower end shell, RH
28.	512860	LED clearance light, Red
29.	454910	Support, Wrap window
30.	453629	Hat section, Table support

2018 INTERNATIONAL
EXTERIOR SHELL

Aft End, 28’, 30’

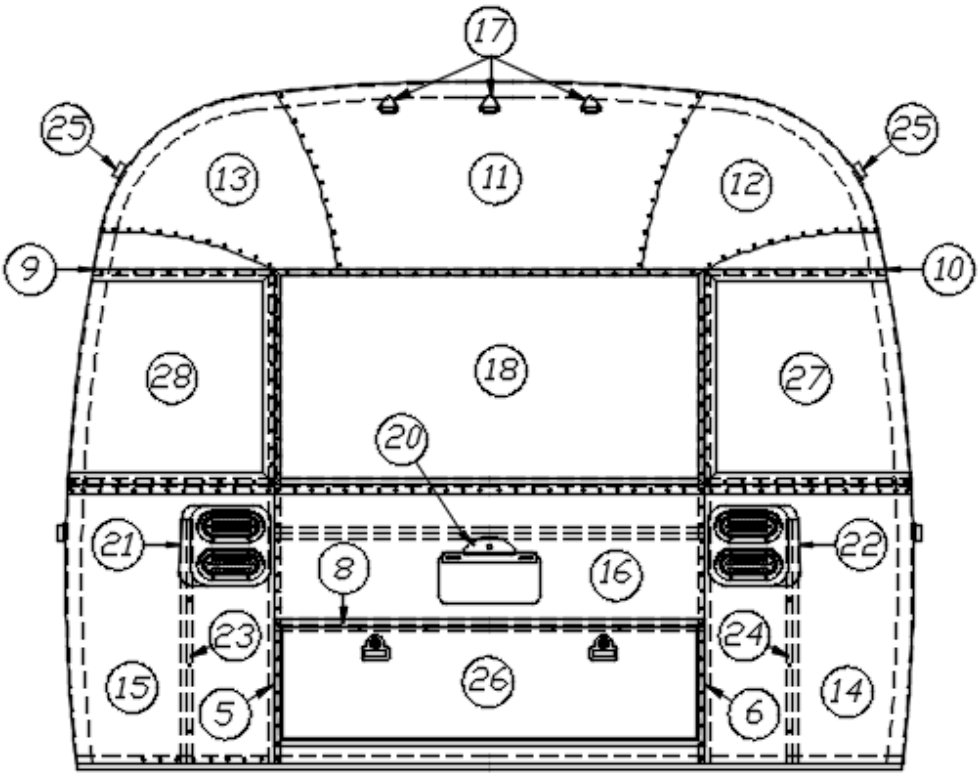

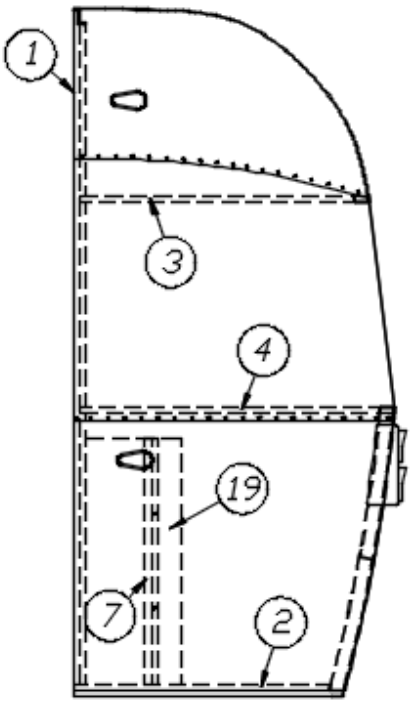

Parts Listed on Next Page

2018 INTERNATIONAL
EXTERIOR SHELL

Aft End, 28’, 30’

	922677	Aft End Shell
1.	114993	End bow
2.	114676	Floor bow
3.	114678	Upper window bow
4.	114677	Lower window bow
5.	114505-01	Support, Lower end, LH
6.	114505-02	Support, Lower end, RH
7.	101315	Brace, Vertical rear
8.	104408	Z-rib
9.	114888	Segment, Center left
10.	114889	Segment, Center right
11.	114893	Segment, #25
12.	114890	Segment, #26
13.	114891	Segment, #27
14.	114894	Segment, #28
15.	114895	Segment, #29
16.	114880-307	Aluminum sheet, .04” x 51” x 307”
17.	512928	Curved bezel w/gasket, Required for 3 top lights
18.	371348-02	Window, Rear w/Red handles
19.	114849-06	Aluminum sheet, .06” x 36” x 8’, Black
20.	512409	License plate holder
21.	952929-01	Tail light assembly, Roadside
22.	952929-02	Tail light assembly, Curbside
23.	101315-01	Vertical brace, Rear, LH
24.	101315-02	Vertical brace, Rear, RH
25.	512860	LED clearance light, Red
26.	921159	Trunk door assembly
27.	372088-101	Panoramic window, CS rear
28.	372089-101	Panoramic window, RS rear

2018 INTERNATIONAL
EXTERIOR SHELL

Aft End, Twin Bedroom, 25’, 25FB, 28’, 30’

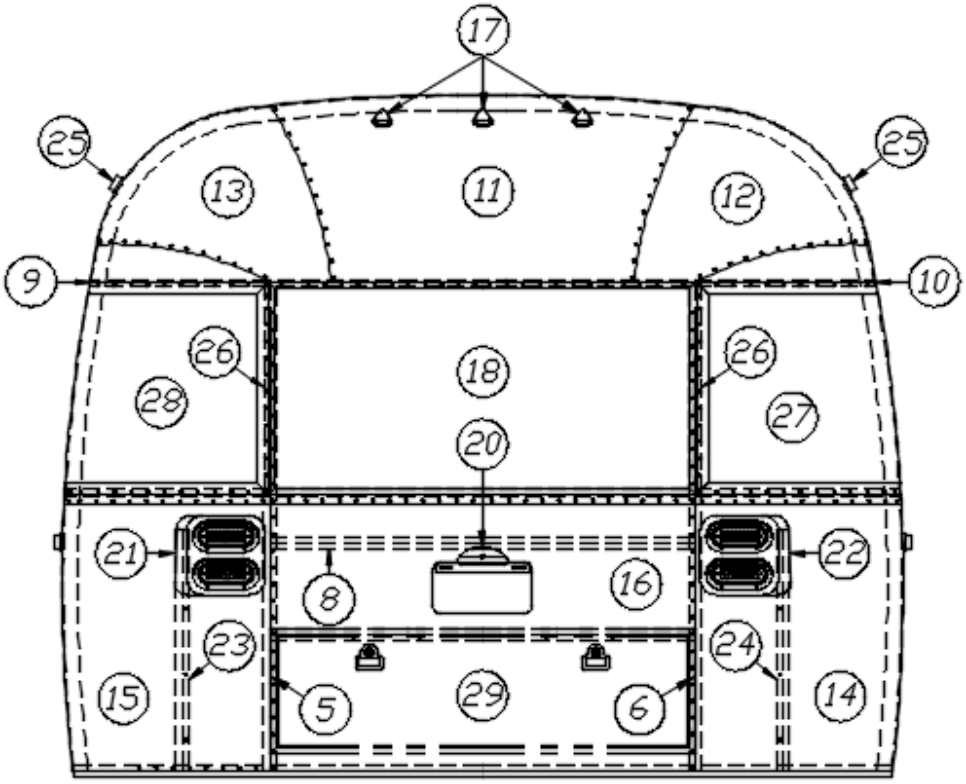

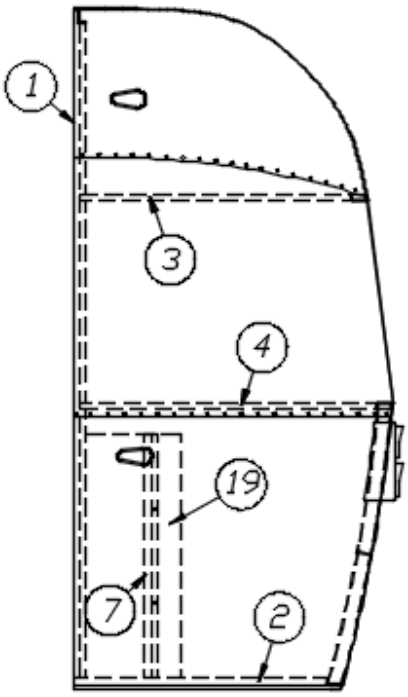

Parts Listed on Next Page

2018 INTERNATIONAL
EXTERIOR SHELL

Aft End, Twin Bedroom, 25’, 25FB, 28’, 30’

	922677-02	Aft End Shell
1.	114993	End bow
2.	114676	Floor bow
3.	114678	Upper window bow
4.	114677	Lower window bow
5.	114505-01	Support, Lower end, LH
6.	114505-02	Support, Lower end, RH
7.	101315	Brace, Vertical rear
8.	104408	Z-rib
9.	114888	Segment, Center left
10.	114889	Segment, Center right
11.	114893	Segment, #25
12.	114890	Segment, #26
13.	114891	Segment, #27
14.	114894	Segment, #28
15.	114895	Segment, #29
16.	114880-307	Aluminum sheet, .04” x 51” x 307”
17.	512928	Curved bezel w/gasket, Required for 3 top lights
18.	371346-01	Window, 48.97” flat, Rear egress
19.	114849-06	Aluminum sheet, .06” x 36” x 8’, Black
20.	512409	License plate holder
21.	952929-01	Tail light, RS
22.	952929-02	Tail light, CS
23.	101315-01	Vertical brace, Rear, LH
24.	101315-02	Vertical brace, Rear, RH
25.	512860	LED clearance light, Red
26.	454910	Support, Wrap window
27.	372088-101	Panoramic window, CS rear
28.	372089-101	Panoramic window, RS rear
29.	921159	Trunk door assembly
	100029	Trim, Wrap around window

2018 INTERNATIONAL
EXTERIOR SHELL

Wall, Roadside, 23CB

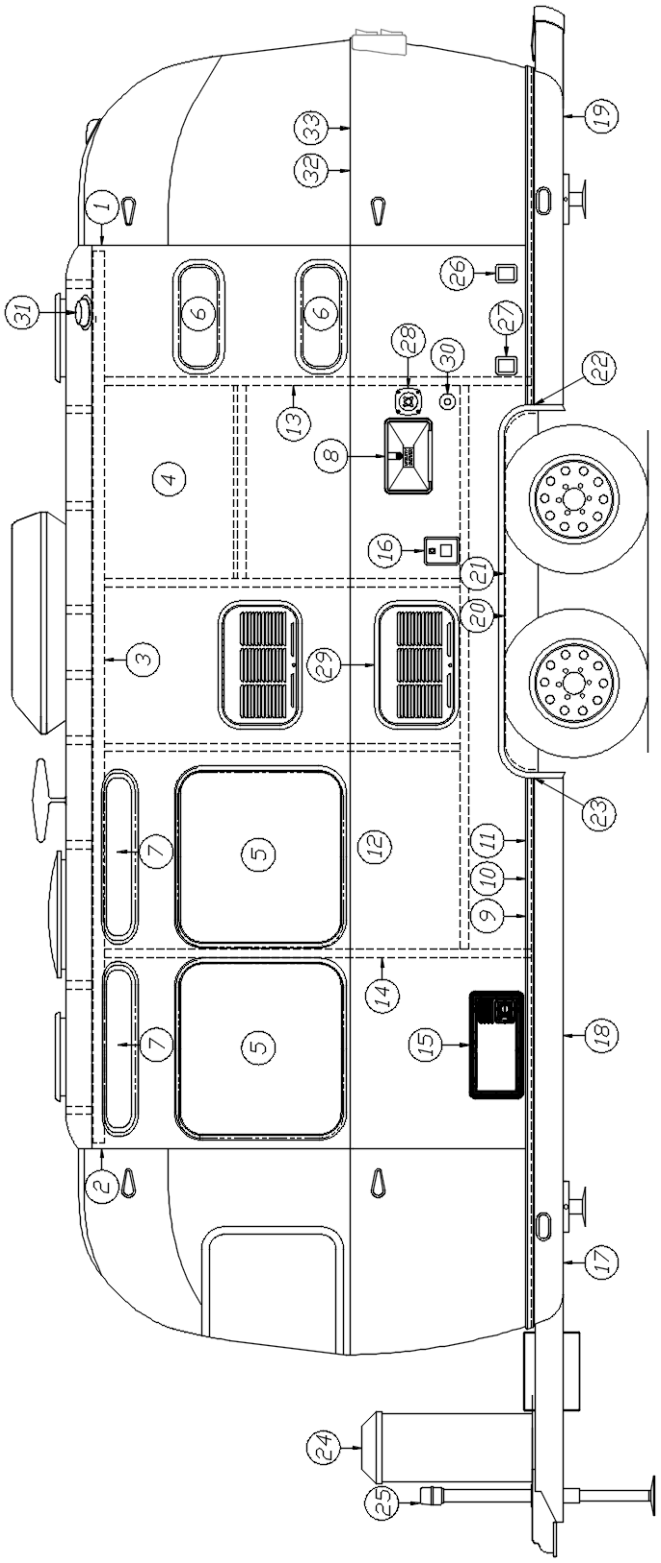

Parts Listed on Next Page

2018 INTERNATIONAL
EXTERIOR SHELL

Wall, Roadside, 23CB

	923238S	Shell Assembly
1.	114290-01	Extrusion, Awning/drip rail
2.	114994	Rib, End bow
3.	104707-01	Extrusion, ”I” beam
4.	114880-201	Aluminum sheet, Upper, .04” x 51” x 201”
5.	371380	Window, 30” tall, Opening
6.	371436	Window, 18” stacked
7.	371437-02	Vista view window, 30"
8.	602326	Exterior shower
9.	115546	Extrusion, Rub rail
10.	201763-100	Insert, Rub rail, 1”, Chrome
11.	100986	Floor channel
12.	114879-201	Aluminum sheet, Lower, .04” x 33” x 201”
13.	114387-01	Bow, Z-rib, RH
14.	114387-02	Bow, Z-rib, LH
15.	690664-05	Furnace exterior door & bezel, Painted Aluminum
16.	601194	Water fill w/lock, Gray
17.	200542-02	Banana wrap, RS front, Black
18.	203304	Roll, Underbelly, Black plastic
19.	200544-02	Banana wrap, RS rear, Black
20.	684936	Wheel well trim, Outer, Dual Axle
21.	684937	Wheel well trim, Inner, Dual Axle
22.	114466-01	Casting, Rub rail, Wheel well, RH
23.	114466-02	Casting, Rub rail, Wheel well, LH
24.	921246-01	LP tank cover, Black
25.	400961-04	Power jack, Atwood
26.	513089	Dual inlet, TV/satellite, Gray
27.	513087-02	Power inlet, Male, 30A, 125V, Gray
28.	601392-06	City water hook-up w/regulator, Chrome
29.	923115	Refrigerator access door
30.	601441-02	Black tank flush
31.	690266-06	Power ventilator w/o garnish
32.	114328	Extrusion, Belt line molding
33.	201912-100	Molding, Belt line insert, Chrome

2018 INTERNATIONAL
EXTERIOR SHELL

Wall, Curbside, 23CB

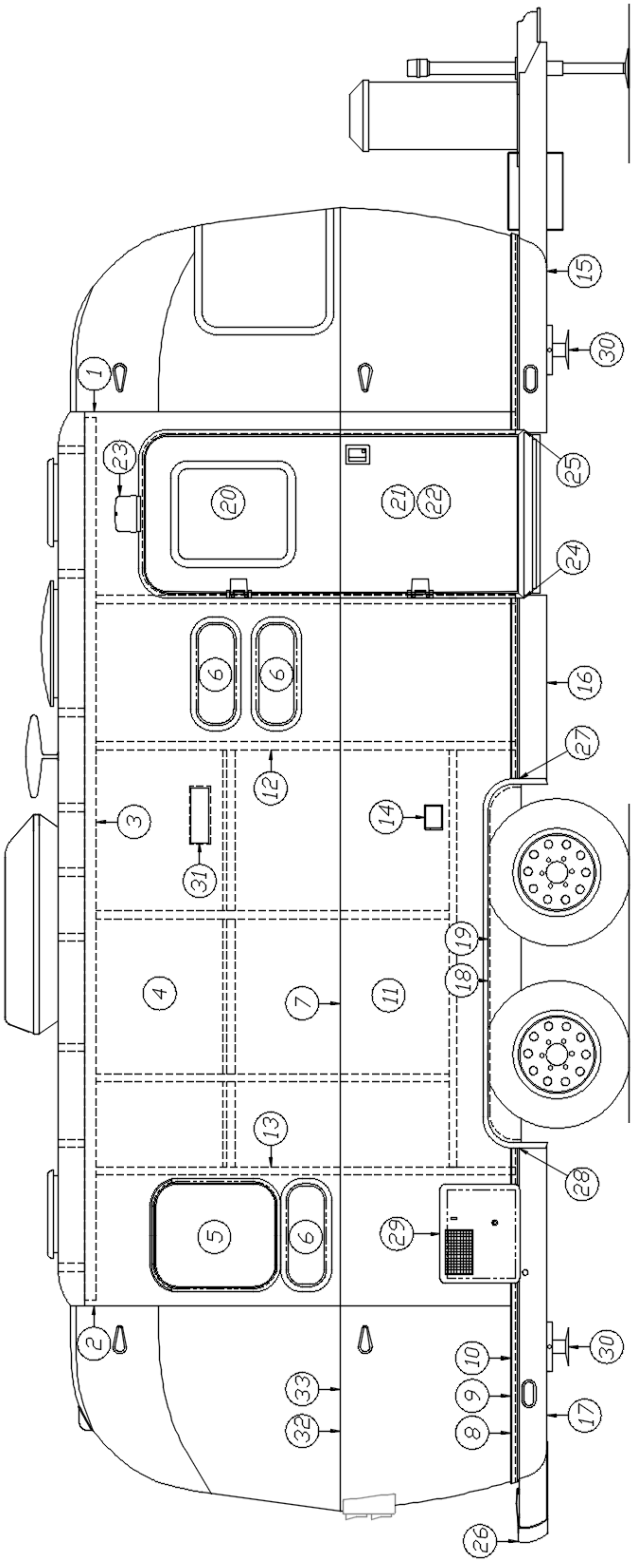

Parts Listed on Next Page

2018 INTERNATIONAL
EXTERIOR SHELL

Wall, Curbside, 23CB

	923238S	Shell Assembly
1.	114290-01	Extrusion, Awning/drip rail
2.	114994	Rib, End bow
3.	104707-01	Extrusion, ”I” beam
4.	114880-201	Aluminum sheet, Upper, .04” x 51” x 201”
5.	371323-01	Window, 18”, Opening
6.	371436	Window, 18” stacked
7.	100034	Z-bar, 48”
8.	115546	Extrusion, Rub rail
9.	201763-100	Insert, Rub rail, 1”, Chrome
10.	100986	Floor channel
11.	114879-201	Aluminum sheet, Lower, .04” x 33” x 201”
12.	114387-01	Bow, Z-rib, RH
13.	114387-02	Bow, Z-rib, LH
14.	512741	Water proof cover w/gasket, Gray
15.	200543-02	Banana wrap, CS front, Black
16.	203304	Roll, Underbelly, Black plastic
17.	200545-02	Banana wrap, CS rear, Black
18.	684936	Wheel well trim, Outer, Dual axle
19.	684937	Wheel well trim, Inner, Dual axle
20.	371400-01	Window, Main door
21.	115207	Main door
22.	114654	Screen door
23.	101323	Casting, Main door light
24.	114465-02	Casting, Rub rail, Door, LH
25.	114465-01	Casting, Rub rail, Door, RH
26.	411055	Bumper
27.	114466-01	Casting, Rub rail, Wheel well, RH
28.	114466-02	Casting, Rub rail, Wheel well, LH
29.	690209	Water heater access cover, Brushed Aluminum
30.	401027-01	Stabilizer jack, Each
31.	511017-11	Exterior vent, Gray
32.	114328	Extrusion, Belt line molding
33.	201912-100	Molding, Belt line insert, Chrome
	201185	Lens, Main door light

2018 INTERNATIONAL
EXTERIOR SHELL

Wall, Roadside, 23FB

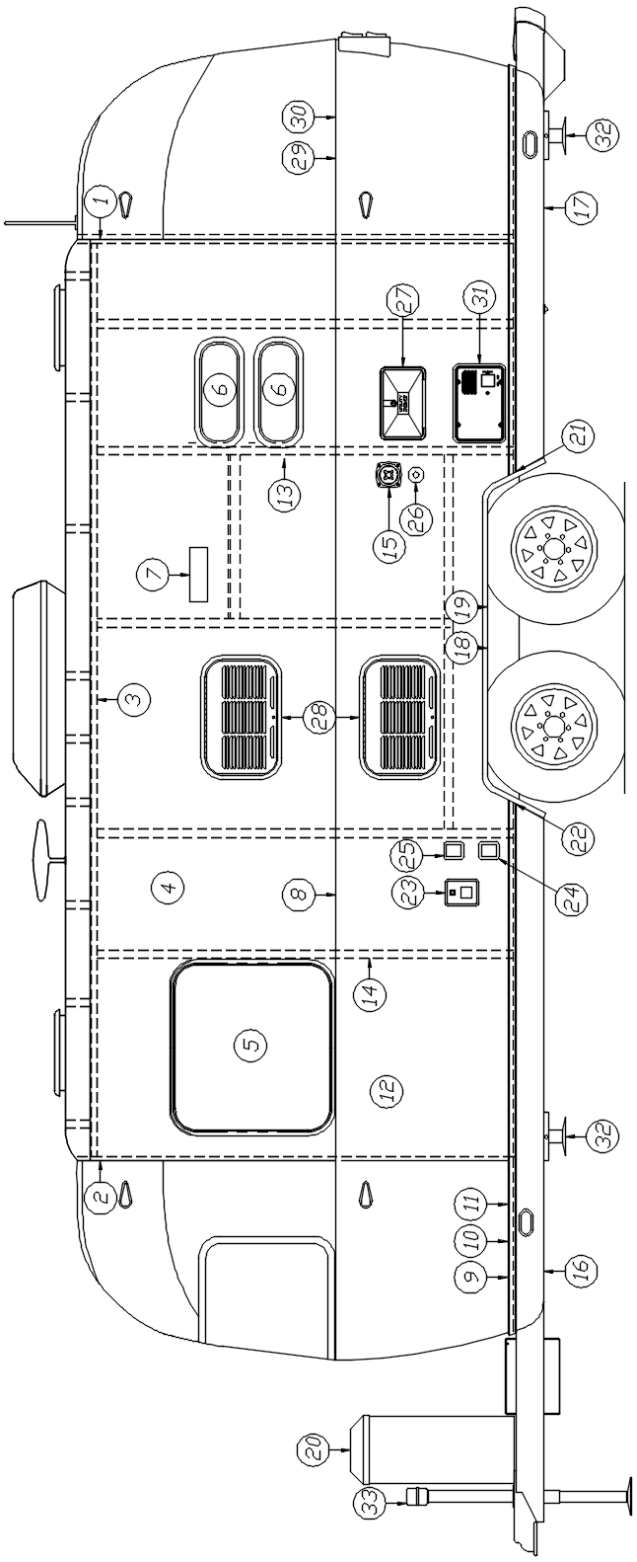

Parts Listed on Next Page

2018 INTERNATIONAL
EXTERIOR SHELL

Wall, Roadside, 23FB

	923242S	Shell Assembly
1.	114290-01	Extrusion, Awning/drip rail
2.	114994	Rib, End bow
3.	104707-01	Extrusion, ”I” beam
4.	114880-201	Aluminum sheet, Upper, .04” x 51” x 201”
5.	371380-01	Window, 30”, Egress
6.	371436	Window, 18" stacked
7.	511017-11	Exterior vent, Gray
8.	100034	Z-bar, 48”
9.	115546	Extrusion, Rub rail
10.	201763-100	Insert, Rub rail, 1”, Chrome
11.	100986	Floor channel
12.	114879-201	Aluminum sheet, Lower, .04” x 33” x 201”
13.	114387-01	Bow, Z-rib, RH
14.	114387-02	Bow, Z-rib, LH
15.	601392-06	City water hook-up w/regulator, Chrome
16.	200542-02	Banana wrap, RS front, Black
17.	200544-02	Banana wrap, RS rear, Black
18.	684936	Wheel well trim, Outer, Dual axle
19.	684937	Wheel well trim, Inner, Dual axle
20.	921246-01	LP tank cover, Black
21.	114466-01	Casting, Rub rail, Wheel well, RH
22.	114466-02	Casting, Rub rail, Wheel well, LH
23.	601194	Water fill w/lock, Gray
24.	513087-02	Power inlet, Male, 30A, 125V, Gray
25.	513089	Dual inlet, TV/satellite, Gray
26.	601441-02	Black tank flush
27.	602326	Exterior shower
28.	923115	Refrigerator access door
29.	114328	Extrusion, Belt line molding
30.	201912-100	Molding, Belt line insert, Chrome
31.	690663-06	Furnace exterior door & bezel, Painted Aluminum
32.	401027-01	Stabilizer jack, Each
33.	400961-04	Power jack, Atwood

2018 INTERNATIONAL
EXTERIOR SHELL

Wall, Curbside, 23FB

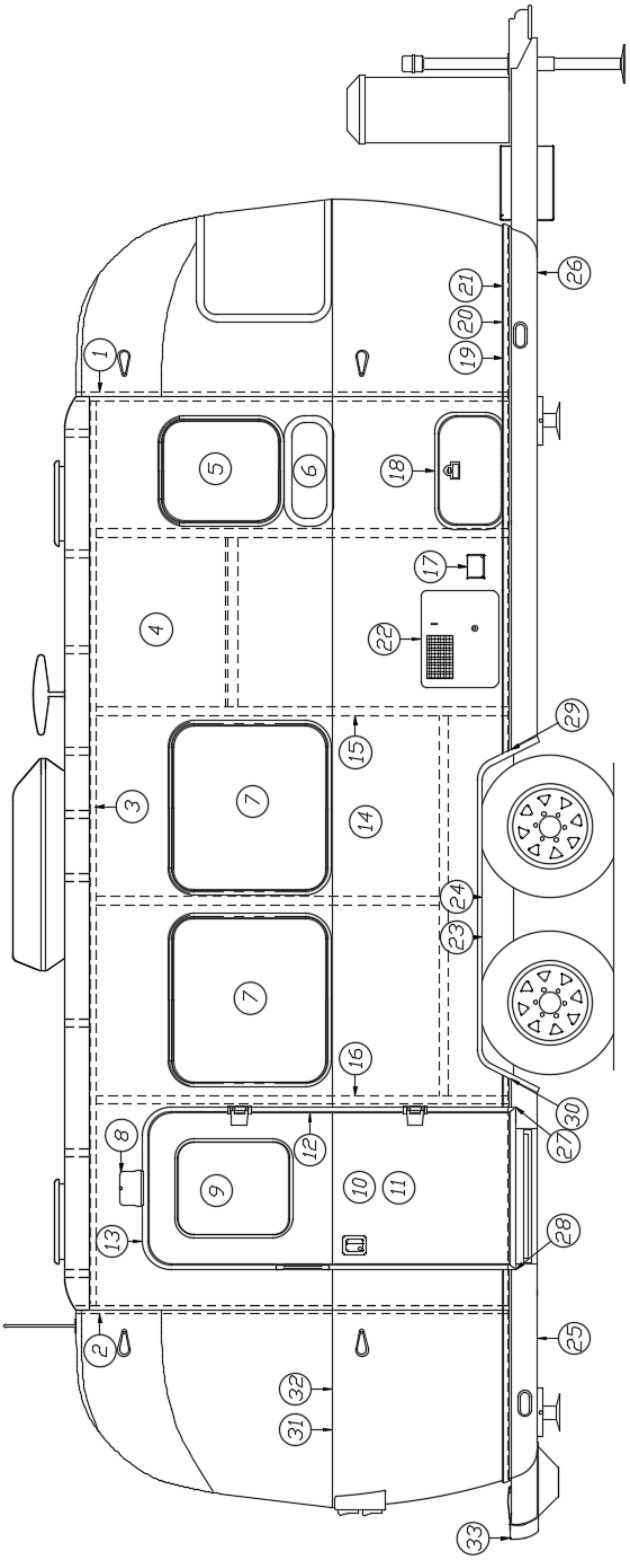

Parts Listed on Next Page

2018 INTERNATIONAL
EXTERIOR SHELL

Wall, Curbside, 23FB

	923242S	Shell Assembly
1.	114290-01	Extrusion, Awning/drip rail
2.	114994	Rib, End bow
3.	104707-01	Extrusion, ”I” beam
4.	114880-201	Aluminum sheet, Upper, .04” x 51” x 201”
5.	371323-01	Window, 18”, Opening
6.	371436	Window 18" stacked
7.	371380	Window, 30” tall, Opening
8.	101323	Casting, Main door light
9.	371400-01	Window, Main door
10.	115207-05	Main door
11.	114654-01	Screen door
12.	114652-01	Jamb, Main door
13.	114363	Drip cap, Main door
14.	114879-201	Aluminum sheet, Lower, .04” x 33” x 201”
15.	114387-01	Bow, Z-rib, RH
16.	114387-02	Bow, Z-rib, LH
17.	512741	Water proof cover w/gasket, Gray
18.	100679-01	Side access door
19.	115546	Extrusion, Rub rail
20.	201763-100	Insert, Rub rail, 1”, Chrome
21.	100986	Floor channel
22.	690209	Water heater access cover, Brushed Aluminum
23.	684936	Wheel well trim, Outer, Dual axle
24.	684937	Wheel well trim, Inner, Dual axle
25.	200545-02	Banana wrap, CS rear, Black
26.	200543-02	Banana wrap, CS front, Black
27.	114465-01	Casting, Rub rail, Door, RH
28.	114465-02	Casting, Rub rail, Door, LH
29.	114466-01	Casting, Rub rail, Wheel well, RH
30.	114466-02	Casting, Rub rail, Wheel well, LH
31.	114328	Extrusion, Belt line molding
32.	201912-100	Molding, Belt line insert, Chrome
33.	411055	Bumper

2018 INTERNATIONAL
EXTERIOR SHELL

Wall, Roadside, 25’

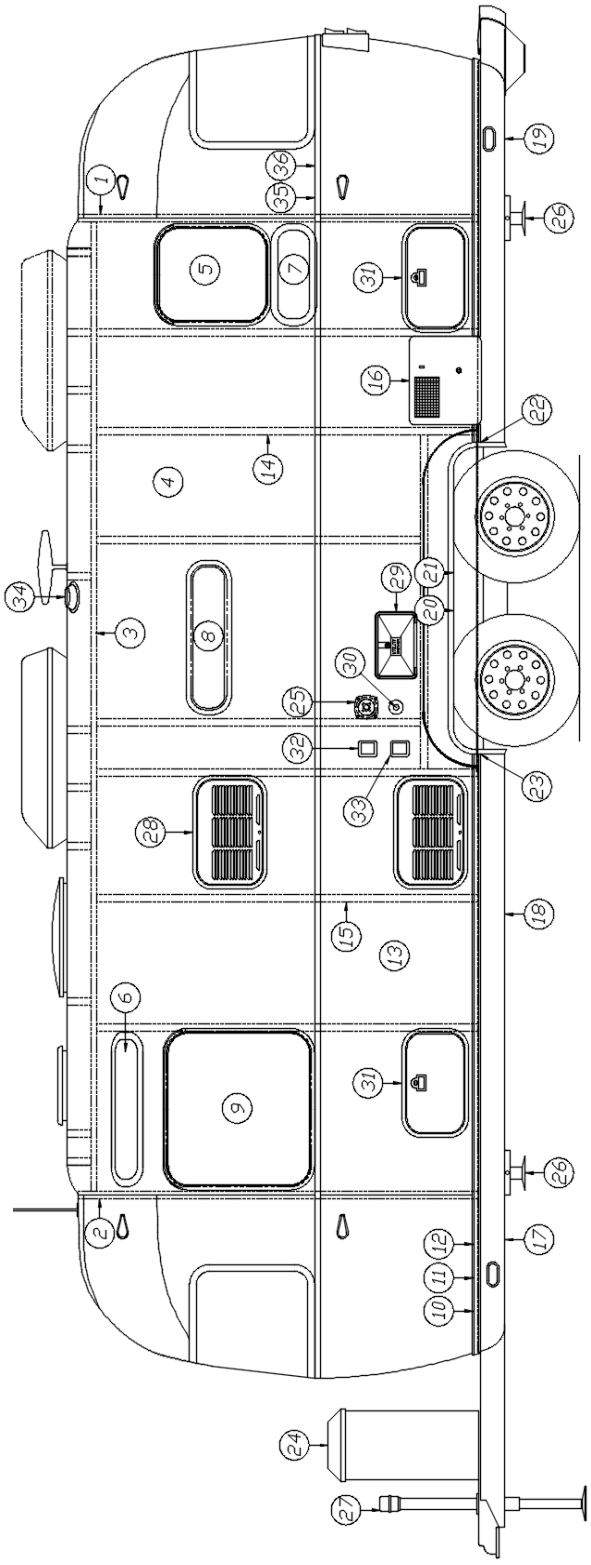

Parts Listed on Next Page

2018 INTERNATIONAL
EXTERIOR SHELL

Wall, Roadside, 25’

	923189S	Shell Assembly
1.	114290-01	Extrusion, Awning/drip rail
2.	114993	Rib, End bow
3.	104707-01	Extrusion, ”I” beam
4.	114880-201	Aluminum sheet, Upper, .04” x 51” x 201”
5.	371323-01	Window, 18”, Opening
6.	371437-02	Vista view window, 30"
7.	371436	Window, 18” stacked
8.	371435	Window, 30” stacked
9.	371380	Window, 30” tall, Opening
10.	115546	Extrusion, Rub rail
11.	201763-100	Insert, Rub rail, 1”, Chrome
12.	100986	Floor channel
13.	114879-201	Aluminum sheet, Lower, .04” x 33” x 201”
14.	114387-01	Bow, Z-rib, RH
15.	114387-02	Bow, Z-rib, LH
16.	690209	Water heater access cover, Brushed Aluminum
17.	200542-02	Banana wrap, RS front, Black
18.	101131-02	Underbelly wrap, .024 x 22.5, Black
19.	200544-02	Banana wrap, RS rear, Black
20.	684936	Wheel well trim, Outer, Dual axle
21.	684937	Wheel well trim, Inner, Dual axle
22.	114466-01	Casting, Rub rail, Wheel well, RH
23.	114466-02	Casting, Rub rail, Wheel well, LH
24.	921246-01	LP tank cover, Black
25.	601392-06	City water hook-up w/regulator, Chrome
26.	401027-01	Stabilizer jack, Each
27.	400961-04	Power jack, Atwood
28.	923115	Refrigerator access door
29.	602326	Exterior shower
30.	601441-02	Black tank flush
31.	100679-01	Side access door
32.	513089	Dual inlet, TV/satellite, Gray
33.	513087-02	Power inlet, Male, 30A, 125V, Gray
34.	690266-06	Power ventilator w/o garnish
35.	114328	Extrusion, Belt line molding
36.	201912-100	Molding, Belt line insert, Chrome

2018 INTERNATIONAL
EXTERIOR SHELL

Wall, Curbside, 25’

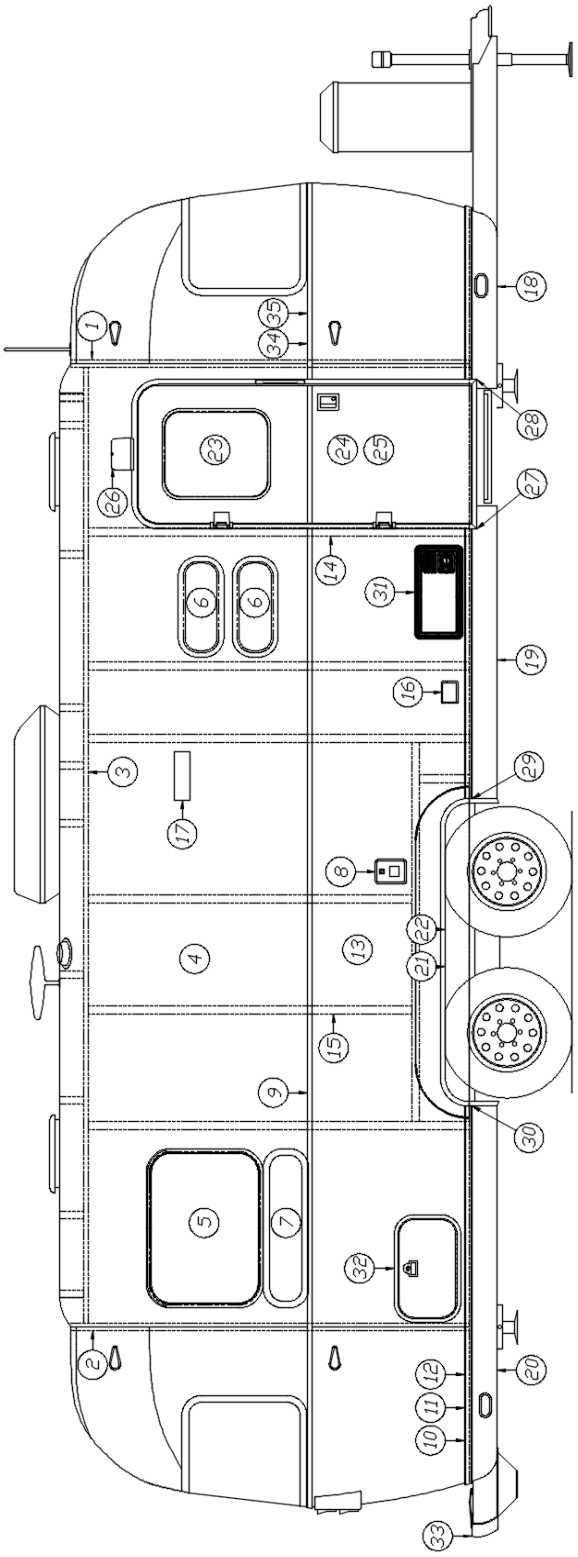

Parts Listed on Next Page

2018 INTERNATIONAL
EXTERIOR SHELL

Wall, Curbside, 25’

	923189S	Shell Assembly
1.	114290-01	Extrusion, Awning/drip rail
2.	114993	Rib, End bow
3.	104707-01	Extrusion “I” beam
4.	114880-201	Aluminum sheet, Upper, .04” x 51” x 201”
5.	371324-02	Window, 30”, Opening
6.	371436	Window, 18” stacked
7.	371435	Window, 30” stacked
8.	601194	Water fill w/lock, Gray
9.	100034	Z-bar 48”
10.	115546	Extrusion, Rub rail
11.	201763-100	Insert, Rub rail, 1”, Chrome
12.	100986	Floor channel
13.	114879-201	Aluminum sheet, Lower, .04” x 33” x 201”
14.	114387-01	Bow, Z-rib, RH
15.	114387-02	Bow, Z-rib, LH
16.	512741	Water proof cover w/gasket, Gray
17.	511017-11	Exterior vent, Gray
18.	200543-02	Banana wrap, CS front, Black
19.	101131-02	Underbelly wrap, .024 x 22.5, Black
20.	200545-02	Banana wrap, CS rear, Black
21.	684936	Wheel well trim, Outer, Dual axle
22.	684937	Wheel well trim, Inner, Dual axle
23.	371400-01	Window, Main door
24.	115207	Main door
25.	114654	Screen door
26.	101323	Casting, Main door light
27.	114465-02	Casting, Rub rail, Door, LH
28.	114465-01	Casting, Rub rail, Door, RH
29.	114466-01	Casting, Rub rail, Wheel well, RH
30.	114466-02	Casting, Rub rail, Wheel well, LH
31.	690664-05	Furnace exterior door & bezel, Painted Aluminum
32.	100679-01	Side access Door
33.	411054	Rear bumper
34.	114328	Extrusion, Belt line molding
35.	201912-100	Molding, Belt line insert, Chrome
	201185	Lens, Main door light

2018 INTERNATIONAL
EXTERIOR SHELL

Wall, Roadside, 25FB

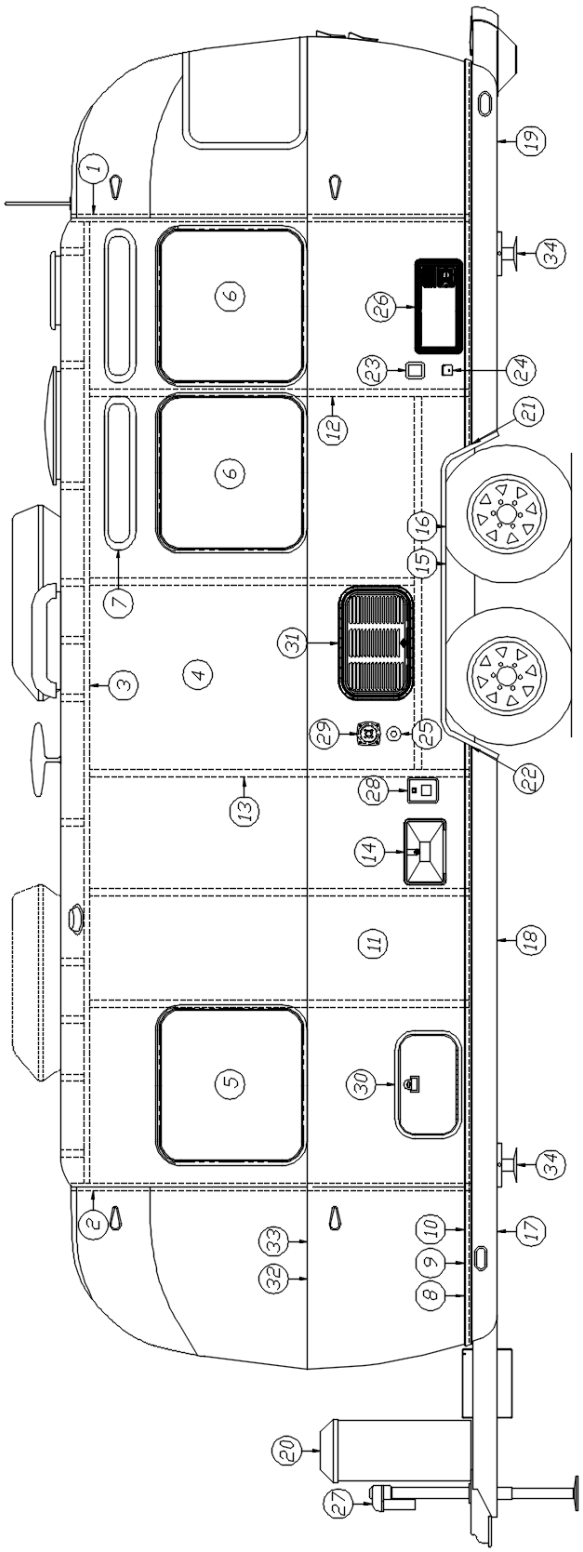

Parts Listed on Next Page

2018 INTERNATIONAL
EXTERIOR SHELL

Wall, Roadside, 25FB

	923195S	Shell Assembly
1.	114290-01	Extrusion, Awning/drip rail
2.	114993	Rib, End bow
3.	104707-01	Extrusion, ”I” beam
4.	114880-201	Aluminum sheet, Upper, .04” x 51” x 201”
5.	371380-01	Window, 30”, Egress
6.	371380	Window, 30” tall, Opening
7.	371437-02	Vista view window, 30"
8.	115546	Extrusion, Rub rail
9.	201763-100	Insert, Rub rail, 1”, Chrome
10.	100986	Floor channel
11.	114879-201	Aluminum sheet, Lower, .04” x 33” x 201”
12.	114387-01	Bow, Z-rib, RH
13.	114387-02	Bow, Z-rib, LH
14.	602326	Exterior shower
15.	684936	Wheel well trim, Outer, Dual axle
16.	684937	Wheel well trim, Inner, Dual axle
17.	200542-02	Banana wrap, RS front, Black
18.	101131-02	Underbelly wrap, .024 x 22.5, Black
19.	200544-02	Banana wrap, RS rear, Black
20.	921246-01	LP tank cover, Black
21.	114466-01	Casting, Rub rail, Wheel well, RH
22.	114466-02	Casting, Rub rail, Wheel well, LH
23.	513089	Dual inlet, TV/satellite, Gray
24.	513087-02	Power inlet, Male, 30A, 125V, Gray
25.	601441-02	Black tank flush
26.	690664-05	Furnace exterior door & bezel, Painted Aluminum
27.	400961-04	Power jack, Atwood
28.	601194	Water fill w/lock, Gray
29.	601392-06	City water hook-up w/regulator, Chrome
30.	100679-01	Side access door
31.	923115	Refrigerator access door
32.	114328	Extrusion, Belt line molding
33.	201912-100	Molding, Belt line insert, Chrome
34.	401027-01	Stabilizer jack, Each

2018 INTERNATIONAL
EXTERIOR SHELL

Wall, Curbside, 25FB

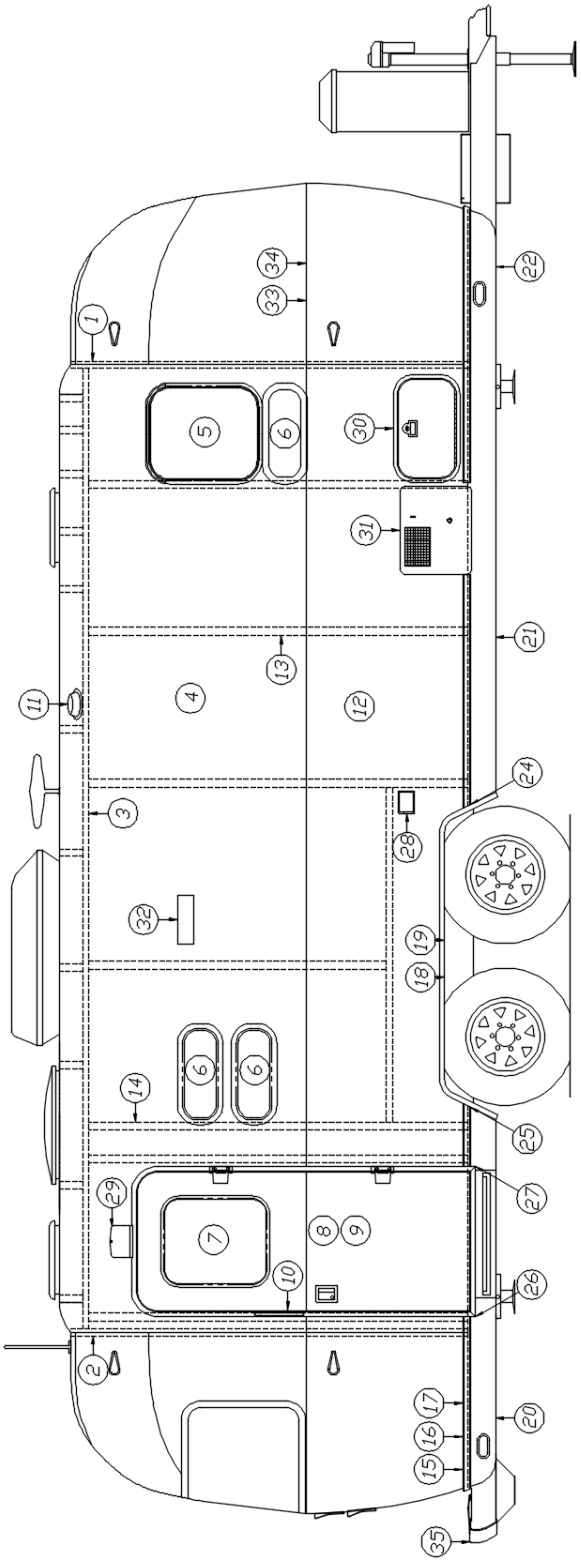

Parts Listed on Next Page

2018 INTERNATIONAL
EXTERIOR SHELL

Wall, Curbside, 25FB

	923195S	Shell Assembly
1.	114290-01	Extrusion, Awning/drip rail
2.	114993	Rib, End bow
3.	104707-01	Extrusion, ”I” beam
4.	114880-201	Aluminum sheet, Upper, .04” x 51” x 201”
5.	371323-01	Window, 18”, Opening
6.	371436	Window, 18" stacked
7.	371400-01	Window, Main door
8.	114654-01	Screen door
9.	115207-05	Main door
10.	114652-01	Jamb, Main door
11.	690266-06	Power ventilator w/o garnish
12.	114879-201	Aluminum sheet, Lower, .04” x 33” x 201”
13.	114387-01	Bow, Z-rib, RH
14.	114387-02	Bow, Z-rib, LH
15.	115546	Extrusion, Rub rail
16.	201763-100	Insert, Rub rail, 1”, Chrome
17.	100986	Floor channel
18.	684936	Wheel well trim, Outer, Dual axle
19.	684937	Wheel well trim, Inner, Dual axle
20.	200545-02	Banana wrap, CS rear, Black
21.	101131-02	Underbelly wrap, .024 x 22.5, Black
22.	200543-02	Banana wrap, CS front, Black
23.	921246-01	LP tank cover, Black
24.	114466-01	Casting, Rub rail, Wheel well, RH
25.	114466-02	Casting, Rub rail, Wheel well, LH
26.	114465-02	Casting, Rub rail, Door, LH
27.	114465-01	Casting, Rub rail, Door, RH
28.	512741	Water proof cover w/gasket, Gray
29.	101323	Casting, Main door light
30.	100679-01	Side access door
31.	690209	Water heater access cover, Brushed Aluminum
32.	511017-11	Exterior vent, Gray
33.	114328	Extrusion, Belt line molding
34.	201912-100	Molding, Belt line, Chrome
35.	411054	Rear bumper

2018 INTERNATIONAL
EXTERIOR SHELL

Wall, Roadside, 27FB

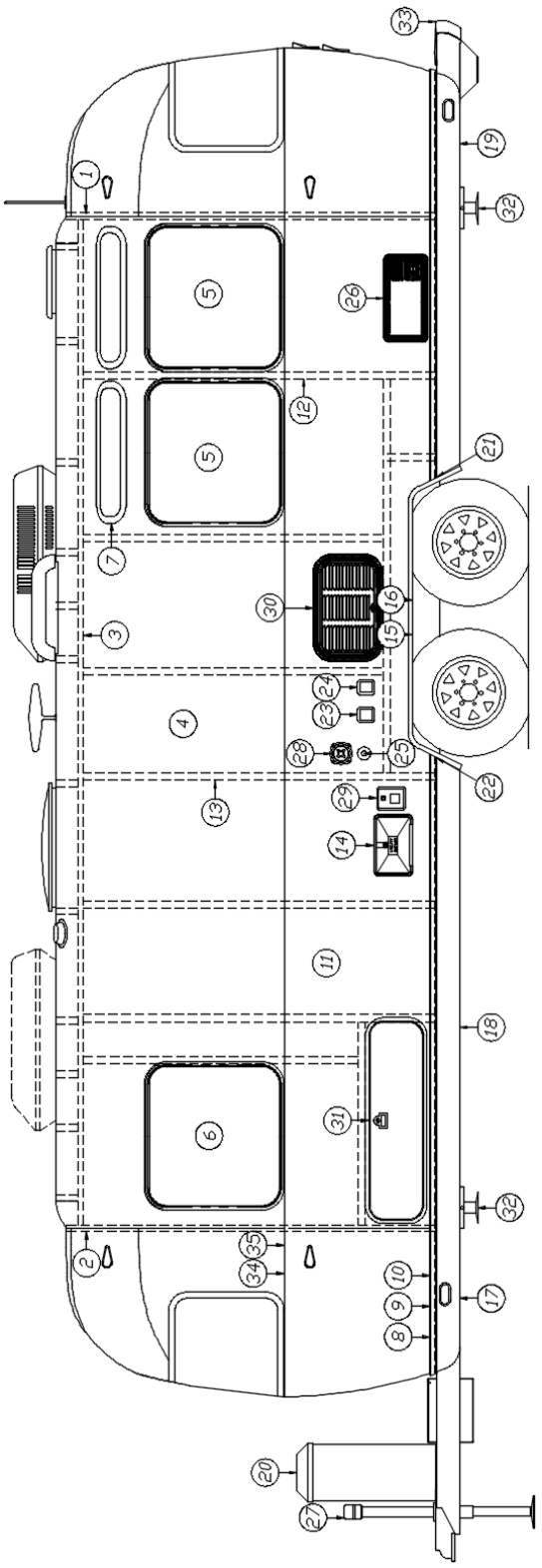

Parts Listed on Next Page

2018 INTERNATIONAL
EXTERIOR SHELL

Wall, Roadside, 27FB

	923185S	Shell Assembly
1.	114290-02	Extrusion, Awning/drip rail
2.	114993	Rib, End bow
3.	104707-01	Extrusion, ”I” beam
4.	114880-238	Aluminum sheet, Upper, .04” x 51” x 238”
5.	371380	Window, 30” tall, Opening
6.	371380-01	Window, 30”, Egress
7.	371437-02	Vista view window, 30"
8.	115546	Extrusion, Rub rail
9.	201763-100	Insert, Rub rail, 1”, Chrome
10.	100986	Floor channel
11.	114879-238	Aluminum sheet, Lower, .04” x 33” x 238”
12.	114387-01	Bow, Z-rib, RH
13.	114387-02	Bow, Z-rib, LH
14.	602326	Exterior shower
15.	684936	Wheel well trim, Outer, Dual axle
16.	684937	Wheel well trim, Inner, Dual axle
17.	200542-02	Banana wrap, RS front, Black
18.	101131-02	Underbelly wrap, .024 x 22.5, Black
19.	200544-02	Banana wrap, RS rear, Black
20.	921246-01	LP tank cover, Black
21.	114466-01	Casting, Rub rail, Wheel well, RH
22.	114466-02	Casting, Rub rail, Wheel well, LH
23.	513089	Dual inlet, TV/satellite, Gray
24.	513087-02	Power inlet, Male, 30A, 125V, Gray
25.	601441-02	Black tank flush
26.	690664-05	Furnace exterior door & bezel, Painted Aluminum
27.	400961-04	Power jack, Atwood
28.	601392-06	City water hook-up w/regulator, Chrome
29.	601194	Water fill w/lock, Gray
30.	923115	Refrigerator access door
31.	922288	Access door
32.	401027-01	Stabilizer jack, Each
33.	411054	Rear bumper
34.	114328	Extrusion, Belt line molding
35.	201912-100	Molding, Belt line insert, Chrome

2018 INTERNATIONAL
EXTERIOR SHELL

Wall, Curbside, 27FB

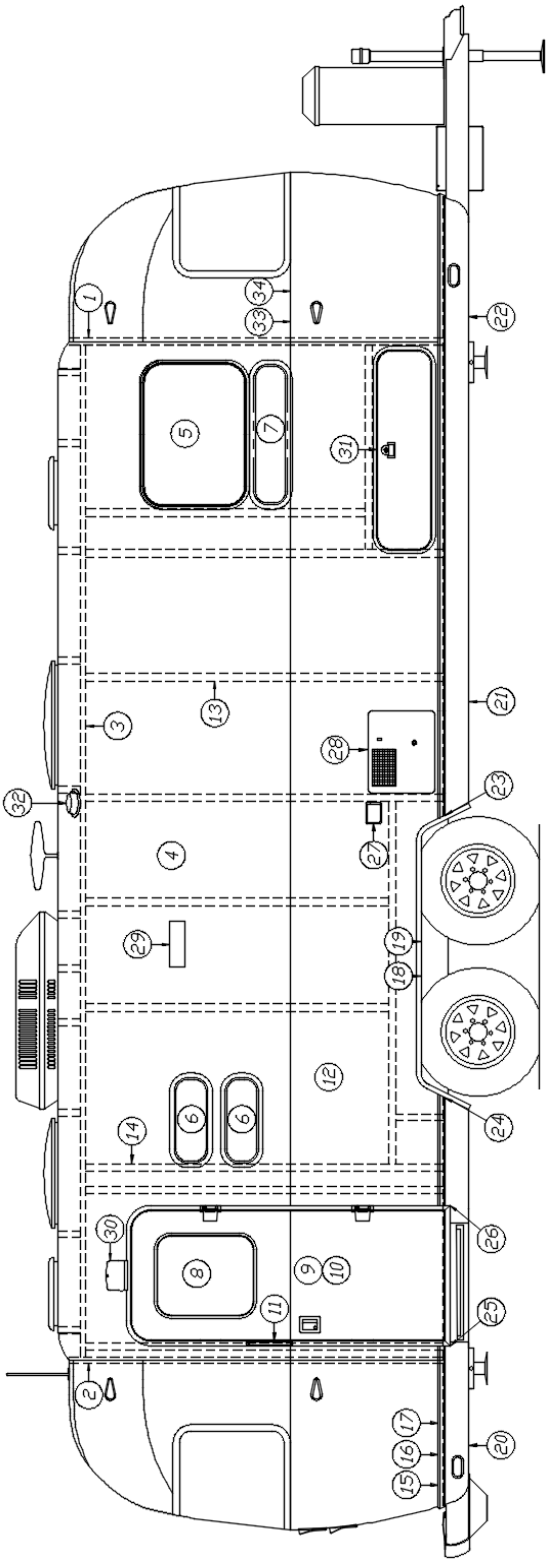

Parts Listed on Next Page

2018 INTERNATIONAL
EXTERIOR SHELL

Wall, Curbside, 27FB

	923185S	Shell Assembly
1.	114290-02	Extrusion, Awning/drip rail
2.	114993	Rib, End bow
3.	104707-01	Extrusion, ”I” beam
4.	114880-238	Aluminum sheet, Upper, .04” x 51” x 238”
5.	371324-02	Window, 30”, Opening
6.	371436	Window, 18" stacked
7.	371435	Window, 30" stacked
8.	371400-01	Window, Main door
9.	115207-05	Main door
10.	114654-01	Screen door
11.	114652-01	Jamb, Main door
12.	114879-238	Aluminum sheet, Lower, .04” x 33” x 238”
13.	114387-01	Bow, Z-rib, RH
14.	114387-02	Bow, Z-rib, LH
15.	115546	Extrusion, Rub rail
16.	201763-100	Insert, Rub rail, 1”, Chrome
17.	100986	Floor channel
18.	684936	Wheel well trim, Outer, Dual axle
19.	684937	Wheel well trim, Inner, Dual axle
20.	200545-02	Banana wrap, CS rear, Black
21.	101131-02	Underbelly wrap, .024 x 22.5, Black
22.	200543-02	Banana wrap, CS front, Black
23.	114466-01	Casting, Rub rail, Wheel well, RH
24.	114466-02	Casting, Rub rail, Wheel well, LH
25.	114465-02	Casting, Rub rail, Door, LH
26.	114465-01	Casting, Rub rail, Door, RH
27.	512741	Water proof cover w/gasket, Gray
28.	690209	Water heater access cover, Brushed Aluminum
29.	511017-11	Exterior vent, Gray
30.	101323	Casting, Main door light
31.	922288	Access door
32.	690266-06	Power ventilator w/o garnish
33.	114328	Extrusion, Belt line molding
34.	201912-100	Molding, Belt line insert, Chrome

2018 INTERNATIONAL
EXTERIOR SHELL

Wall, Roadside, 28’

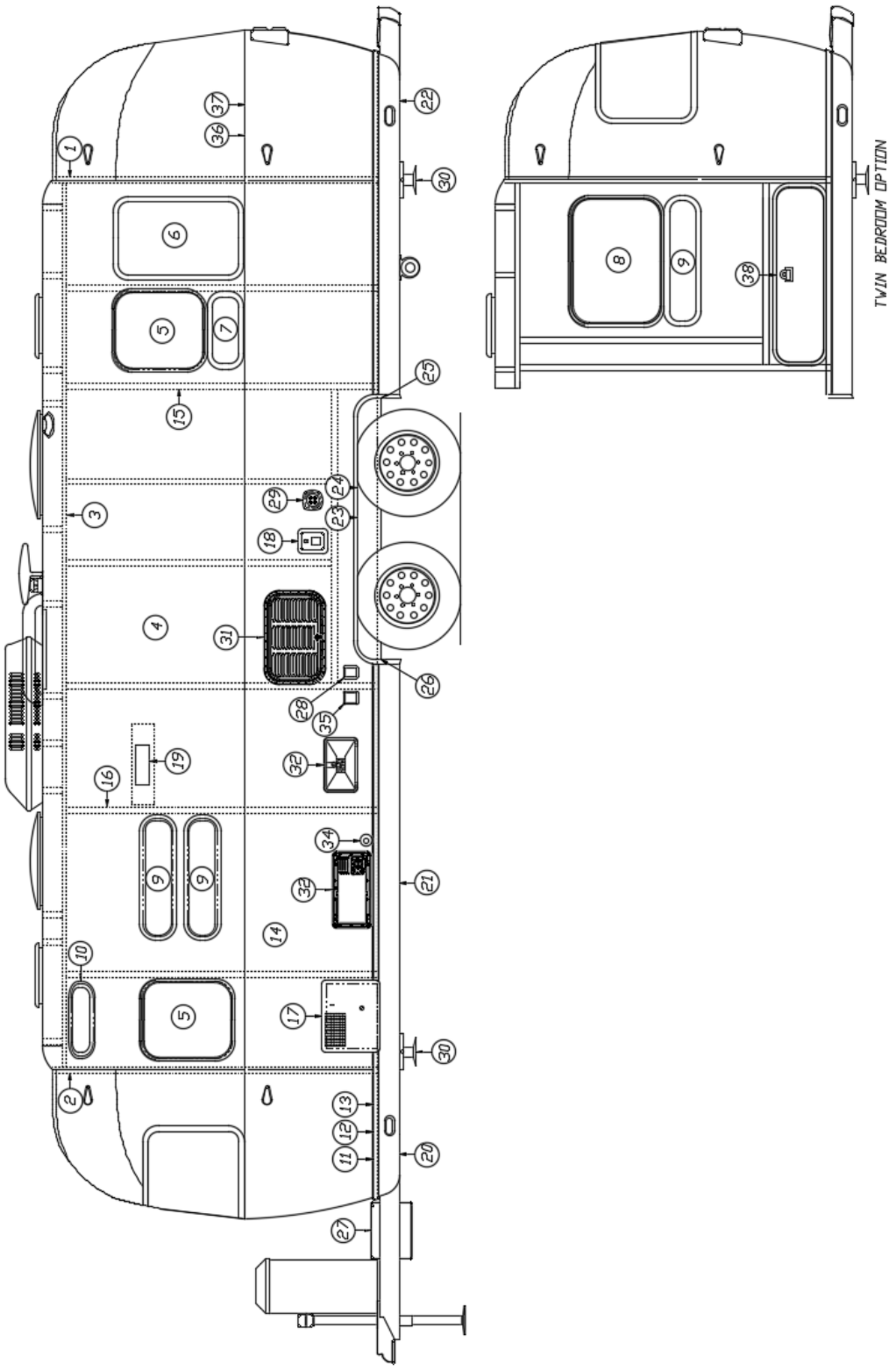

Parts Listed on Next Page

2018 INTERNATIONAL
EXTERIOR SHELL

Wall, Roadside, 28’

	923179S	Shell Assembly
1.	114290-02	Extrusion, Awning/drip rail
2.	114993	Rib, End bow
3.	104707-01	Extrusion, ”I” beam
4.	114880-238	Aluminum sheet, Upper, .04” x 51” x 238”
5.	371323-01	Window, 18”, Opening
6.	371286-01	Window, 18” curved, Fixed
7.	371436	Window, 18” stacked
8.	371324-02	Window, 30”, Opening
9.	371435	Window, 30” stacked
10.	371437-01	Vista view window, 18”
11.	115546	Extrusion, Rub rail
12.	201763-100	Insert, Rub rail, 1”, Chrome
13.	100986	Floor channel
14.	114879-238	Aluminum sheet, Lower, .04” x 33” x 238”
15.	114387-01	Bow, Z-rib, RH
16.	114387-02	Bow, Z-rib, LH
17.	690209	Water heater access cover, Brushed Aluminum
18.	601194	Water fill w/lock, Gray
19.	511017-11	Exterior vent, Gray
20.	200542-02	Banana wrap, RS front, Black
21.	101131-02	Underbelly wrap, .024 x 22.5, Black
22.	200544-02	Banana wrap, RS rear, Black
23.	684936	Wheel well trim, Outer, Dual axle
24.	684937	Wheel well trim, Inner, Dual axle
25.	114466-01	Casting, Rub rail, Wheel well, RH
26.	114466-02	Casting, Rub rail, Wheel well, LH
27.	410551-02	Lid, Battery box
28.	513087-02	Power inlet, Male, 30A, 125V, Gray
29.	601392-06	City water hook-up w/regulator, Chrome
30.	401027-01	Stabilizer jack, Each
31.	923115	Refrigerator access door
32.	690664-05	Furnace exterior door & bezel, Painted Aluminum
33.	602326	Exterior shower
34.	601441-02	Black tank flush
35.	513089	Dual inlet, TV/satellite, Gray
36.	114328	Extrusion, Belt line molding
37.	201912-100	Molding, Belt line insert, Chrome
38.	922288	Access door

2018 INTERNATIONAL
EXTERIOR SHELL

Wall, Curbside, 28’

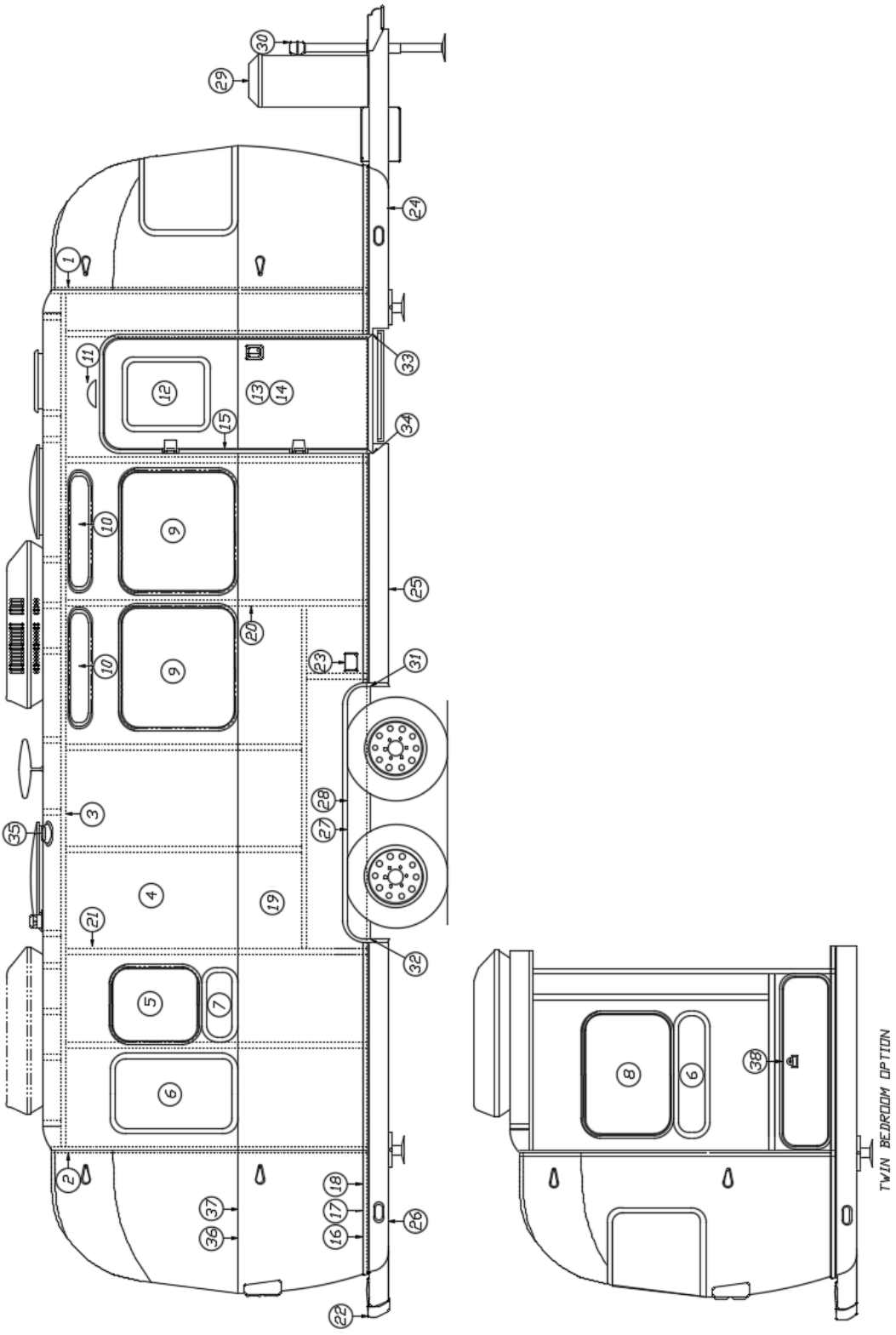

Parts Listed on Next Page

2018 INTERNATIONAL
EXTERIOR SHELL

Wall, Curbside, 28’

	923179S	Shell Assembly
1.	114290-02	Extrusion, Awning/drip rail
2.	114993	End bow
3.	104707-01	Extrusion, ”I” beam
4.	114880-238	Aluminum sheet, Upper, .04” x 51” x 238”
5.	371323-01	Window, 18”, Opening
6.	371286-01	Window, 18” curved, Fixed
7.	371436	Window, 18” stacked
8.	371324-02	Window, 30”, Opening
9.	371380	Window, 30” tall, Opening
10.	371437-02	Vista view window, 30”
11.	101323	Casting, Main door light
12.	371400-01	Window, Main door
13.	115207	Main door
14.	114654	Screen door
15.	114652	Main door jamb, Formed
16.	115546	Extrusion, Rub rail
17.	201763-100	Insert, Rub rail, 1”, Chrome
18.	100986	Floor channel
19.	114879-238	Aluminum sheet, Lower, .04” x 33” x 238”
20.	114387-01	Bow, Z-rib, RH
21.	114387-02	Bow, Z-rib, LH
22.	411054	Rear bumper
23.	512741	Water proof cover w/gasket, Gray
24.	200543-02	Banana wrap, CS front, Black
25.	101131-02	Underbelly wrap, .024 x 22.5, Black
26.	200545-02	Banana wrap, CS rear, Black
27.	684936	Wheel well trim, Outer, Dual axle
28.	684937	Wheel well trim, Inner, Dual axle
29.	921246-01	LP tank cover, Black
30.	400961-04	Power jack, Atwood
31.	114466-01	Casting, Rub rail, Wheel well, RH
32.	114466-02	Casting, Rub rail, Wheel well, LH
33.	114465-01	Casting, Rub rail, Door, RH
34.	114465-02	Casting, Rub rail, Door, LH
35.	690266-06	Power ventilator w/o garnish
36.	114328	Extrusion, Belt line molding
37.	201912-100	Molding, Belt line insert, Chrome
38.	922288	Access door
	201185	Lens, Main door light

2018 INTERNATIONAL
EXTERIOR SHELL

Wall, Roadside, 30’

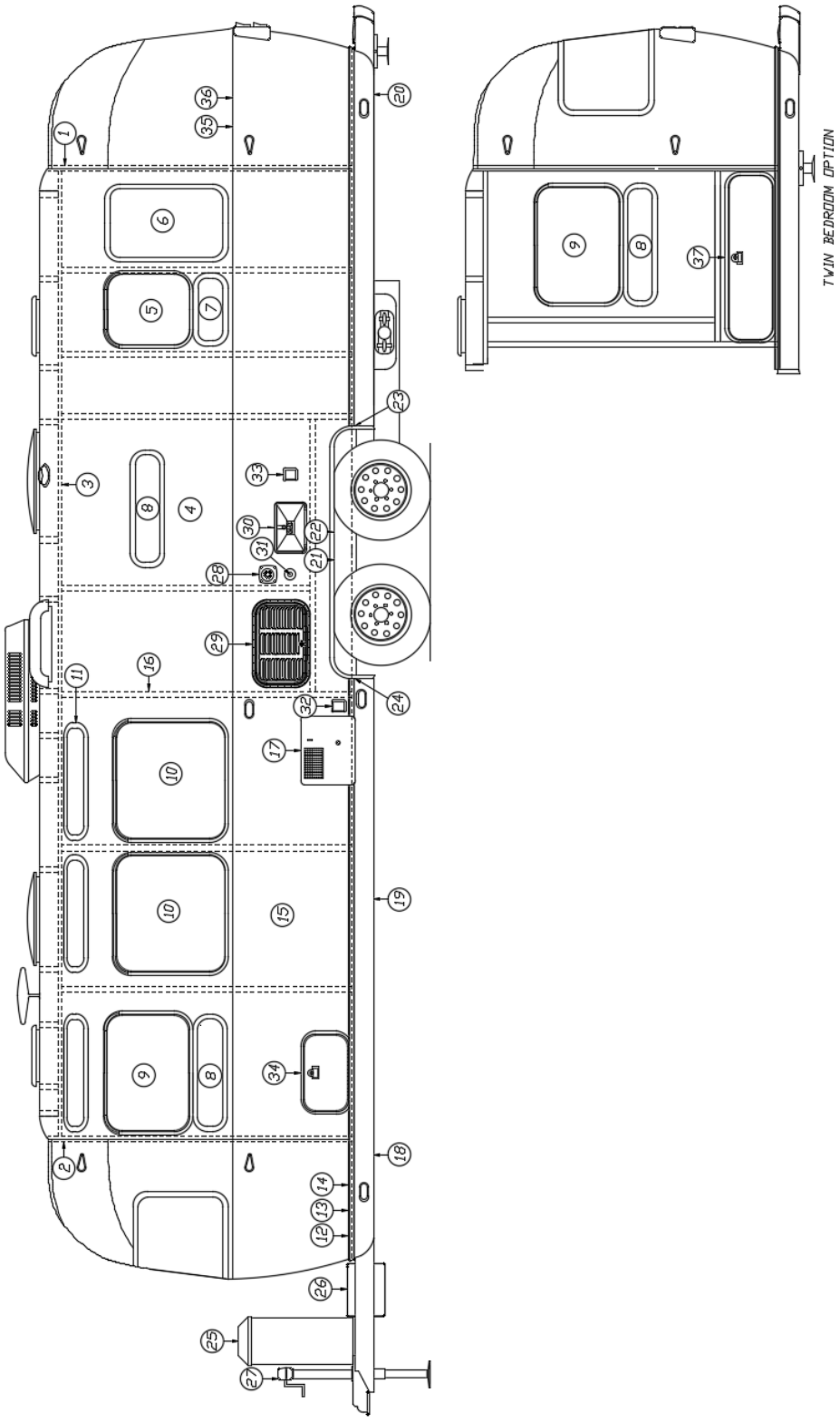

Parts Listed on Next Page

2018 INTERNATIONAL
EXTERIOR SHELL

Wall, Roadside, 30’

923177S	Shell Assembly

1.	114290-02	Extrusion, Awning/drip rail
2.	114993	Rib, End bow
3.	104707-01	Extrusion, ”I” beam
4.	114880-262	Aluminum sheet, Upper, .04” x 51” x 262”
5.	371323-01	Window, 18”, Opening
6.	371286-01	Window, 18” curved, Fixed
7.	371436	Window, 18” stacked
8.	371435	Window, 30” stacked
9.	371324-02	Window, 30”, Opening
10.	371380	Window, 30” tall, Opening
11.	371437-02	Vista view window, 30”
12.	115546	Extrusion, Rub rail
13.	201763-100	Insert, Rub rail, 1”, Chrome
14.	100986	Floor channel
15.	114879-262	Aluminum sheet, Lower, .04” x 33” x 262”
16.	114387-02	Bow, Z-rib, LH
17.	690209	Water heater access cover, Brushed Aluminum
18.	200542-02	Banana wrap, RS front, Black
19.	101131-02	Underbelly wrap, .024 x 22.5, Black
20.	200544-02	Banana wrap, RS rear, Black
21.	684936	Wheel well trim, Outer, Dual axle
22.	684937	Wheel well trim, Inner, Dual axle
23.	114466-01	Casting, Rub rail, Wheel well, RH
24.	114466-02	Casting, Rub rail, Wheel well, LH
25.	921246-01	LP tank cover, Black
26.	410551-02	Lid, Battery box
27.	400961-04	Power jack, Atwood
28.	601392-06	City water hook-up w/regulator, Chrome
29.	923115	Refrigerator access door
30.	602326	Exterior shower
31.	601441-02	Black tank flush
32.	513089	Dual inlet, TV/satellite, Gray
33.	513087-02	Power inlet, Male, 30A, 125V, Gray
34.	100679-01	Side access door
35.	114328	Extrusion, Belt line molding
36.	201912-100	Molding, Belt line insert, Chrome
37.	922288	Access door

2018 INTERNATIONAL
EXTERIOR SHELL

Wall, Curbside, 30’

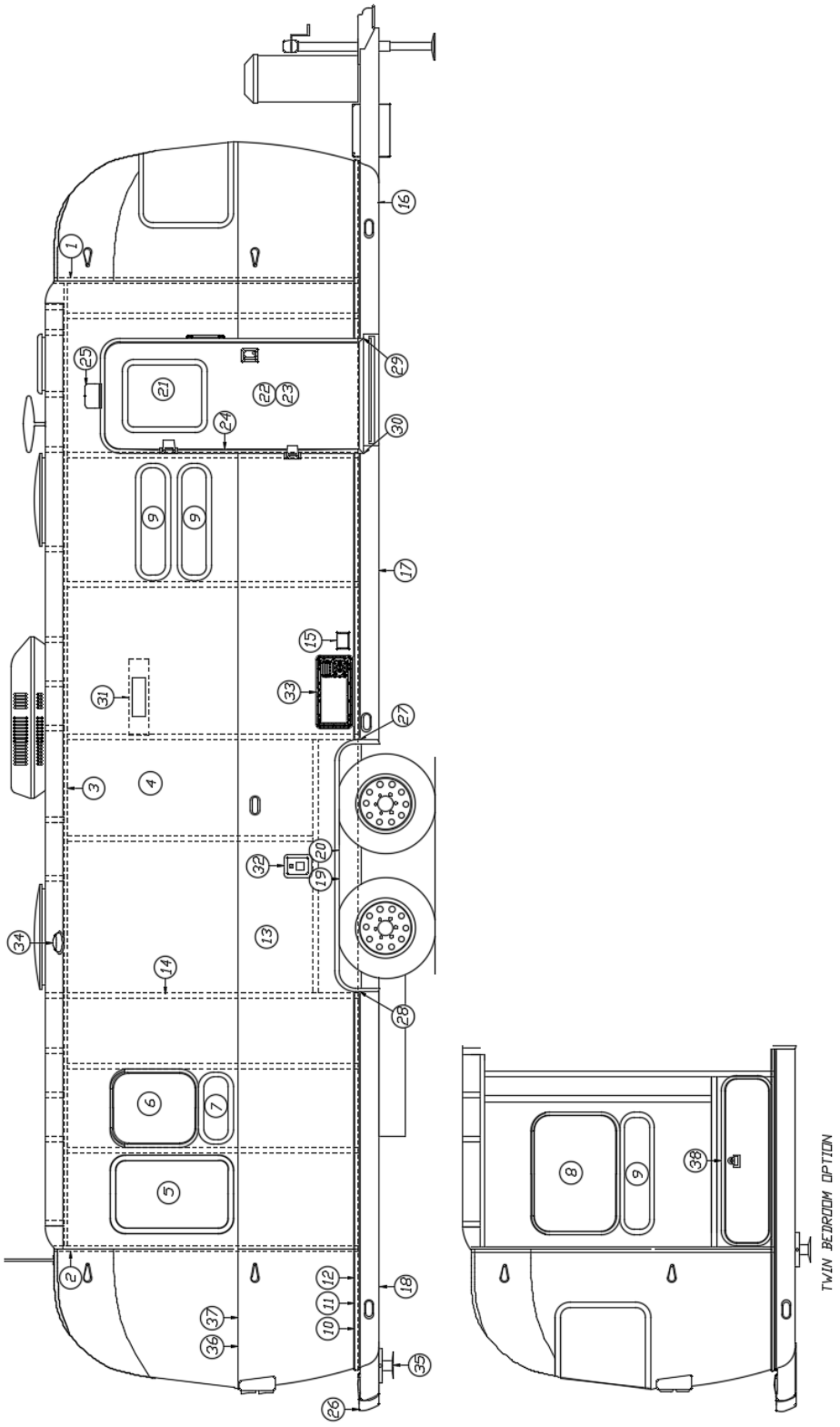

Parts Listed on Next Page

2018 INTERNATIONAL
EXTERIOR SHELL

Wall, Curbside, 30’

	923177S	Shell Assembly
1.	114290-02	Extrusion, Awning/drip rail
2.	114993	End bow
3.	104707-01	Extrusion, ”I” beam
4.	114880-262	Aluminum sheet, Upper, .04” x 51” x 262”
5.	371286-01	Window, 18” curved, Fixed
6.	371323-01	Window, 18”, Opening
7.	371436	Window, 18” stacked
8.	371324-02	Window, 30”, Opening
9.	371435	Window, 30” stack
10.	115546	Extrusion, Rub rail
11.	201763-100	Insert, Rub rail, 1”, Chrome
12.	100986	Floor channel
13.	114879-262	Aluminum sheet, Lower, .04” x 33” x 262”
14.	114387-02	Bow, Z-rib, LH
15.	512741	Water proof cover w/gasket, Gray
16.	200543-02	Banana wrap, CS front, Black
17.	101131-02	Underbelly wrap, .024 x 22.5, Black
18.	200545-02	Banana wrap, CS rear, Black
19.	684936	Wheel well trim, Outer, Dual axle
20.	684937	Wheel well trim, Inner, Dual axle
21.	371400-01	Window, Main door
22.	115207	Main door
23.	114654	Screen door
24.	114652	Main door jamb, Formed
25.	101323	Casting, Main door light
26.	411054	Rear bumper
27.	114466-01	Casting, Rub rail, Wheel well, RH
28.	114466-02	Casting, Rub rail, Wheel well, LH
29.	114465-01	Casting, Rub rail, Door, RH
30.	114465-02	Casting, Rub rail, Door, LH
31.	511017-11	Exterior vent, Gray
32.	601194	Water fill w/lock, Gray
33.	690664-05	Furnace exterior door & bezel, Painted Aluminum
34.	690266-06	Power ventilator w/o garnish
35.	401027-01	Stabilizer jack, Each
36.	114328	Extrusion, Belt line molding
37.	201912-100	Molding, Belt line insert, Chrome
38.	922288	Access door
	201185	Lens, Main door light

2018 INTERNATIONAL
EXTERIOR SHELL

Roof

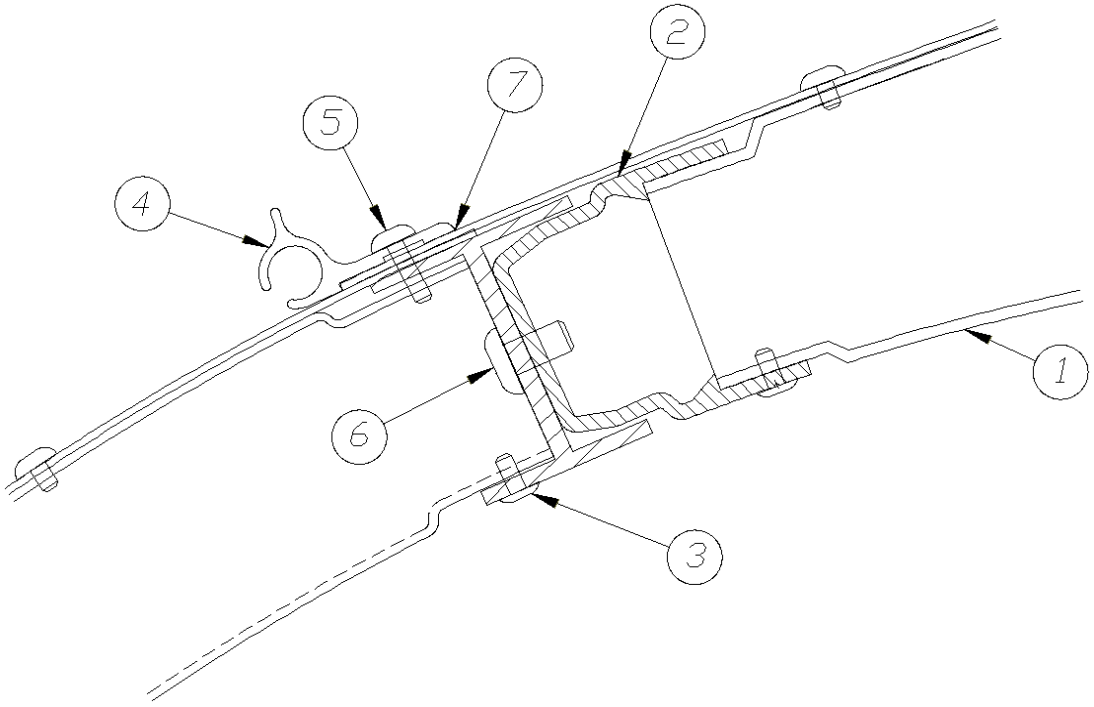

1.	115651	Roof bow, NB
	115586	Roof bow, WB
2.	114987-01	Extrusion, Roof corner
3.	330127-03	Rivet, 1/8”, (Mill) AD43ABS
4.	114290-01	Extrusion, Awning/drip rail, 197”, 23CB, 23FB, 25’, 25FB
	114290-02	Extrusion, Awning/drip rail, 261”, 27FB, 28’, 30’
5.	325003-03	Rivet, 1/8 x 7/16, White
6.	330139-01	Rivet, 1/4", Magnalok SS
7.	365330-05	Adseal, Awning rail, 10.3oz tube
	115727-262	Aluminum sheet, .032” x 72” x 262”, White
	115728-262	Aluminum sheet, .032” x 66.75” x 262”, White, 23CB, 23FB
	115652	Z-bar, Formed, NB
	115571	Z-rib, 3”, WB
	115593	Transition cap, Stretched formed, WB
	115654	Transition cap, Stretched formed, NB

Wrap Protectors and Holdbacks

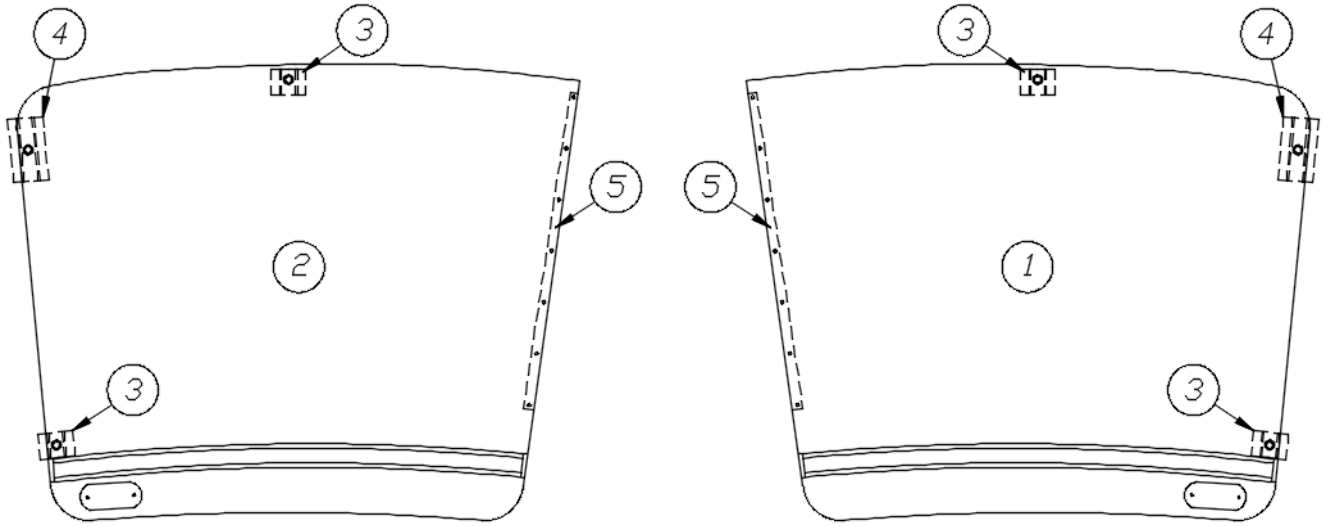

	109325-100	Wrap Protector Set, Tall
	109325-02	Wrap Protector Set, Short, CSA
1.	966277	Wrap Protector, Tall, RS
	685366-100	Wrap Protector, RS, Short, CSA
2.	966276	Wrap Protector, Tall, CS
	685365-100	Wrap Protector, CS, Short, CSA
3.	114819-02	Wrap protector hold back, 2”
4.	114819-03	Wrap protector hold back, 5”
5.	381605-03	Piano hinge, Stainless Steel
	100742-01	Extrusion, Mirror trim
	115546	Extrusion, Rub rail
	201709-02	Extrusion, Trim molding, Black
	114465-01	Casting, Rub rail, RH
	114465-02	Casting, Rub rail, LH
	685343	Gusset, Corner
	500096	Reflector, Amber

2018 INTERNATIONAL
INTERIOR SHELL

Interior Skin

114879-201	Aluminum sheet, .04” x 33” x 201"
114879-238	Aluminum sheet, .04" x 33" x 238"
114879-262	Aluminum sheet, .04" x 33" x 262"
115609-201	Aluminum sheet, .04” x 45” x 201”
115609-238	Aluminum sheet, .04” x 45” x 238”
115609-270	Aluminum sheet, .04” x 45” x 270”
114880-201	Aluminum sheet, .04" x 51" x 201"
114880-238	Aluminum sheet, .04" x 51" x 238"
114880-262	Aluminum sheet, .04" x 51" x 262"
114880-307	Aluminum sheet, .04" x 51" x 307"
114890-01	Interior segment, Front CS, Rear RS
114891-01	Interior segment, Front RS, Rear CS
114892-01	Interior segment, Center narrow
114893-01	Interior segment, Center wide

Interior Wheel Well Liner

200844	Wheel well, Tandem, 66.5", A.B.S
200514	Wheel well Insulator, Plastic, Tandem

Main Door Threshold

115565	Extrusion, Main door threshold
100097	Extrusion, Aluminum track
382290-01	End cap, Threshold
382290-02	End cap, Threshold

2018 INTERNATIONAL
CHASSIS

Axles

410980-16	Axle, 3500 LBs, Nev-R-Adjust, 23CB, 23FB, 23FB A2GO
410980-02	Axle, 3800 LBs, Nev-R-Adjust, 25’, 25FB, 27FB, 28’, 28’ A2GO
410980-11	Axle, 4500 LBs, Nev-R-Adjust, 30’
410980-102	12" LH Nev-R Adjust Brake Assembly
410980-103	12" RH Nev-R Adjust Brake Assembly

Shocks

0220003	Shock assembly
0250173-15	Bolt, Grade 5, 5/8”-18 x 1.5”, Shock mount
0130068-818	Nut, Hex head, Flanged, 5/8”, 18, Shock mount

Tires and Wheels, 15”

410840-02	Tire & Wheel assembly, "E" range
410840-100	Wheel only, 15”, Aluminum
411052	Tire only, 15”, Goodyear Endurance
400844-01	Center cap, Stainless Steel
400923	Lug nut, .5", Acorn type

Spare Tire and Carrier

410843-02	Spare tire & wheel assembly, 15” "E"
410843-100	Wheel only, 15”, Steel
450414	“A” frame spare tire carrier
994073	Spare tire carrier bracket

2018 INTERNATIONAL
CHASSIS

Step, Double

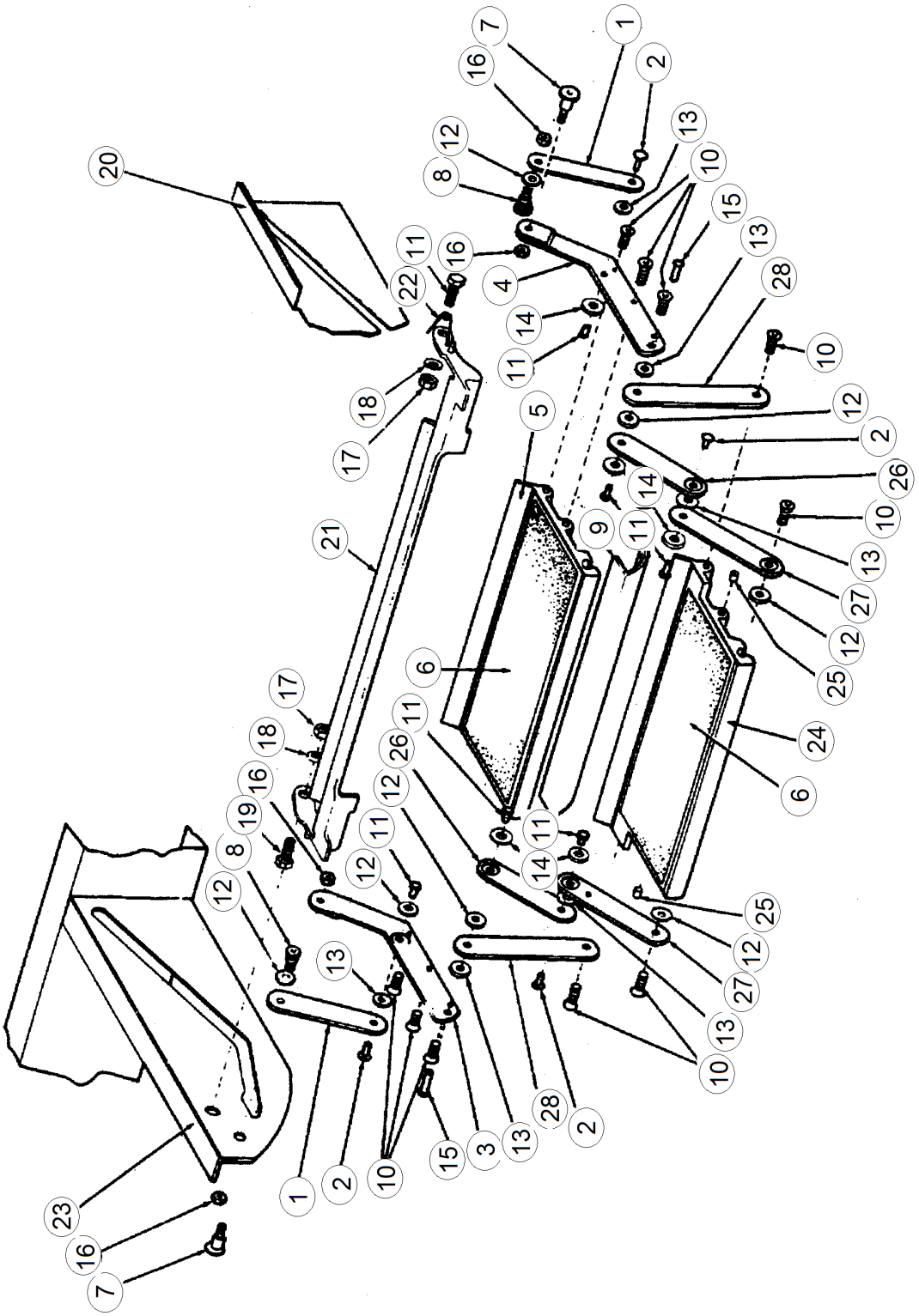

* Parts Listed on Next Page

Step

	3440006	Double step assembly
1.	680213	Arm, upper support
2.	680214	Pin, hinge
3.	680215	Step bracket, left
4.	680216	Step bracket, right
5.	680217	Extrusion, step 20.5”
6.	380069	Safety tread
7.	001152	Bolt, shoulder
8.	001145	Bolt, shoulder, 3/8” thread
9.	680220	Panel
10.	680221	Screw, flat head
11.	680222	Bolt, socket head
12.	680223	Washer, bronze
13.	680224	Washer, wave
14.	680225	Washer, aluminum
15.	680226	Pin, pivot
16.	350005	Nut, hex
17.	350147-25	Nut, Nylock
18.	300005	Washer, flat
19.	345016	Screw, machine
20.	410523	Outrigger, RH (Not included with step assembly.
21.	100298	Casting, step release
22.	0440032	Step spring
23.	410524	Outrigger, LH (Not included with step assembly.
24.	410200	Extrusion, step, 20.0”
25.	380075	Bullet catch
26.	400004	Hinge arm, upper
27.	400003	Hinge arm, lower
28.	400005	Arm, lower support

2018 INTERNATIONAL
CHASSIS

Bumper and Storage, 23CB, 23FB

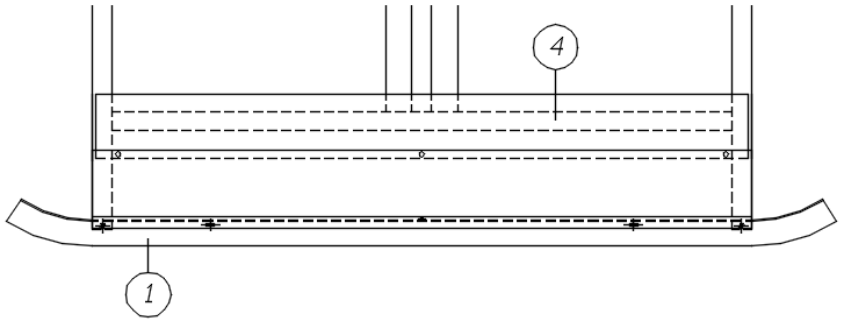

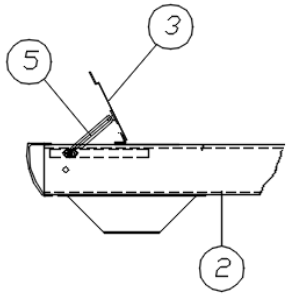

1.	411055	Bumper
2.	454314	Bottom, Sewer hose compartment
3.	454214-01	Lid, Rear hose carrier, Black
4.	114849-06	Aluminum sheet, .06” x 36” x 8’, Black
5.	380024	Arms support, RH
	380203-02	Piano hinge
	382456	Swell latch

Bumper and Storage, 25’, 25FB, 27FB, 28’, 30’

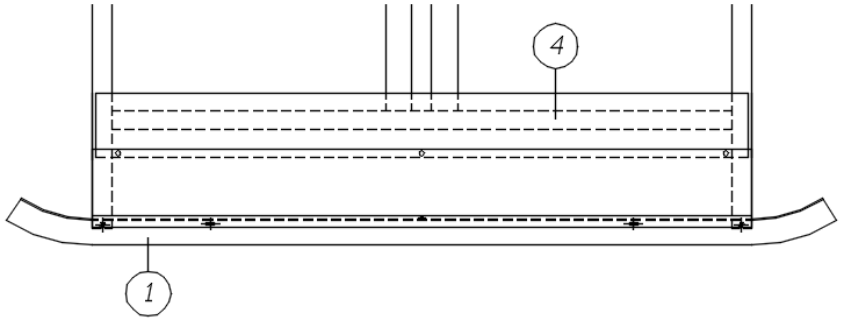

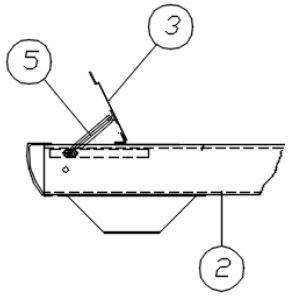

1.	411054	Rear bumper
2.	453538	Bottom, Hose compartment
3.	453497-01	Lid, Rear hose carrier, Black
4.	114849-06	Aluminum sheet, .06” x 36” x 8’, Black
5.	380024	Arms support, RH
	380203-02	Piano hinge
	382456	Swell latch
	112671-19	Vinyl, Compartment Liner

Stabilizing Jacks

401027	Stabilizing jack kit, Set of 4
401027-01	Stabilizer jack, Each
401027-02	Stabilizer jack handle
401027-03	Footpad, Stabilizer jack

Power Jack

400961-04-BOX	Power jack, Atwood
400961-03	Power jack drop foot
400961-02-100	Crank handle, Manual

Hose Carrier

602619-02	EZ hose carrier, 64”, Black
104704-01	Shim, 3 x 3

Underbelly

101131-02	Underbelly wrap, .024 x 22.5, Black
115684	Underbelly, Aluminum, .035 x 65.75

Bumper End Caps

382289-01	Bumper end cap, Right hand
382289-02	Bumper end cap, Left hand

Cross Car Electrical Raceway

453296	Crosscar electrical raceway

Hitch Coupler

680343-01	Marvel coupler, 2-5/16”
680345	Coupler latch repair kit

2018 INTERNATIONAL
DECALS, EXTERIOR TRIM

Decals and Medallions

386068-01	Medallion, 3" Logo, Airstream, Main door
386108	Nameplate, International
386272	Decal, “AIRSTREAM”, Black Chrome
386239	Badge, 3” Dia., Serenity
386196	Decal, Signature Series

Belt Line Trim

114328	Extrusion, Belt line molding
201912-100	Molding, Belt line insert, Chrome
114417	Casting, Belt line closeout

Rub Rail Trim

115546	Extrusion, Rub rail
201763-100	Insert, Rub rail, 1”, Chrome
114466-01	Closeout, Casting, Rub rail, Angled, RH
114466-02	Closeout, Casting, Rub rail, Angled, LH
114465-01	Closeout, Casting, Rub rail, RH
114465-02	Closeout, Casting, Rub rail, LH

Reflectors

500095	Reflector, Red rectangular
500096	Reflector, Amber
510446	Reflector, Red, Stick-on

2018 INTERNATIONAL
DOORS, EXTERIOR

Main Door, LH Hinge

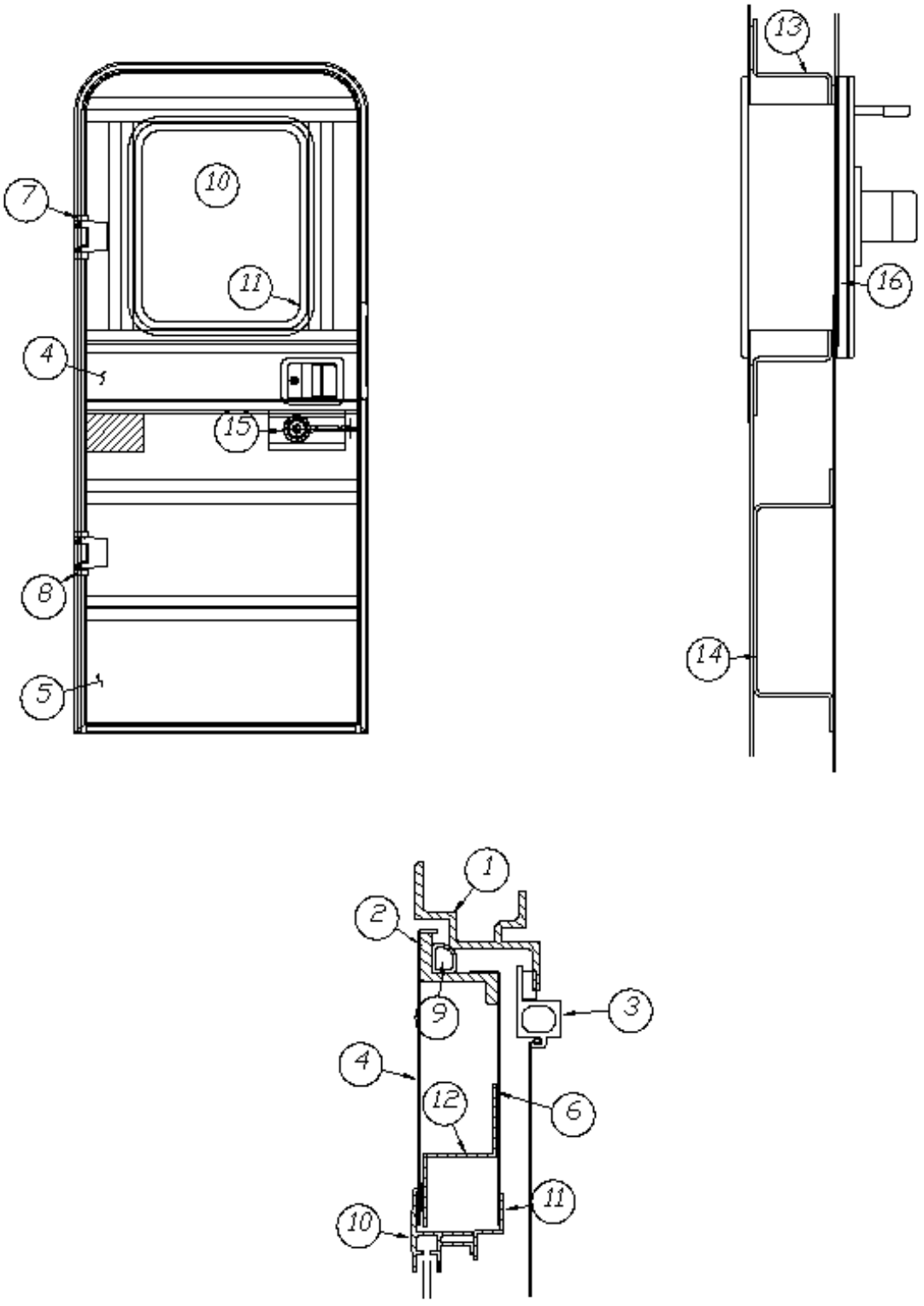

Parts Listed on Next Page

2018 INTERNATIONAL
DOORS, EXTERIOR

Main Door, LH Hinge

	115207	Main door, LH hinge, 23CB, 25’, 28’, 30’
1.	114652	Jamb, Main door, Pre-formed
2.	114653	Frame, Main door, Pre-formed
3.	114654	Screen door
4.	114448-03	Skin, Exterior, Upper main door
5.	114449-03	Skin, Exterior, Lower main door
6.	114475	Main door skin, Inner
7.	381552-03	Hinge, Main door, Upper
8.	381552-04	Hinge, Main door, Lower
9.	365232	Seal, Main door
10.	371400-01	Window, Main door
11.	115208	Trim ring, Main door window
12.	114658	Inner door, Z-bar, Upper & lower
13.	114657	Hat section, Formed, Main door
14.	115413	Hat section, Round dead bolt
15.	382069	Deadbolt, Round, Trimark
16.	203370	Spacer, Deadbolt
	385595	Pocket strike, Main door
	381326	Striker w/Trimark deadbolt
	453851	Bolt, Trimark deadbolt
	114363	Drip cap, Main door
	380290	Housing latch
	380291	Latch
	201056	Striker, Main door, Black plastic
	114507-03	Trim, Main door
	454898	Nut plate, Main door
	365360	Gasket, Nut plate
	203494	Baseplate, Door latch
	382130	P-gasket w/tape backing
	101171	Grab handle, Cast Aluminum

2018 INTERNATIONAL
DOORS, EXTERIOR

Main Door, RH Hinge

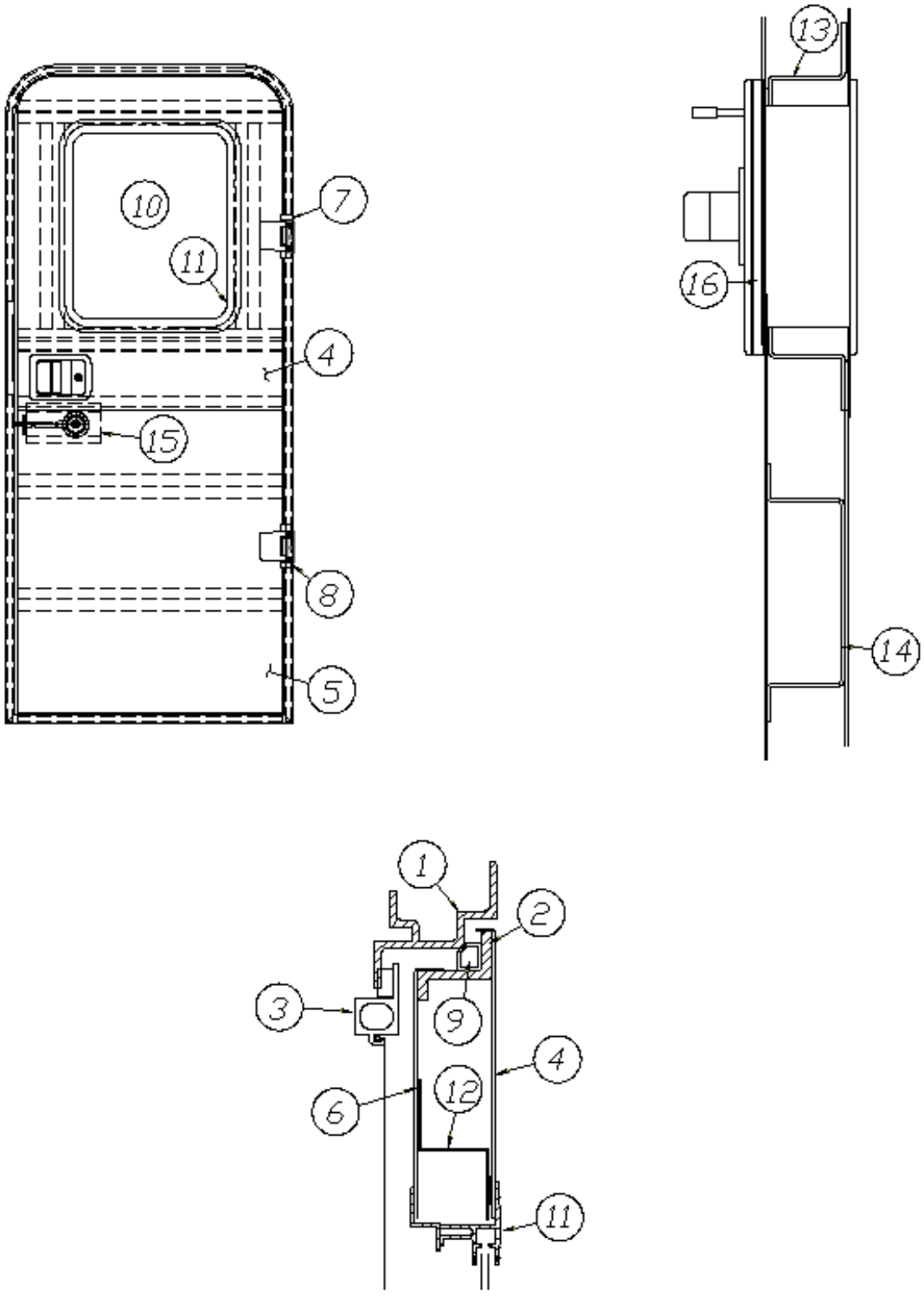

Parts Listed on Next Page

Main Door, RH Hinge

	115207-05	Main Door, RH Hinge, 23FB, 25FB, 27FB
1.	114652-01	Jamb, Main door, Pre-formed
2.	114653-01	Frame, Main door, Pre-formed
3.	114654-01	Screen door, RH Hinge
4.	114448-03	Skin, Exterior, Upper main door
5.	114449-03	Skin, Exterior, Lower main door
6.	114475	Main door skin, Inner
7.	381552-02	Hinge, Main door, Upper
8.	381552-01	Hinge, Main door Lower
9.	365232	Seal, Main door
10.	371400-01	Window, Main door
11.	115208	Trim ring, Main door window
12.	114658	Inner door, Z-bar, Upper & lower
13.	114657	Hat section, Formed, Main door
14.	115413	Door hat section
15.	382069	Deadbolt, Round, Trimark
16.	203370	Spacer, Trimark door Latch
	385595	Pocket strike, Main door
	381326	Striker w/ Trimark deadbolt
	345321-12	Screw, Flat head, Black
	453851	Bolt, Trimark, Deadbolt
	380290	Housing latch
	380291	Latch
	201056	Striker, Main door, Black plastic
	203494	Base plate, Door latch
	382074	Gasket, Grab handle, Main door
	114363	Drip cap, Main door
	114507-03	Trim, Main door
	454898	Nut plate, Main door
	365360	Gasket, Nut plate
	382130	P-gasket w/tape backing
	101171	Grab handle, Cast Aluminum

Screen Door

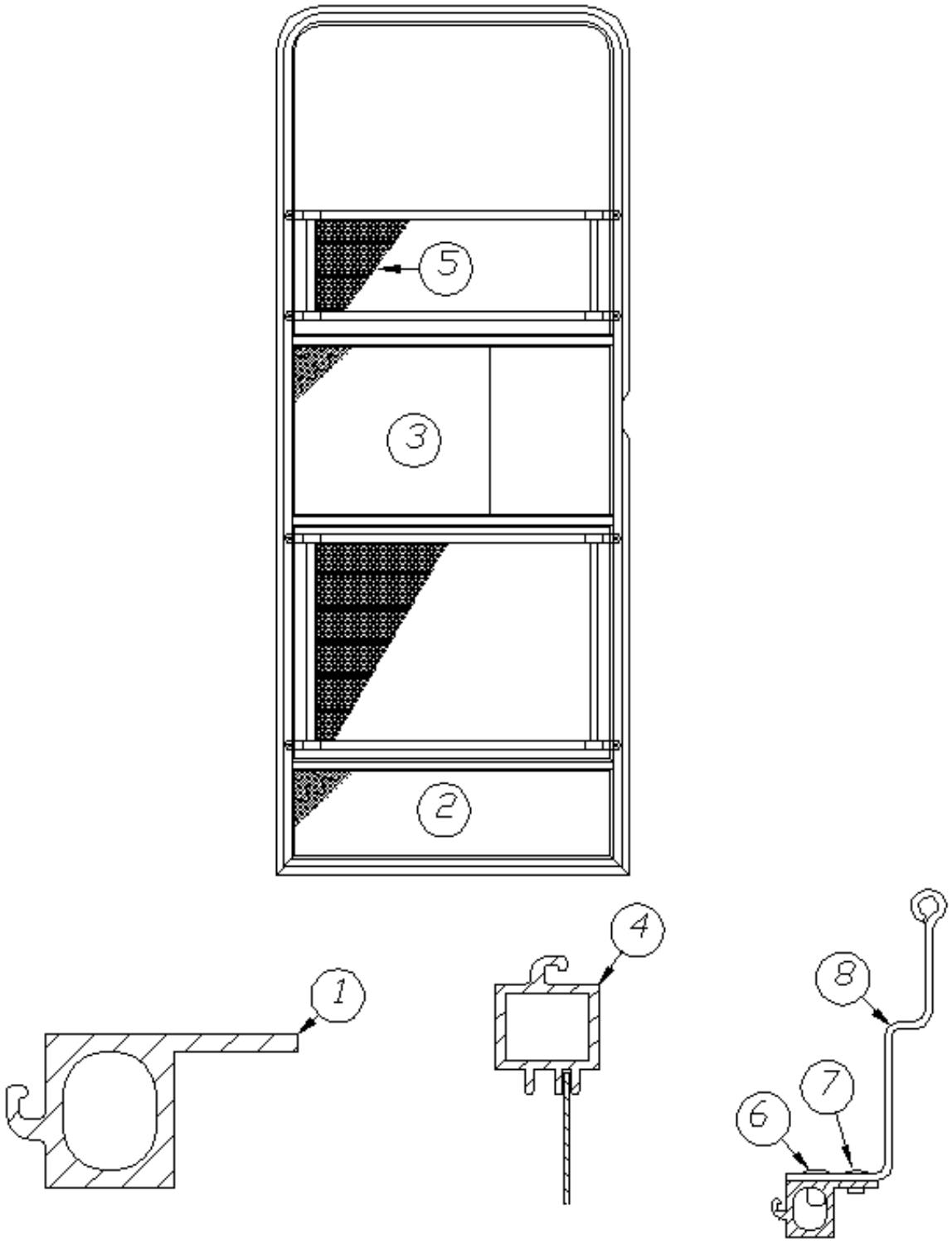

Parts Listed on Next Page

Screen Door

	114654	Screen Door, LH Hinge
	114654-01	Screen Door, RH Hinge
1.	104782-186	Extrusion, Frame
2.	114648-01	Kick panel
3.	114561-01	Panel, Slider
4.	104784-78	Extrusion, Screen door stiffener
5.	380079	Screen, Gray
6.	330130-02	Rivet, 5/32, Mill finish
7.	325122	Rivet, 5/32, Brazier head
8.	385577-02	Tape, Clear, 1-7/8” wide
	380004	Handle with 8/32” x 1 screw
	683946	Bug seal, Edge of screen door close out
	203287-02	Close out, Plastic
	115171-01	Screen door guard, Top
	115171-02	Screen door guard, Bottom
	0404-0001	Spline, Gray
	701624	Velcro, loop 5/8" wide
	701625	Velcro, hook 5/8" wide
	381454	Screen door hold back latch, Bullet
	381531-01	Hinge, Upper
	381531-02	Hinge, Lower

2018 INTERNATIONAL
DOORS, EXTERIOR

Access Door, Refrigerator

923114	Refrigerator door w/screen
104439	Louvered panel
372264	Screen, Refrigerator door
923115	Refrigerator door w/frame
112024	Jamb, Refrigerator door
380988	Hinge, .5 Leaf, 16”
203714	Trim Lock Neoprene
365334	Tape, Sealfoam 7# w/PSA one side
381812	Twist latch, Chrome

Access Door, Battery

410551-02	Lid, Battery box
381430	Lock, Twist, Straight cam
380203-01	Piano Hinge, 1/8", Battery box lid
381814	Wing nut, 5/16, 28’, 30’
381613	Plastisol cover, LP wing handle

Access Door, Furnace

690664-05	Furnace exterior door & bezel, Painted Aluminum
690663-06	Furnace exterior door & bezel, Painted Aluminum, 23FB

Access Door, Water Heater

690209	Water heater access cover, Brushed Aluminum

Access Door, Exterior Shower

602326	Exterior shower
602326-100	Shower head with hose & mixer
602326-101	Exterior shower door
602326-102	Clip for shower head

2018 INTERNATIONAL
DOORS, EXTERIOR

Access Door, Small, Side and Rear End

100679-01	Small access door, Rear and side
365035	Seal, Side access door
380773	Hinge, Access door
382230-02	Compression latch w/key code
115295	Spacer, Formed compartment door
115296	Jamb, Formed compartment door

Access Door, Trunk, 25’, 25FB, 28’, 30’

921159	Door, Trunk
114673	Panel, Outer trunk door
114674	Panel, Inner trunk door
114675	Jamb, Trunk door
382230-02	Compression latch w/key code
360016	Bump-on rubber, 25FB, 28’, 30’
365035	Rubber seal, Access door
381065-10	Cable support, 10"

Access Door, Front and Side, 27FB, 28’, 30’

922288	Access door assembly, Large
922288-01	Jamb, Large access door
922288-02	Access door assembly w/o rubber seal
104831	Frame, Large access door
380774-02	Hinge, Compartment door, 48”
382230-02	Compression latch w/key code
365035	Rubber seal, Access door
381065-10	Cable support, 10"

2018 INTERNATIONAL
WINDOWS, SCREENS

Windows and Screens, 23CB

371323-01	Window, 18”, Opening
371436	Window, 18" stacked
371380	Window, 30" tall, Opening
371328	Window, 43” flat, Front end
371328-100	Front window glass w/hardware, No frame
372229	Window, 21 x 28 opening
371400-01	Window, Main door
371438	Window, Bath door
372088-101	Panoramic window, RS front, CS rear
372089-101	Panoramic window, CS front, RS rear
371437-02	Vista view window, 30"
372174-03	Screen, 18" opening window
372215-01	Screen, 30" tall, Opening window
372173-02	Screen, Front window

Windows and Screens, 23FB

371323-01	Window, 18”, Opening
371328	Window, 43” flat, Front end
371328-100	Window glass w/hardware, No frame
371436	Window, 18” stacked
371380	Window, 30" tall, Opening
371380-01	Window, 30”, Egress
371400-01	Window, Main door
371438	Window, Bath door
372218	Window, Rear, 21” x 28”, Opening
372088-101	Panoramic window, RS front, CS rear
372089-101	Panoramic window, CS front, RS rear
372174-03	Screen, 18" window
372215-01	Screen, 30" tall window
372215-03	Screen, 30”, Egress window
372220-02	Screen, 21 x 28, Clear frame
372173-02	Screen, Front window

2018 INTERNATIONAL
WINDOWS, SCREENS

Windows and Screens, 25’

371323-01	Window, 18”, Opening
371324-02	Window, 30”, Opening
371380	Window, 30" tall, Opening
371436	Window 18" stacked
371435	Window 30" stacked
371346-01	Window, 48.97” flat, Rear egress
371346-02	Window, 48.97" flat, Front end
371346-101	Window, Glass only
371400-01	Window, Main door
371438	Window, Bath door
372088-101	Panoramic window, RS front, CS rear
372089-101	Panoramic window, CS front, RS rear
371437-02	Vista view window, 30”
372174-03	Screen, 18" opening window
371347-03	Screen, Square front window
372215-01	Screen, 30" tall, Opening window

Windows and Screens, 25FB

371323-01	Window, 18”, Opening
371380	Window, 30" tall, Opening
371380-01	Window, 30”, Egress
371436	Window 18" stacked
371348-03	Window, Front w/silver handles
371346-02	Window, 48.97" flat, Rear
371346-101	Front window, Glass only
371400-01	Window, Main door
371438	Window, Bath door
372088-101	Panoramic window, RS front, CS rear
372089-101	Panoramic window, CS front, RS rear
371437-02	Vista view window, 30”
372174-03	Screen, 18" opening window
371347-03	Screen, Square front window
372215-01	Screen, 30" tall, Opening window
372215-03	Screen, 30”, Egress window

2018 INTERNATIONAL
WINDOWS, SCREENS

Windows and Screens, 27FB

371324-02	Window, 30”, Opening
371380	Window, 30" tall, Opening
371380-01	Window, 30”, Egress
371435	Window, 30" stacked
371346-02	Window, 48.97" flat Front & wrap
371346-101	Front window, Glass only
371436	Window 18" stacked
371400-01	Window, Main door
371438	Window, Bath door
371437-02	Vista view window, 30"
372088-101	Panoramic window, RS front, CS rear
372089-101	Panoramic window, CS front, RS rear
372175-04	Screen, 30" opening window
372176-02	Screen, Front w/round corners
372234	Screen, Rear w/sq. corners
372215-03	Screen, 30”, Egress window
372215-01	Screen, 30" tall, Opening window

Windows and Screens, 28’

371436	Window, 18" stacked
371435	Window, 30" stacked
371286-01	Window, 18” curved, Fixed
371323-01	Window, 18”, Opening
371346-02	Window, Front, Dark glass
371346-101	Front window, Glass only
371348-02	Window, Rear w/red handles
371324-02	Window, 30”, Opening
371380	Window, 30" tall, Opening
371400-01	Window, Main door
371438	Window, Bath door
372088-101	Panoramic window, RS front, CS rear
372089-101	Panoramic window, CS front, RS rear
371437-02	Vista view window, 30"
371437-01	Vista view window, 18”
372174-03	Screen, 18" opening window
371347-03	Screen, Square front window
371349-03	Screen, Rear escape
372215-01	Screen, 30" tall, Opening window

Windows and Screens, 30’

371436	Window, 18" stacked
371435	Window, 30" stacked
371286-01	Window, 18 curved, Fixed
371323-01	Window, 18”, Opening
371346-02	Window, Front, Dark glass
371346-101	Front window, Glass only
371348-02	Window, Rear w/red handles
371324-02	Window, 30”, Opening
371380	Window, 30" tall, Opening
371400-01	Window, Main door
372088-101	Panoramic window, RS front, CS rear
372089-101	Panoramic window, CS front, RS rear
371437-02	Vista view window, 30"
371347-03	Screen, Square front window
372215-01	Screen, 30" tall
371349-03	Screen, Rear escape
372174-03	Screen, 18" opening window

Window Screen Assembly

683946	Seal, Fuzz Gray (screen)
380079	Screen, Gray
0404-0001	Spline, Gray

Vista View Window, 18”

371437-01	Vista view window, 18”
203961-03	Trim ring, 18" vista view
704199-01	Shade, 19.25 x 9.5, 1” rail, Ash Grey
922772-01	Backer, Vista view blind, 18"

Vista View Window, 30”

371437-02	Vista view window, 30"
203961-04	Trim ring, 30" vista view
704199-02	Shade, 31.25 x 9.5, 1” rail, Ash Grey
922772-02	Backer, Vista view blind 30"

2018 INTERNATIONAL
WINDOWS, SCREENS

Main Door Window Trim Ring

371319-06	Trim ring, Main door window

Window Trim

372269	Trim ring, Inner support, 30"
372270	Trim ring, Inner support, 18"
372228	Trim ring, 18 x 30 window
372227	Trim ring, Inner spacer 18 x 30
372267	Trim ring, 30" stack window, Clear
372268	Trim ring, 18" stack window, Clear
203225-01	Trim, Gray flexible

Panoramic Window Trim

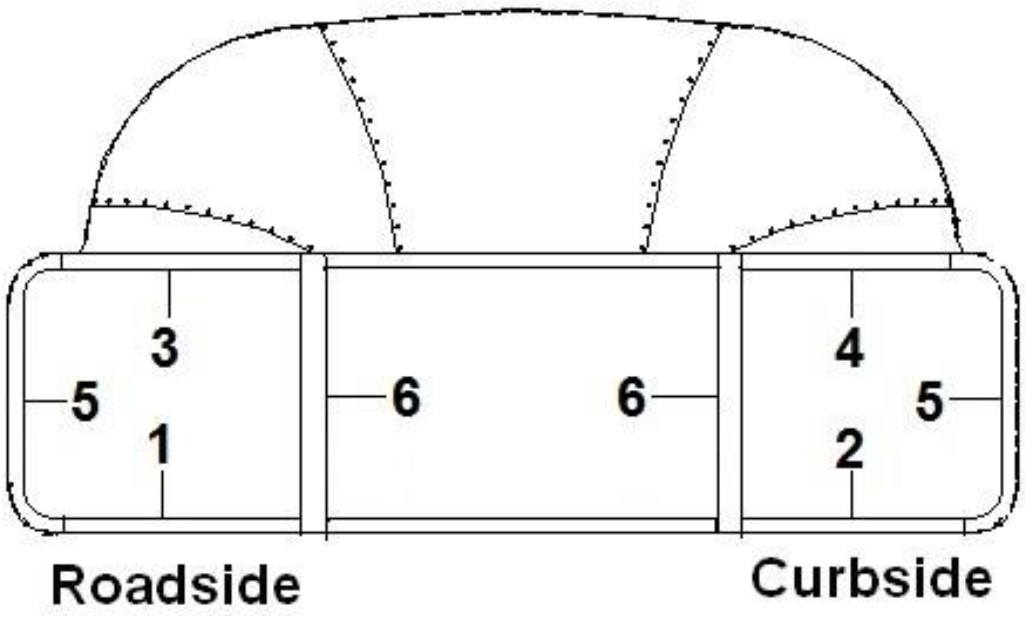

1.	201579-02	Trim ring, Lower, Gray
2.	201580-02	Trim ring, Lower, Gray
3.	201581-05	Trim ring, Upper, Gray
4.	201581-06	Trim ring, Upper, Gray
5.	201578-02	End cap, Trim ring Gray
6.	110900-01	Trim formed, Aluminum, RH/LH
	203225-01	Trim lok, Gray .75"

Window Parts Diagram

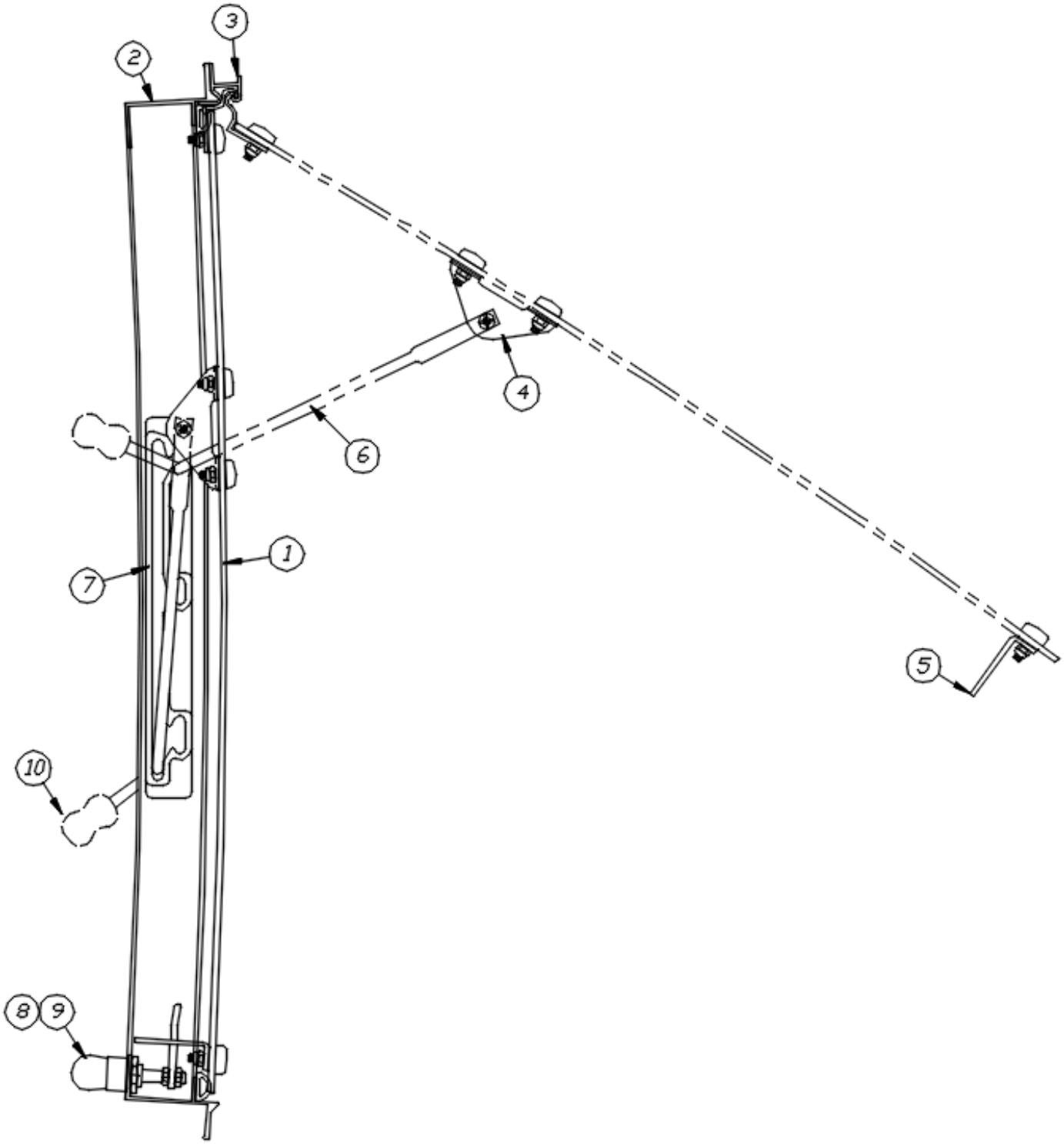

Parts Listed on Next Page

Window Parts Diagram

	371323-01	Window, 18”, Opening
	371324-02	Window, 30”, Opening
	371380	Window, 30" tall, Opening
1.	195510-12	Glass assembly, 18” window
	195510-07	Glass assembly, 30” opening window
	195510-93	Glass assembly, 30” tall window
2.	371447-03	Frame assembly, 18” window
	371447-02	Frame assembly, 30” window
	371447-01	Frame assembly, 30” tall window
3.	371448-07	Extrusion, Window hinge eyebrow, Fixed, 18” window
	371448-06	Extrusion, Window hinge eyebrow, Fixed, 30” window
	371448-05	Extrusion, Window hinge eyebrow, Fixed, 30” window, Tall
4.	114478	Bracket, Window prop
5.	114479-01	Bracket, Window closer, RH
	114479-02	Bracket, Window closer, LH
6.	382362	Opening arm, RH
	382361	Opening arm, LH
7.	382360	Window guide, RH
	382359	Window guide, LH
8.	382367-01	Latch assembly, Chrome
	382367-02	Latch assembly, Egress, Red
9.	115780-01	Handle, Chrome
	195467-05	Handle, Red
10.	380230-03	Knob, Window arm, Silver
	380230-04	Knob, Window arm, Red
	115776	Lock paw, Window latch
	115770	Hinge stop
	115778	Latch body, Zinc die cast
	115779	Latch shaft
	310030	Drive lock pin, 5/32 x 5/8

Window Stone Guards

685275-100	3-piece stone, Panoramic windows, Narrow body
685275-103	Stone guard, Center piece only, Narrow body
110188-01	3-piece stone, Panoramic windows, Wide body
110102	Stone guard, Center piece only, Wide body
685275-101	CS wrap protector, Solar Grey, Stone guard
685275-102	RS wrap protector, Solar Grey, Stone guard
685358	Turn fast stud
685362	Retainer, Split ring
685359	Rubber receptacle
685361	Bracket for rubber receptacle
685361-01	Bracket for rubber receptacle
685363	Slip joint hinge, SS, CS per pair
683960	Arm support
683959	Arm support bracket
114749	Y-hinge
114750	J-hinge
685364	Bracket, Upper hinge, 45.375, Stoneguard
381021-01	Latch, Draw flexible
114815-01	Extrusion, Frame, Aluminum
685354	Front window key, 90° angle
685378-01	Rubber spline, ¼”
685351	Rubber frame, Black
290812-01	Plexi-glass sheet, 1/8” x 28” x 84”
685355	Slip joint, SS hinge
101401	Extrusion, Door latch housing
381688	Bump-on

2018 INTERNATIONAL
AWNINGS

Patio Awnings, Signature

702993-15	Patio awning, 13'-5", 23CB
702993-27	Patio awning, 14’-2”, 23FB
702993-06	Patio awning, 16'-4.25", 25’, 25FB
702993-17	Patio awning, 18'-5.25”, 27FB
702993-08	Patio awning, 18’-4.5”, 28’
702993-28	Patio awning, 21’-4.25”, 30’

Patio Awnings, Serenity

702993-31	Patio awning, 13’-5”, 23CB
702993-39	Patio awning, 14’-2”, 23FB
702993-30	Patio awning, 16’-4.25”, 25’, 25FB
702993-33	Patio awning, Pa18’-5.25”, 27FB
702993-35	Patio awning, 18'-4.25", 28’
702993-38	Patio awning, 21'-4.25", 30’

Patio Awning Hardware and Lights

702993-37	Center support, Satin, 30’
702993	Mounting hardware, Zip Dee
385577	Tape, Clear, Wear strip, 3.5" wide
345326-06	Screw, Tapping, #10 SST. PPH. 1.25”
512918-02	LED flex light strip, 23CB, 23FB, 25’, 25FB
512918-03	LED flex light strip, 27FB, 28’, 30’

2018 INTERNATIONAL
AWNINGS

Power Awnings, Signature

704049-29	Power awning, 13’-6”, 23CB
704049-31	Power awning, 14’-3”, 23FB
704049-04	Power awning, 16’ 4.25”, 25’, 25FB
704049-09	Power awning, 18’ 5.25”, 27FB
704049-07	Power awning, 18’ 4.25”, 28’
704049-14	Power awning, 21’ 4.25”, 30’

Power Awnings, Serenity

704049-30	Power awning, 13’-6”, 23CB
704049-32	Power awning, 14’-3”, 23FB
704049-05	Power awning, 16’ 4.25”, 25’, 25FB
704049-10	Power awning, 18’ 5.25”, 27FB
704049-08	Power awning, 18’ 4.25”, 28’
704049-15	Power awning, 21’ 4.25”, 30’

Power Awnings Hardware

704049-01	Hardware kit, 65” support arm, 23CB, 23FB, 25’
704049-25	Hardware kit, 65” support arm, 25FB, 27FB, 30’
704049-26	Hardware kit, 79.63” support arm, 28’
365369	Gasket, Power awning
365369-01	Gasket, Power awning bracket
365369-02	Gasket, Power awning main support
330134	Rivet, Counter sunk, Olympic RV6
382202	Grommet, Liquid tight
382199	Plug, 1” ID hole, Nickel
382199-03	Hole cover, 2”
454931-02	Backer, 12.50”, 23CB, 23FB, 25’, 30’
385577	Tape, Clear, Wear strip, 3.5” wide
386257	Front & rear label, Power awning cable
512652	Power cable, Relax awning
382614	Awning Upper Bracket Gasket kit, sheet of 10

Power Awnings, A2GO

704034-01	Patio Awning with A2GO Logo, 14’-2”, 23FB A2GO
704034-02	Patio with A2GO Logo, 18’-4.25”, 28’ A2GO
704034-03	Relax awning hardware, 65”, 23FB A2GO
704034-05	Relax awning hardware, 79.63”, 28’ A2GO
704034-04	Silkscreen for logo

*Silkscreen must be ordered when ordering the awning with A2GO Logo.

2018 INTERNATIONAL
AWNINGS

Window Awnings, Signature

703181-01	Window awning, 47”, 23CB, 23FB
703181-16	Window awning, 13'-5.25", 23CB
703181-29	Window awning, 14’-2.25”, 23FB
703181-05	Window awning, 16’-4.5”, 25’, 25FB
703181-20	Window awning w/hardware, 52.63”, 25’, 25FB, 27FB
703181-21	Window awning, 18'-6.25", 27FB
703181-12	Window awning, 18’-4.5”, 28’
703181-15	Window awning, 52.63”, 28’, 30’
703181-42	Window awning, 15'-11.5, 30’
703181-43	Window awning, 49", 30’

Window Awnings, Serenity

703181-36	Window awning, 47”, 23CB, 23FB
703181-38	Window awning, 13’-5.25”, 23CB
703181-47	Window awning, 14’-2¼”, 23FB
703181-37	Window awning, 16’-4.5”, 25’, 25FB
703181-35	Window awning w/hardware, 52.63”, 25’, 25FB, 27FB
703181-40	Window awning, 18’-6.25”, 27FB
703181-41	Window awning, 18’-4.5”, 28’
703181-34	Window awning, 52.63”, 28’, 30’
703181-44	Window awning, 15’-11.5”, 30’
703181-45	Window awning, 49”, 30’

2018 INTERNATIONAL
DRAPES AND SHADES

Drapes and Shades, 23CB Signature

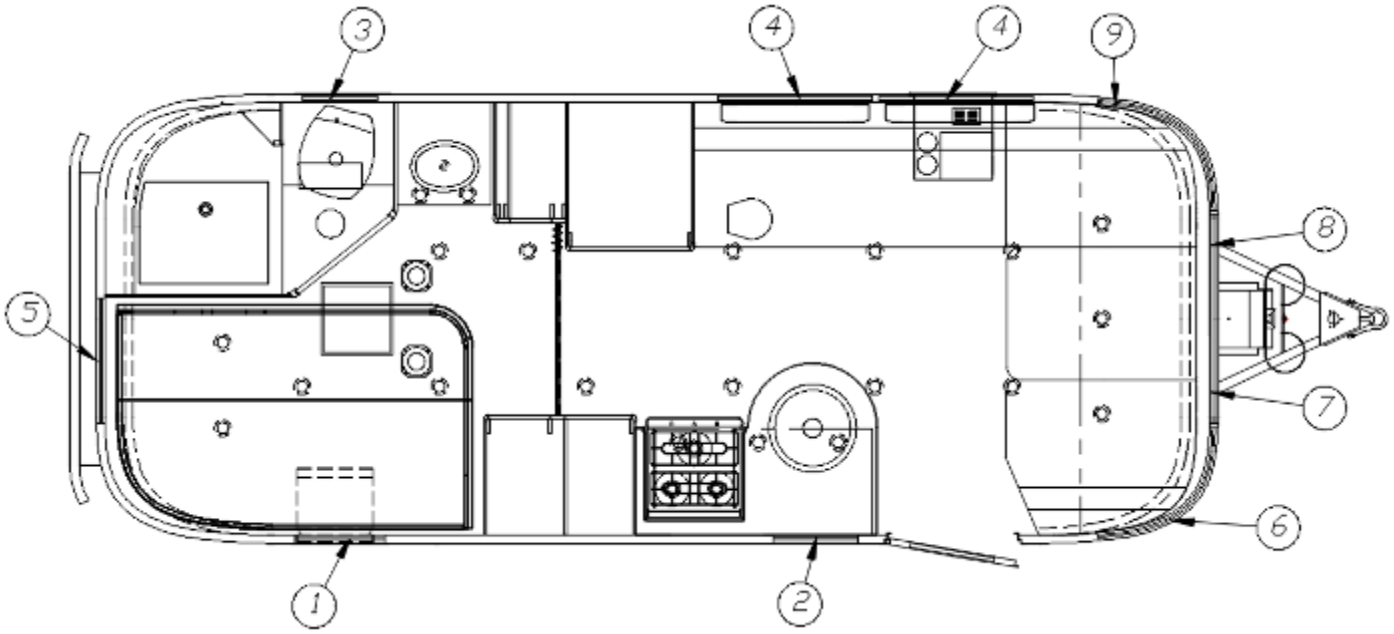

111558	Window Coverings Install
1. 998144-18	Drape, Side window, 28 x 32.5
2. 703700-01	Shade, 19 x 24, Oceanair
3. 703700-07	Shade, 17.75 x 34, Oceanair
4. 703700-04	Shade, 29.75 x 34, Oceanair
5. 998144-17	Drape, Rear window, 33 x 25.5
6. 998144-09	Drape, CS side panel, 37 x 25.5
7. 998144-10	Drape, CS front panel, 23 x 25.5
8. 998144-12	Drape, RS front panel, 23 x 25.5
9. 998144-11	Drape, RS side panel, 37 x 25.5
704199-02	Shade, 31.25 x 9.5, 1” rail, Ash Grey
702804-03	Shade, Skylight, Pleated, 19.25 x 20

2018 INTERNATIONAL
DRAPES AND SHADES

Drapes and Shades, 23CB Serenity

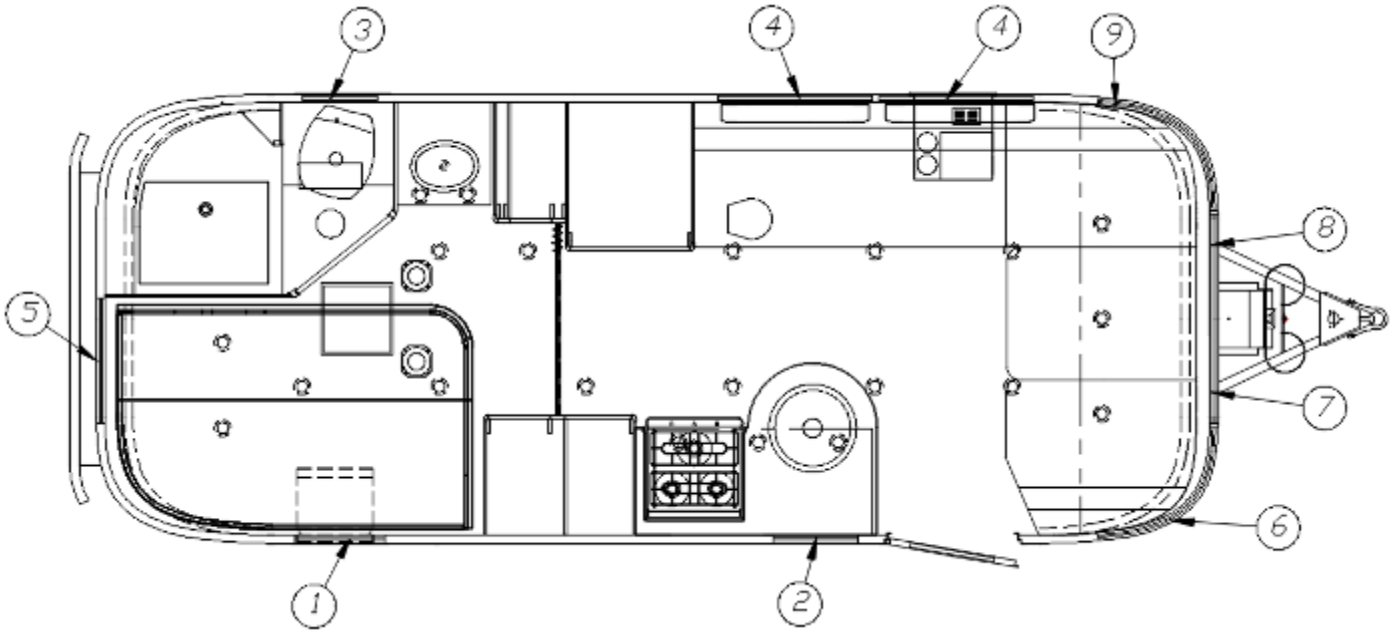

	111846	Window Coverings Install
1.	998144-18	Drape, Side window, 28 x 32.5
2.	703700-01	Shade, 19 x 24
3.	703700-07	Shade, 17.75 x 34
4.	703700-04	Shade, 29.75 x 34
5.	998144-17	Drape, Rear window, 33 x 25.5
6.	998144-09	Drape, CS side panel, 37 x 25.5
7.	998144-10	Drape, CS front panel, 23 x 25.5
8.	998144-12	Drape, RS front panel, 23 x 25.5
9.	998144-11	Drape, RS side panel, 37 x 25.5
	704199-02	Shade, 31.25 x 9.5, 1” rail, Ash Grey
	702804-03	Shade, Skylight, Pleated, 19.25 x 20

2018 INTERNATIONAL
DRAPES AND SHADES

Drapes and Shades, 23FB Signature

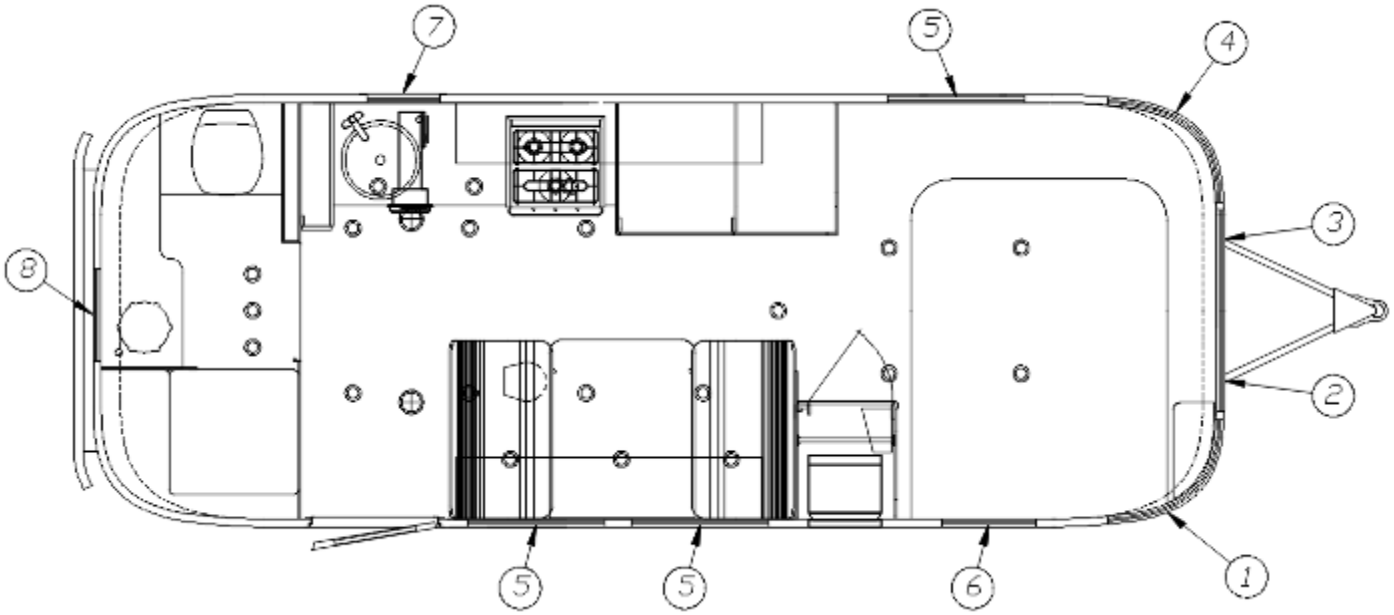

	111911	Window Coverings Install
1.	998144-09	Drape, CS side panel, 37 x 25.5
2.	998144-10	Drape, CS front panel, 23 x 25.5
3.	998144-12	Drape, RS front panel, 23 x 25.5
4.	998144-11	Drape, RS side panel, 37 x 25.5
5.	703700-04	Shade, 29.75 x 34, Oceanair
6.	703700-07	Shade, 17.75 x 34, Oceanair
7.	703700-01	Shade, 19 x 24, Oceanair
8.	703700-03	Shade, 25.25 x 34, Oceanair
	702804-03	Shade, Skylight, Pleated, 19.25 x 20

2018 INTERNATIONAL
DRAPES AND SHADES

Drapes and Shades, 23FB Serenity

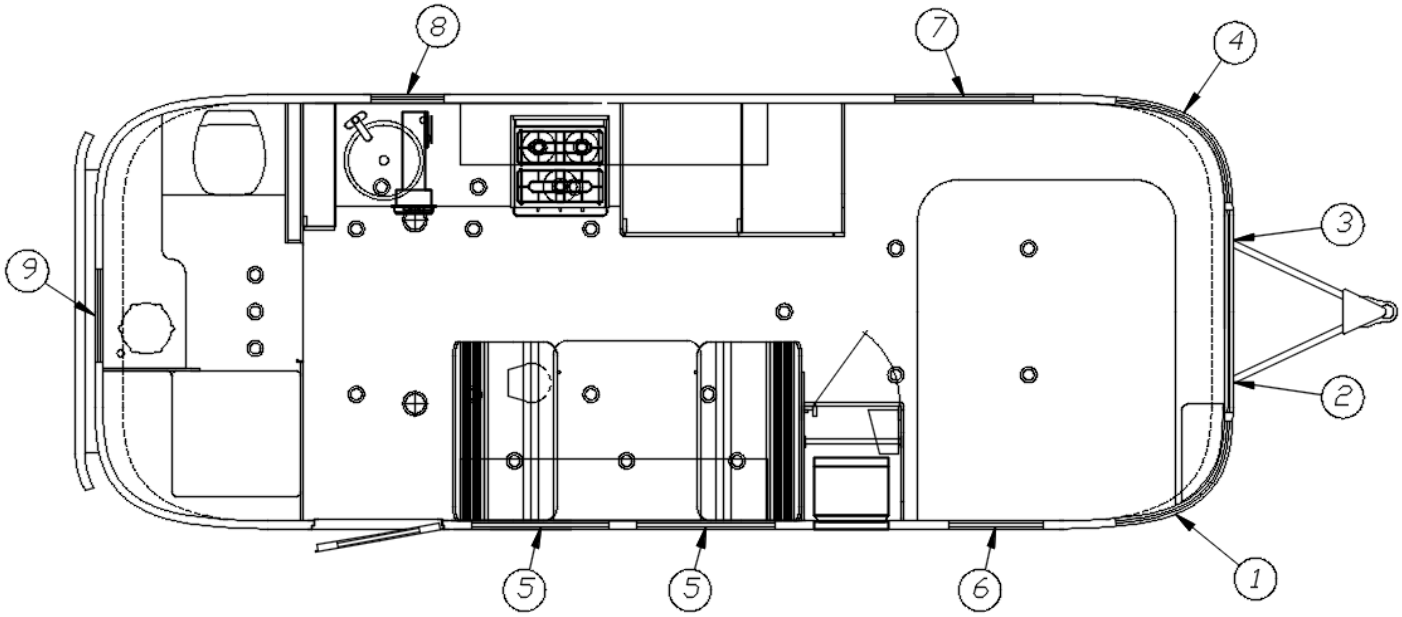

111912	Window Coverings Install

1. 998144-09	Drape, CS side panel, 37 x 25.5
2. 998144-10	Drape, CS front panel, 23 x 25.5
3. 998144-12	Drape, RS front panel, 23 x 25.5
4. 998144-11	Drape, RS side panel, 37 x 25.5
5. 703700-04	Shade, 29.75 x 34, Oceanair
6. 998171-18	Drape, CS, 14 x 34.5
7. 998171-20	Drape, 19 x 34.5
8. 703700-01	Shade, 19 x 24, Oceanair
9. 703700-03	Shade, 25.25 x 34, Oceanair

2018 INTERNATIONAL
DRAPES AND SHADES

Drapes and Shades, 25’ Signature

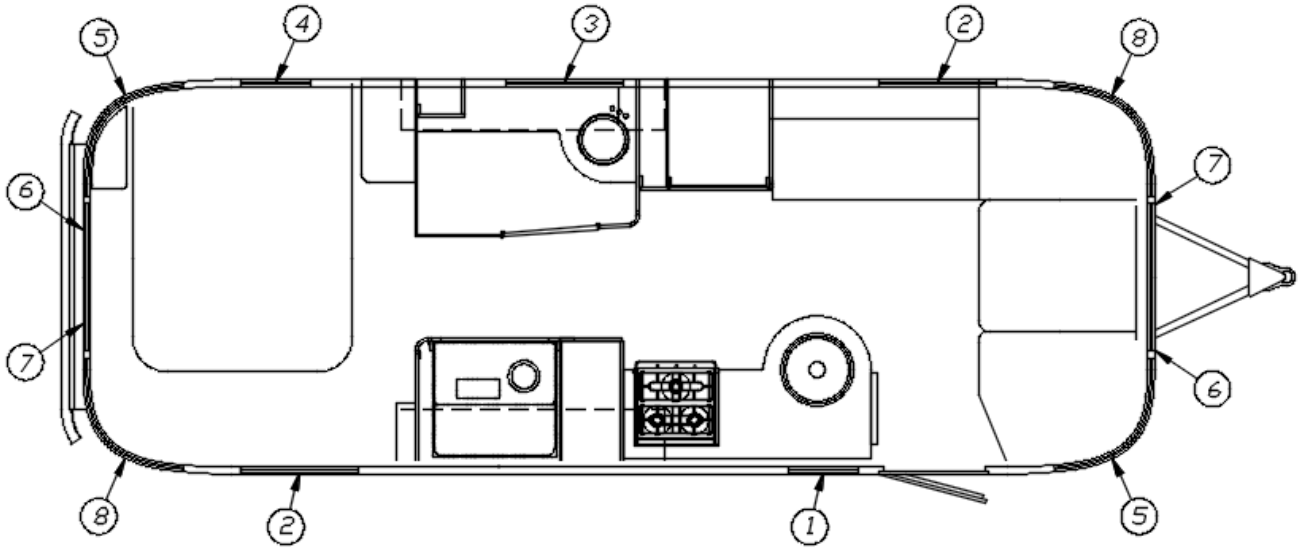

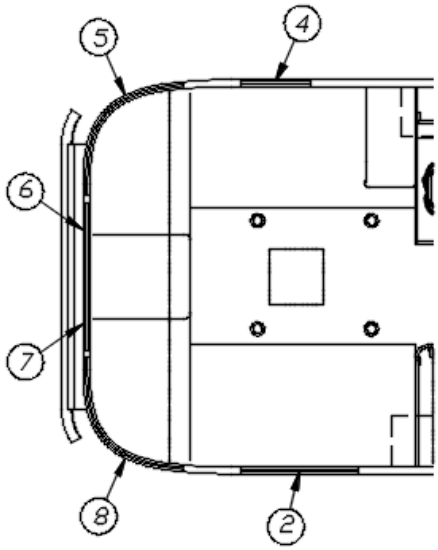

111964	Window Coverings Install
1. 703700-05	Shade, 19 x 34, Oceanair
2. 703700-04	Shade, 29.75 x 34, Oceanair
3. 703700-02	Shade, 32.5 x 24, Oceanair
4. 703700-07	Shade, 17.75 x 34, Oceanair
5. 998144-09	Drape, CS side panel, 37 x 25.5
6. 998144-05	Drape, CS front panel, 27 x 25.5
7. 998144-07	Drape, RS front panel, 27 x 25.5
8. 998144-11	Drape, RS side panel, 37 x 25.5
704199-02	Shade, 31.25 x 9.5, 1” rail, Ash Grey
704120-02	Shade, Skylight, 19.25 x 20, Grey

2018 INTERNATIONAL
DRAPES AND SHADES

Drapes and Shades, 25’ Serenity

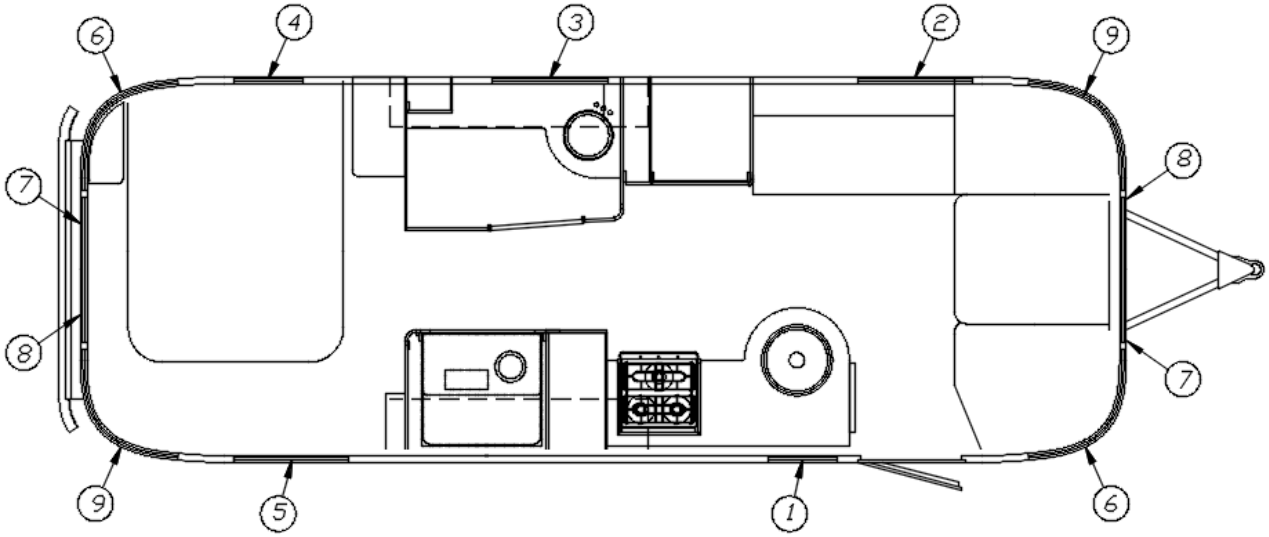

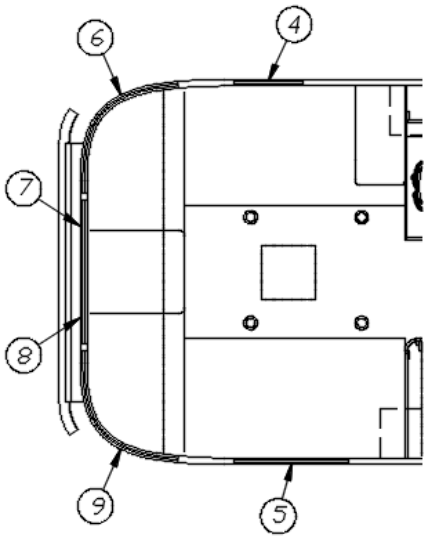

	111965	Window Coverings Install
1.	703700-05	Shade, 19 x 34, Oceanair
2.	703700-04	Shade, 29.25 x 34, Oceanair
3.	703700-02	Shade, 32.5 x 24
4.	998171-18	Drape, CS, 14 x 34.5
5.	998171-20	Drape, 19 x 34.5
6.	998144-09	Drape, CS side panel, 37 x 25.5
7.	998144-05	Drape, CS front panel, 27 x 25.5
8.	998144-07	Drape, RS front panel, 27 x 25.5
9.	998144-11	Drape, RS side panel, 37 x 25.5
	704199-02	Shade, 31.25 x 9.5, 1” rail, Ash Grey
	704120-02	Shade, Skylight, 19.25 x 20, Grey

2018 INTERNATIONAL
DRAPES AND SHADES

Drapes and Shades, 25FB Signature

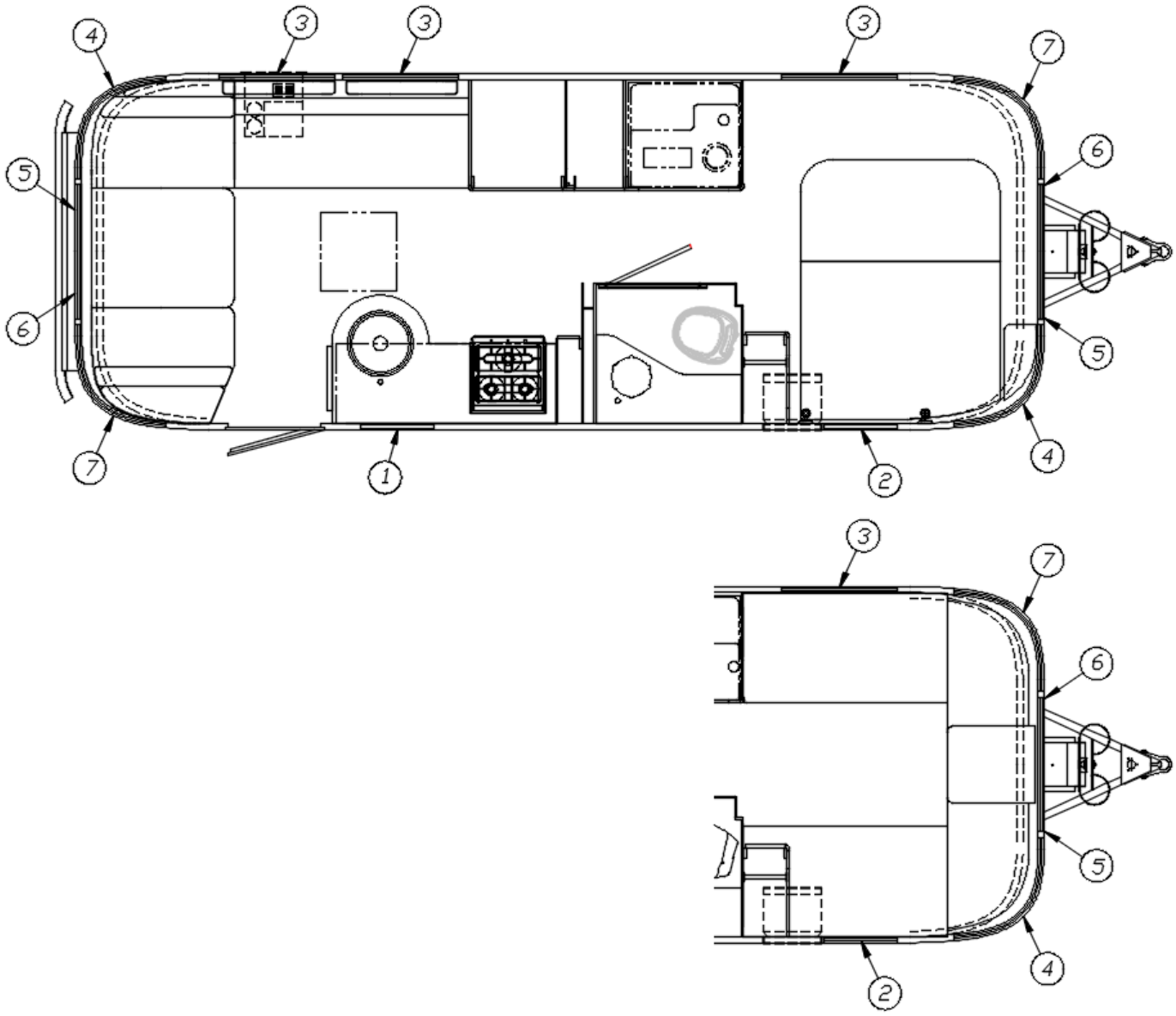

111455-01	Window Coverings Install
1. 703700-05	Shade, 19 x 34, Oceanair
2. 703700-07	Shade, 17.75 x 34, Oceanair
3. 703700-04	Shade, 29.75 x 34, Oceanair
4. 998144-11	Drape, CS side panel, 37 x 25.5
5. 998144-05	Drape, CS front panel, 27 x 25.5
6. 998144-07	Drape, RS front panel, 27 x 25.5
7. 998144-09	Drape, CS side panel, 37 x 25.5
704199-02	Shade, 31.25 x 9.5, 1” rail, Ash Grey
704120-02	Shade, Skylight, 19.25 x 20, Grey

2018 INTERNATIONAL
DRAPES AND SHADES

Drapes and Shades, 25FB Serenity

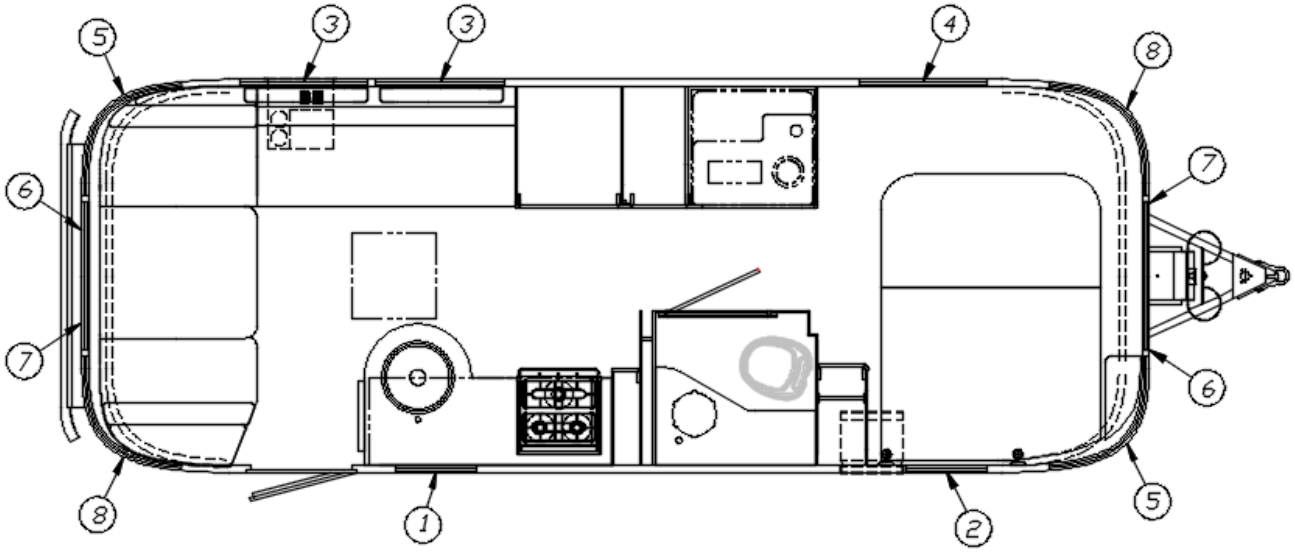

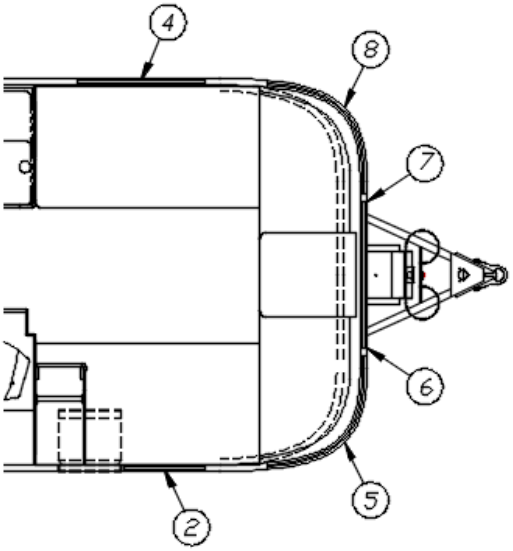

111847	Window Coverings Install
1. 703700-05	Shade, 19 x 34, Oceanair
2. 998171-18	Drape, 14 x 34.5
3. 703700-04	Shade, 29.75 x 34, Oceanair
4. 998171-20	Drape, 18 x 34.5
5. 998144-11	Drape, RS side panel, 37 x 25.5
6. 998144-05	Drape, CS front panel, 27 x 29
7. 998144-07	Drape, RS front panel, 27 x 25.5
8. 998144-09	Drape, CS side panel, 37 x 25.5
704199-02	Shade, 31.25 x 9.5, 1” rail, Ash Grey
704120-02	Shade, Skylight, 19.25 x 20, Grey

2018 INTERNATIONAL
DRAPES AND SHADES

Drapes and Shades, 27FB Signature

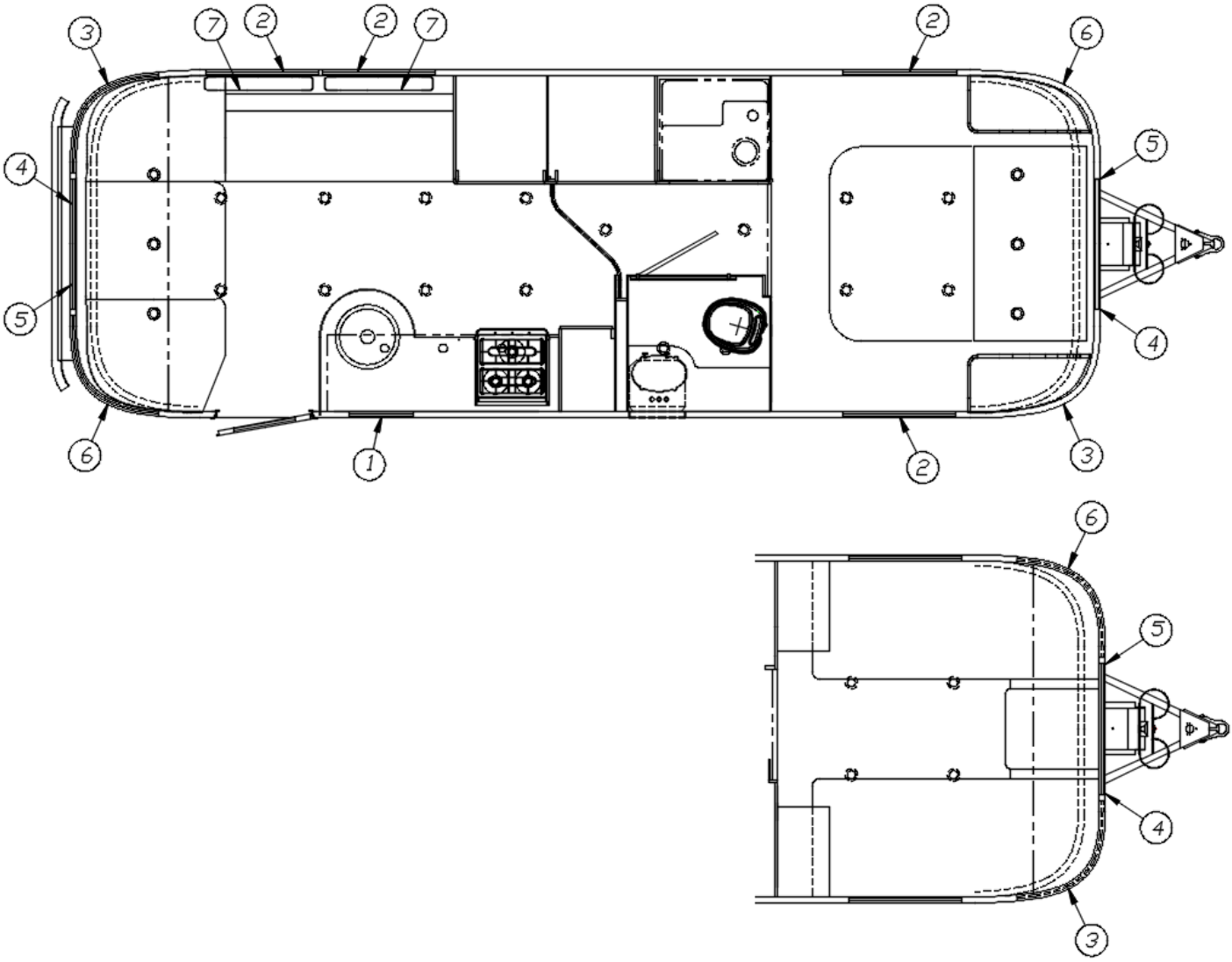

111541-01	Window Coverings Install
1. 703700-05	Shade, 19 x 34, Oceanair
2. 703700-04	Shade, 29.75 x 34, Oceanair
3. 998144-09	Drape, CS side panel, 37 x 25.5
4. 998144-05	Drape, CS front panel, 27 x 25.5
5. 998144-07	Drape, RS front panel, 27 x 25.5
6. 998144-11	Drape, RS side panel, 37 x 25.5
7. 704199-02	Shade, 31.25 x 9.5, 1” rail, Ash Grey
704120-01	Shade, Skylight, 14.5 x 22, Grey
704120-02	Shade, Skylight, 19.25 x 20, Grey

2018 INTERNATIONAL
DRAPES AND SHADES

Drapes and Shades, 27FB Serenity

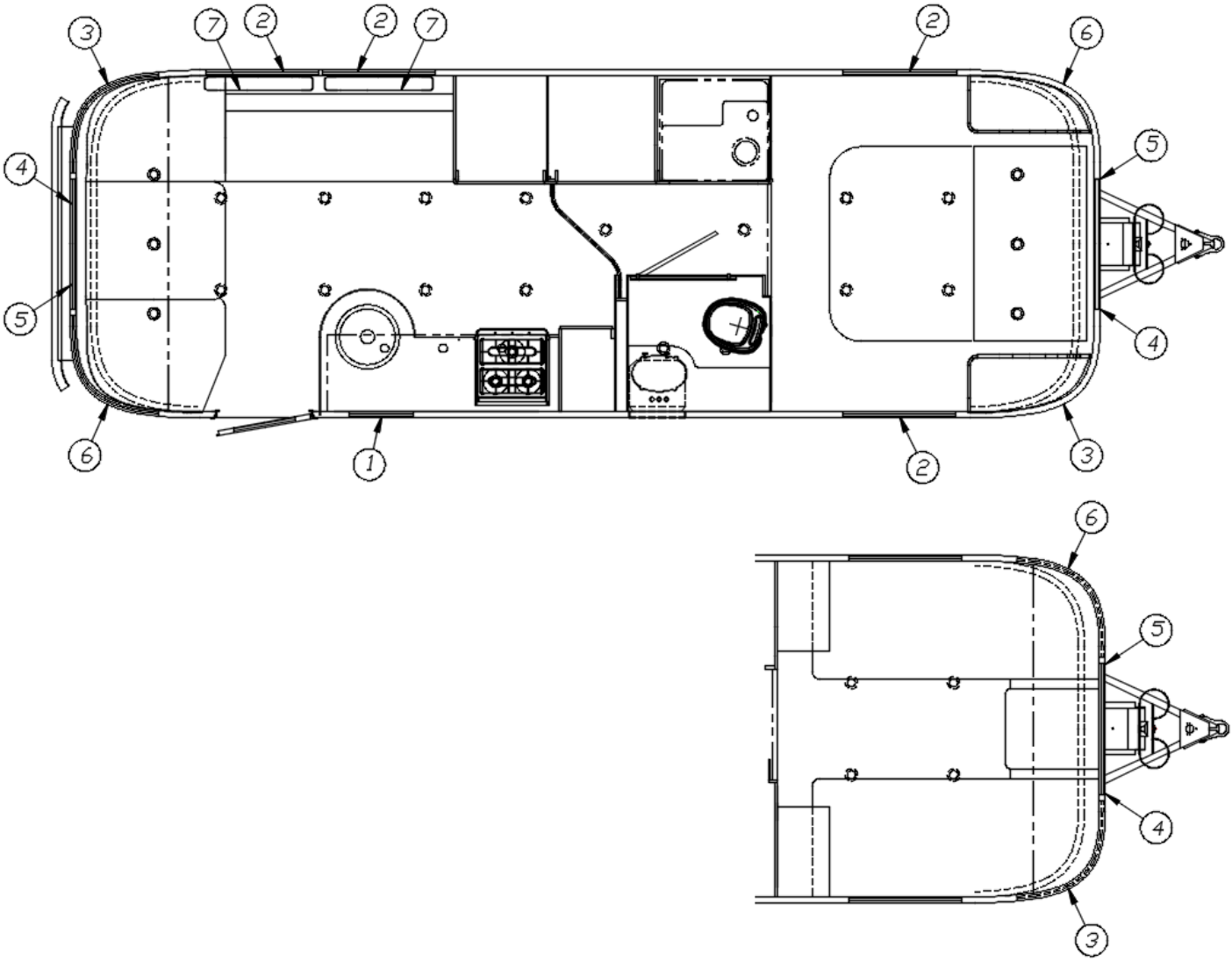

	111848	Window Coverings Install
1.	703700-01	Shade, 19 x 24, Oceanair
2.	703700-04	Shade, 29.75 x 34, Oceanair
3.	998144-09	Drape, CS side panel, 37 x 25.5
4.	998144-05	Drape, CS front panel, 27x 29
5.	998144-07	Drape, RS front panel, 27x 29
6.	998144-11	Drape, RS side panel, 37 x 25.5
7.	998171-20	Drape, CS rear panel, 19 x 35.5
8.	704199-02	Shade, 31.25 x 9.5, 1” rail, Ash Grey
	704120-01	Shade, Skylight, 14.5 x 22, Grey
	704120-02	Shade, Skylight, 19.25 x 20, Grey

2018 INTERNATIONAL
DRAPES AND SHADES

Drapes and Shades, 28’ Signature

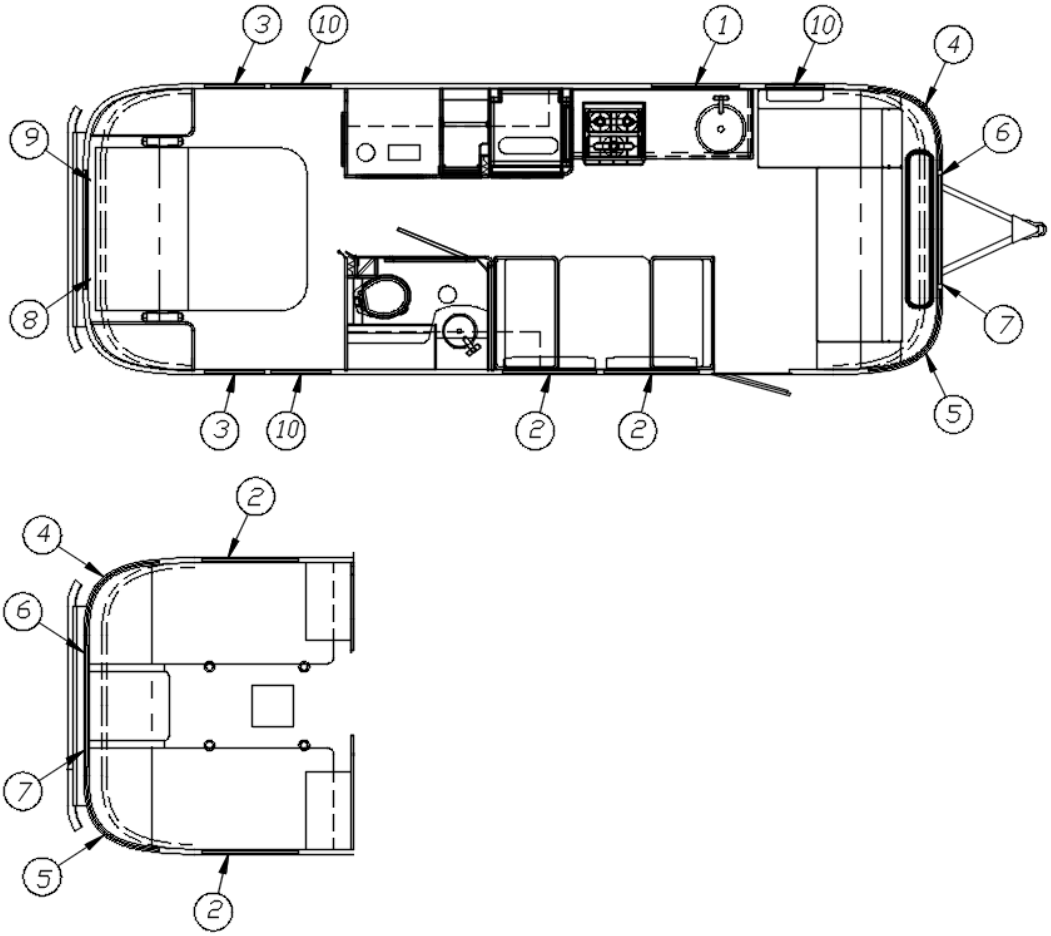

	110993	Window Coverings Install
	110993-02	Window Coverings Install, Twin
1.	703700-02	Shade, 32.5 x 24, Oceanair
2.	703700-04	Shade, 29.75 x 34, Oceanair
3.	703700-05	Shade, 19 x 34, Oceanair
4.	998144-01	Drape, CS aft panel, 29 x 24
5.	998144-09	Drape, CS side panel, 37 x 25.5
6.	998144-07	Drape, RS front panel, 27 x 29
7.	998144-05	Drape, CS front panel, 27 x 29
8.	998144-06	Drape, CS Rear panel, 30 x 29
9.	998144-08	Drape, RS Rear panel, 30 x 29
10.	703700-07	Shade, 17.75 x 34, Oceanair
	704199-01	Shade, 19.25 x 9.5, 1” rail, Ash Grey
	704199-02	Shade, 31.25 x 9.5, 1” rail, Ash Grey
	704120-01	Shade, Skylight, 14.5 x 22, Grey
	704120-02	Shade, Skylight, 19.25 x 20, Grey

2018 INTERNATIONAL
DRAPES AND SHADES

Drapes and Shades, 28’ Serenity

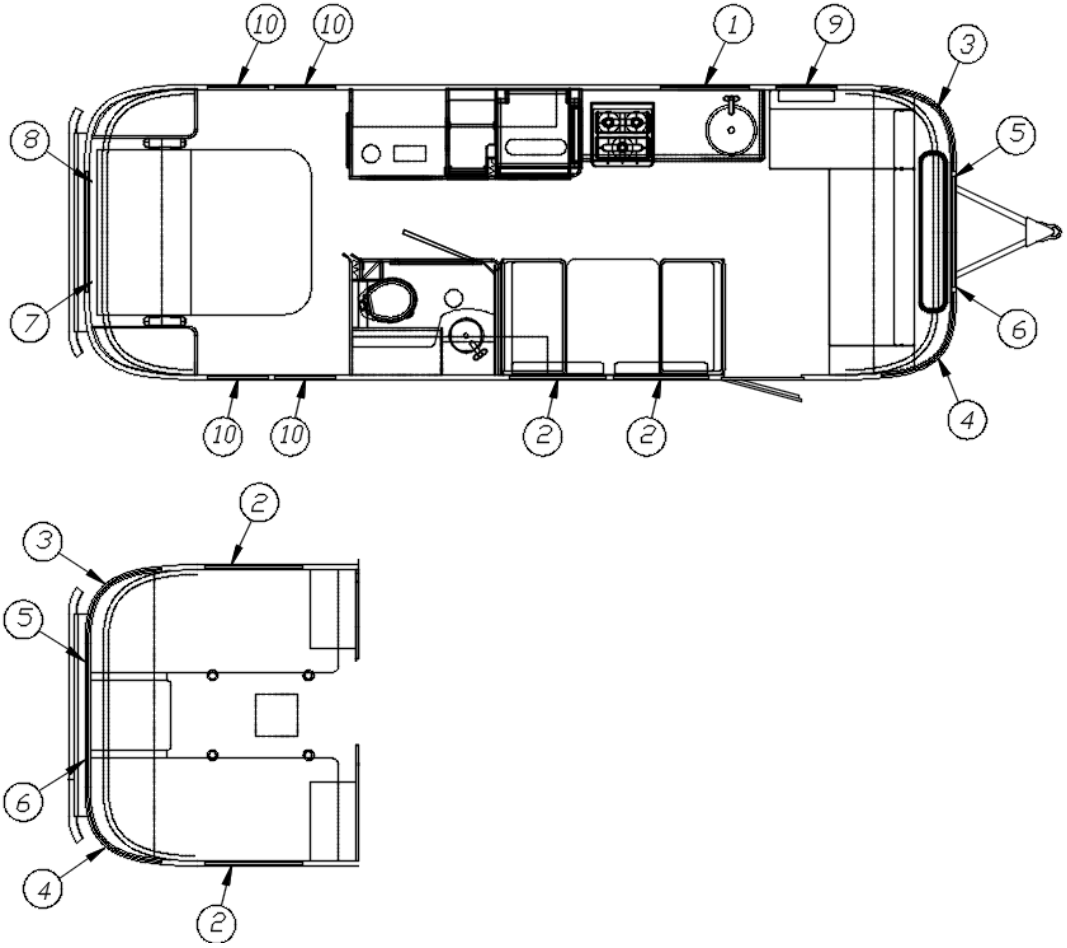

	111849	Window Coverings Install
	110993-02	Window Coverings Install, Twin
1.	703700-02	Shade, 32.5 x 24, Oceanair
2.	703700-04	Shade, 29.75 x 34, Oceanair
3.	998144-01	Drape, CS aft panel, 29 x 24
4.	998144-09	Drape, CS side panel, 37 x 25.5
5.	998144-07	Drape, RS front panel, 27 x 29
6.	998144-05	Drape, CS front panel, 27 x 29
7.	998144-06	Drape, CS rear panel, 30 x 29
8.	998144-08	Drape, RS rear panel, 30 x 29
9.	703700-07	Shade, 17.75 x 34, Oceanair
10.	998171-24	Drape, 27 x 34.5
	704199-01	Shade, 19.25 x 9.5, 1” rail, Ash Grey
	704199-02	Shade, 31.25 x 9.5, 1” rail, Ash Grey
	704120-01	Shade, Skylight, 14.5 x 22, Grey
	704120-02	Shade, Skylight, 19.25 x 20, Grey

2018 INTERNATIONAL
DRAPES AND SHADES

Drapes and Shades, 30’ Signature

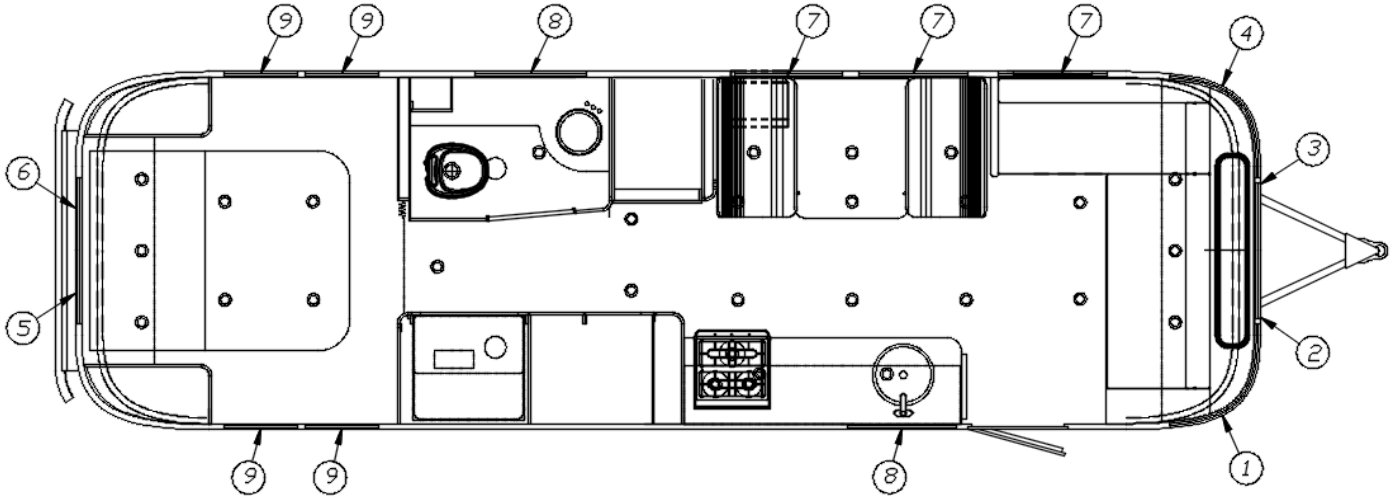

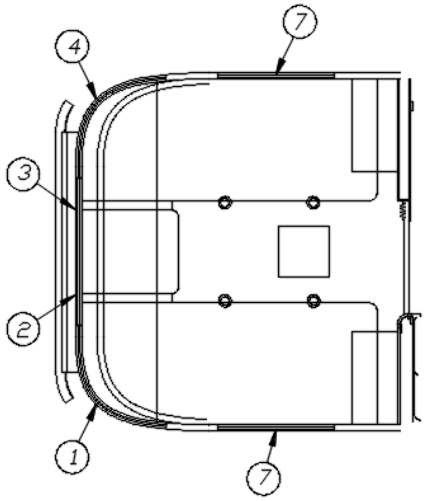

	111907	Window Coverings Install
	111907-02	Window Coverings Install, Twin
1.	998144-09	Drape, CS side panel, 37 x 25.5
2.	998144-05	Drape, CS front panel, 27 x 25.5
3.	998144-07	Drape, RS front panel, 27 x 25.5
4.	998144-11	Drape, RS side panel, 37 x 25.5
5.	998144-06	Drape, CS rear panel, 30 x 29
6.	998144-08	Drape, RS rear panel, 30 x 29
7.	703700-04	Shade, 29.75 x 34, Oceanair
8.	703700-02	Shade, 32.5 x 24, Oceanair
9.	703700-05	Shade, 19 x 34, Oceanair
	704199-02	Shade, 31.25 x 9.5, 1” rail, Ash Grey
	704120-01	Shade, Skylight, 14.5 x 22, Grey
	704120-02	Shade, Skylight, 19.25 x 20, Grey

2018 INTERNATIONAL
DRAPES AND SHADES

Drapes and Shades, 30’ Serenity

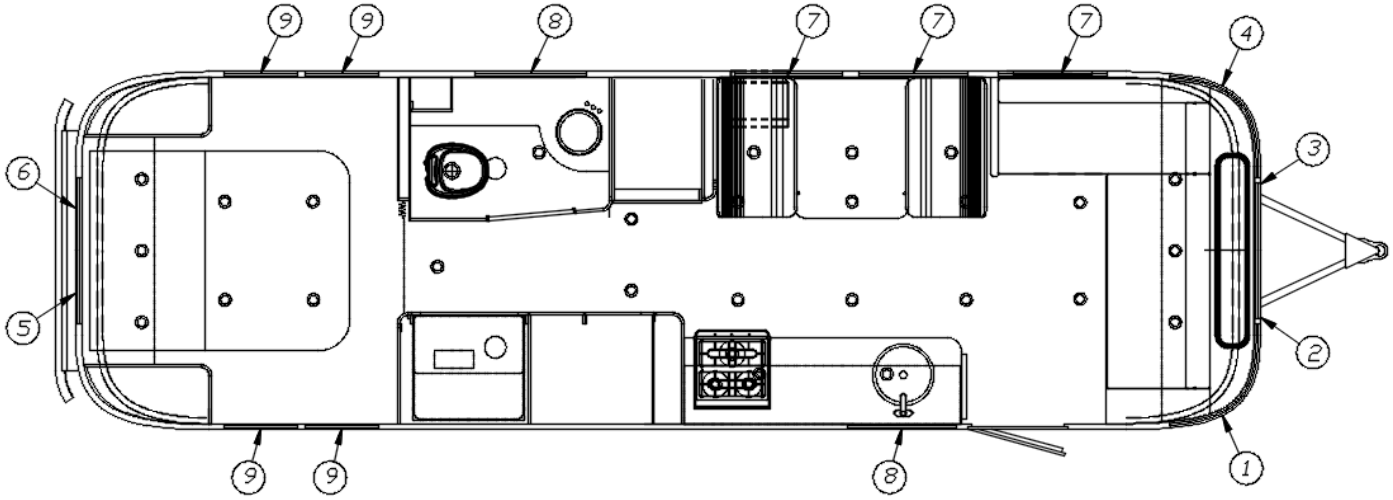

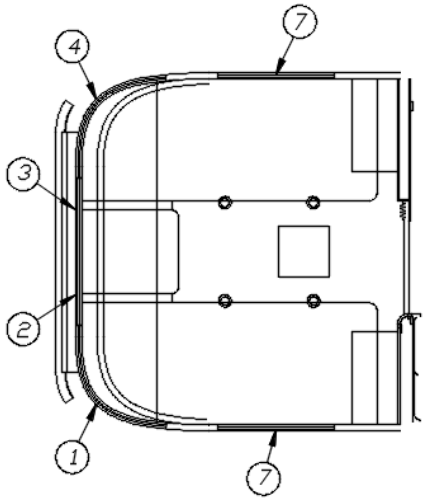

	111913	Window Coverings Install
	111907-02	Window Coverings Install, Twin
1.	998144-09	Drape, CS side panel, 37 x 25.5
2.	998144-05	Drape, CS front panel, 27 x 29
3.	998144-07	Drape, RS front panel, 27 x 29
4.	998144-11	Drape, RS side panel, 37 x 25.5
5.	998144-06	Drape, CS rear panel, 30 x 29
6.	998144-08	Drape, RS rear panel, 30 x 29
7.	703700-04	Shade, 29.75 x 34, Ocean Air
8.	703700-02	Shade, 32.5 x 24, Ocean Air
9.	998171-24	Drape, 27 x 34
	704199-02	Shade, 31.25 x 9.5, 1” rail, Ash Grey
	704120-01	Shade, Skylight, 14.5 x 22, Grey
	704120-02	Shade, Skylight, 19.25 x 20, Grey

Drapes and Shades Hardware

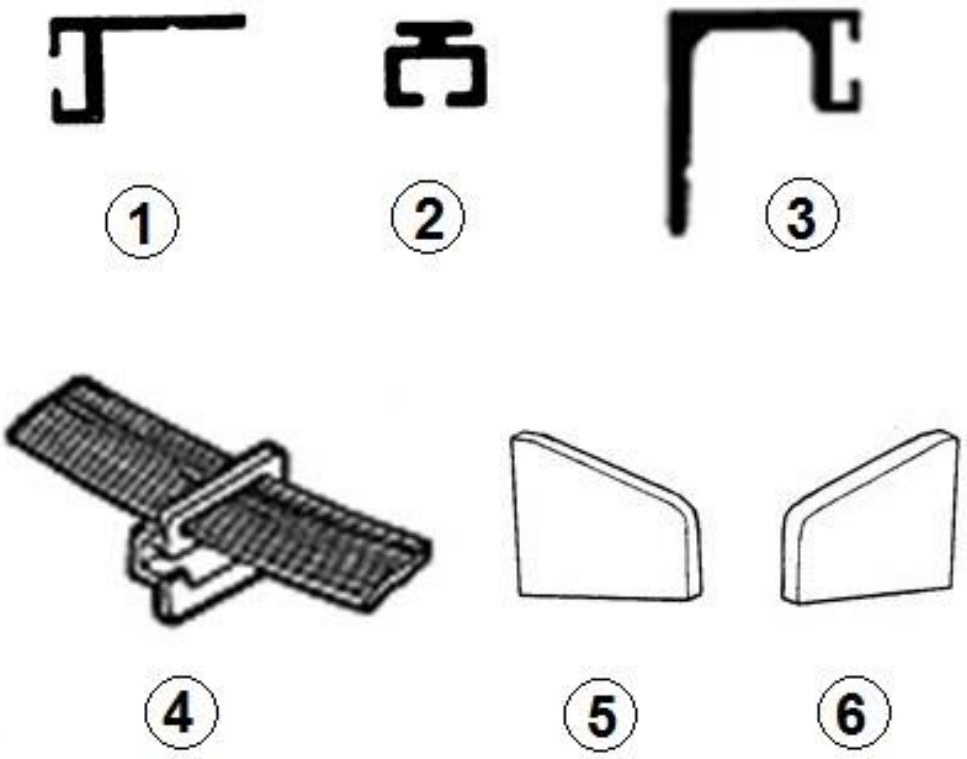

1.	101220	Bracket, Curtain stand off
2.	101217	Track, Curtain
3.	101225	Bracket, Curtain stand off
4.	700045	Glides w/elastic "G" type
5.	200785	End, Curtain track, LH
6.	200784	End, Curtain track, RH
	100099	Extrusion, Aluminum, Curtain track, Top
	703903	Fabric, Drapery, Wyeth Off White, A2GO
	704198	Fabric lining blackout, Ivory White
	700005	Fastener, Cap
	700006	Fastener, Socket
	700020	Pile Velcro
	700021	Hook, Velcro, White

2018 INTERNATIONAL
ELECTRICAL, 110 VOLT

Shoreline Cord and Inlet

513087-01	Power Cord w/swivel handle, 30A, 30', Gray, Marinco
513087-02	Power inlet, Male, 30A, 125V, Gray, Marinco
511149-05	Power cord, 50A, 36’, Gray
511149-02	Power inlet w/strain relief, 50A, Stainless Steel

Power Converters

513275	Power center, 30A AC, 55A DC, Black, NB
513283	Power center w/30A transfer switch, Black, WB
513285	Power center, 50A AC service w/15 DC circuits, Black
513286	Converter/charger used with 50A service, Deckmount

Breakers and Breaker Box

510564-04	Breaker, 20-20, Siemans, CSA
510564-09	Breaker, 15 Amp, Bryant
510564-2020	Breaker, Type BRD, BD 20-20
510564-3020	Breaker, Type BRD, BD 30-20
510564-20GFI	Breaker, Type BR, 20GFI
510663	Breaker, 30 Amp
510664	Breaker, Square D
510678	Breaker, Square D
511336	Breaker box
453573	Mounting bracket, Breaker box

Inverter

512680	Inverter w/remote, 1000W
512680-01	Fuse, 15A time-delay
512680-02	Connector, RJ 22 4P/4C
512680-03	Install tool for 512680-02
512680-100	Remote ON/OFF switch w/LED indicator
513161-01	Terminal fuse block w/100A fuse
513161-02	Fuse, MRBF 100 amp fuse
500039	Ground lug
512052	Power connector, 2 wires
512053	Power connector, 3 wires
511023	Tester, Circuit Analyzer, 3 Wire

2018 INTERNATIONAL
ELECTRICAL, 110 VOLT

Generator Prep

513087-02	Power inlet, Male, 30A, 125V, Gray, Marinco
385062	Decal, 110-125 Voltage, A/C
115155-01	Gen prep remote w/o switch

Junction Boxes

510014	Junction box, Octagon
511411	Junction box, 7 terminal
512308	Box, Shallow switch & outlet
510015	Box cover
510475	Clip, Ground
510741	Electrical box

Receptacles

500563-03	Receptacle, Self-contained, White
500563-04	Wall plate w/screws for 500563-03, White
512562	Receptacle gasket, Neoprene w/adhesive
511287	Receptacle, 15 amp, Single
512741	Water proof cover w/gasket, Gray
512481-01	Receptacle, 20 Amp, Single, White
512481-02	Receptacle, 20 Amp, Single, Brown
512481-03	Decorator cover plate w/screws, Brown
511534	Dual coax plate, White
512369	Receptacle, 15A SLG, White
512370	Wall plate, 1 gang, Single receptacle
512398	Power supply, Wall plate, White
511814-01	Receptacle, Duplex, Self-contained, Gray
511814-02	Plate, Decorator, 1 gang, Gray
510888-05	Receptacle w/cover, GFI, White
S00417	GFI Label for Receptacle, 510888-05
510888-06	Spacer, Receptacle, GFI, White
510888-07	Receptacle cover, White

2018 INTERNATIONAL
ELECTRICAL, 12 VOLT

Battery and Battery Box

511596	Battery, Deep cycle, Interstate SRM-24
511828	Battery, 12V deep cycle, AGM (when solar equipped)
410551-02	Battery box lid
500836-02	Positive battery cable, 72”
500837	Negative battery cable
203415	Battery tray
512049-01	Cable, Red jumper Bat. 6GA 7.75”
512049-02	Cable, Black jumper Bat. 6GA 7.75"

Battery Disconnect

513323-01	Bezel assembly, Black & Silver
511655-02	Relay, 100 amp, 12 volt
513323-03	Cable, BDO, 20’
513323-05	Cable, BDO, 30’

7-Way Cable and Breakaway Switch

500886-01	7-Way cable w/plug, 12’
0300027	Breakaway switch, Bargman
454526	Bracket, Breakaway switch

Tank Monitor System

512566	Monitor, Tank system kit, Seelevel
512566-01	Flush mount monitor panel only
512566-02	Sender pad

Solar Panel System

513247	Kit, Charge controller display
513047-01	Solar panel, 80 watt, Zamp
513047-02	Solar panel mounting feet, Zamp
513043	Triple port solar cap
513033	Bracket, Portable solar panel port
365407	Gasket, Solar box
365409	Gasket, Solar panel bracket
340305	Solar panel wire clip
340306	C-clamp, 5/8
340308	Clip, Solar panel

2018 INTERNATIONAL
ELECTRICAL, 12 VOLT

Breakers

510947-20	Breaker, 12V DC, Type II
510947-30	Breaker, 12V DC, Type II
510947-50	Breaker, 12V DC, Type II
510946-04	Bracket, 4-Position, Circuit breaker, 12V

Fuses

500883-01	Fuse 12, CSA 1 amp
512318	Holder w/1 amp AFC fuse, In-line
513161-01	Terminal fuse block w/100A fuse
513161-02	Fuse, MRBF 100 amp fuse
500773-10	Fuse, ATC, 12V DC, 10 Amp

Switches and USB Ports

512917	Switch, Slide dimmer, Dual
512709	Switch, Slide dimmer, 12V, Black
511731-01	Switch w/Red indicator light, Black
511975	Switch, 4 gang, Black
511977	Switch, SPDT, Black
511979	Switch, 3 gang, Black
511999	Switch, 2 gang, Black
510658	Switch w/weather proof boot
512480-01	Switch w/gas and electric start, Water heater, Black
512221	Lever switch, Microwave, 300V, 10A
512792	USB port pigtail
513133-01	USB, Front mount, Dual, Non-lighted, Black

Power Awning Cables

512652	Power cable, Relax awning
512649-01	Cable w/RG45 connectors, CAT5E, 23FB A2GO
512649-02	Cable w/RG45 connectors, CAT5E, 28’ A2GO

Wireless Backup Camera

512946-01	Digital wireless observation kit
512946-02	Voyager digital autopair camera
512946-102	Voyager 5.6” LCD monitor
512946-100	Antenna
365392	Gasket, Backup camera
382225	Grommet, .5”, Black
345674	Screw - M4x7x5 A2 S/S
345673	Washer - Flat M4 Black

2018 INTERNATIONAL
ELECTRICAL, 12 VOLT

Exterior Lights

512532	Patio light, 4” round, LED
510732-02	Utility light (by main door)
512409	License plate holder
512860	LED clearance light, Red
512860-01	Clearance light, Flat Chrome base
512928	Curved bezel w/gasket, Required for 3 top lights
512928-01	Curved bezel
512859	LED clearance light, Amber
512859-01	Clearance light, Flat Chrome base
382389	Clearance light gasket
512900	Amber marker/side turn light w/Chrome teardrop base, 30’
510112	Amber clearance light, Double bulb, CSA
511294	Light, License plate
512533	Auxiliary light, LED, Surface mount
994165	Entrance light above main door
101323	Casting, Step light, Polished Aluminum
201185	Lens, Step light
512490	Bulb, 25 Diode, Entry light
512918-02	LED flex light strip, 23CB, 23FB, 25’, 25FB
512918-03	LED flex light strip, 27FB, 28’, 30’

Interior Lights

512736	Light w/switch, LED, Single
512719	Reading light, Directional, LED, Nickel
512720	Spotlight, Surface mount, LED
512936	LED spot light w/frost lens
512478	Light, LED, Wet location
512403	Sconce w/black, Satin Nickel
512403-01	Sconce bulb, LED
512403-100	Satin Nickel ball
512462	Reading light w/frosted lens, LED

Taillight Assembly

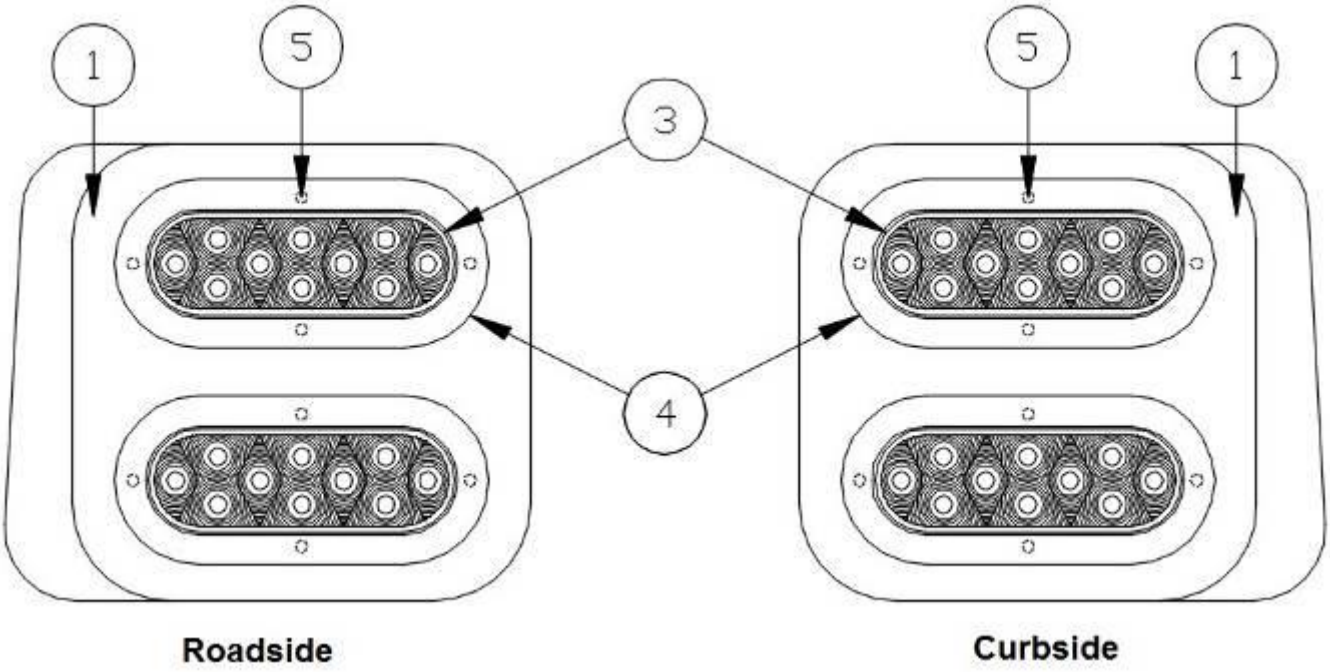

	952929-01	Taillight Assembly, LED, Roadside
	952929-02	Taillight Assembly, LED, Curbside
1.	511664-01	Taillight casting, Roadside
2.	511664-02	Taillight casting, Curbside
3.	*512425	6” oval LED tail light kit
4.	512425-02	Trim ring
5.	345473	Screw, #6 x 3/4”, Self-drilling
	512425-03	Gasket, Taillight
	115073-01	Bracket, Roadside taillight
	115073-02	Bracket, Curbside taillight
	115074	Bracket, Center taillight

*512425 Tail Light Kit Includes Tail Light, Trim Ring & Gasket.

2018 INTERNATIONAL
ENTERTAINMENT

Audio

512929	Radio, AM/FM/CD, Clarion
511807	Antenna, AM/FM, Rubber, 14"
511834	Patch cord, Male-male, 2-Way, 30'
511703	Patch cord, Male-male, 2-Way, 20'
512811	Speaker, 2-Way, 6.5”, Clarion
203599	Speaker spacer, 5/8”
511856	Wiring kit, 4 way flat, Ext. speaker
512024	Jack, Audio prep
511822	Powered sub-woofer, 6.5", Wedge
513234	USB input cable

Video

512657-01	Antenna, Omni-directional, White
500484-05	Antenna lead & extension, 72”
500484-04	Antenna lead & extension, 48"
500484-07	Antenna lead & extension, 144"
512398	Power supply, Wall plate, Amplifier w/2 TV hook-up
510612	Coax, 75 OHM, Standard
510623	Connector, Coax, Male-male
510616	“F” connector, Coax, 75 OHM
511827	Wall plate, Flush mount coax, White
510614	TV jack, 12 volt, Coax
513089	Dual inlet, TV/satellite, Gray
510654-01	TV jack, 12 volt w/splitter, White
511534	Dual coax plate, White
512406	RG6 hex compression connector, (Satellite Prewire)
512407	RG6 coax cable
513301-01	HDMI cable, Thin profile, 48”
513301-02	HDMI cable, Thin profile, 64”
513302	Wall plate w/HDMI & coax connections

2018 INTERNATIONAL
ENTERTAINMENT

Blu-Ray Player

512924	Blu-Ray disc player, Samsung
512499	Mini coax cable, 48”
512499-01	Mini coax cable, 64”
512366-20	HDMI cable, Male-male, 20’
512366-35	HDMI cable, Male-male, 35’
512561	HDMI right angle adapter, Right side

Flat Screen TV, 24”, Narrow Body Trailers

690681	LED HDTV, 24” Samsung
512526-01	Articulating arm
512499-01	Mini coax cable, 64”
381136	Spacer bumpers, TV bracket
340300	Clip, Cable holder
382184	Sleeve, Flexo braided split

Flat Screen TV, 28”, Wide Body Trailers

690669	LED HDTV, 28” Samsung
512656	TV bracket, Flush
512499	Cable, Mini coax, 48”
801946	Spacer, TV bracket
801946-15	Spacer, TV bracket, Serenity
382184	Sleeve, .75”, Flexo braided split

Bedroom TV, 24”, Wide Body Trailers

690682	LED HDTV, 24” Samsung
512457	Articulating Arm
511314	Universal bushing, 1” ID, Black
512499	Cable, Mini coax, 48”
512501	Splitter, HDMI pass through
340300	Clip, Cable holder
382184	Sleeve, Flexo braided split

2018 INTERNATIONAL
FLOOR COVERINGS

Floor Coverings

704302	Flooring, Comfort style, Linen, Tarkett
704121	Flooring, Vinyl Tarkett, Fresh Start, Serenity
703766-01	Adhesive, AAT 272 Super Premium
702665	Rug cushion, Non-slip
703852	Entrance mat w/Airstream logo
203594-02	Floor trim, Ash Grey
203727	Foil, Single bubble flex

Furniture and Cushion Batting

701538-01	Carpet, Econolier w/PSA backing

Doors, Roof Lockers, Signature

203749-01	Door, Plexiglass, 17.5”
203749-05	Door, Plexiglass, 11.75”
203749-08	Door, Plexiglass, 30”
203749-09	Door, Plexiglass, 26.25”

Doors, Roof Lockers, Serenity

203677-01	Door, 11.31 x 17.5
203677-02	Door, 11.31 x 26.25
203677-03	Door, 11.31 x 30
203677-05	Door, 11.31 x 11.75

Door, Foldette, 23CB

704166	Foldette door, 60 x 73, Black
704166-102	Strap, Clear plastic
381769	Track, Foldette door
701342-01	Strap, Bedroom door holdback
700005	Fastener, Cap
700006	Fastener, Socket

Door, Foldette, 23FB

704166	Foldette door, 60 x 73, Black
704166-102	Strap, Clear plastic
381890-01	Track, Formed
381890-02	Track, Straight
382056	Track
701342-01	Strap, Bedroom door holdback
700005	Fastener, Cap
700006	Fastener, Socket

Door, Foldette, 25’

704166	Foldette door, 60 x 73, Black
704166-102	Strap, Clear plastic
381890-01	Track, Formed
381890-02	Track, Straight

Door, Foldette, 25FB, 27FB

704166	Foldette door, 60 x 73, Black
704166-102	Strap, Clear plastic
381890-01	Track, Formed
381890-02	Track, Straight
701342-01	Strap, Bedroom door holdback
700005	Fastener, Cap
700006	Fastener, Socket

Door, Foldette, 28’, 30’

704166	Foldette door, 60 x 73, Black
704166-102	Strap, Clear plastic
382112	Track, Formed

2018 INTERNATIONAL
FURNITURE, DRAWER BOXES AND SLIDES

Drawer Boxes

964909-11	Drawer Box, 10" x 14” x 19”
968020-02	Drawer box, 5 x 9.88 x 15
968020-04	Drawer box, 5 x 15.13 x 15
968020-06	Drawer box, 5 x 11.38 x 15
968021-03	Drawer box, 2.75 x 15.63 x 15
968021-04	Drawer box, 2.75 x 23.88 x 15
968028-02	Drawer box, 8 x 15.81 x 21
968028-03	Drawer box, 8 x 10.13 x 21
968028-04	Drawer box, 8 x 10.13 x 18

Drawer Slides

381192	Drawer slide, 18"
381773-16	Drawer slide, 17.375"
381944-01	Slide, 18", Per set
381925	Drawer slide, 24"
381833-01	Slide, 18", Under-shelf
382203-03	Slide, Self-close, 15”
382203-04	Slide, Self-close, 18”
382203-05	Slide, Self-close, 21”
382203-06	Front fixing clips (Pr.)

Mirrors

372203-05	Mirror, Polished edges, 19 x 14
372203-15	Mirror, Polished edges, 17 x 25.25
372203-24	Mirror, Polished edges, 9.5 x 20
372203-26	Mirror, Polished edges, 13.62 x 58
372203-30	Mirror, Safety glass, 14 x 30
372203-33	Mirror, Safety glass, 14 x 40
371423-02	Mirror, Wall mount, Nickel
371423-01	Mirror retainer clip
381220-01	Mirror clip, Nickel Plate
381220-02	Mirror clip, Nickel Plate

2018 INTERNATIONAL
FURNITURE, BEDROOM

Bed, Queen, 23CB Signature

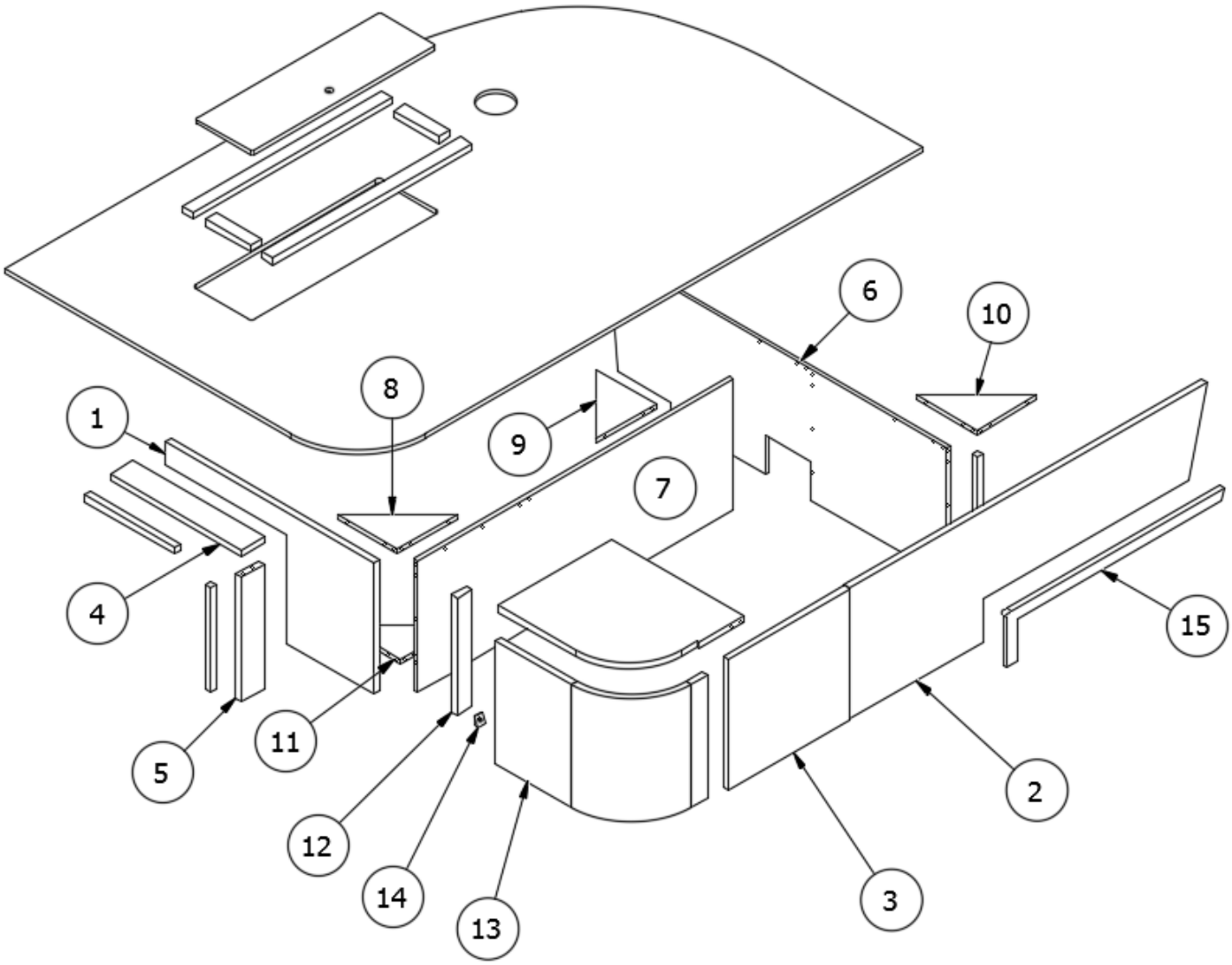

Parts Listed on Next Page

Bed, Queen, 23CB Signature

	966926	Corner Bed
1.	966926-1	Panel, 27.75 x 15.125
2.	966926-2	Panel, 47.63 x 15.125
3.	966926-3	Panel, 16.19 x 15.125
4.	966926-4	Panel, 17.5 x 3
5.	966926-5	Panel, 3 x 14.36
6.	966926-6	Panel, 44.75 x 15.125
7.	966926-7	Panel, 42 x 15.125
8.	966926-8	Panel, 8 x 8
9.	966926-9	Panel, 8 x 8
10.	966926-10	Panel, 8 x 8
11.	966926-11	Panel, 8 x 8
12.	966926-12	Panel, 2 x 13.5
13.	966925	Door, Radius, Bed
14.	203587	Wedge, Radius bed base door
15.	966926-30	Panel, 6.25 x 28.87
	381853	Piano hinge
	381948	K-catch
	382029-00	Handle bar, 7.48"
	203667	Storage bin, 23 x 16.75 x 12.38
	203439	Storage box, 17 x 11.13 x 6.38
	701538-01	Carpet, Econolier W/PSA back
	968115	Closeout, Bed plumbing

2018 INTERNATIONAL
FURNITURE, BEDROOM

Bed, Queen, 23CB Serenity

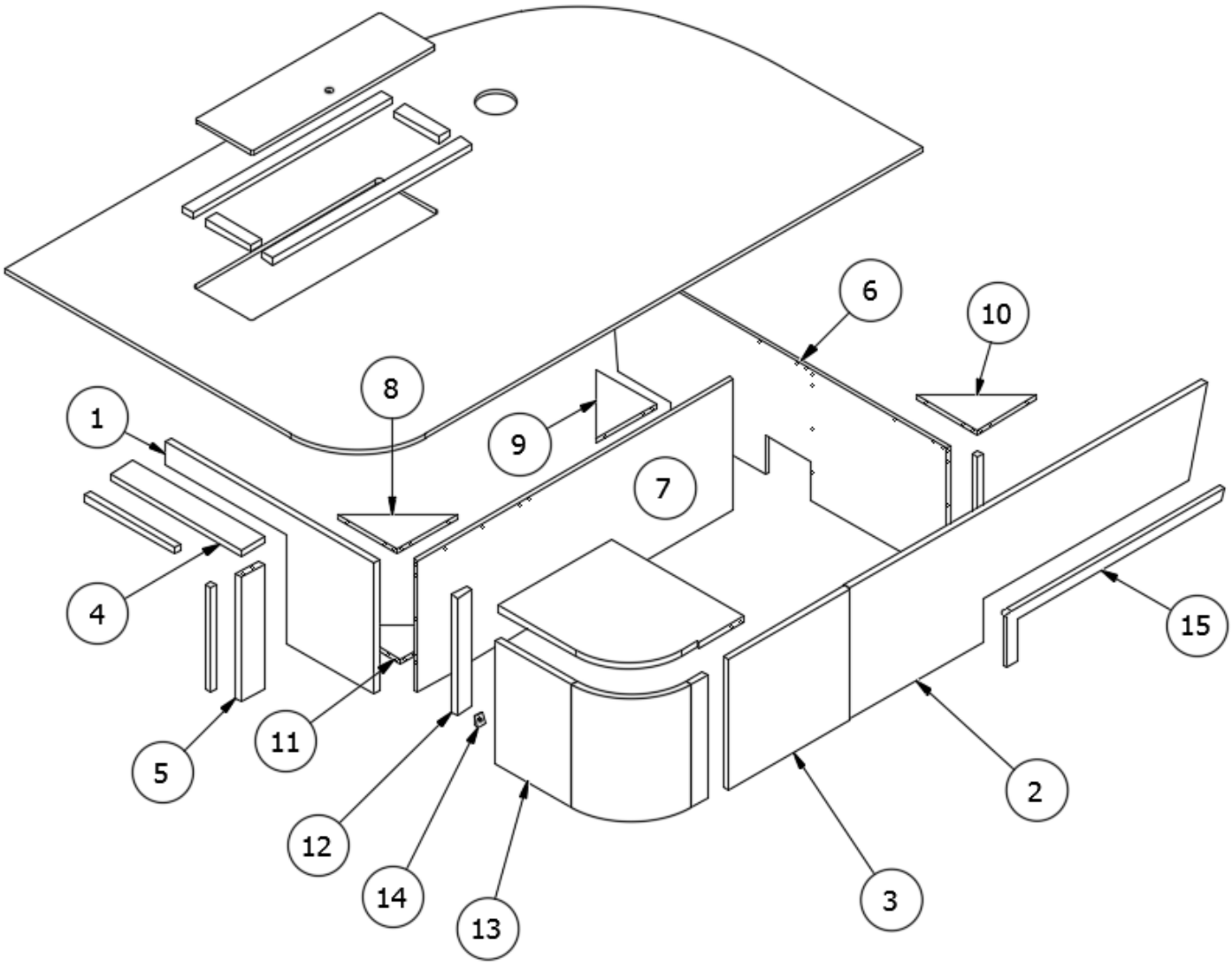

Parts Listed on Next Page

Bed, Queen, 23CB Serenity

	966926-15	Corner Bed
1.	966926-151	Panel, 27.75 x 15.125
2.	966926-152	Panel, 47.63 x 15.125
3.	966926-153	Panel, 16.19 x 15.125
4.	966926-154	Panel, 17.5 x 3
5.	966926-155	Panel, 3 x 14.36
6.	966926-6	Panel, 44.75 x 15.125
7.	966926-7	Panel, 42 x 15.125
8.	966926-8	Panel, 8 x 8
9.	966926-9	Panel, 8 x 8
10.	966926-10	Panel, 8 x 8
11.	966926-11	Panel, 8 x 8
12.	966926-12	Panel, 2 x 13.5
13.	966925-15	Door, Radius, Bed
14.	203587	Wedge, Radius bed base door
15.	966926-1530	Panel, 6.25 x 28.87
	381853	Piano hinge
	381948	K-catch
	382115	Pull, Flat, Black
	203667	Storage bin, 23 x 16.75 x 12.38
	203439	Storage box, 17 x 11.13 x 6.38
	701538-01	Carpet, Econolier w/PSA back
	968115-15	Closeout, Bed plumbing

2018 INTERNATIONAL
FURNITURE, BEDROOM

Bed, Queen, 23FB Signature

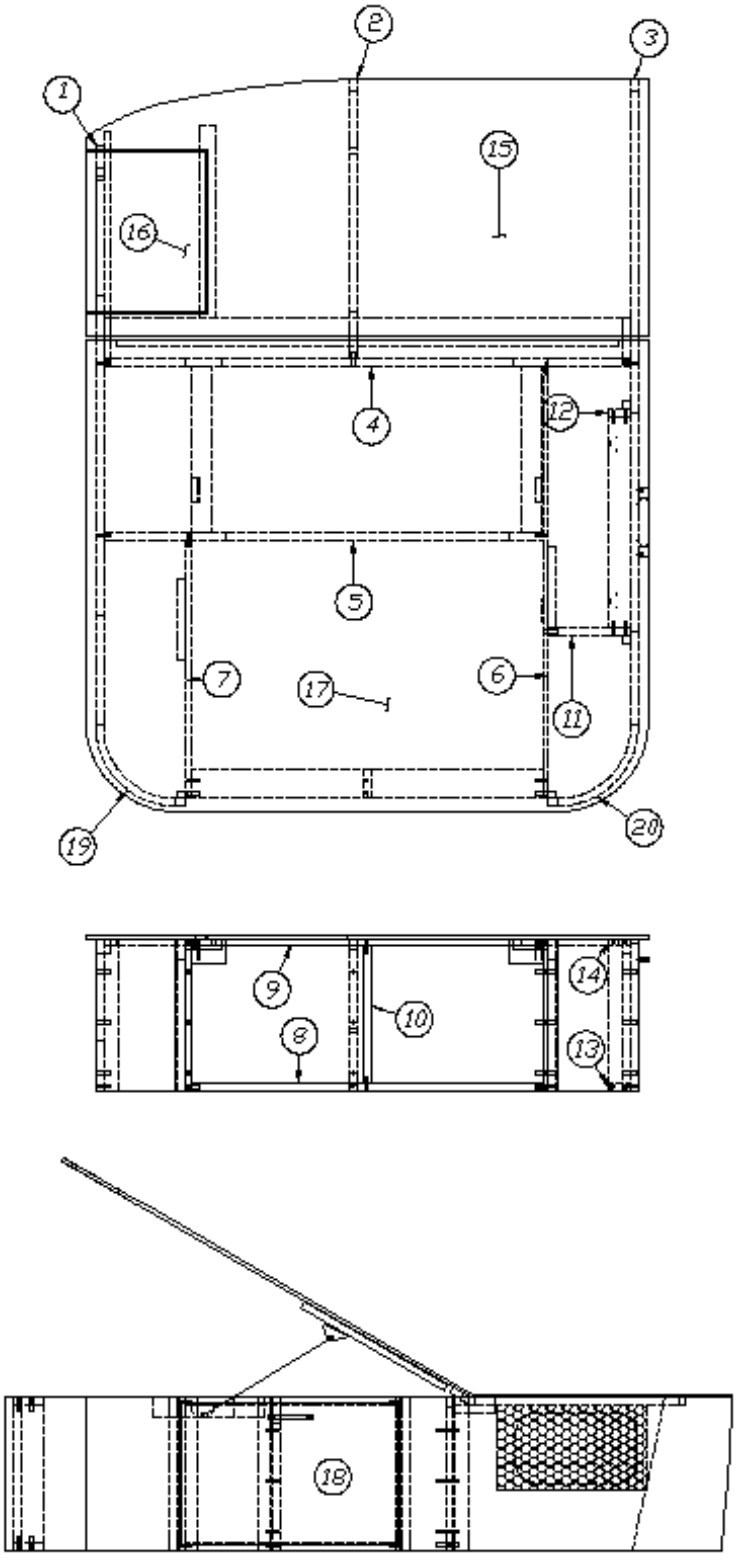

Parts Listed on Next Page

Bed, Queen, 23FB Signature

	967264	Bed
1.	967264-1	Panel, 15.13 x 46.62
2.	967264-2	Panel, 15.13 x 33.11
3.	967264-3	Panel, 15.13 x 33.11
4.	967264-4	Panel, 15.13 x 52.50
5.	967264-5	Panel, 15.13 x 43.81
6.	967264-6	Panel, 15.13 x 43
7.	967264-7	Panel, 15.13 x 25.75
8.	967264-8	Panel, 3 x 35.13
9.	967264-9	Panel, 3 x 35.13
10.	967264-10	Panel, 3 x 13.63
11.	967264-11	Panel, 8.19 x 15.13
12.	967264-12	Panel, 2.25 x 15.13
13.	967264-13	Panel, 21 x 2.25
14.	967264-14	Panel, 21 x 2.25
15.	967264-15I	Panel, 56 x 25.63
16.	967264-16	Panel, 16 x 120
17.	967264-17	Panel, 56 x 47
18.	967264-18	Door, 14.25” x 21.63”
19.	967200	Sub assembly, Bed corner
20.	967265	Sub assembly, Bed corner
	382029-03	Handle, 11.25”
	381607-11	Hinge, Self-close
	381228-02	Catch, Grabber door, (5lb Pull)
	380203-01	Piano hinge
	114812	Aluminum angle, 1” x 1”
	203664-01	Grille screen, Plastic
	115151	Angle, Bed support
	704131	Mattress, Pillowtop, 60” x 75”, Queen B
	203667	Storage bin, 23" x 16.75" x 12.38"
	381067-09	Gas spring, 90 LBS
	382463	Bracket, Upper
	382462	Bracket, Lower
	381084	Ball, Stud

2018 INTERNATIONAL
FURNITURE, BEDROOM

Bed, Queen, 23FB Serenity

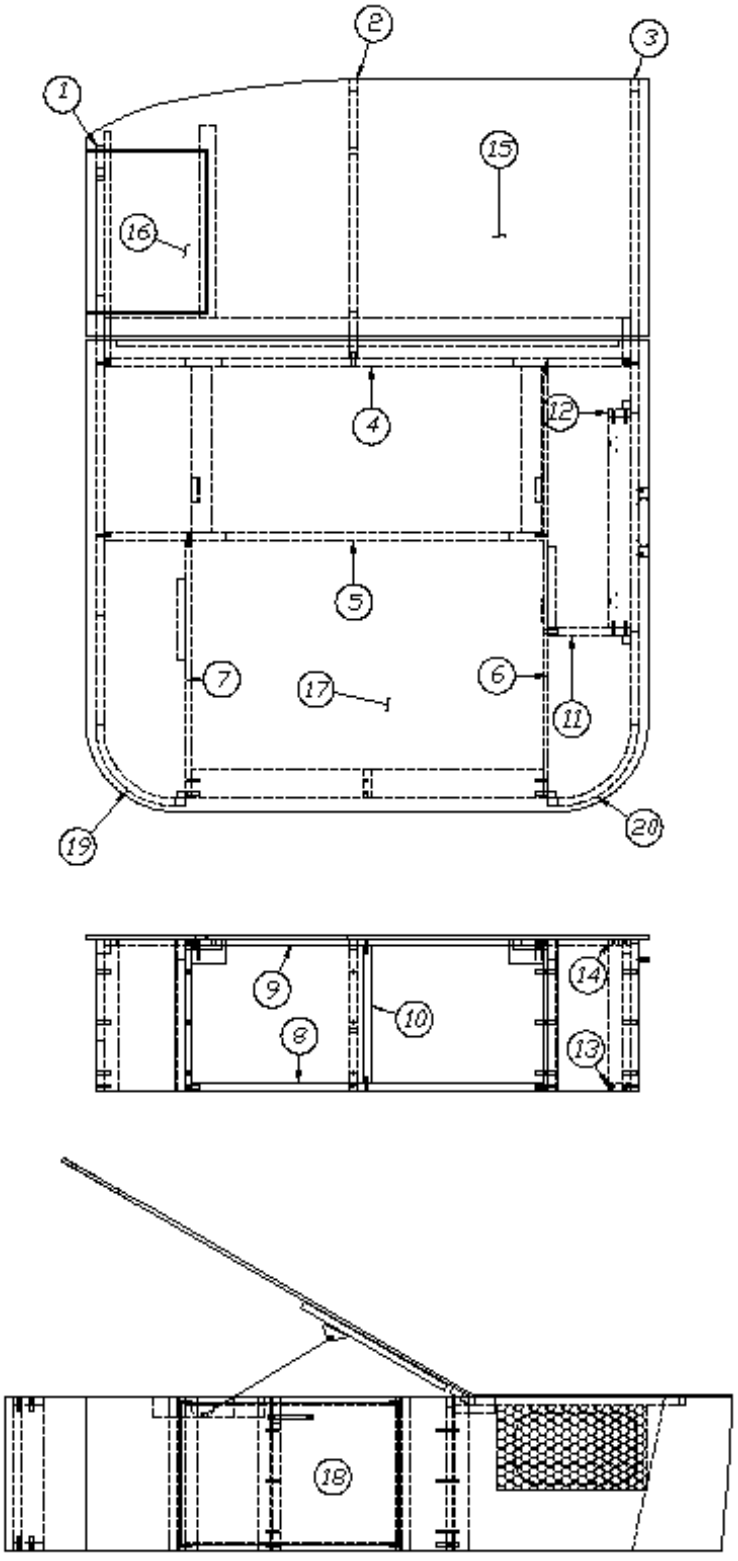

Parts Listed on Next Page

Bed, Queen, 23FB Serenity

	967264-15	Bed
1.	967264-151	Panel, 15.13 x 46.62
2.	967264-2	Panel, 15.13 x 33.11
3.	967264-153	Panel, 15.13 x 33.11
4.	967264-4	Panel, 15.13 x 52.50
5.	967264-5	Panel, 15.13 x 43.81
6.	967264-6	Panel, 15.13 x 43
7.	967264-7	Panel, 15.13 x 25.75
8.	967264-8	Panel, 3 x 35.13
9.	967264-9	Panel, 3 x 35.13
10.	967264-10	Panel, 3 x 13.63
11.	967264-11	Panel, 8.19 x 15.13
12.	967264-12	Panel, 2.25 x 15.13
13.	967264-13	Panel, 21 x 2.25
14.	967264-14	Panel, 21 x 2.25
15.	967264-15I	Panel, 56 x 25.63
16.	967264-16	Panel, 16 x 120
17.	967264-17	Panel, 56 x 47
18.	967264-1518	Door, 14.25” x 21.63”
19.	967200-15	Sub assembly, Bed corner
20.	967265-15	Sub assembly, Bed corner
	382115	Pull, Flat, Black
	381607-11	Hinge, Self-close
	381228-02	Catch, Grabber door, (5lb Pull)
	380203-01	Piano hinge
	114812	Aluminum angle, 1” x 1”
	203664-01	Grille screen, Plastic
	115151	Angle, Bed support
	704131	Mattress, Pillowtop, 60” x 75”, Queen B
	203667	Storage bin, 23" x 16.75" x 12.38"
	381067-09	Gas spring, 90 LBS
	382463	Bracket, Upper
	382462	Bracket, Lower
	381084	Ball, Stud

Bed, Queen, 25’ Signature

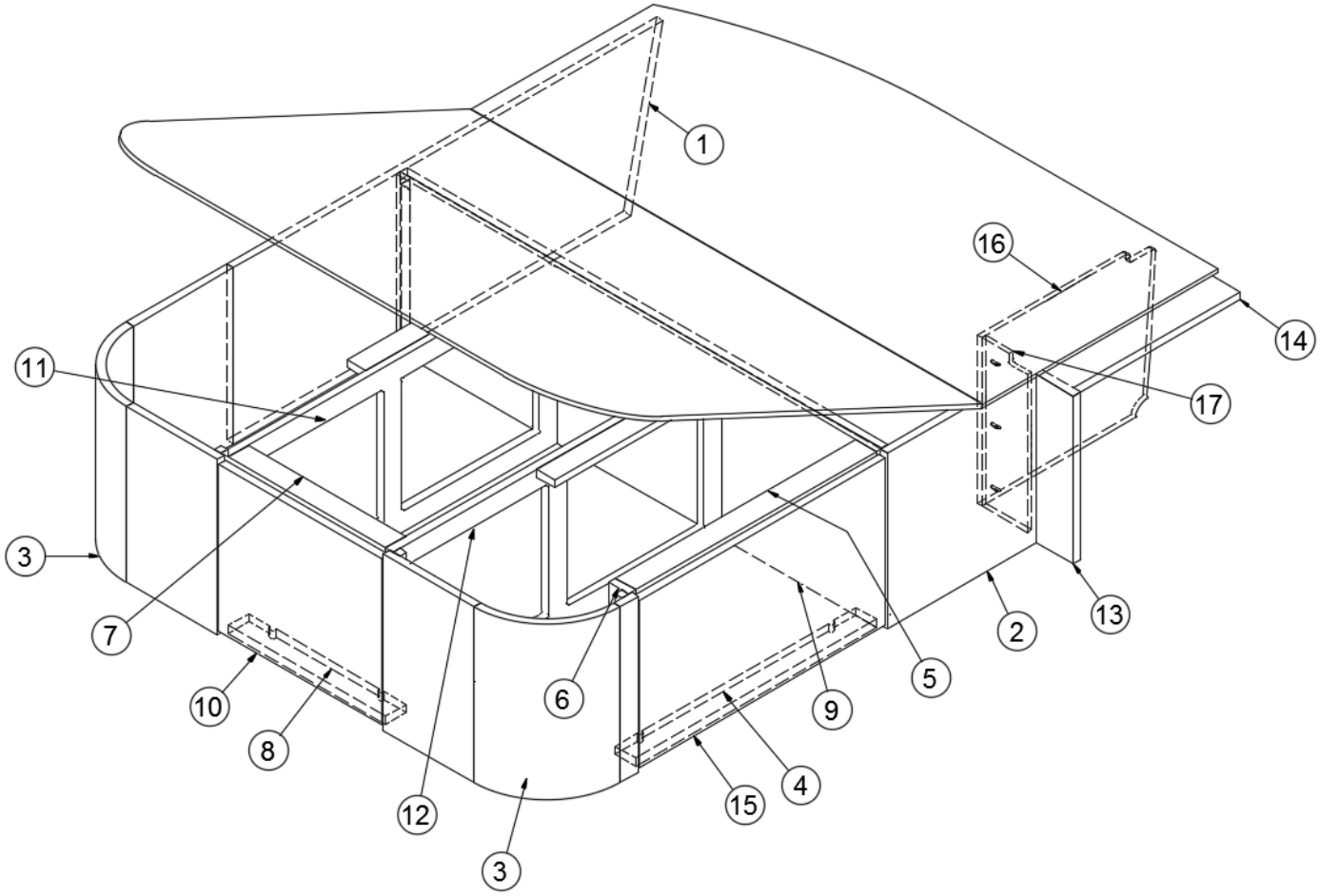

Parts Listed on Next Page

Bed, Queen, 25’ Signature

	967740	Bed
1.	967740-1	Panel, 46.94 x 16.63
2.	967740-2	Panel, 18.06 x 16.63
3.	966864	Corner sub assembly
4.	967740-4	Panel, 2.25 x 26.31
5.	967740-5	Panel, 2.25 x 26.31
6.	967740-6	Panel, 16.63 x 2.25
7.	967740-7	Panel, 2.25 x 17.25
8.	967740-8	Panel, 2.25 x 17.25
9.	967740-11	Panel, 16.63 x 52.5
10.	967740-19	Door, 17.88 x 15.75
11.	967740-31	Panel, 36 x 16.63
12.	967740-32	Panel, 36 x 16.63
13.	967740-38	Panel, 4 x 15.88
14.	967740-39	Panel, 4 x 18.25
15.	967740-40	Door, 26.63 x 15.75, Bed Base
16.	967740-41	Closeout 19.04 X 15.83
17.	967740-42	Extension, 15.88 x 5
	114812	Aluminum angle, 1 x 1
	380203-01	Piano hinge
	382029-05	Handle bar, 21.33"
	381607-11	Hinge, Self-close
	381228-02	Catch, Grabber door, (5lb Pull)
	704131	Mattress, Pillowtop, 60” x 75”, Queen B
	203419	Storage box, 23" x 16.75" x 11.88”
	203439	Storage box, 17" x 11.13" x 6.38"
	381067-09	Gas spring, 90 LBS
	382463	Bracket, Upper
	382462	Bracket, Lower
	381084	Ball, Stud
	112671-18	Vinyl, Under Bed Storage

2018 INTERNATIONAL
FURNITURE, BEDROOM

Bed, Queen, 25’ Serenity

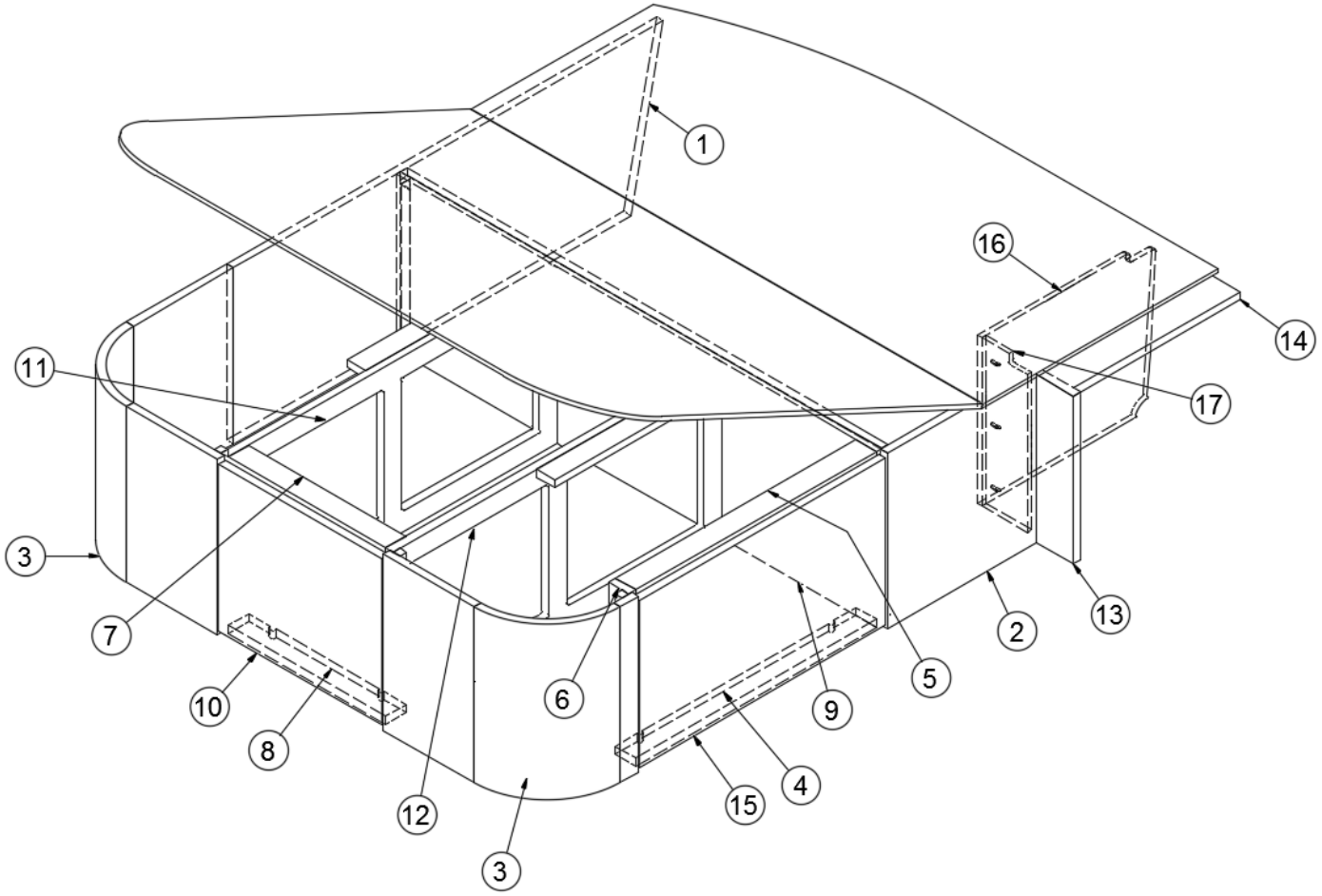

Parts Listed on Next Page

Bed, Queen, 25’ Serenity

	967740-15	Bed
1.	967740-151	Panel, 43.94 x 16.63
2.	967740-152	Panel, 18.5 x 16.63
3.	966864-15	Corner sub assembly
4.	967740-154	Panel, 2.25 x 26
5.	967740-5	Panel, 2.25 x 26
6.	967740-6	Panel, 16.63 x 2.25
7.	967740-7	Panel, 2.25 x 17.25
8.	967740-8	Panel, 2.25 x 17.25
9.	967740-11	Panel, 16.63 x 52.5
10.	967740-19	Door, 17.88 x 15.75
11.	967740-31	Panel, 36 x 16.63
12.	967740-32	Panel, 36 x 16.63
13.	967740-1538	Panel, 4 x 15.88
14.	967740-1539	Panel, 4 x 18.25
15.	967740-1540	Door, 26.63 x 15.75
16.	967740-41	Closeout 19.04 x 15.83
17.	967740-42	Extension, 15.88 x 5
	382115	Pull, Flat, Black
	381607-11	Hinge, Self-close
	381228-02	Catch, Grabber door, (5lb Pull)
	380203-01	Piano hinge
	114812	Aluminum angle 1 x 1
	704131	Mattress, Pillowtop, 60” x 75”, Queen B
	203419	Storage box, 23" x 16.75" x 11.88”
	203439	Storage box, 17" x 11.13" x 6.38"
	381067-09	Gas spring, 90 LBS
	382463	Bracket, Upper
	382462	Bracket, Lower
	381084	Ball, Stud
	112671-18	Vinyl, Under Bed Storage

2018 INTERNATIONAL
FURNITURE, BEDROOM

Bed, Queen, 25FB Signature

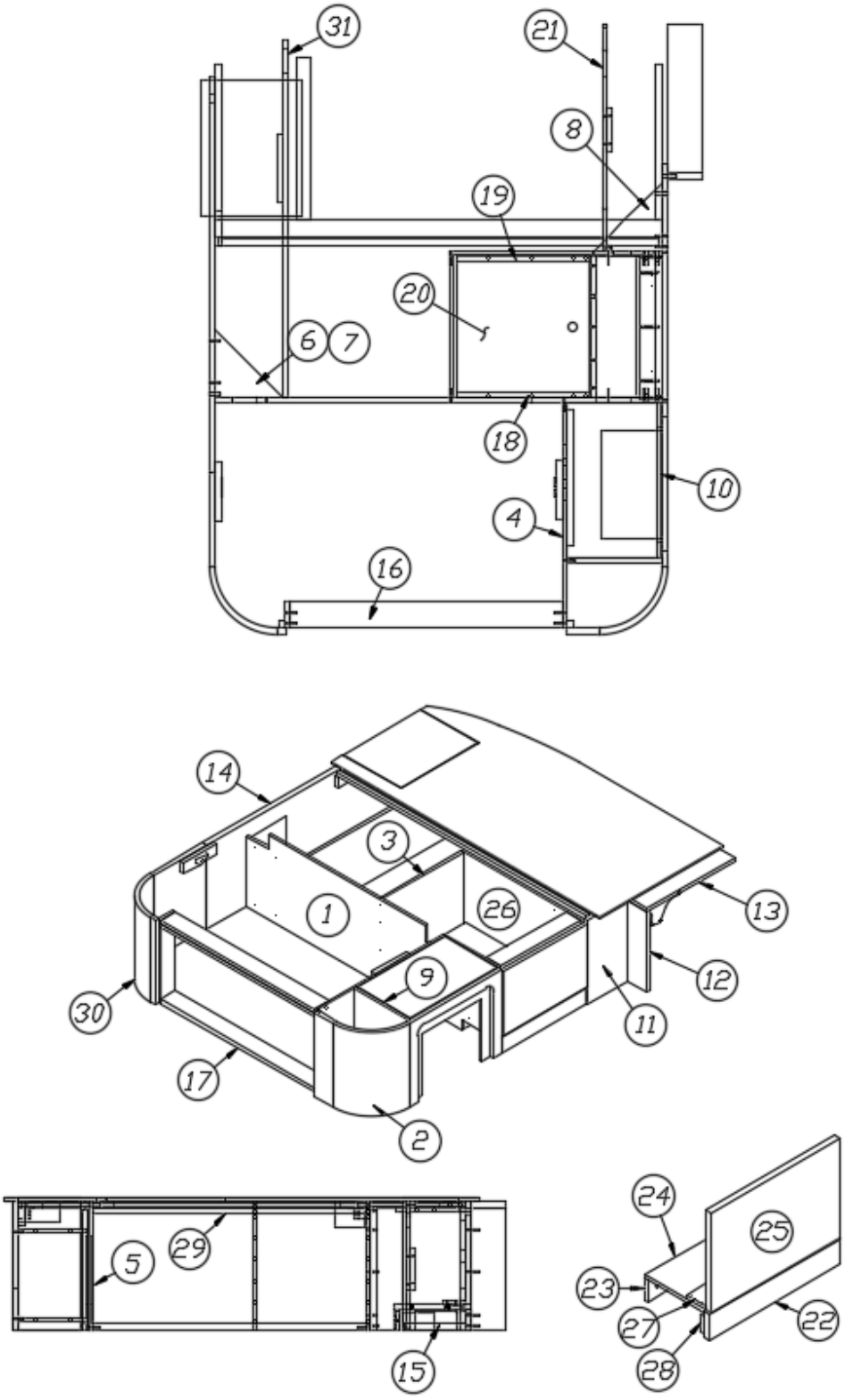

Parts Listed on Next Page

Bed, Queen, 25FB Signature

	967072	Bed
1.	967072-1	Panel, 15.13 x 52.5
2.	967069	Radius assembly, Aft
3.	967072-3	Panel, 16.75 x 15.13
4.	967072-4	Panel, 26.5 x 15.13
5.	967072-5	Panel, 3 x 15.13
6.	967072-6	Panel, 8 x 8, Triangle
7.	967072-7	Panel, 8 x 8, Triangle
8.	967072-8	Panel, 8 x 8, Triangle
9.	967072-11	Panel, 11.19 x 15.13
10.	967072-12	Panel, 11 x 18.25
11.	967072-13	Panel, 10.31 x 15.13
12.	967072-14	Panel, 4 x 14.38
13.	967072-15I	Panel, 4 x 18.25
14.	967072-16	Panel, 46.62 x 15.13
15.	967072-18	Panel, 2.5 x 16.75
16.	967072-19I	Panel, 3 x 32.13
17.	967072-20	Panel, 3 x 32.13
18.	967072-43	Panel, 2.25 x 15.5
19.	967072-44	Panel, 2.25 x 15.5
20.	967072-45	Panel, 16.5 x 15.5
21.	967072-46	Panel, 25.625 x 15
22.	967072-48	Panel, 17.5 x 3
23.	967072-49	Panel, 16.75 x 2.53
24.	967072-50	Panel, 16.75 x 7.776
25.	967072-51	Panel, 17.375 x 11.5
26.	967072-52	Panel, 25 x 15.125
27.	967072-54	Panel, 16.75 x 2.5
28.	967072-55	Panel, 16.75 x 2.2
29.	967072-56	Panel, 3 x 32.13
30.	967070	Radius assembly, Forward
31.	967071	Wiring closeout
	967072-17	Panel, 3 x 16.75
	986715	Gas Spring
	380203-01	Piano hinge
	115151	Angle, Bed support, 43"
	381607-11	Hinge, Self-close
	382029-04	Handle bar, 15"
	381228-02	Catch, Grabber Door, (5lb Pull)
	201016	Drawer, 16 x 22
	203439	Storage box, 17" x 11.13" x 6.38"
	112671-05	Vinyl, Under Bed Storage

2018 INTERNATIONAL
FURNITURE, BEDROOM

Bed, Queen, 25FB Serenity

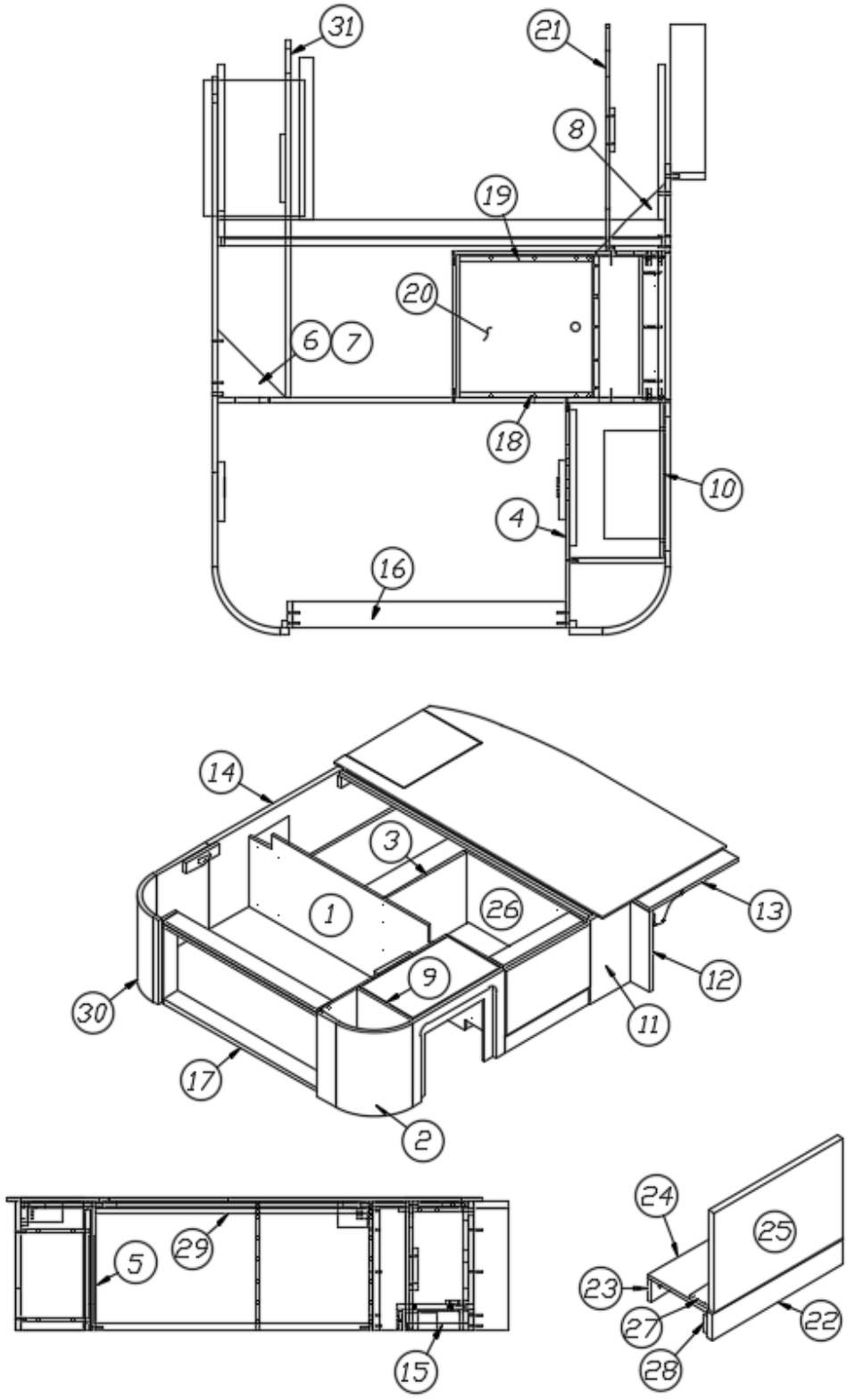

Parts Listed on Next Page

Bed, Queen, 25FB Serenity

	967072-15	Bed
1.	967072-1	Panel, 15.13 x 52.5
2.	967069-15	Radius assembly, Aft
3.	967072-3	Panel, 16.75 x 15.13
4.	967072-4	Panel, 26.5 x 15.13
5.	967072-5	Panel, 3 x 15.13
6.	967072-6	Panel, 8 x 8, Triangle
7.	967072-7	Panel, 8 x 8, Triangle
8.	967072-8	Panel, 8 x 8, Triangle
9.	967072-11	Panel, 11.19 x 15.13
10.	967072-12	Panel, 11 x 18.25
11.	967072-1513	Panel, 10.31 x 15.13
12.	967072-1514	Panel, 4 x 14.38
13.	967072-1515	Panel, 4 x 18.25
14.	967072-1516	Panel, 46.62 x 15.13
15.	967072-18	Panel, 2.5 x 16.75
16.	967072-1519	Panel, 3 x 32.13
17.	967072-20	Panel, 3 x 32.13
18.	967072-1543	Panel, 2.25 x 15.5
19.	967072-1544	Panel, 2.25 x 15.5
20.	967072-1545	Panel, 16.5 x 15.5
21.	967072-46	Panel, 25.625 x 15
22.	967072-1548	Panel, 17.5 x 3
23.	967072-49	Panel, 16.75 x 2.53
24.	967072-1550	Panel, 16.75 x 7.776
25.	967072-1551	Panel, 17.375 x 11.5
26.	967072-52	Panel, 25 x 15.125
27.	967072-1554	Panel, 16.75 x 2.5
28.	967072-55	Panel, 16.75 x 2.2
29.	967072-56	Panel, 3 x 32.13
30.	967070-15	Radius assembly, Forward
31.	967071	Wiring closeout
	967072-17	Panel, 3 x 16.75
	986715	Gas Spring
	380203-01	Piano hinge
	115151	Angle, Bed support, 43"
	381607-11	Hinge, Self-close
	382115	Pull, Flat, Black
	381228-02	Catch, Grabber door, (5lb Pull)
	201016	Drawer, 16 x 22
	203439	Storage box, 17" x 11.13" x 6.38"
	112671-04	Vinyl, Under Bed Storage

2018 INTERNATIONAL
FURNITURE, BEDROOM

Bed, Queen, 27FB, 28', 30', Signature

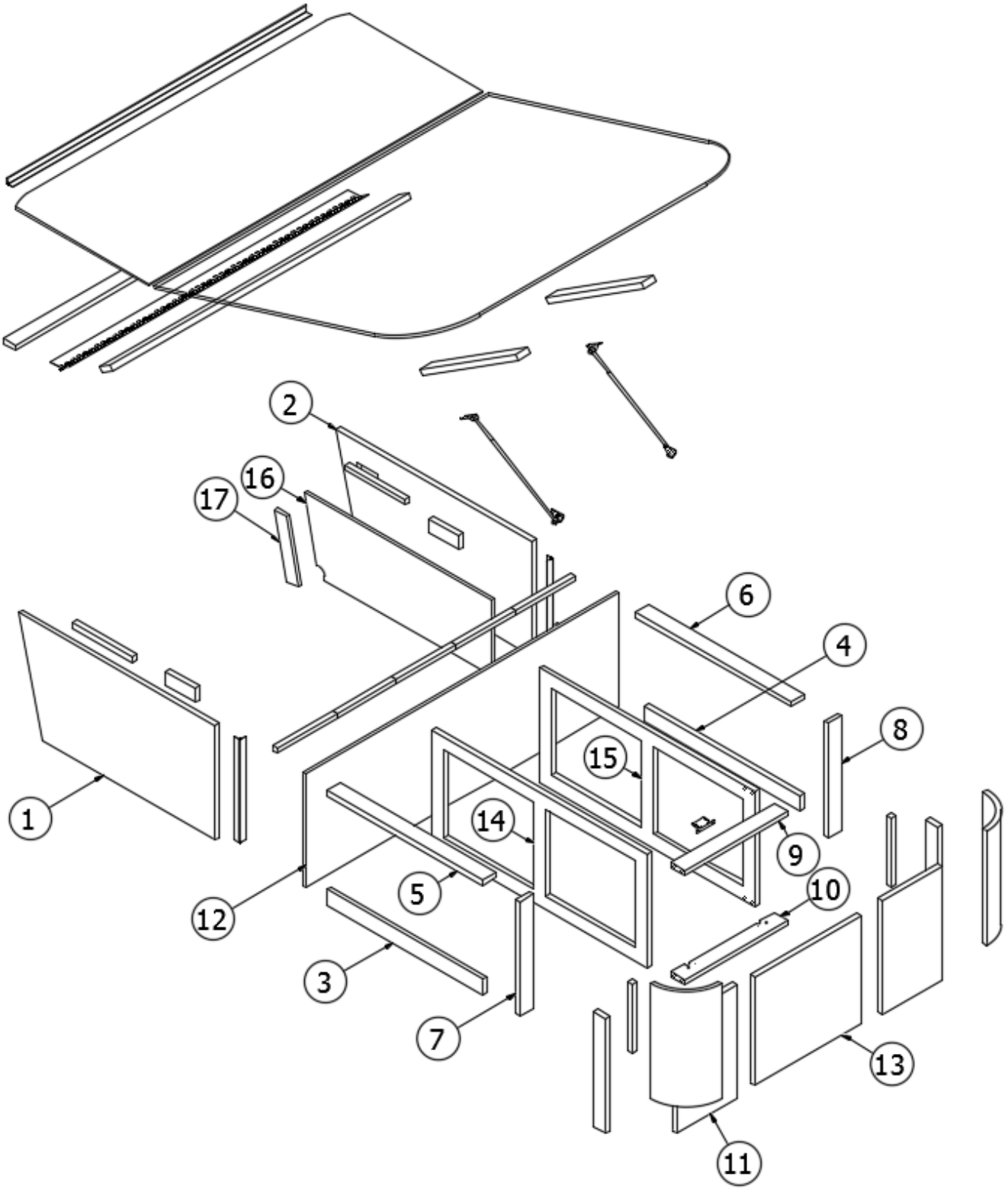

Parts Listed on Next Page

Bed, Queen, 27FB, 28’, 30’, Signature

	966863	Bed
1.	966863-1	Panel, 32.75 x 16.63
2.	966863-2	Panel, 32.75 x 16.63
3.	966863-3	Panel, 2.25 x 26
4.	966863-4	Panel, 2.25 x 26
5.	966863-5	Panel, 2.25 x 26
6.	966863-6	Panel, 2.25 x 26
7.	966863-7	Panel, 16.63 x 2.25
8.	966863-8	Panel, 16.63 x 2.25
9.	966863-9	Panel, 2.25 x 17.25
10.	966863-10	Panel, 2.25 x 17.25
11.	966864	Sub assembly, Bed corner
12.	966863-13	Panel, 16.63 x 52.5
13.	966863-21	Door, 17.88 x 15.75
14.	966863-33	Panel, 36 x 16.63
15.	966863-34	Panel, 36 x 16.63
16.	966863-37	Panel, 11 x 31.44
17.	966863-39	Panel, 9.75 x 2
	382029-04	Handle bar, 15
	381607-11	Hinge, Self-close
	381228-02	Catch, Grabber door, (5lb Pull)
	381067-09	Gas spring, 90 LBS
	365364-02	Edgebanding, .024 x 1.125, Ebony Woods
	380203-01	Piano hinge
	201016	Drawer, 16 x 22
	114812	Aluminum angle, 1 x 1
	203667	Storage bin, 23 x 16.75 x 12.38
	203439	Storage box, 17 x 11.13 x 6.38
	112671-14	Vinyl, Under Bed Storage

2018 INTERNATIONAL
FURNITURE, BEDROOM

Bed, Queen, 27FB, 28', 30', Serenity

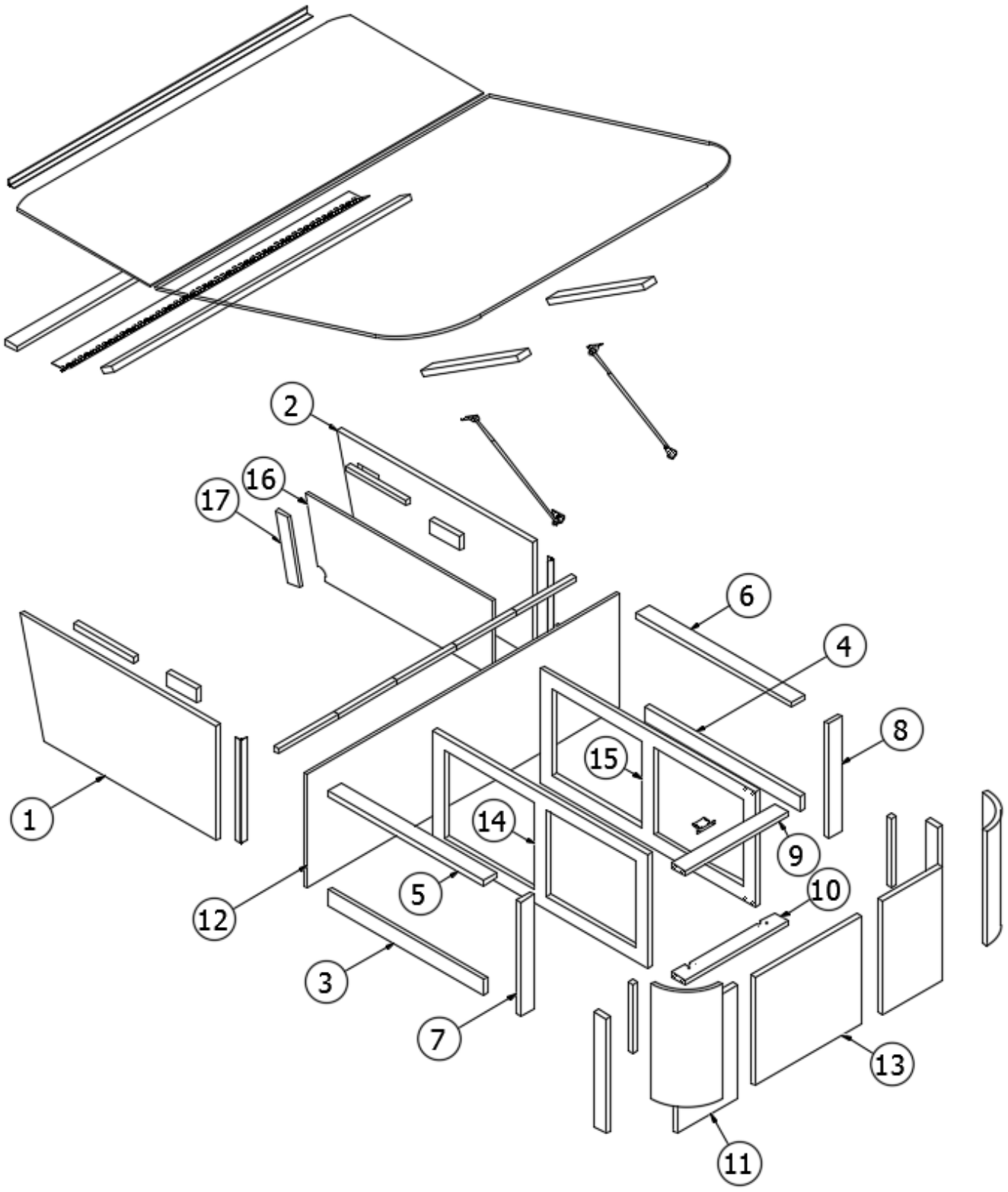

Parts Listed on Next Page

2018 INTERNATIONAL
FURNITURE, BEDROOM

Bed, Queen, 27FB, 28’, 30’, Serenity

	966863-15	Bed
1.	966863-151	Panel, 32.75 x 16.63
2.	966863-152	Panel, 32.75 x 16.63
3.	966863-153	Panel, 2.25 x 26
4.	966863-154	Panel, 2.25 x 26
5.	966863-5	Panel, 2.25 x 26
6.	966863-6	Panel, 2.25 x 26
7.	966863-7	Panel, 16.63 x 2.25
8.	966863-8	Panel, 16.63 x 2.25
9.	966863-9	Panel, 2.25 x 17.25
10.	966863-10	Panel, 2.25 x 17.25
11.	966864-15	Sub assembly, Bed corner
12.	966863-13	Panel, 16.63 x 52.5
13.	966863-1521	Door, 17.88 x 15.75
14.	966863-33	Panel, 36 x 16.63
15.	966863-34	Panel, 36 x 16.63
16.	966863-37	Panel, 11 x 31.44
17.	966863-39	Panel, 9.75 x 2
	365344-02	Edgebanding, .94, Pearl Bisque
	381607-11	Hinge, Self-close
	382115	Pull, Flat, Black
	381228-02	Catch, Grabber door, (5lb Pull)
	114812	Aluminum angle, 1 x 1
	381067-09	Gas spring, 90 LBS
	380203-01	Piano hinge
	201016	Drawer, 16 x 22
	203667	Storage bin, 23 x 16.75 x 12.38
	203439	Storage box, 17 x 11.13 x 6.38
	112671-14	Vinyl, Under Bed Storage

2018 INTERNATIONAL
FURNITURE, BEDROOM

Bed, Twin, CS 25', RS 25FB, Signature

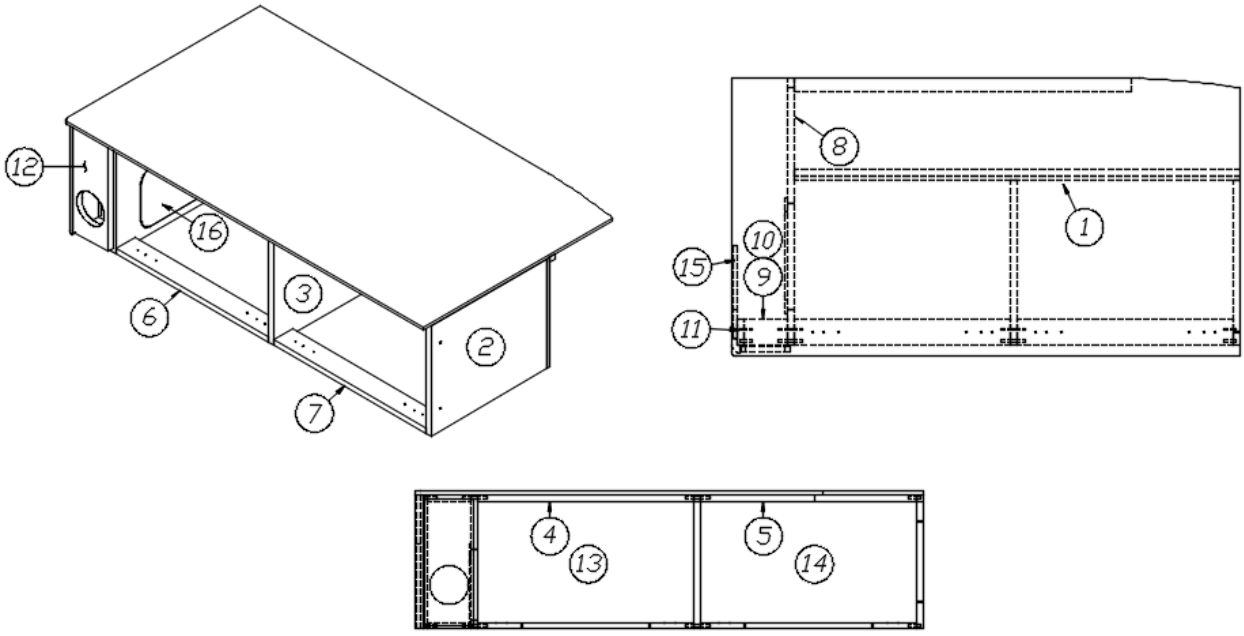

	966913	Twin Bed
1.	966913-1	Panel, 15.13 x 50.25
2.	966913-2	Panel, 18.5 x 15.13
3.	966913-3	Panel, 18.5 x 15.13
4.	966913-4	Panel, 3 x 24.38
5.	966913-5	Panel, 3 x 24.38
6.	966913-6	Panel, 3 x 24.38
7.	966913-7	Panel, 3 x 24.38
8.	966913-8	Panel, 30 x 15.13
9.	966913-9	Panel, 3 x 4.94
10.	966913-10	Panel, 3 x 4.94
11.	966913-11	Panel, 3 x 15.13
12.	966913-12	Panel, 5.56 x 14.25
13.	966913-13	Door, 25 x 14.25
14.	966913-14	Door, 25 x 14.25
15.	966913-15I	Panel, 10.5 x 15.13
16.	966913-25	Panel, 7.94 x 11.94
	381607-11	Hinge, Self-close
	382029-05	Handle bar, 21.33"
	381228-02	Catch, Grabber door
	801706-0024	Corner trim, 90°, 1" radius, Ebony Woods
	112671-04	Vinyl, Under Bed Storage

2018 INTERNATIONAL
FURNITURE, BEDROOM

Bed, Twin, CS 25', RS 25FB, Serenity

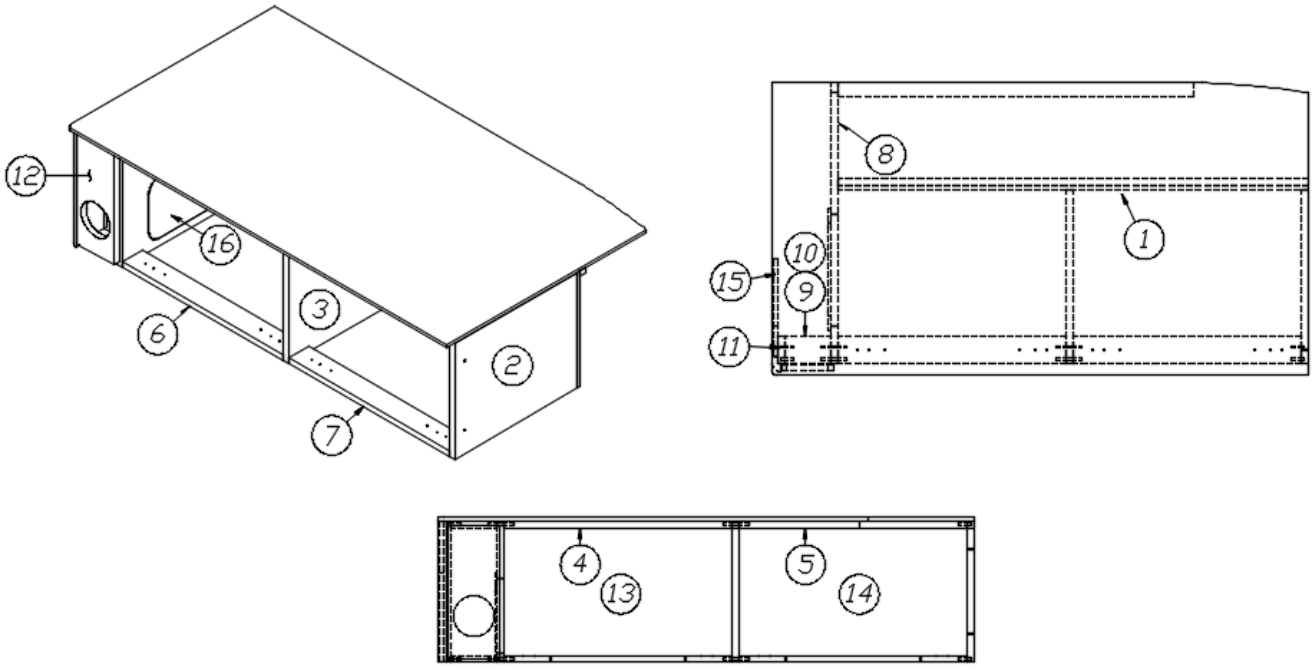

	966913-15	Twin Bed
1.	966913-1	Panel, 15.13 x 50.25
2.	966913-2	Panel, 18.5 x 15.13
3.	966913-3	Panel, 18.5 x 15.13
4.	966913-4	Panel, 3 x 24.38
5.	966913-5	Panel, 3 x 24.38
6.	966913-6	Panel, 3 x 24.38
7.	966913-7	Panel, 3 x 24.38
8.	966913-8	Panel, 30 x 15.13
9.	966913-9	Panel, 3 x 4.94
10.	966913-10	Panel, 3 x 4.94
11.	966913-11	Panel, 3 x 15.13
12.	966913-1512	Panel, 5.56 x 14.25
13.	966913-1513	Door, 25 x 14.25
14.	966913-1514	Door, 25 x 14.25
15.	966913-1515	Panel, 10.5 x 15.13
16.	966913-25	Panel, 7.94 x 11.94
	381607-11	Hinge, Self-close
	382115	Pull, Flat Black
	381228-02	Catch, Grabber door
	801706-0018	Corner trim, 90°, 1" radius, Asian Sand
	112671-04	Vinyl, Under Bed Storage

2018 INTERNATIONAL
FURNITURE, BEDROOM

Bed, Twin, Roadside, 25’, Signature

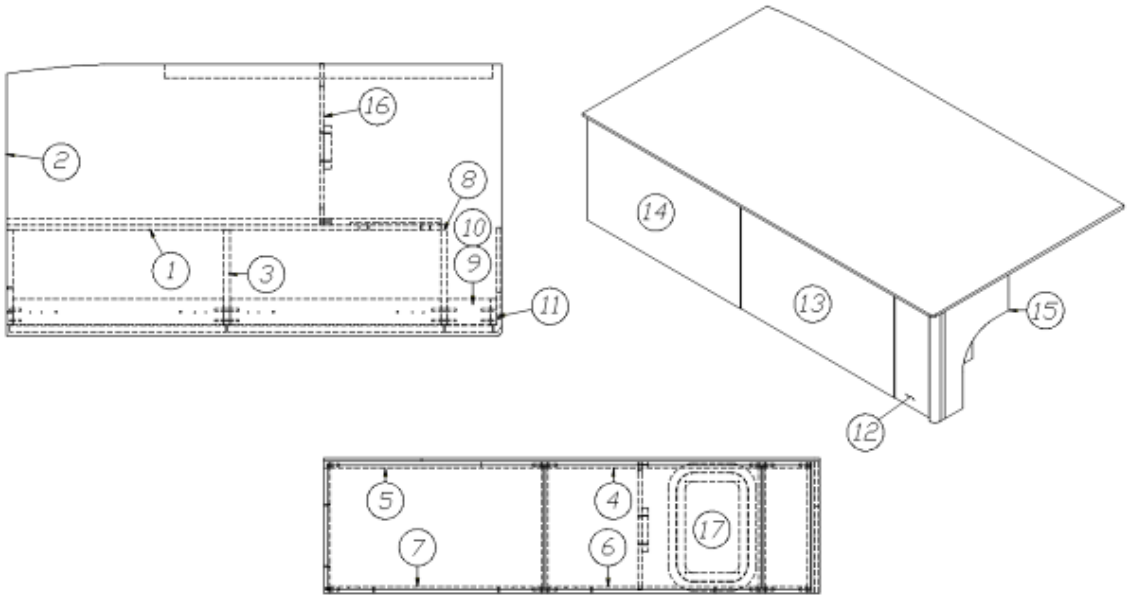

	967770	RS Twin Bed
1.	967770-1	Panel, 15.13 x 50.25
2.	967770-2	Panel, 11 x 15.13
3.	967770-3	Panel, 11 x 15.13
4.	967770-4	Panel, 3 x 24.38
5.	967770-5	Panel, 3 x 24.38
6.	967770-6	Panel, 3 x 24.38
7.	967770-7	Panel, 3 x 24.38
8.	967770-8	Panel, 11.5 x 15.13
9.	967770-9	Panel, 3 x 4.94
10.	967770-10	Panel, 3 x 4.94
11.	967770-11	Panel, 3 x 15.13
12.	967770-12	Panel, 5.56 x 14.25
13.	967770-13	Door, 25 x 14.25
14.	967770-14	Door, 25 x 14.25
15.	967770-15I	Panel, 10.5 x 15.13
16.	967770-26	Panel, 18.6 x 14.75
17.	967770-31	Panel, 12.5 x 8.125
	381607-11	Hinge, Self-close
	382029-04	Handle bar, 15”
	381228-02	Catch, Grabber door
	801706-0024	Corner trim, 90°, 1” radius, Ebony Woods
	365364-02	Edgebanding, .94”, Ebony Woods
	381463-03	Cover access hatch, White
	112671-01	Vinyl, Under Bed Storage

2018 INTERNATIONAL
FURNITURE, BEDROOM

Bed, Twin, Roadside, 25’, Serenity

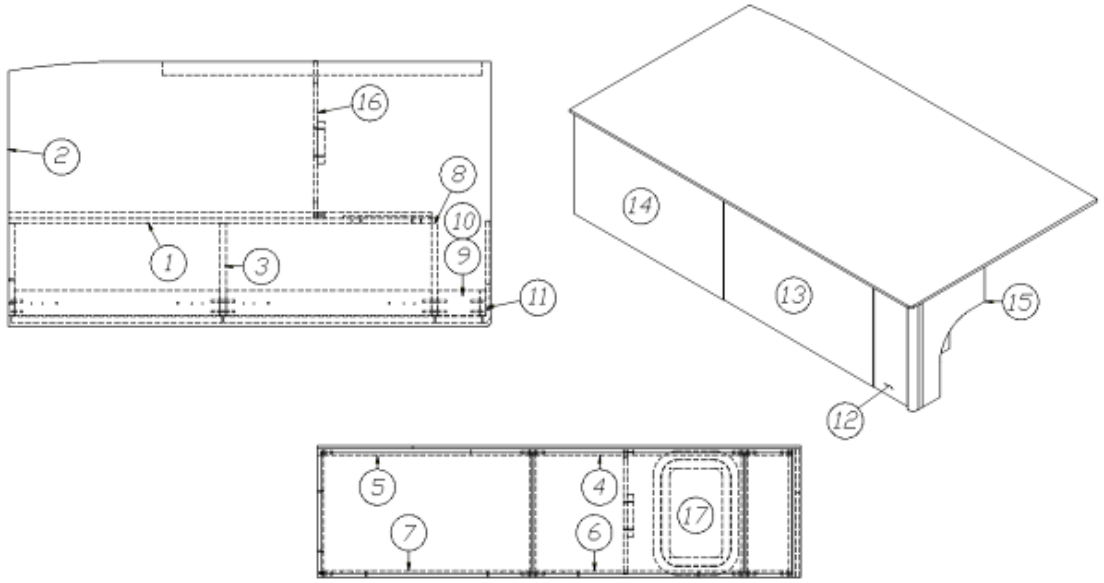

	967770-15	RS Twin Bed
1.	967770-1	Panel, 15.13 x 50.25
2.	967770-2	Panel, 11 x 15.13
3.	967770-3	Panel, 11 x 15.13
4.	967770-4	Panel, 3 x 24.38
5.	967770-5	Panel, 3 x 24.38
6.	967770-6	Panel, 3 x 24.38
7.	967770-7	Panel, 3 x 24.38
8.	967770-8	Panel, 11.5 x 15.13
9.	967770-9	Panel, 3 x 4.94
10.	967770-10	Panel, 3 x 4.94
11.	967770-11	Panel, 3 x 15.13
12.	967770-1512	Panel, 5.56 x 14.25
13.	967770-1513	Door, 25 x 14.25
14.	967770-1514	Door, 25 x 14.25
15.	967770-1515	Panel, 10.5 x 15.13
16.	967770-26	Panel, 18.6 x 14.75
17.	967770-31	Panel, 12.5 x 8.125
	381607-11	Hinge, Self-close
	382115	Pull, Flat Black
	381228-02	Catch, Grabber door
	801706-0018	Corner trim, 90°, 1” radius, Asian Sand
	365344-02	Edgebanding, .94”, Pearl Bisque
	381463-03	Cover access hatch, White
	112671-01	Vinyl, Under Bed Storage

2018 INTERNATIONAL
FURNITURE, BEDROOM

Bed, Twin, Curbside, 25FB, Signature

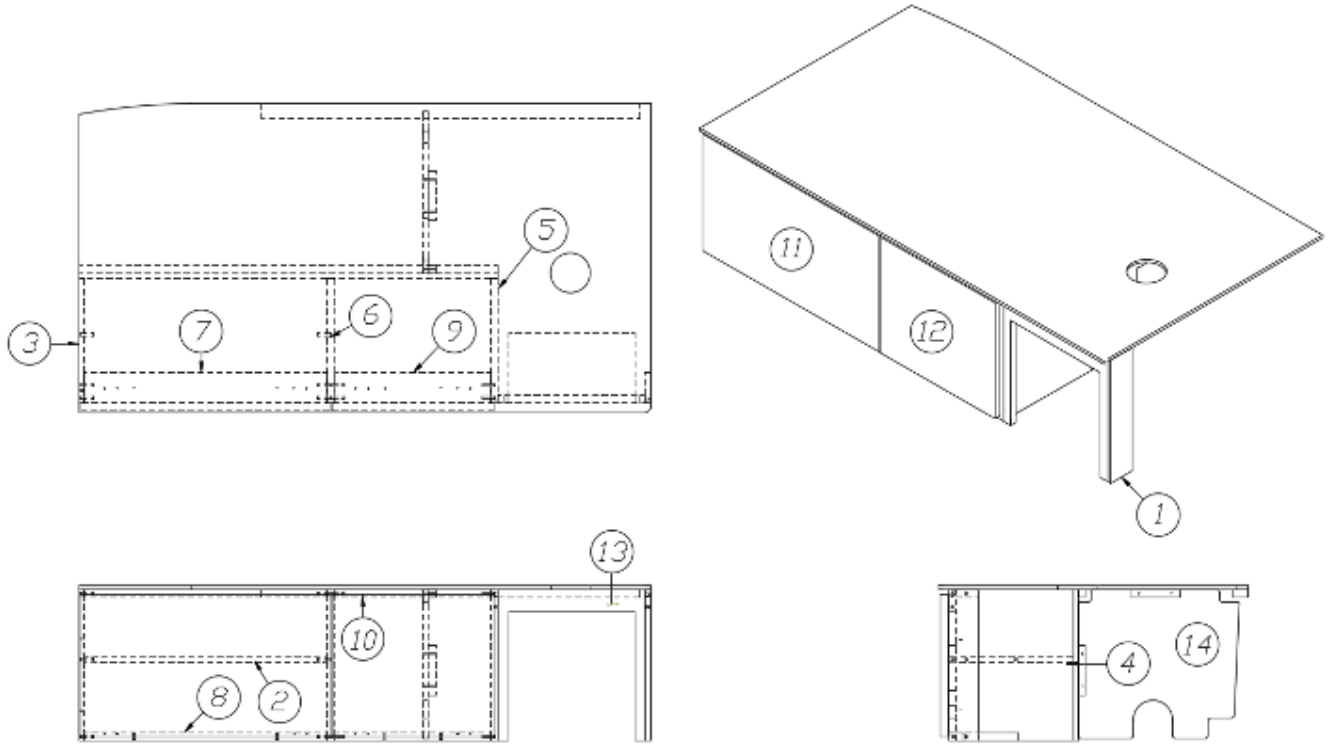

	966912	CS Twin Bed
1.	966912-1	Panel, 3 x 15.13
2.	966912-2	Panel, 12.5 x 24.38
3.	966912-3	Panel, 12.5 x 15.13
4.	966912-4	Panel, 42 x 15.13
5.	966912-5	Panel, 12.5 x 15.13
6.	966912-6	Panel, 12.5 x 15.13
7.	966912-7	Panel, 3 x 24.38
8.	966912-8	Panel, 3 x 24.38
9.	966912-9	Panel, 3 x 15.63
10.	966912-10	Panel, 3 x 15.63
11.	966912-11	Door, 25 x 14.25
12.	966912-12	Door, 16.25 x 14.25
13.	966912-13	Panel, 14.75 x 15.13
14.	966912-25	Panel, 16.174 x 14.875
	381607-11	Hinge, Self-close
	382029-05	Handle Bar, 21.33”
	201051	Drawer, 10 x 22
	381228-02	Catch, Grabber door
	112671-06	Vinyl, Under Bed Storage

2018 INTERNATIONAL
FURNITURE, BEDROOM

Bed, Twin, Curbside, 25FB, Serenity

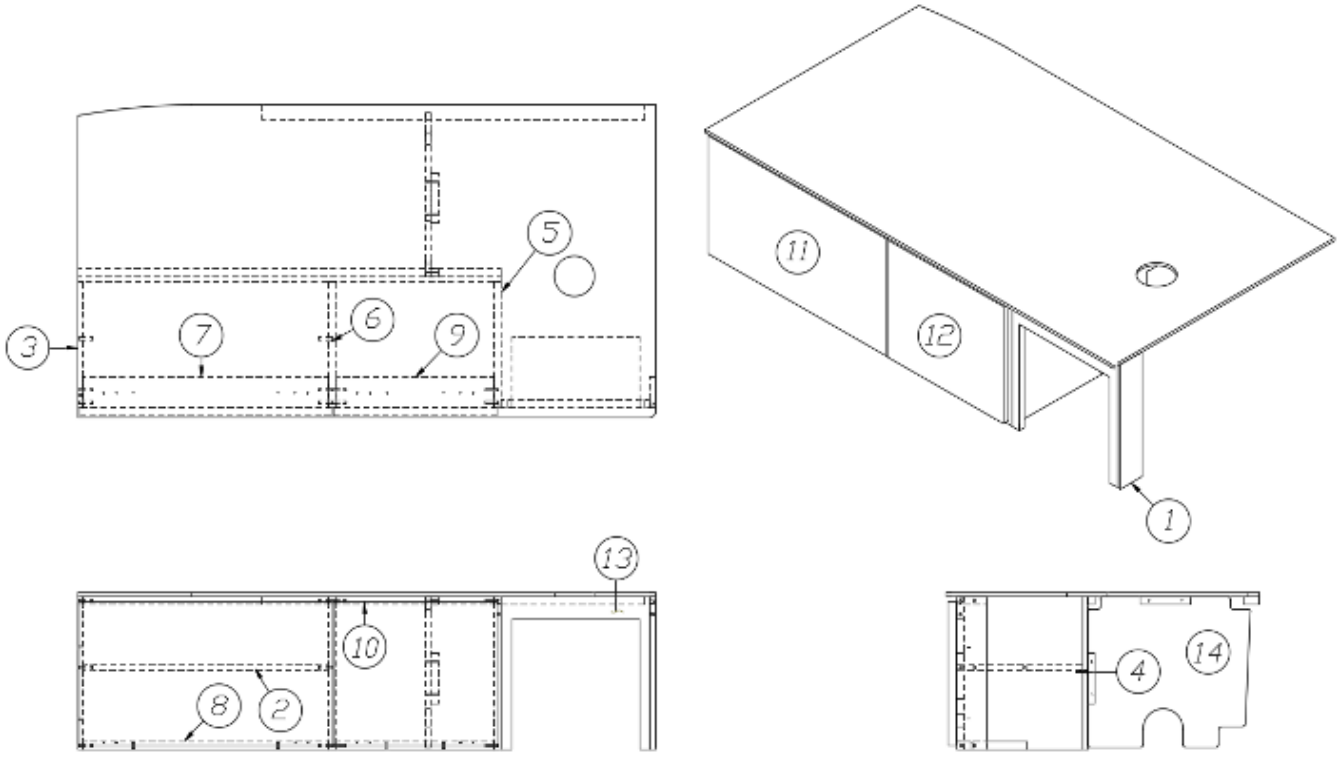

	966912-15	CS Twin Bed
1.	966912-1	Panel, 3 x 15.13
2.	966912-2	Panel, 12.5 x 24.38
3.	966912-3	Panel, 12.5 x 15.13
4.	966912-4	Panel, 42 x 15.13
5.	966912-5	Panel, 12.5 x 15.13
6.	966912-6	Panel, 12.5 x 15.13
7.	966912-7	Panel, 3 x 24.38
8.	966912-8	Panel, 3 x 24.38
9.	966912-9	Panel, 3 x 15.63
10.	966912-10	Panel, 3 x 15.63
11.	966912-1511	Door, 25 x 14.25
12.	966912-1512	Door, 16.25 x 14.25
13.	966912-1513	Panel, 14.75 x 15.13
14.	966912-25	Panel, 16.174 x 14.875
	381607-11	Hinge, Self-close
	382115	Pull, Flat Black
	201051	Drawer, 10 x 22
	381228-02	Catch, Grabber door
	112671-06	Vinyl, Under Bed Storage

2018 INTERNATIONAL
FURNITURE, BEDROOM

Bed, Twin, RS 27FB, CS 30’, Signature

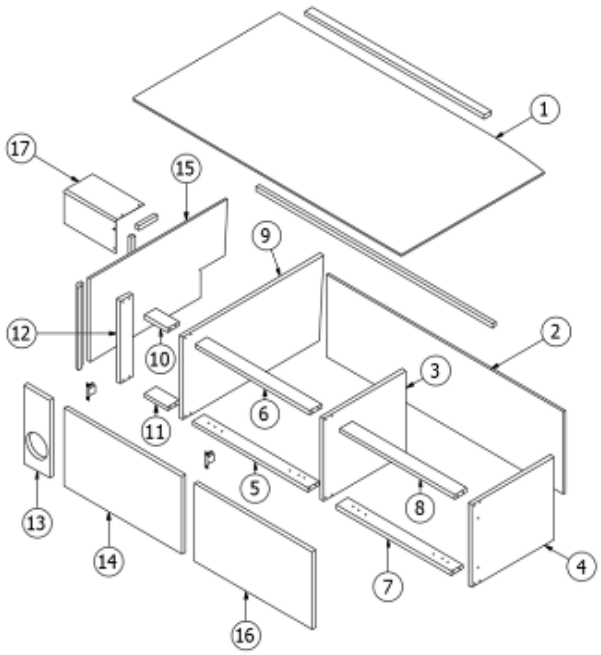

	966857	Twin Bed
1.	966857-1	Top, 31 x 57.25
2.	966857-2	Panel, 50.25 x 15.13
3.	966857-3	Panel, 17.5 x 15.13
4.	966857-4	Panel, 17.5 x 15.13
5.	966857-5	Panel, 2.5 x 24.38
6.	966857-6	Panel, 2.5 x 24.38
7.	966857-7	Panel, 2.5 x 24.38
8.	966857-8	Panel, 2.5 x 24.38
9.	966857-9	Panel, 30 x 15.13
10.	966857-10	Panel, 2.5 x 4.94
11.	966857-11	Panel, 2.5 x 4.94
12.	966857-12	Panel, 2.5 x 15.13
13.	966857-13	Panel, 5.56 x 14.25
14.	966857-17	Door, 25 x 14.25
15.	966857-22	Panel, 29.5 x 15.13
16.	966857-26	Door, 25 x 14.25
17.	115905	Closeout, Bed base
	382029-05	Handle bar, 21.33”
	381607-11	Hinge, Self-close
	381228-02	Catch, Grabber door
	801706-0024	Corner trim, 90°, 1" radius, Ebony Woods
	112671-13	Vinyl, Under Bed Storage

2018 INTERNATIONAL
FURNITURE, BEDROOM

Bed, Twin, RS 27FB, CS 30’, Serenity

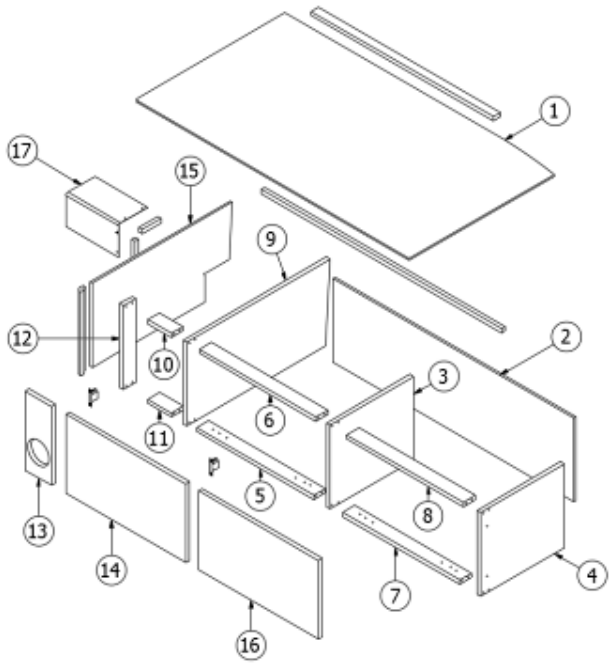

	966857-15	Twin Bed
1.	966857-1	Top, 31 x 57.25
2.	966857-2	Panel, 50.25 x 15.13
3.	966857-3	Panel, 17.5 x 15.13
4.	966857-4	Panel, 17.5 x 15.13
5.	966857-5	Panel, 2.5 x 24.38
6.	966857-6	Panel, 2.5 x 24.38
7.	966857-7	Panel, 2.5 x 24.38
8.	966857-8	Panel, 2.5 x 24.38
9.	966857-9	Panel, 30 x 15.13
10.	966857-10	Panel, 2.5 x 4.94
11.	966857-11	Panel, 2.5 x 4.94
12.	966857-12	Panel, 2.5 x 15.13
13.	966857-1513	Panel, 5.56 x 14.25
14.	966857-1517	Door, 25 x 14.25
15.	966857-1522	Panel, 29.5 x 15.13
16.	966857-1526	Door, 25 x 14.25
17.	115905	Closeout, Bed base
	382115	Pull, Flat Black
	381607-11	Hinge, Self-close
	381228-02	Catch, Grabber door
	801706-0018	Corner trim, 90°, 1" radius, Asian Sand
	112671-13	Vinyl, Under Bed Storage

2018 INTERNATIONAL
FURNITURE, BEDROOM

Bed, Twin, CS 27FB, RS 30’, Signature

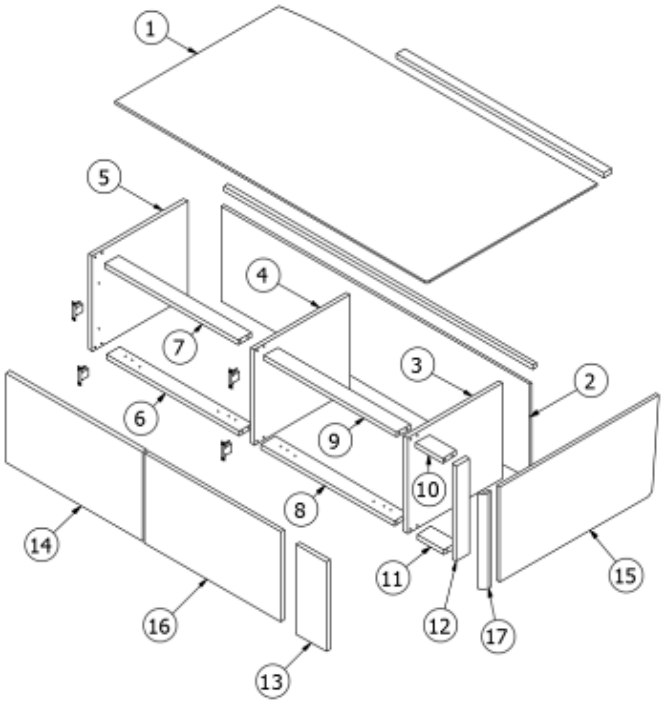

	966856	Twin Bed
1.	966856-1	Top, 31 x 57.25
2.	966856-2	Panel, 56.69 x 15.13
3.	966856-3	Panel, 17.5 x 15.13
4.	966856-4	Panel, 17.5 x 15.13
5.	966856-5	Panel, 17.5 x 15.13
6.	966856-6	Panel, 2.5 x 24.38
7.	966856-7	Panel, 2.5 x 24.38
8.	966856-8	Panel, 2.5 x 24.38
9.	966856-9	Panel, 2.5 x 24.38
10.	966856-10	Panel, 2.5 x 4.94
11.	966856-11	Panel, 2.5 x 4.94
12.	966856-12	Panel, 2.5 x 15.13
13.	966856-13	Panel, 5.56 x 14.25
14.	966856-17	Door, 25 x 14.25
15.	966856-22	Panel, 29.13 x 15.13
16.	966856-25	Door, 25 x 14.25
17.	801706-0024	Corner trim, 90°, 1" radius, Ebony Woods
	381607-11	Hinge, Self-close
	382029-05	Handle bar, 21.33”
	381228-02	Catch, Grabber door
	112671-12	Vinyl, Under Bed Storage

2018 INTERNATIONAL
FURNITURE, BEDROOM

Bed, Twin, CS 27FB, RS 30', Serenity

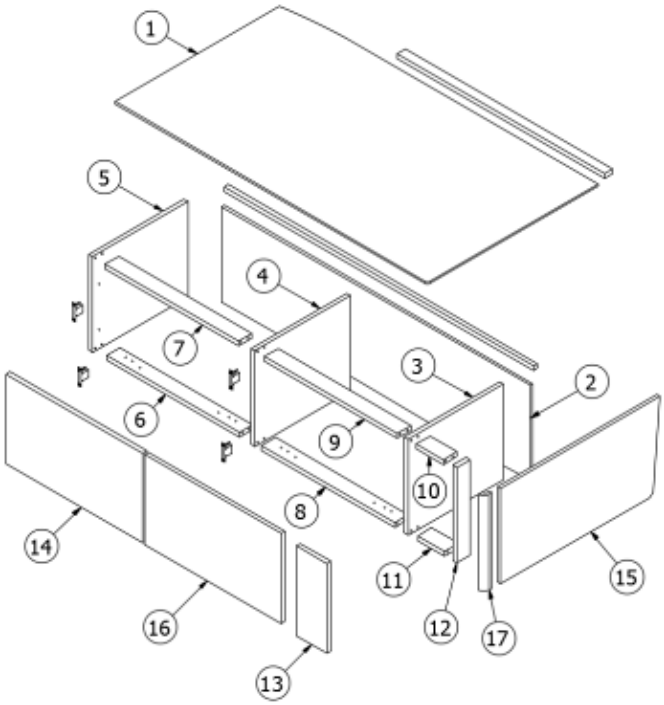

	966856-15	Twin Bed
1.	966856-1	Top, 31 x 57.25
2.	966856-2	Panel, 56.69 x 15.13
3.	966856-3	Panel, 17.5 x 15.13
4.	966856-4	Panel, 17.5 x 15.13
5.	966856-5	Panel, 17.5 x 15.13
6.	966856-6	Panel, 2.5 x 24.38
7.	966856-7	Panel, 2.5 x 24.38
8.	966856-8	Panel, 2.5 x 24.38
9.	966856-9	Panel, 2.5 x 24.38
10.	966856-10	Panel, 2.5 x 4.94
11.	966856-11	Panel, 2.5 x 4.94
12.	966856-12	Panel, 2.5 x 15.13
13.	966856-1513	Panel, 5.56 x 14.25
14.	966856-1517	Door, 25 x 14.25
15.	966856-1522	Panel, 29.13 x 15.13
16.	966856-1525	Door, 25 x 14.25
17.	801706-0018	Corner trim, 90°, 1" radius, Asian Sand
	381607-11	Hinge, Self-close
	382115	Pull, Flat Black
	381228-02	Catch, Grabber door
	112671-12	Vinyl, Under Bed Storage

2018 INTERNATIONAL
FURNITURE, BEDROOM

Bed, Twin, Roadside, 28’, Signature

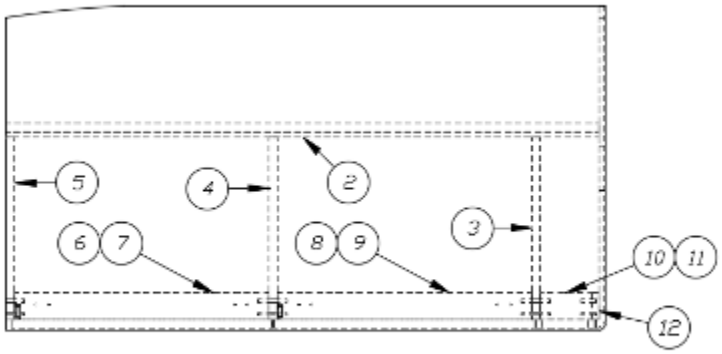

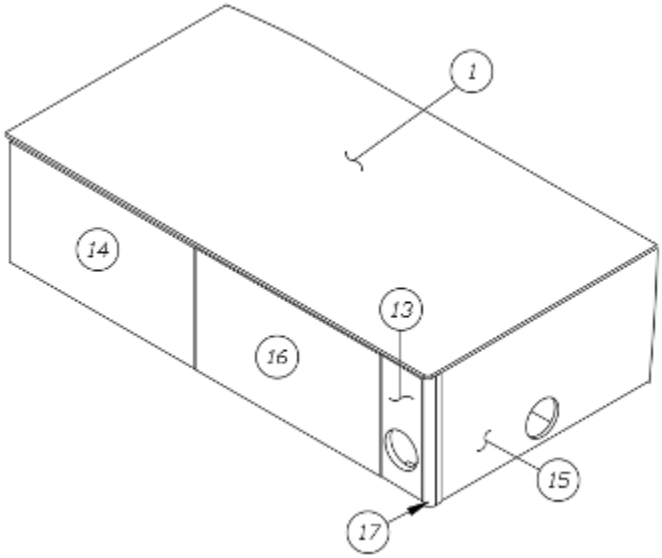

	967856-01	RS Twin Bed
1.	967856-1	Panel, 31 x 57.25
2.	967856-2	Panel, 15.13 x 56.69
3.	967856-3	Panel, 17.5 x 15.13
4.	967856-4	Panel, 17.5 x 15.13
5.	967856-5	Panel, 17.5 x 15.13
6.	967856-6	Panel, 2.5 x 24.38
7.	967856-7	Panel, 2.5 x 24.38
8.	967856-8	Panel, 2.5 x 24.38
9.	967856-9	Panel, 2.5 x 24.38
10.	967856-10	Panel, 2.5 x 4.94
11.	967856-11	Panel, 2.5 x 4.94
12.	967856-12	Panel, 2.5 x 15.13
13.	967856-0113	Panel, 5.56 x 14.25
14.	967856-0117	Door, 25 x 14.25
15.	967856-0122	Panel, 29.3 x 15.13
16.	967856-0125	Door, 25 x 14.25
17.	801706-0024	Corner trim, 90°, 1” radius, Ebony Woods
	382029-04	Handle bar, 15”
	381607-11	Hinge, Self-close
	381228-02	Catch, Grabber door, 5LB
	365364-02	Edgebanding .94”, Ebony Woods

2018 INTERNATIONAL
FURNITURE, BEDROOM

Bed, Twin, Roadside, 28’, Serenity

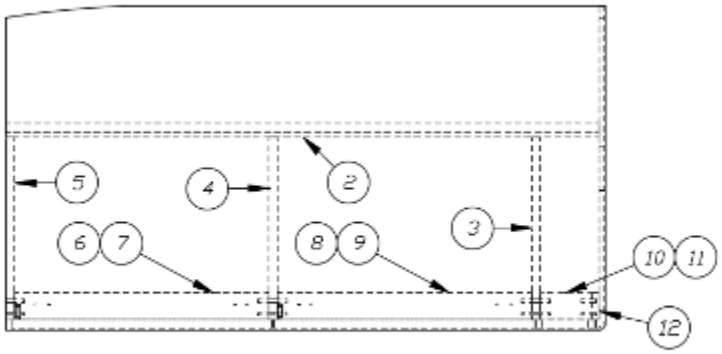

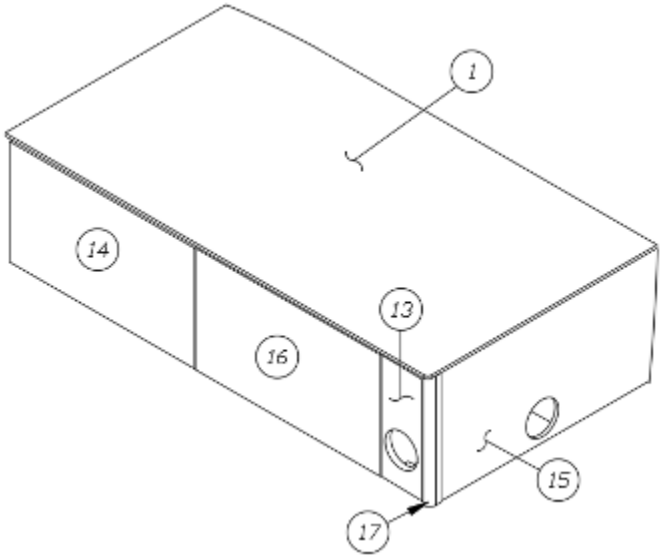

	967856-15	RS Twin Bed
1.	967856-1	Panel, 31 x 57.25
2.	967856-2	Panel, 15.13 x 56.69
3.	967856-3	Panel, 17.5 x 15.13
4.	967856-4	Panel, 17.5 x 15.13
5.	967856-5	Panel, 17.5 x 15.13
6.	967856-6	Panel, 2.5 x 24.38
7.	967856-7	Panel, 2.5 x 24.38
8.	967856-8	Panel, 2.5 x 24.38
9.	967856-9	Panel, 2.5 x 24.38
10.	967856-10	Panel, 2.5 x 4.94
11.	967856-11	Panel, 2.5 x 4.94
12.	967856-12	Panel, 2.5 x 15.13
13.	967856-1513	Panel, 5.56 x 14.25
14.	967856-1517	Door, 25 x 14.25
15.	967856-1522	Panel, 29.3 x 15.13
16.	967856-1525	Door, 25 x 14.25
17.	801706-0018	Corner trim, 90°, 1” radius, Asian Sand
	382115	Pull, Flat Black
	381607-11	Hinge, Self-close
	381228-02	Catch, Grabber door, 5LB
	365344-02	Edgebanding .94”, Pearl Bisque

2018 INTERNATIONAL
FURNITURE, BEDROOM

Bed, Twin, Curbside, 28’, Signature

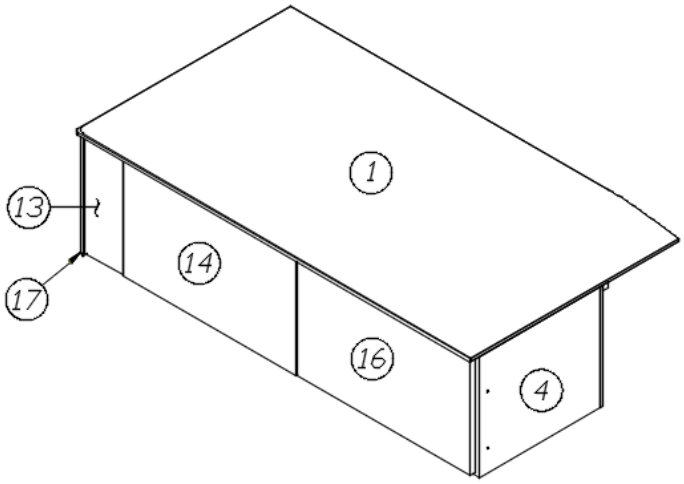

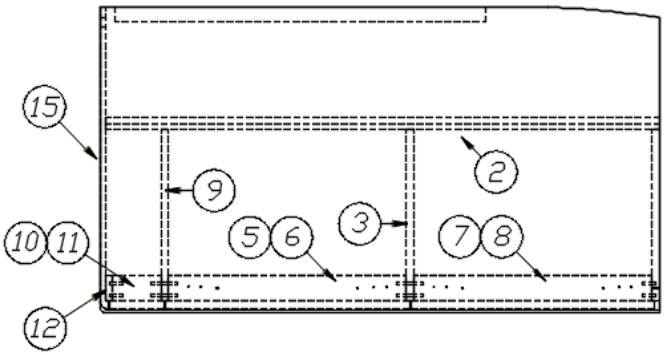

	967925-01	CS Twin Bed
1.	967925-1	Panel, 31 x 57.25
2.	967925-2	Panel, 15.13 x 56.69
3.	967925-3	Panel, 17.5 x 15.13
4.	967925-4	Panel, 17.5 x 15.13
5.	967925-5	Panel, 2.5 x 24.38
6.	967925-6	Panel, 2.5 x 24.38
7.	967925-7	Panel, 2.5 x 24.38
8.	967925-8	Panel, 2.5 x 24.38
9.	967925-9	Panel, 17.5 x 15.13
10.	967925-10	Panel, 2.5 x 4.94
11.	967925-11	Panel, 2.5 x 4.94
12.	967925-12	Panel, 2.5 x 15.13
13.	967925-0113	Panel, 5.56 x 14.25
14.	967925-0117	Door, 25 x 14.25
15.	967925-0122	Panel, 29.5 x 15.13
16.	967925-0126	Door, 25 x 14.25
17.	801706-0024	Corner trim, 90°, 1” radius, Ebony Woods
	114879-201	Aluminum sheet, 33” x 198”
	382029-04	Handle bar, 15”
	381607-11	Hinge, Self-close
	381228-02	Catch, Grabber door, 5LB
	365364-02	Edgebanding .94”, Ebony Woods
	112671-07	Vinyl, Under Bed Storage

2018 INTERNATIONAL
FURNITURE, BEDROOM

Bed, Twin, Curbside, 28’, Serenity

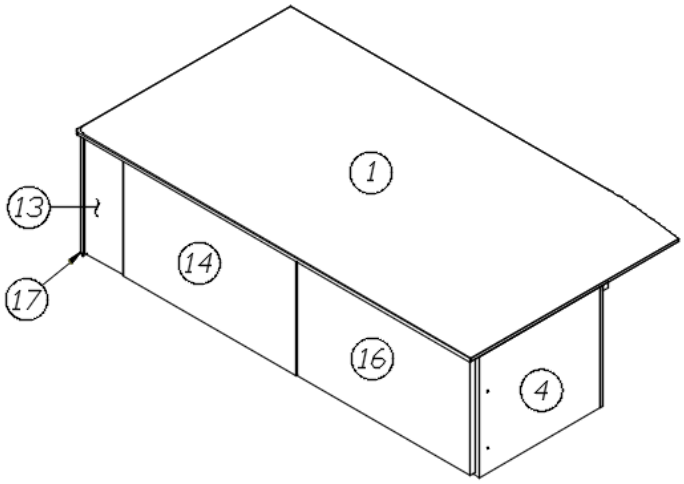

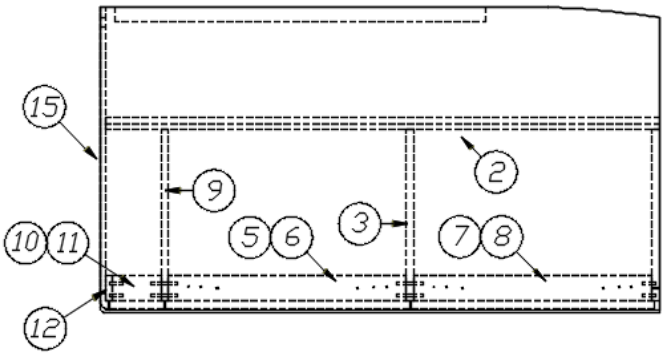

	967925-15	CS Twin Bed
1.	967925-1	Panel, 31 x 57.25
2.	967925-2	Panel, 15.13 x 56.69
3.	967925-3	Panel, 17.5 x 15.13
4.	967925-4	Panel, 17.5 x 15.13
5.	967925-5	Panel, 2.5 x 24.38
6.	967925-6	Panel, 2.5 x 24.38
7.	967925-7	Panel, 2.5 x 24.38
8.	967925-8	Panel, 2.5 x 24.38
9.	967925-9	Panel, 17.5 x 15.13
10.	967925-10	Panel, 2.5 x 4.94
11.	967925-11	Panel, 2.5 x 4.94
12.	967925-12	Panel, 2.5 x 15.13
13.	967925-1513	Panel, 5.56 x 14.25
14.	967925-1517	Door, 25 x 14.25
15.	967925-1522	Panel, 29.5 x 15.13
16.	967925-1526	Door, 25 x 14.25
17.	801706-0018	Corner trim, 90°, 1” radius, Asian Sand
	114879-201	Aluminum sheet, 33” x 198”
	382115	Pull, Flat Black
	381607-11	Hinge, Self-close
	381228-02	Catch, Grabber door, 5LB
	365344-02	Edgebanding .94”, Pearl Bisque
	112671-07	Vinyl, Under Bed Storage

2018 INTERNATIONAL
FURNITURE, BEDROOM

Nightstand, 23FB, 25', 25FB Signature

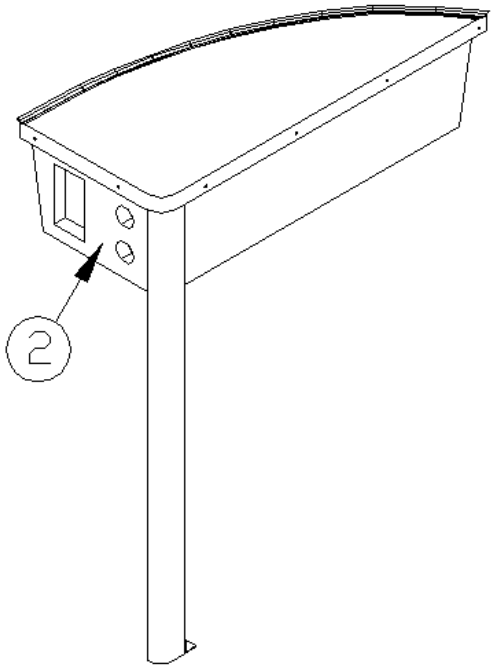

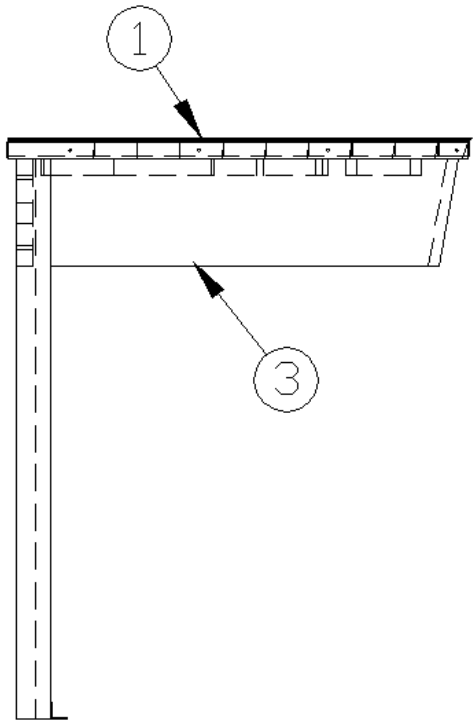

	966899	Nightstand
1.	966899-1	Top, 9.25 x 21.39
2.	966899-2	Panel, 7.63 x 5
3.	966899-3	Panel, 18.95 x 5
	801706-0024	Corner trim, 90°, 1" radius, Ebony Woods
	380041	Brace, 1", Stanley corner

2018 INTERNATIONAL
FURNITURE, BEDROOM

Nightstand, 23FB, 25’, 25FB Serenity

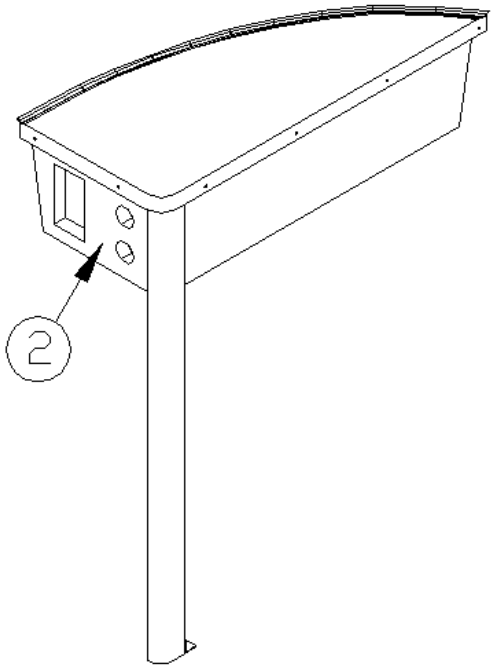

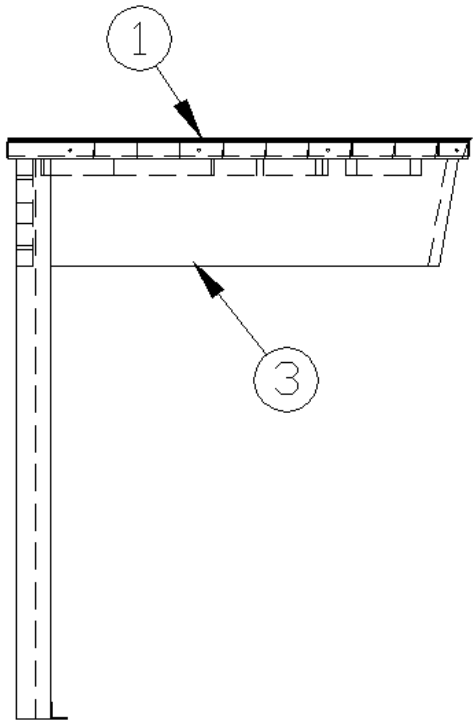

	966899-15	Nightstand
1.	966899-151	Top, 9.25 x 21.39
2.	966899-152	Panel, 7.63 x 5”
3.	966899-153	Panel, 18.95 x 5
	801706-0018	Corner trim, 90°, 1" radius, Asian Sand
	380041	Brace, 1", Stanley corner

2018 INTERNATIONAL
FURNITURE, BEDROOM

Nightstand, LH, 27FB Signature

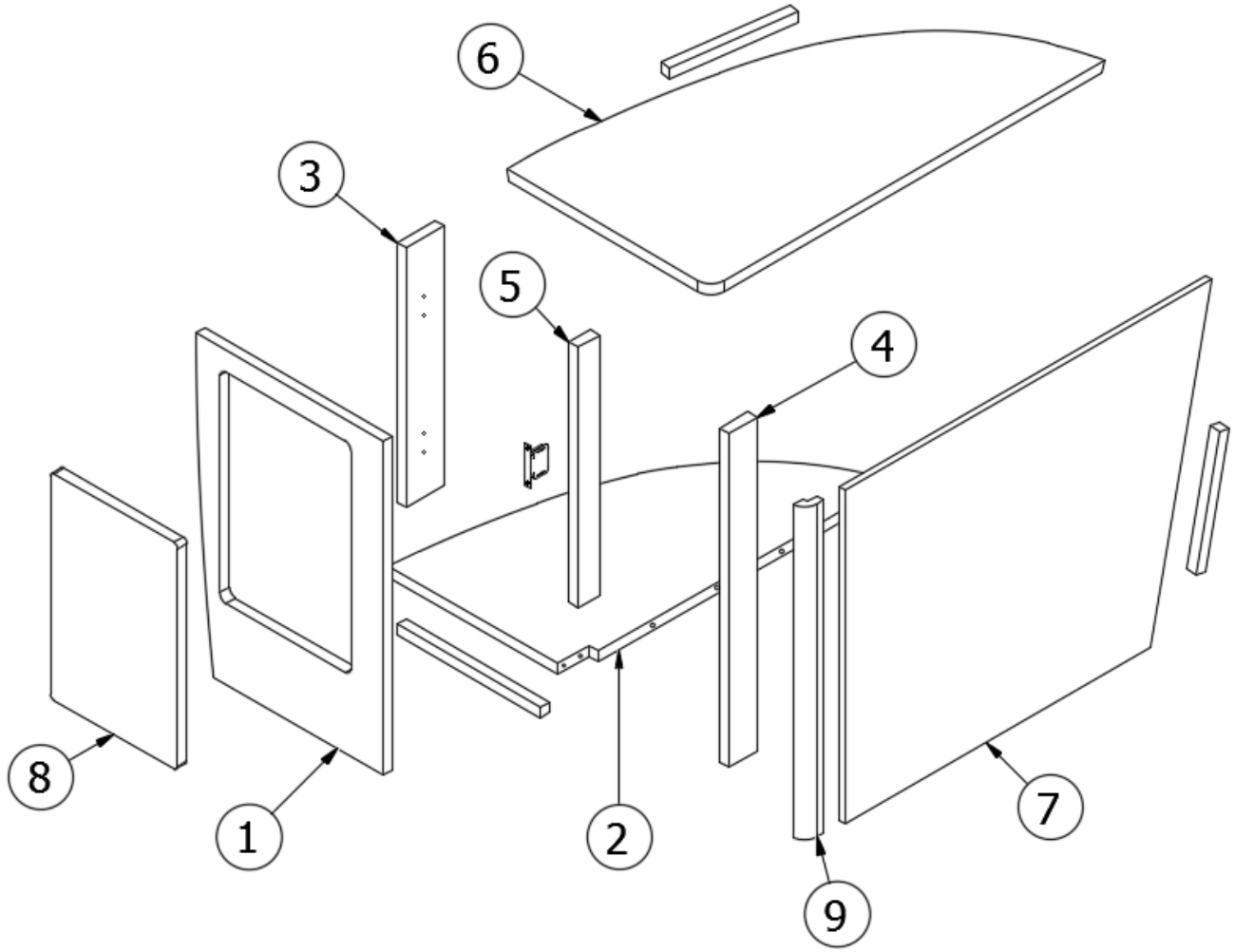

	966868	LH Nightstand
1.	966868-1	Panel, 14.78 x 22.75
2.	966868-2	Panel, 27.69 x 14.13
3.	966868-3	Panel, 3 x 17.75
4.	966868-4	Panel, 2.25 x 22.75
5.	966868-5	Panel, 17.75 x 1.63
6.	966868-6	Panel, 16.09 x 31.06
7.	966868-7	Panel, 28.84 x 22.75
8.	966868-8	Door, 10 x 15.44
9.	801706-0024	Corner trim, 90°, 1 radius, Ebony
	382029-00	Handle bar, 7.48
	381607-11	Hinge, Self-close
	381228-02	Catch, Grabber door, (5lb Pull)
	201673	Reverse cove molding, White

2018 INTERNATIONAL
FURNITURE, BEDROOM

Nightstand, LH, 27FB Serenity

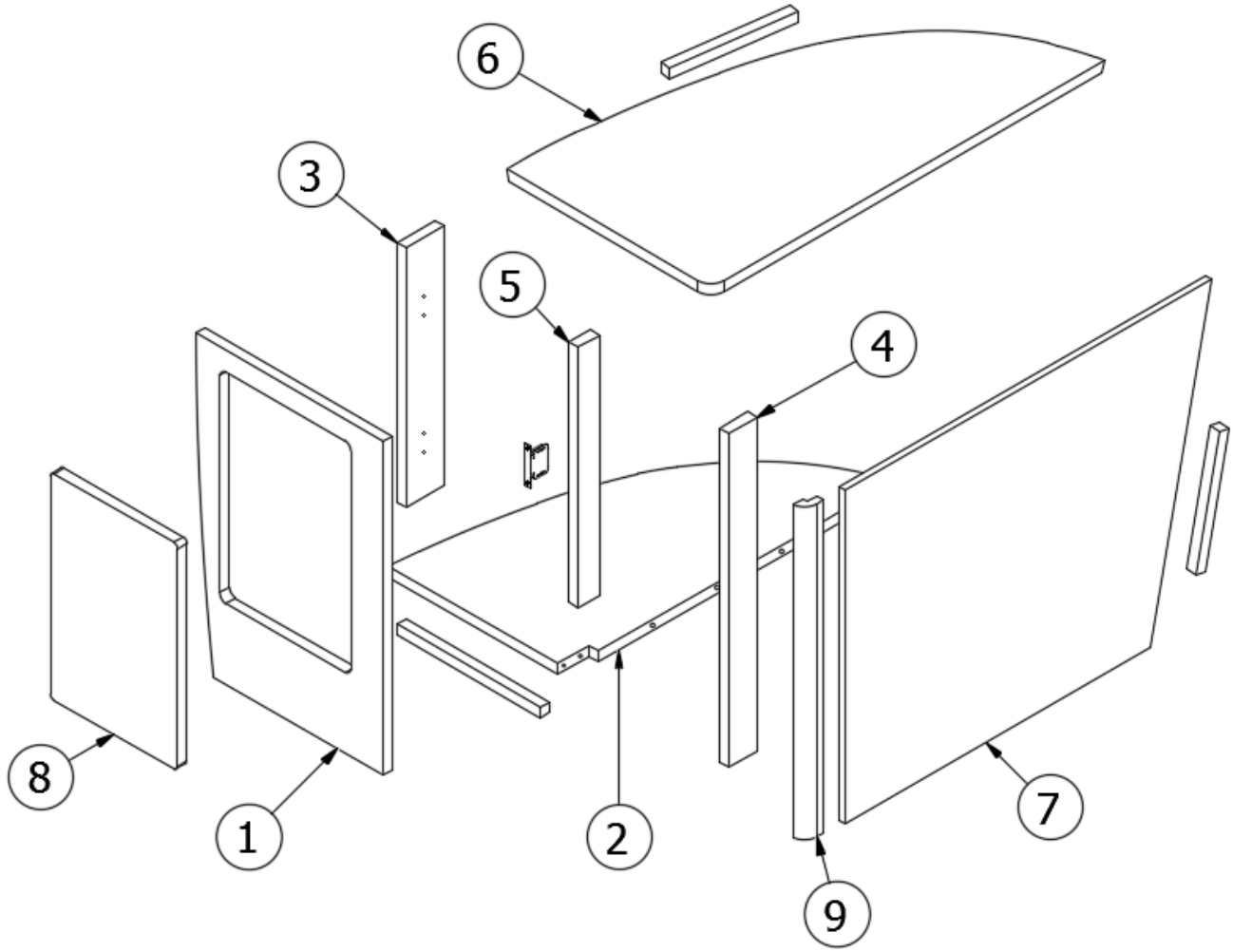

	966868-15	LH Nightstand
1.	966868-151	Panel, 14.78 x 22.75
2.	966868-2	Panel, 27.69 x 14.13
3.	966868-3	Panel, 3 x 17.75
4.	966868-4	Panel, 2.25 x 27.75
5.	966868-5	Panel, 17.75 x 1.63
6.	966868-156	Panel, 16.09 x 31.06
7.	966868-157	Panel, 28.84 x 22.75
8.	966868-158	Door, 10 x 15.44
9.	801706-0018	Corner trim, 90°, 1 radius, Asian Sand
	382115	Pull, Flat Black
	381607-11	Hinge, Self-close
	381228-02	Catch, Grabber door, (5lb Pull)
	201673	Reverse cove molding, White

2018 INTERNATIONAL
FURNITURE, BEDROOM

Nightstand, RH, 27FB Signature

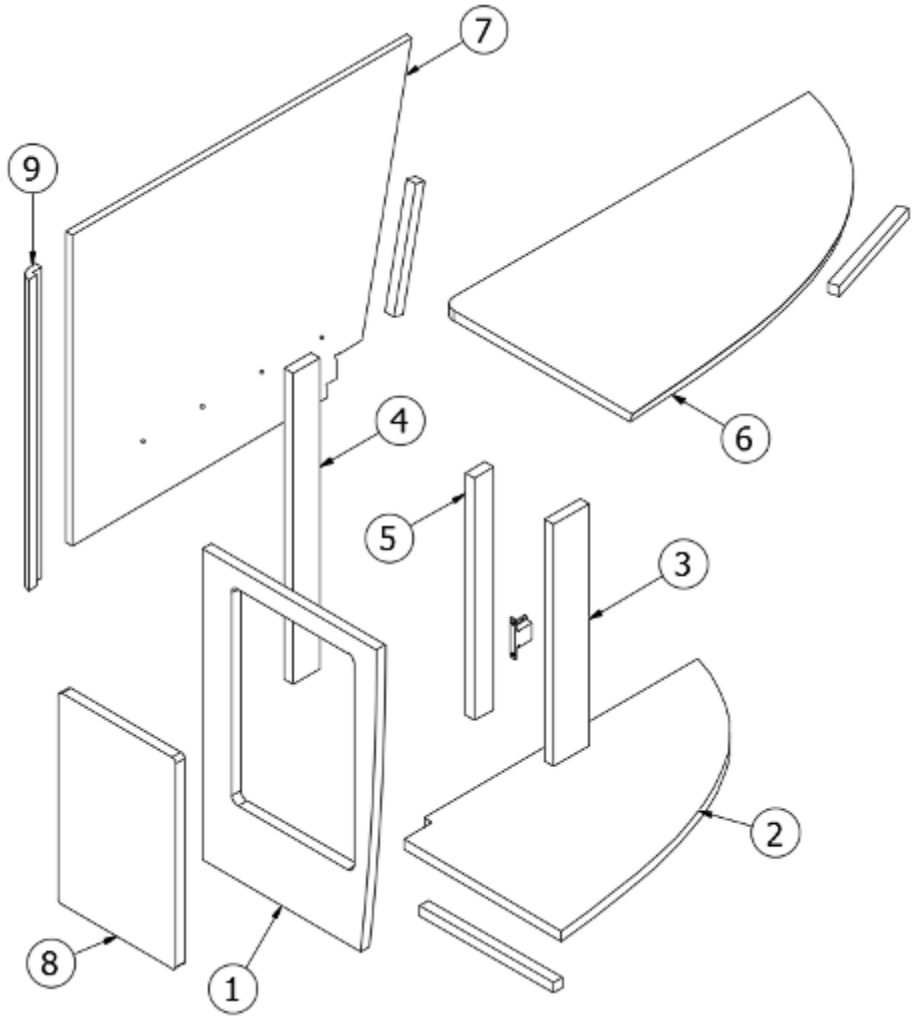

	966851	RH Nightstand
1.	966851-1	Panel, 14.78 x 22.75
2.	966851-2	Panel, 27.69 x 14.13
3.	966851-3	Panel, 3 x 17.75
4.	966851-4	Panel, 2.25 x 27.75
5.	966851-5	Panel, 17.75 x 1.63,
6.	966851-6	Panel, 16.09 x 31.06
7.	966851-7	Panel, 28.84 x 22.75
8.	966851-8	Door, 10 x 15.44
9.	801706-0024	Corner trim, 90°, 1" radius, Ebony
	382029-00	Handle bar, 7.48
	381607-11	Hinge, Self-close
	381228-02	Catch, Grabber door, (5lb Pull)
	201673	Reverse cove molding, White

2018 INTERNATIONAL
FURNITURE, BEDROOM

Nightstand, RH, 27FB Serenity

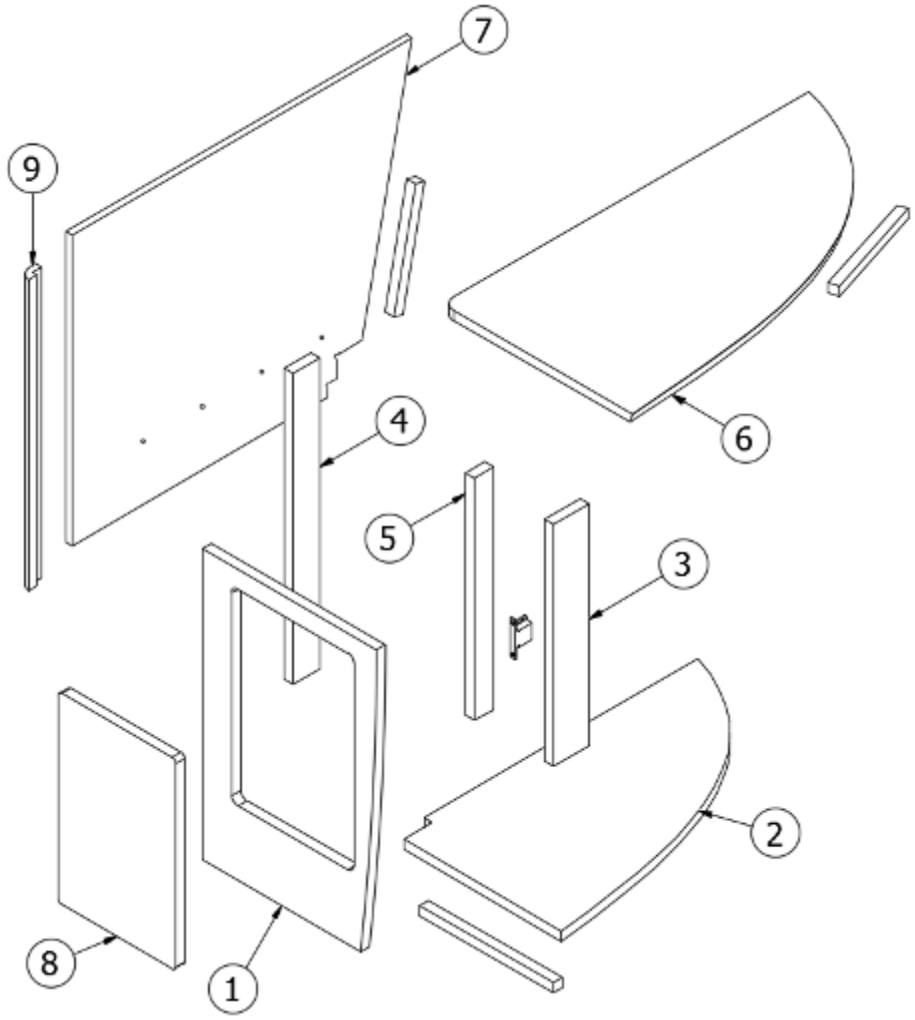

	966851-15	RH Nightstand
1.	966851-151	Panel, 14.78 x 2275
2.	966851-2	Panel, 27.69 x 22.75
3.	966851-3	Panel, 3 x 17.75
4.	966851-4	Panel, 2.25 x 22.75
5.	966851-5	Panel, 17.75 x 1.63
6.	966851-156	Panel, 16.09 x 31.09
7.	966851-157	Panel, 28.84 x 22.75
8.	966851-158	Door, 9.88 x 15.31
9.	801706-0018	Corner trim, 90°, 1" radius, Asian Sand
	382115	Pull, Flat Black
	381607-11	Hinge, Self-close
	381228-02	Catch, Grabber door, (5lb Pull)
	201673	Reverse cove molding, White

2018 INTERNATIONAL
FURNITURE, BEDROOM

Nightstand, Twin, 25’, 25FB, 27FB, 28’, 30’, Signature

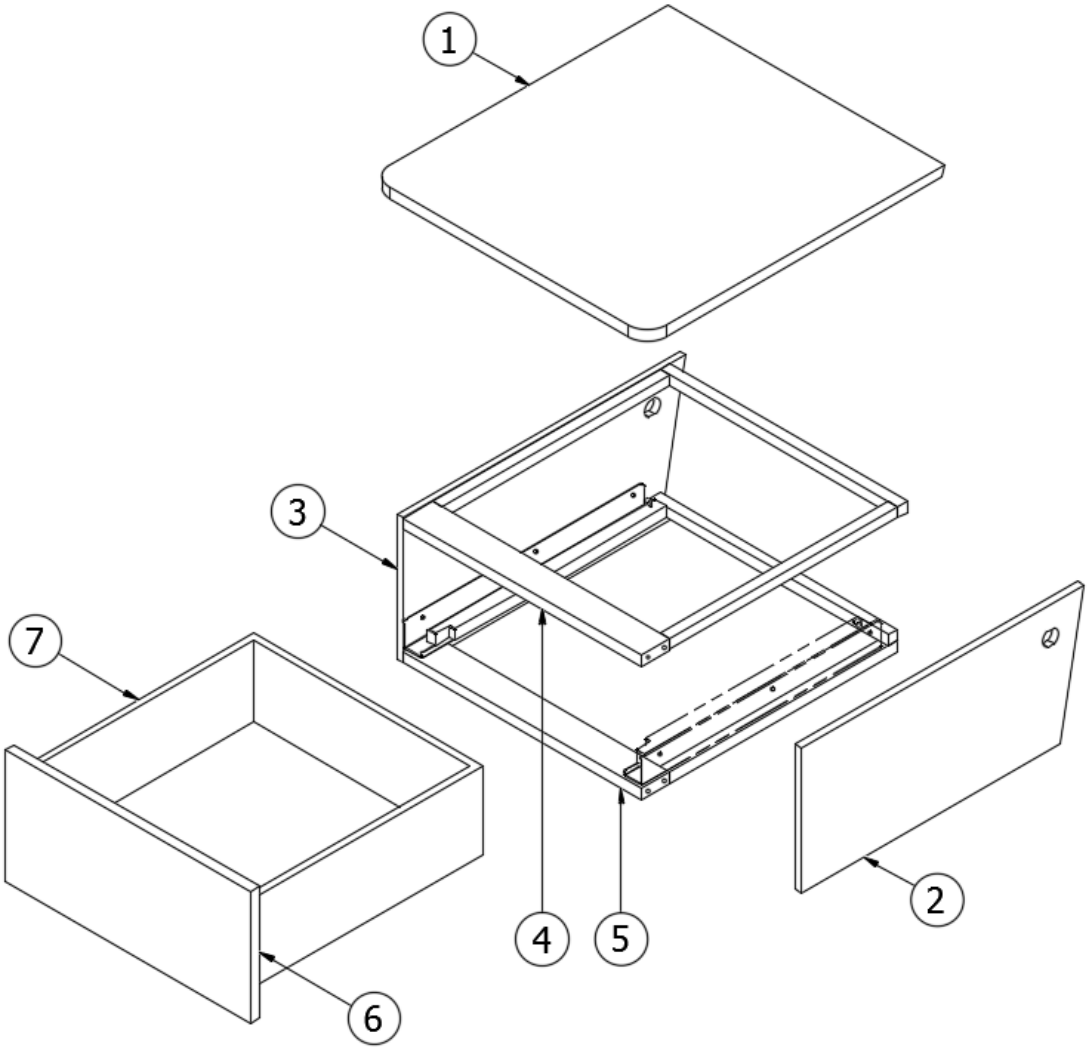

	968030	Center Nightstand
1.	966860	Top, Twin nightstand
2.	968030-2	Panel, 22 x 9.75
3.	968030-3	Panel, 22 x 9.75
4.	968030-094	Panel, 18.5 x 2.5
5.	968030-095	Panel, 18.5 x 2.5
6.	968030-7	Door, 19.13 x 8.88
7.	968022-03	Drawer box, 6" x 17.88" x 18”
	382029-04	Handle bar, 15”
	381228-02	Catch, Grabber door (5lb Pull)
	365364-01	Edgebanding, .63", Ebony Woods
	382203-04	Drawer slide, Self-close, 18”
	382203-06	Clips, Front fixing

2018 INTERNATIONAL
FURNITURE, BEDROOM

Nightstand, Twin, 25’, 25FB, 27FB, 28’, 30’, Serenity

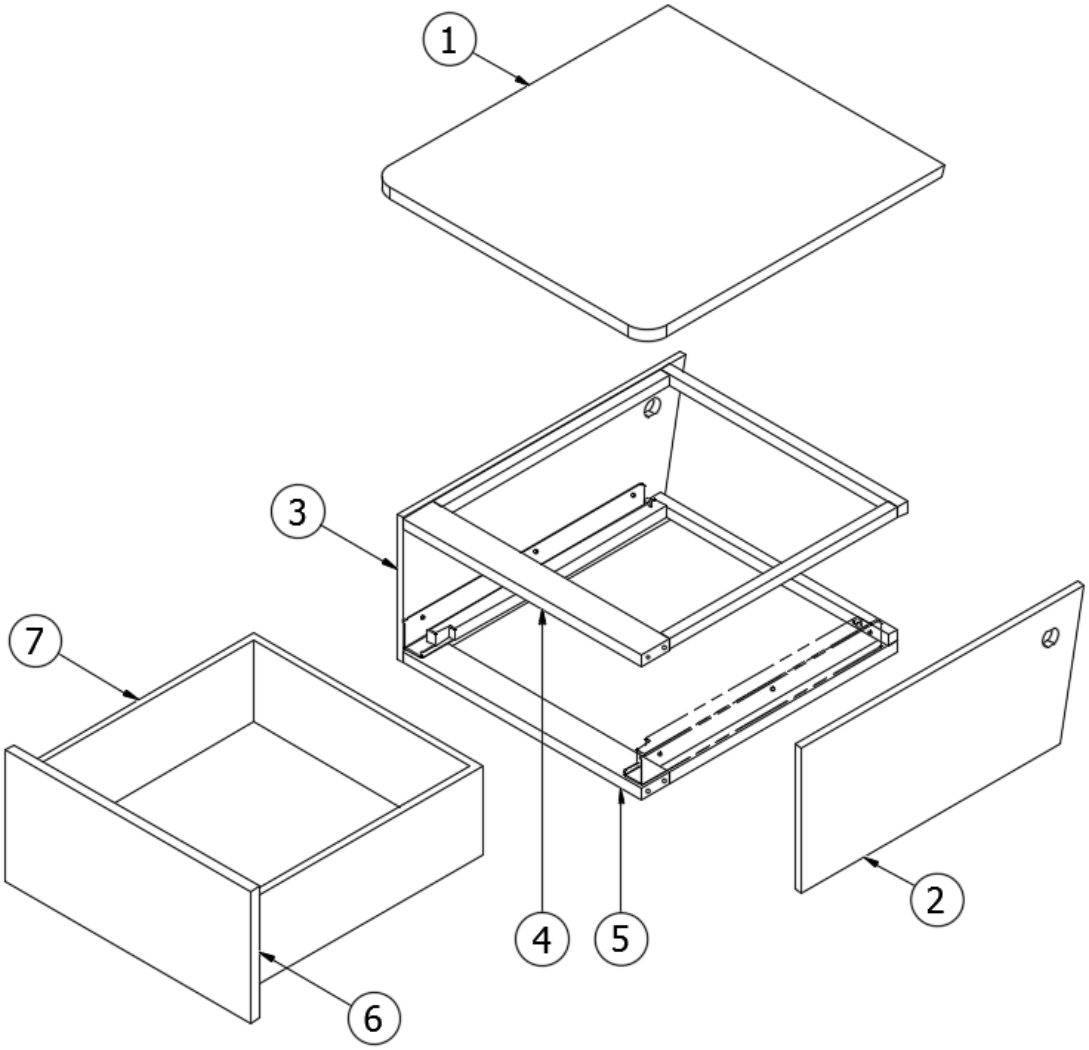

	968030-15	Center Nightstand
1.	966860-15	Top, Twin nightstand
2.	968030-152	Panel, 22 x 9.75
3.	968030-153	Panel, 22 x 9.75
4.	968030-094	Panel, 18.5 x 2.5
5.	968030-095	Panel, 18.5 x 2.5
6.	968030-157	Door, 19.13 x 8.88
7.	968022-03	Drawer box, 6" x 17.88" x 18”
	382115	Pull, Flat Black
	381228-02	Catch, Grabber door (5lb Pull)
	365344-01	Edgebanding, .63", Pearl Bisque
	382203-04	Drawer slide, Self-close, 18”
	382203-06	Clips, Front fixing

2018 INTERNATIONAL
FURNITURE, BEDROOM

Closet, Left Rear, 28’, 30’ Signature

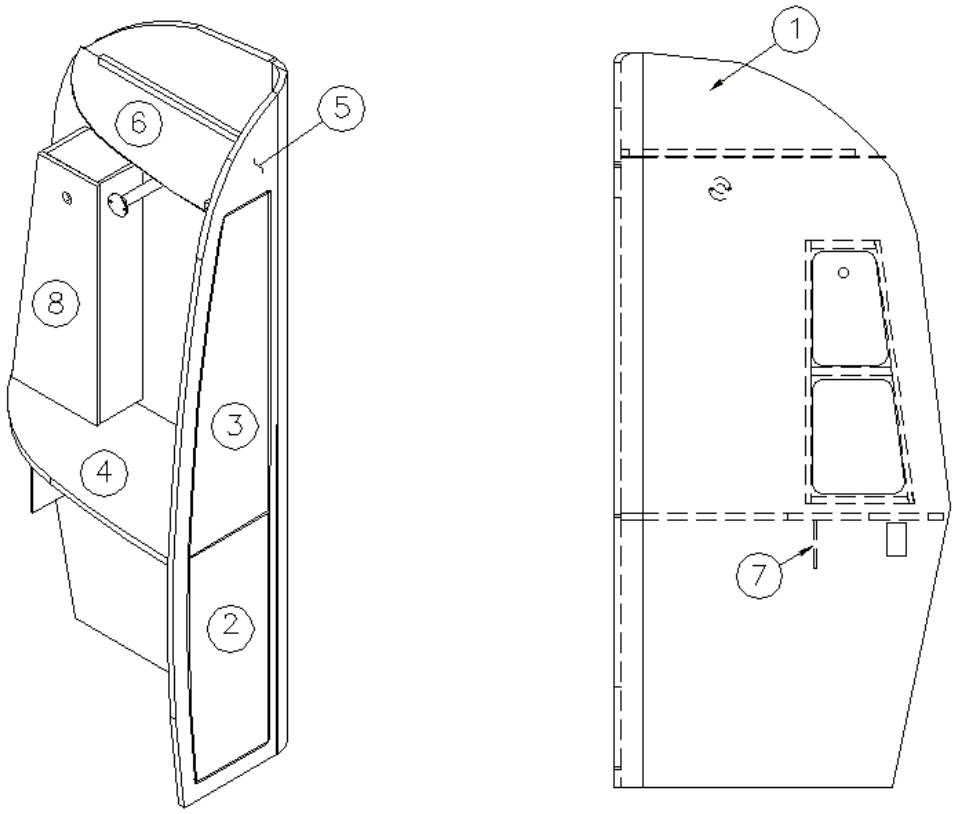

	966871	Left Rear Closet
	966871-23	Left Rear Closet, 28’ A2GO
1.	966871-1	Panel, 32.25 x 76.61
2.	966871-02	Door, 10.49 x 25.88
3.	966871-03	Door, 10.41 x 36.31
4.	966871-4	Panel, 34.35 x 15.75
5.	966871-5	Panel, 13.69 x 75.12
6.	966871-6	Panel, 27.38 x 10.5
7.	966871-19	Panel, 5 x 13.78
8.	966875	Bookshelf assembly, CS
	382029-00	Handle bar, 7.48
	381607-11	Hinge, Self-close
	381228-02	Catch, Grabber door, (5lb Pull)
	380046	Flange, Chrome
	380045	Tubing, .75”
	200975-04	Conduit, Flexible Black plastic
	386106-01	Magazine rack, White
	386107	Rod, Magazine rack
	203440	T-molding, .8125, Black Embossed

2018 INTERNATIONAL
FURNITURE, BEDROOM

Closet, Left Rear, 28’, 30’ Serenity

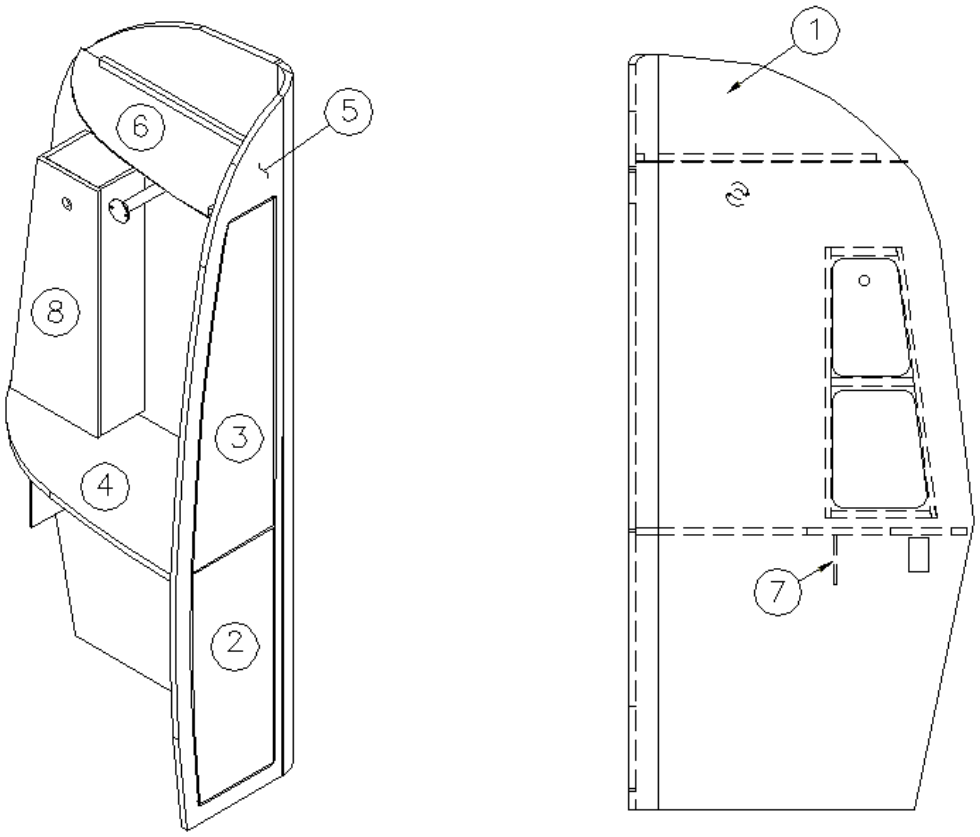

	966871-15	Left Rear Closet
1.	966871-151	Panel, 32.25 x 76.61
2.	966871-152	Door, 10.49 x 25.88
3.	966871-153	Door, 10.41 x 36.31
4.	966871-4	Panel, 34.35 x 15.92
5.	966871-155	Panel, 13.69 x 75.7
6.	966871-156	Panel, 29 x 10.81
7.	966871-1519	Panel, 5 x 13.78
8.	966875-15	Bookshelf assembly, CS
	382115	Pull, Flat Black
	381607-11	Hinge, Self-close
	381228-02	Catch, Grabber Door, (5lb Pull)
	386106-01	Magazine rack, White
	386107	Rod, Magazine rack
	203693	T-molding, .8125, Beige Embossed
	380046	Flange, Chrome
	380045	Tubing, ¾”
	200975-04	Conduit, Flexible Black plastic

2018 INTERNATIONAL
FURNITURE, BEDROOM

Closet, Right Rear, 28’, 30’ Signature

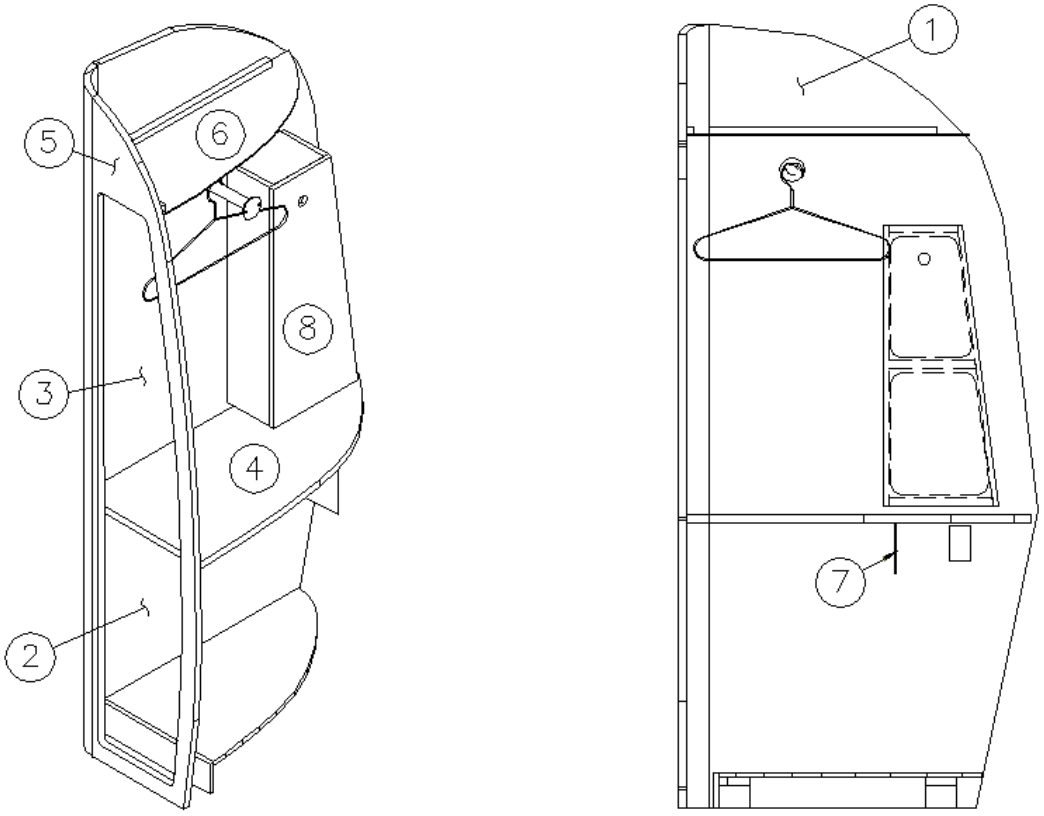

	966872	Right Rear Closet
	966872-23	Right Rear Closet, 28’ A2GO
1.	966872-1	Panel, 32.25 x 76.61
2.	966872-02	Door, 10.06 x 26.06
3.	966872-03	Door, 10.06 x 36.5
4.	966872-4	Panel, 34.35 x 15.92
5.	966872-5	Panel, 13.69 x 75.7
6.	966872-6	Panel, 29 x 10.81
7.	966872-19	Panel, 5 x 13.78
8.	966874	Bookshelf assembly, CS
	382029-00	Handle bar, 7.48
	381607-11	Hinge, Self-close
	381228-02	Catch, Grabber door, (5lb Pull)
	386106-01	Magazine rack, White
	386107	Rod, Magazine rack
	203440	T-molding, .8125, Black Embossed
	380046	Flange, Chrome
	380045	Tubing, ¾”
	200975-04	Conduit, Flexible Black plastic

2018 INTERNATIONAL
FURNITURE, BEDROOM

Closet, Right Rear, 28’, 30’ Serenity

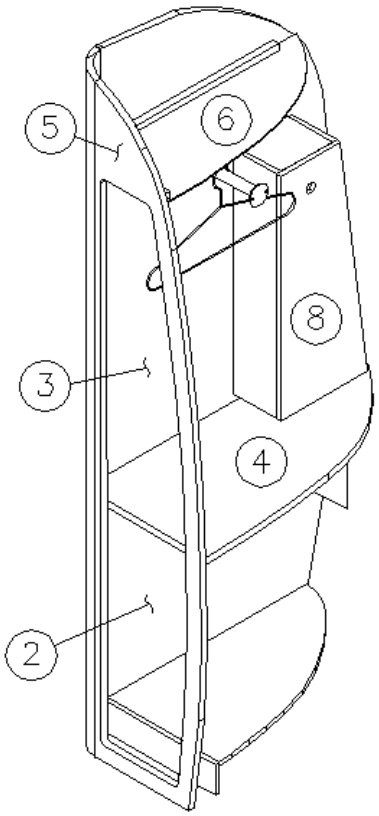

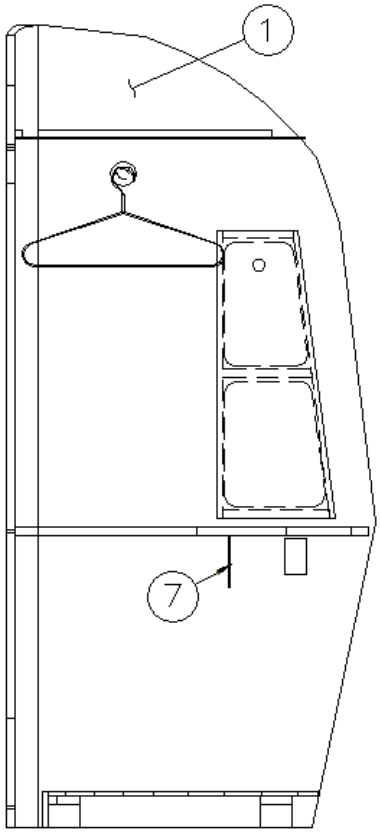

	966872-15	Right Rear Closet
1.	966872-151	Panel, 32.25 x 76.61
2.	966872-152	Door, 10.49 x 25.88
3.	966872-153	Door, 10.41 x 36.31
4.	966872-4	Panel, 34.35 x 15.92
5.	966872-155	Panel, 13.69 x 75.65
6.	966872-156	Panel, 29 x 10.81
7.	966872-1519	Panel, 5 x 13.78
8.	966874-15	Bookshelf assembly, RS
	382115	Pull, Flat Black
	381607-11	Hinge, Self-close
	381228-02	Catch, Grabber door, (5lb Pull)
	386106-01	Magazine rack, White
	386107	Rod, Magazine Rack
	203693	T-molding, .8125, Beige Embossed
	380046	Flange, Chrome
	380045	Tubing, ¾”
	200975-04	Conduit, Flexible Black plastic

Roof Locker, Rear Corner, 23CB Signature

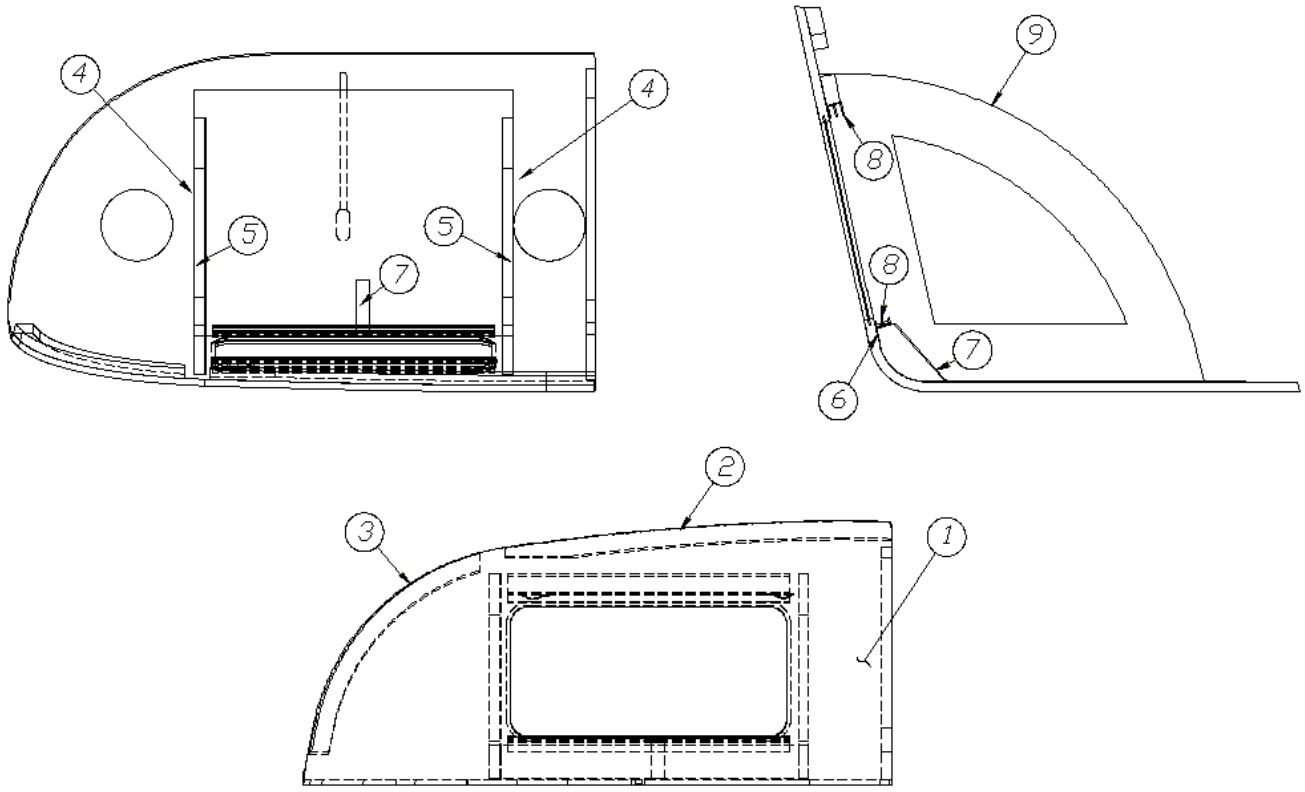

	966933-02	Rear Corner Liner Locker
1.	801730	Face, Rear corner
2.	801596-01	Backer, Center
3.	801596-02	Backer, LH
4.	801594	Divider
5.	801595-12	Divider w/USB ports
6.	115261-04	Angle, Formed locker track support
7.	115226-01	Bracket, Formed, Center support
8.	203388	Sliding door track, 22"
9.	115264-04	Pan, Rear
	801998	L-support
	203749-05	Door, 11.31 x 11.75
	203445	T-molding, Flexible Black poly
	201673	Reverse cove molding, White
	703991	Pile seal weather strip
	512720	Spot light w/frosted lens, LED, Surfaced mount

2018 INTERNATIONAL
FURNITURE, BEDROOM

Roof Locker, Rear Corner, 23CB Serenity

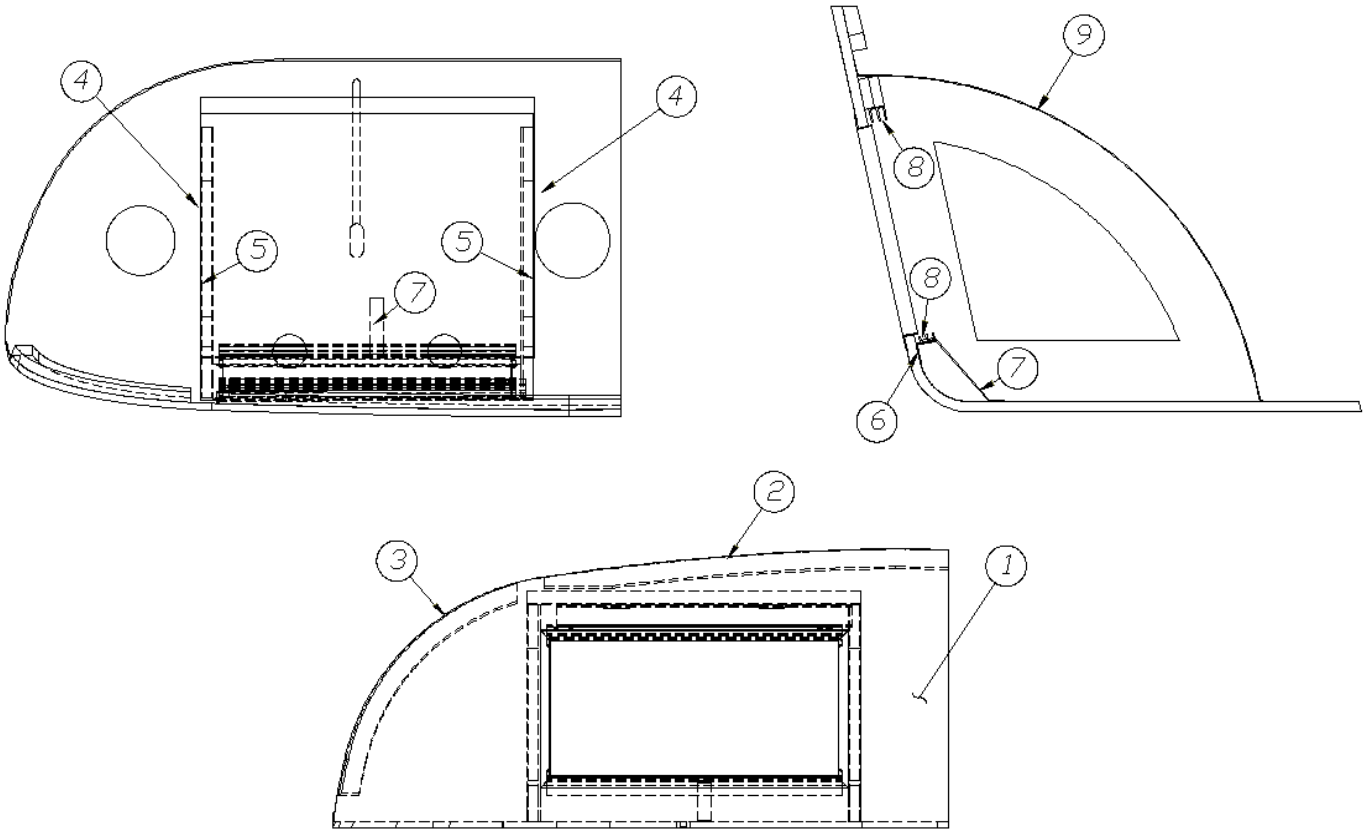

	967550-15	Rear Corner Roof Locker
1.	801825	Face, Rear
2.	801596-01	Backer, Center
3.	801596-02	Backer, LH
4.	801594	Divider
5.	801595-12	Divider w/USB ports
6.	114812	Angle, Formed, 22”
7.	115226-01	Bracket, Formed, Center support
8.	381245	Sliding door track, 22"
9.	115264-04	Pan, NB rear corner
	203677-05	Door, 11.31 x 11.75
	382114	Knob, Brushed Satin Nickel
	512720	Spot light w/frosted lens, LED, Surfaced mount
	703991	Pile seal weather strip
	201673	Reverse cove molding, White

2018 INTERNATIONAL
FURNITURE, BEDROOM

Roof Locker, Front End, 23FB Signature

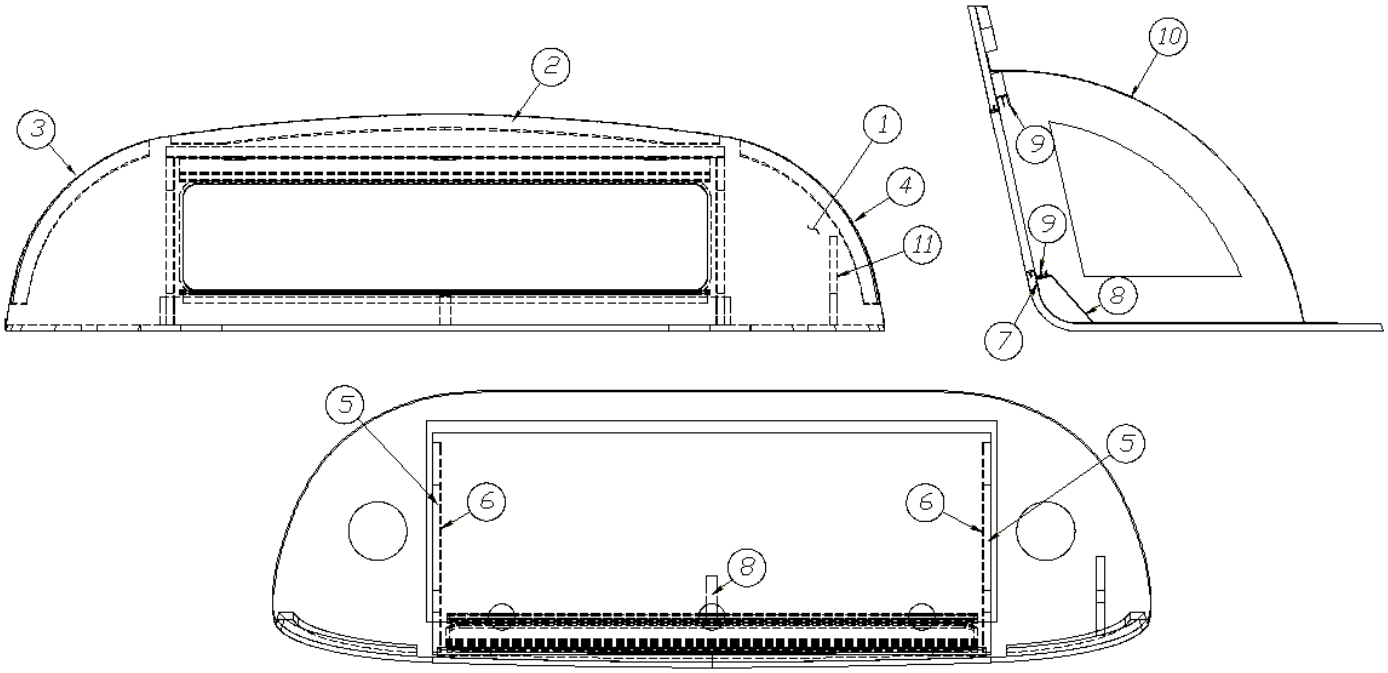

	967645	Front End Roof Locker
1.	801887	Face, NB
2.	801596-01	Backer, Center
3.	801596-02	Backer, LH
4.	801596-03	Backer, RH
5.	801594	Divider
6.	801595	Divider w/laminate
7.	115261-02	Angle, Formed, Locker track support
8.	115226-01	Bracket, Formed, Center support
9.	203388	Track, Sliding door
10.	115264-02	Pan, NB front
11.	801710	Support Divider
	203749-08	Door, 11.31 x 30
	801928	Laminate, Ebony Woods
	114879-238	Aluminum sheet, .04" x 33" x 238"
	203445	T-molding, .5625", Black
	201673	Reverse cove molding, White
	703991	Pile seal weather strip
	512720	Spot light w/frosted lens, LED, Surfaced mount

2018 INTERNATIONAL
FURNITURE, BEDROOM

Roof Locker, Front End, 23FB Serenity

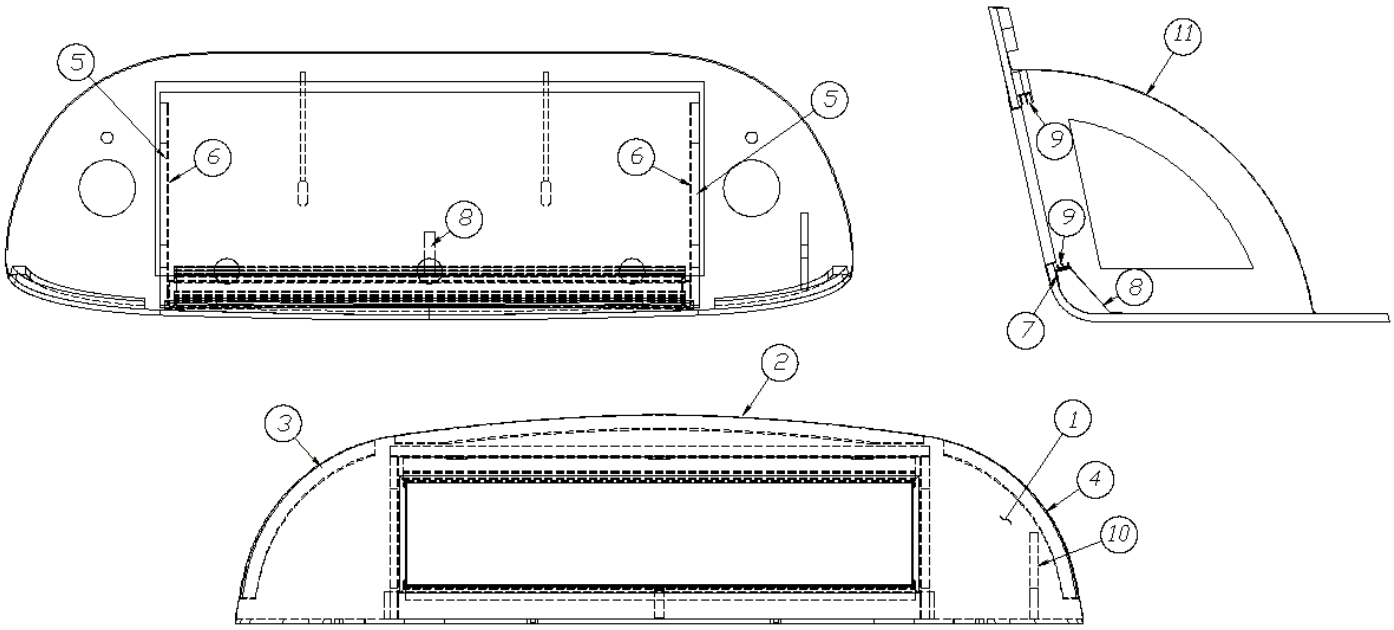

	967646	Front End Roof Locker
1.	801888	Face, Front
2.	801596-01	Backer, Center
3.	801596-02	Backer, LH
4.	801596-03	Backer, RH
5.	801594	Divider
6.	801595	Divider w/laminate
7.	114812	Aluminum angle, 1 x 1
8.	115226-01	Bracket, Formed, Center support
9.	203388	Track, Sliding Door
10.	801710	Support Divider
11.	115264-02	Pan, NB front
	203677-03	Door, 11.31 x 30
	382114	Knob, Brushed Satin Nickel
	201673	Reverse cove molding, White,
	801355-01	Laminate, Vertical, Frosty White
	703991	Pile seal weather strip
	512720	Spot light w/frosted lens, LED, Surfaced mount

2018 INTERNATIONAL
FURNITURE, BEDROOM

Roof Locker, Rear Endliner, 25’ Signature

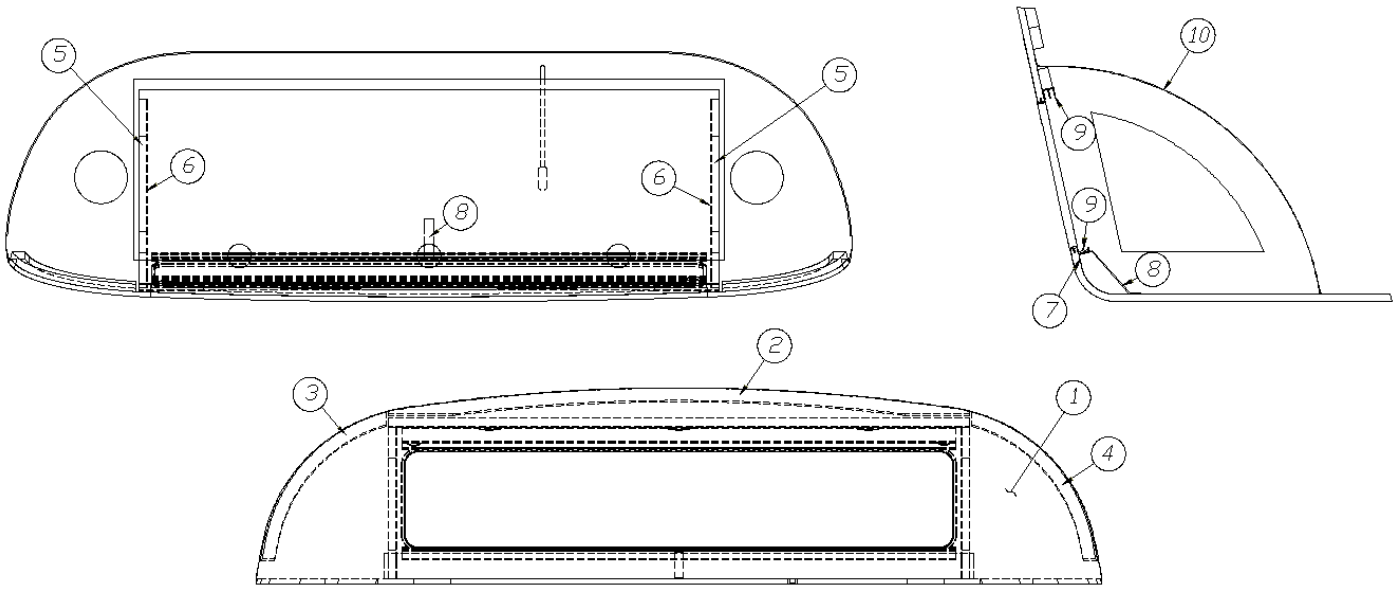

	967765	Rear Endliner Roof Locker
1.	801910	Face, Liner Locker
2.	801596-01	Backer, Center
3.	801596-02	Backer, LH
4.	801596-03	Backer, RH
5.	801594	Divider
6.	801595	Divider w/laminate
7.	115261-01	Angle, Formed
8.	115226-01	Bracket, Formed, Locker center support
9.	203388	Track, Sliding door
10.	115264-01	Pan, WB front
	203749-08	Door, 11.31 x 30
	203445	T-molding, Flexible Black poly
	203445-01	T-molding, .5625", White
	801355-01	Laminate, Vertical, Frosty White
	703991	Pile seal weather strip
	512720	Spot light w/frosted lens, LED, Surfaced mount

2018 INTERNATIONAL
FURNITURE, BEDROOM

Roof Locker, Rear Endliner, 25’ Serenity

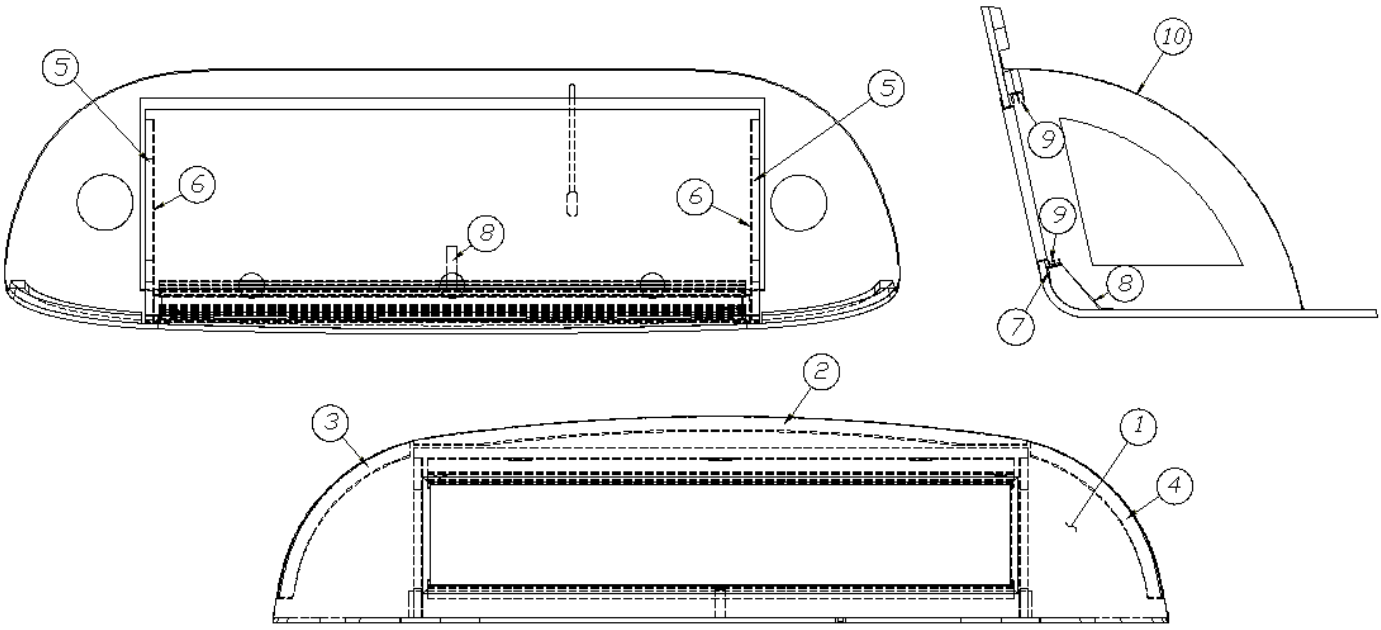

	967780-15	Rear Endliner Roof Locker
1.	801913-15	Face, Liner locker
2.	801596-01	Backer, WB center
3.	801596-02	Backer, LH
4.	801596-03	Backer, RH
5.	801594	Divider, Liner Locker
6.	801595	Divider w/laminate
7.	114812	Aluminum angle, 1 x 1
8.	115226-01	Bracket, Formed, Locker center support
9.	203388	Track, Sliding door
10.	115264-01	Pan, WB front
	203677-03	Door, 11.31 x 30
	115483	Aluminum angle, .75”
	382114	Knob, Brushed Satin Nickel
	201673	Reverse cove molding, White
	801355-01	Laminate, Vertical, Frosty White
	512720	Spot light w/frosted lens, LED, Surfaced mount
	703991	Pile seal weather strip

2018 INTERNATIONAL
FURNITURE, BEDROOM

Roof Locker, Front Endliner, 25FB, 27FB Signature

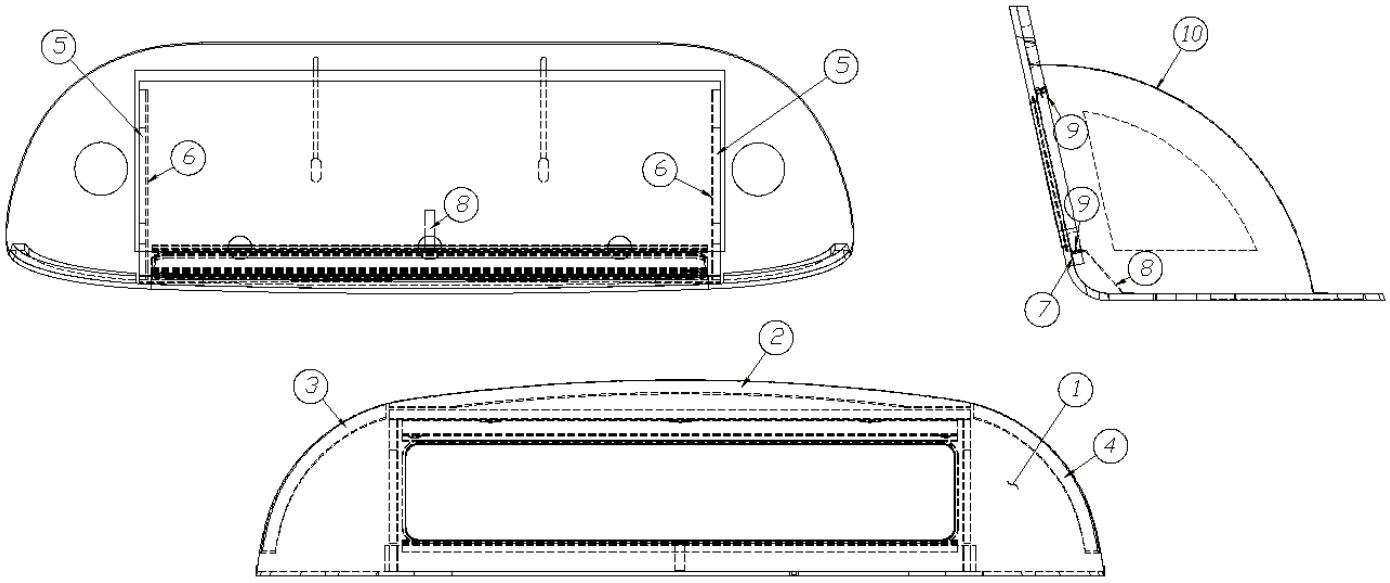

	966870	Front End Roof Locker, 25FB
	966870-02	Front End Roof Locker, 27FB
1.	801723	Face, Liner locker, 25FB
	801958	Face, Liner locker w/USB, 27FB
2.	801596-01	Backer, WB center
3.	801596-02	Backer, LH
4.	801596-03	Backer, RH
5.	801594	Divider, Liner locker
6.	801595	Divider w/laminate
7.	115261-01	Angle, Formed
8.	115226-01	Bracket, Formed, Locker center support
9.	203388	Track, Sliding door
10.	115264-01	Pan, WB front
	203749-08	Door, Sliding, 11.31 x 30
	801355-01	Laminate, Frosty White
	203445	T-molding, Flexible Black poly
	201673	Reverse cove molding, White
	703991	Pile seal weather strip
	512720	Spot light w/frosted lens, LED, Surfaced mount

2018 INTERNATIONAL
FURNITURE, BEDROOM

Roof Locker, Front Endliner, 25FB, 27FB Serenity

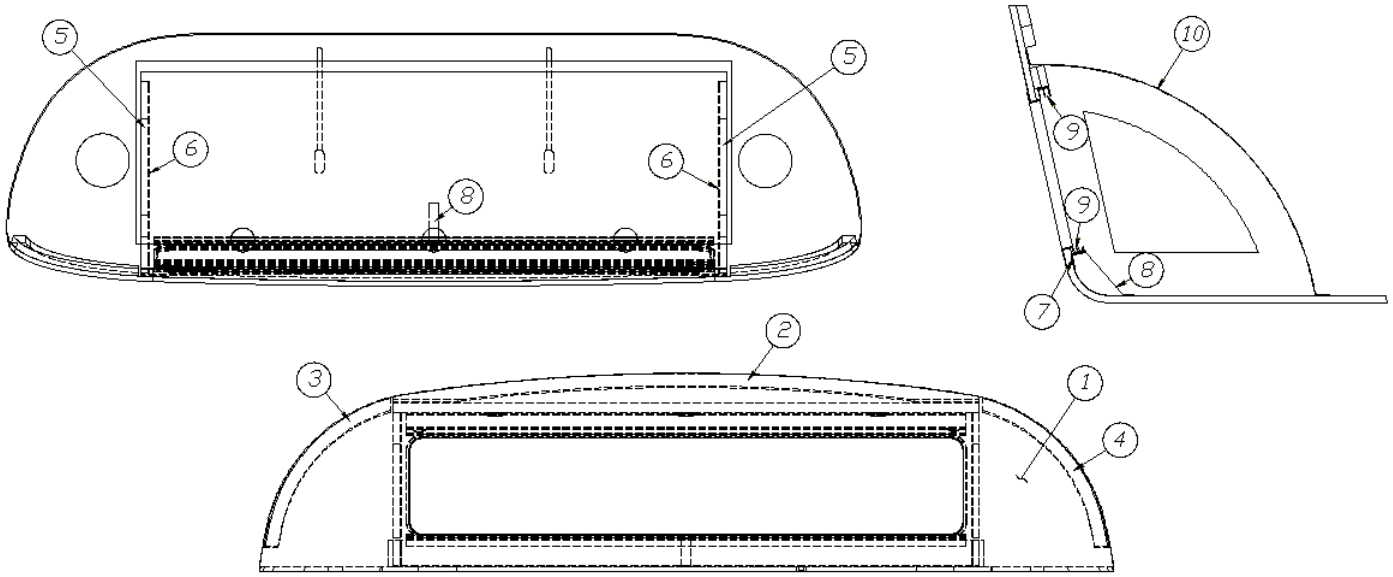

	967555-15	Front Endliner Roof Locker, 25FB
	967555-01	Front Endliner Roof Locker, 27FB
1.	801848	Face, Liner locker, 25FB
	801959	Face, Liner locker, 27FB
2.	801596-01	Backer, WB center
3.	801596-02	Backer, LH
4.	801596-03	Backer, RH
5.	801594	Divider, Liner locker
6.	801595	Divider w/laminate
7.	114812	Angle, Formed, 1 x 1
8.	115226-01	Bracket, Formed, Locker center support
9.	203388	Track, Sliding door
10.	115264-01	Pan, Liner Locker WB front
	203677-03	Door, Mari, 11.31 x 30
	382114	Knob, Brushed Satin Nickel
	801355-01	Laminate, Frosty White
	201673	Reverse cove molding, White
	703991	Pile seal weather strip
	512720	Spot light w/frosted lens, LED, Surfaced mount

Roof Locker, Center, 28’, 30’ Signature

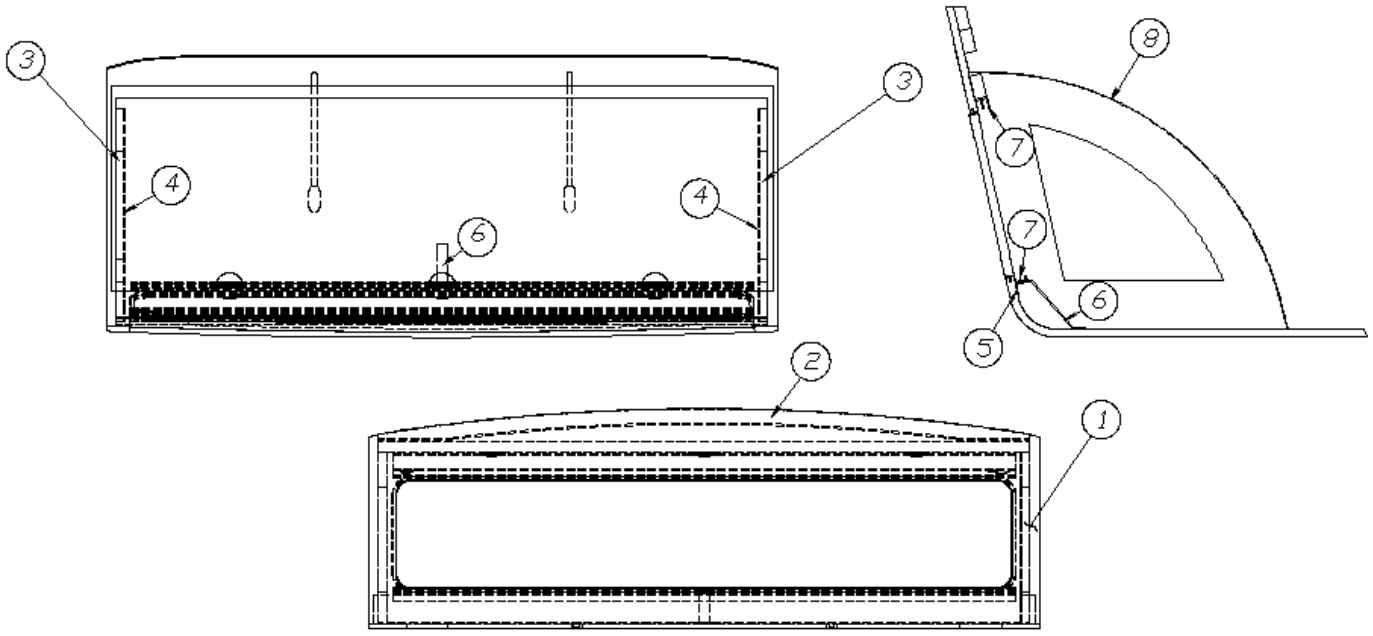

	966862	Center Roof Locker
1.	801720	Face, WB rear
2.	801596-01	Backer WB center
3.	801594	Divider, Liner locker
4.	801721	Divider, Liner locker
5.	115261-01	Angle, Formed
6.	115226-01	Bracket, Formed, Locker center support
7.	203388	Track, Sliding door
8.	115264-01	Pan, WB front
	203749-08	Door, Sliding, 11.31 x 30
	801355-01	Laminate, Frosty White
	201673	Reverse cove molding, White
	203445	T-molding, .5625", Black
	703991	Pile seal weather strip
	512720	Spot light w/frosted lens, LED, Surfaced mount

2018 INTERNATIONAL
FURNITURE, BEDROOM

Roof Locker, Center, 28’, 30’ Serenity

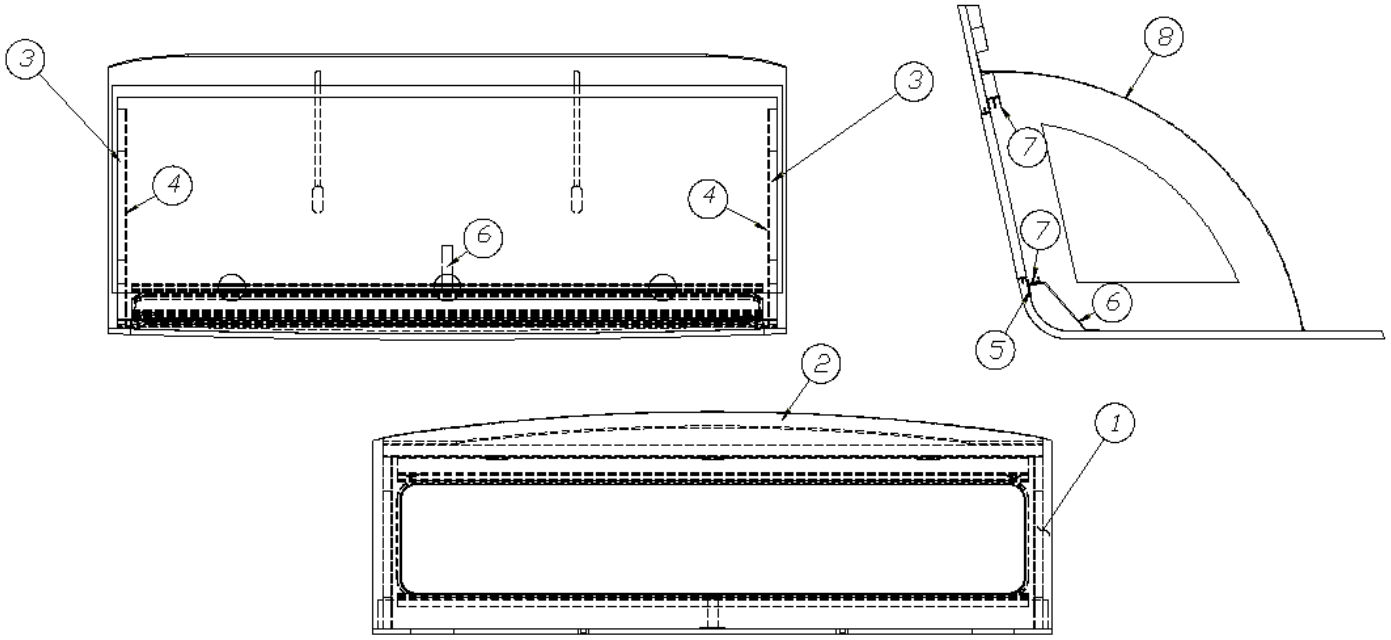

	967557-15	Center Roof Locker
1.	801850	Face, WB rear
2.	801596-01	Backer WB center
3.	801594	Divider, Liner Locker
4.	801721	Divider, Liner Locker
5.	114812	Angle, Formed, 1 x 1
6.	115226-01	Bracket, Formed, Locker center support
7.	203388	Track, Sliding door
8.	115264-01	Pan, WB front
	203677-03	Door, Sliding, 11.31 x 30
	201673	Reverse cove molding, White
	111586	Leaf spring install
	801355-01	Laminate, Frosty White
	703991	Seal pile weather strip
	382114	Knob, Brushed Satin Nickel
	512720	Spot light w/frosted lens, LED, Surfaced mount

Rear Roof Locker, 30’ Twin, No Speakers

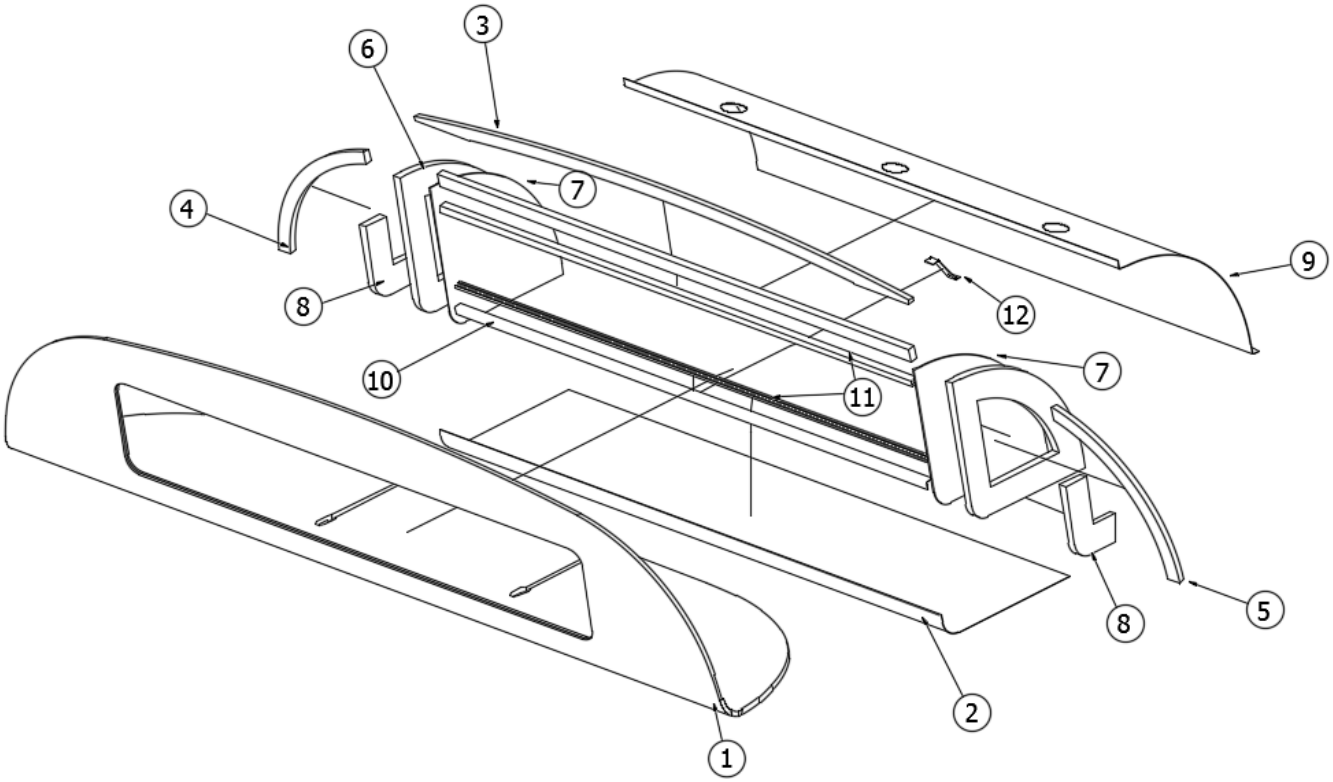

968887 End Locker, WB, No Speaker

1.	801593-09	Face, Endlocker, No Speaker
2.	090464-C	Laminate
3.	801596-01	Backer, WB Liner Locker Center
4.	801596-02	Backer, Liner Locker LH
5.	801596-03	Backer, Liner Locker RH
6.	801351	Divider, Liner Locker
7.	801595	Divider, Liner Locker W/Laminate
8.	801710	Support, Divider Liner Lockers
9.	115264-01	Pan, Liner Locker, WB Front
10.	115261-01	Formed Angle
11.	203388	Track, Sliding Door
12.	115226-01	Bracket, Formed Center Support
	512720	Spotlight, Surface mount, LED
	965563-08	Door Plexiglas, Sliding

2018 INTERNATIONAL
FURNITURE, BEDROOM

Wardrobe, Roadside, 23CB Signature

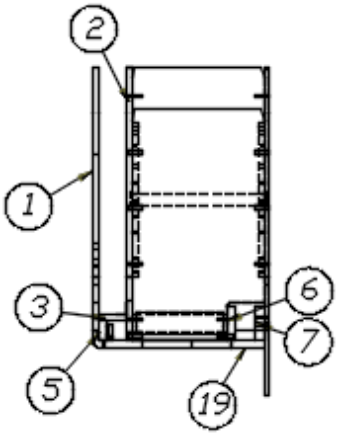

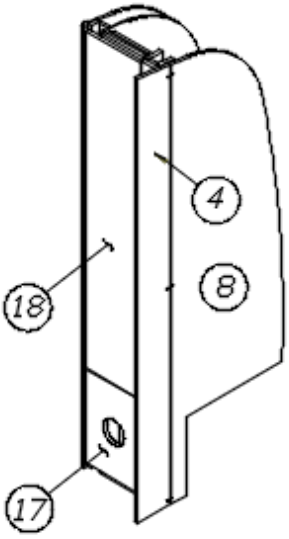

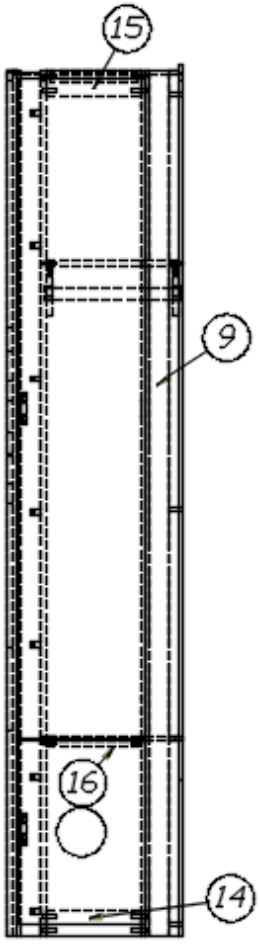

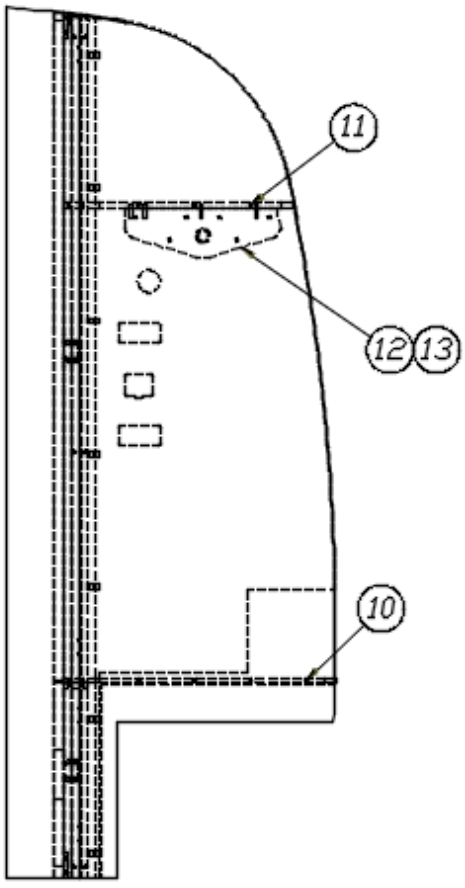

Parts Listed on Next Page

Wardrobe, Roadside, 23CB Signature

	966949	RS Wardrobe
1.	966949-1	Panel, 23.78 x 77.82
2.	966949-2	Panel, 24.56 x 786
3.	966949-3	Panel, 2.5 x 77.8
4.	966949-4	Panel, 6.6 x 78.53
5.	966949-5	Panel, 2.25 x 786
6.	966949-6	Panel, 3 x 78.06
7.	966949-7	Panel, 3 x 78.06
8.	966949-8	Panel, 23.05 x 77.83
9.	966949-9	Panel, 1.87 x 12
10.	966949-11	Panel, 11.89 x 24.59
11.	966949-12	Panel, 11.89 x 20.74
12.	966949-13	Panel, 14 x 4.49
13.	966949-14	Panel, 14 x 4.49
14.	966949-15I	Panel, 8.51 x 2.25
15.	966949-16	Panel, 8.51 x 2.25
16.	966949-17	Panel, 2.25 x 8.51
17.	966949-18	Door, 11.38 x 16.68
18.	966949-19	Door, 11.38 x 59.5
19.	966949-35	Panel, 2.94 x 78
	801706-0024	Corner trim, 90°, 1” radius, Ebony
	382029-03	Handle bar, 11.25"
	381607-11	Hinge, Self-close
	381228	Catch, Grabber door
	380045	Tubing, 3/4", Metal
	200975-04	Conduit, Flexible Black plastic
	203138-05	Extrusion, Plastic, .5", Black
	203138-01	Extrusion, Plastic, White
	115085	Aluminum angle

2018 INTERNATIONAL
FURNITURE, BEDROOM

Wardrobe, Roadside, 23CB Serenity

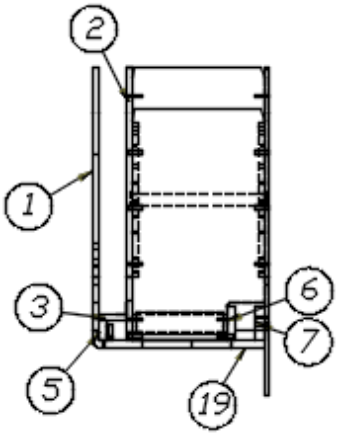

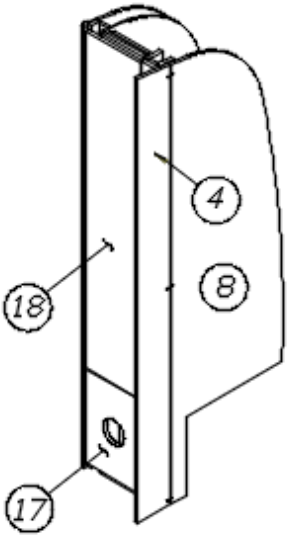

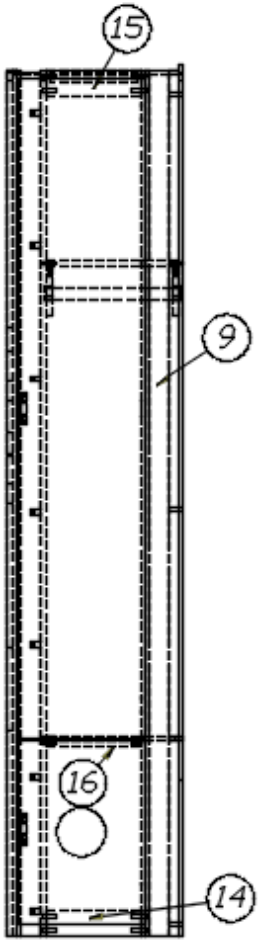

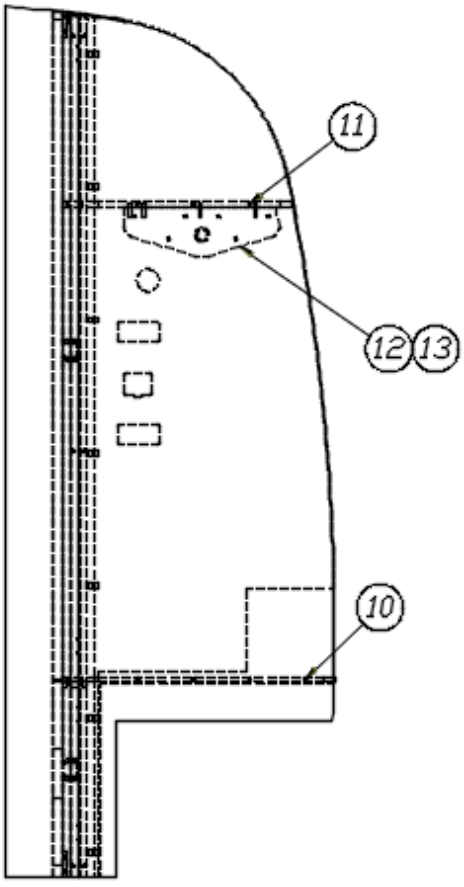

Parts Listed on Next Page

Wardrobe, Roadside, 23CB Serenity

	966949-15	RS Wardrobe
1.	966949-151	Panel, 23.78 x 77.82
2.	966949-152	Panel, 24.56 x 786
3.	966949-153	Panel, 2.5 x 77.8
4.	966949-154	Panel, 6.6 x 78.53
5.	966949-5	Panel, 1.75x 786
6.	966949-6	Panel, 3 x 78.06
7.	966949-7	Panel, 3 x 78.06
8.	966949-8	Panel, 23.05 x 77.83
9.	966949-9	Panel, 1.87 x 77.69
10.	966949-11	Panel, 11.89 x 24.59
11.	966949-12	Panel, 11.89 x 20.74
12.	966949-13	Panel, 14 x 4.49
13.	966949-14	Panel, 14 x 4.49
14.	966949-1515	Panel, 8.51 x 2.25
15.	966949-1516	Panel, 8.51 x 2.25
16.	966949-17	Panel, 2.25 x 8.51
17.	966949-1518	Door, 11.38 x 16.68
18.	966949-1519	Door, 11.38 x 59.5
19.	966949-1535	Panel, 2.94 x 78
	801706-0018	Corner trim, 90°, 1” radius, Asian Sand
	382115	Pull, Flat Black
	381607-11	Hinge, Self-close
	381228	Catch, Grabber door
	380045	Tubing, 3/4", Metal
	200975-04	Conduit, Black plastic
	203138-03	Extrusion, Plastic wall, Beige
	115085	Aluminum angle

2018 INTERNATIONAL
FURNITURE, BEDROOM

Wardrobe, Roadside, 23FB Signature

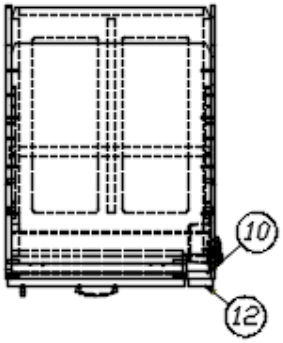

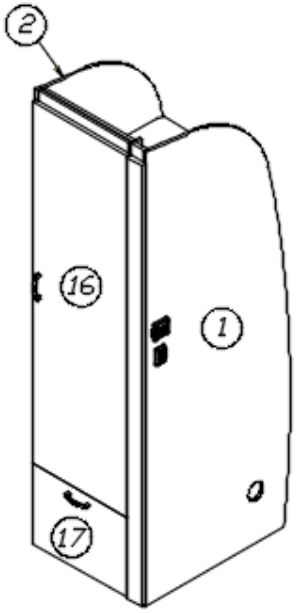

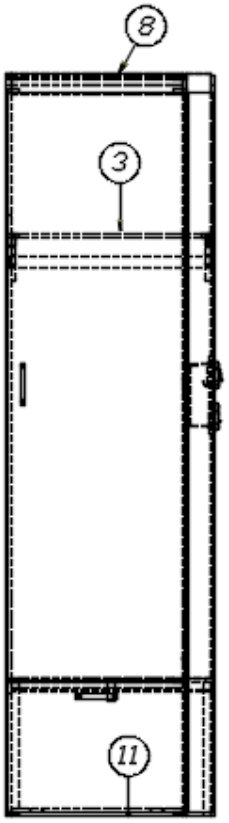

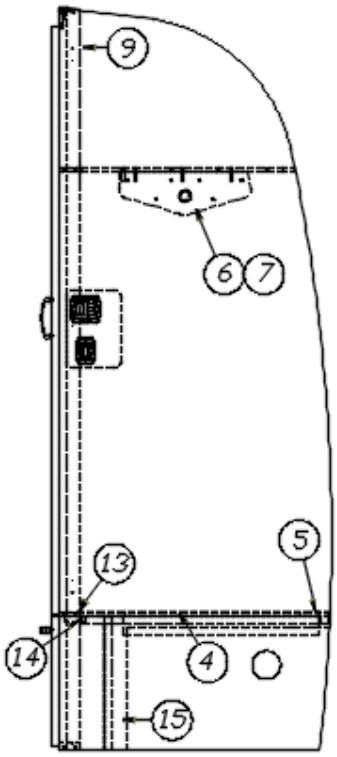

Parts Listed on Next Page

Wardrobe, Roadside, 23FB Signature

	967308	RS Wardrobe
1.	967308-1	Panel, 28.79 x 78.24
2.	967308-2	Panel, 28.79 x 78.24
3.	967308-3	Panel, 24.88 x 21
4.	967308-4	Panel, 21 x 26.25
5.	967308-5	Panel, 21 x 26.25
6.	967308-6	Panel, 14 x 4.5
7.	967308-7	Panel, 14 x 4.5
8.	967308-8	Panel, 2.25 x 18.06
9.	967308-9	Panel, 2.25 x 78.38
10.	967308-10	Panel, 2.44 x 78.38
11.	967308-11	Panel, 2.25 x 18.06
12.	967308-12	Panel, 2.69 x 76.44
13.	967308-13	Panel, 2.25 x 18.06
14.	967308-14	Panel, 2.25 x 18.06
15.	967308-29	Panel, 14.13 x 21
16.	967308-21	Door, 18.69 x 62.13
17.	967308-22	Door, 18.69 x 13.75”
	380045	Tubing, ¾”
	200975-04	Conduit, Flexible Black plastic
	381228	Catch, Grabber door
	701538-01	Carpet, Econolier, Velour Black
	381607-11	Hinge, Self-close
	382029-04	Handle, 15”
	203138-05	Extrusion, Plastic, ½”
	104821	Roof locker support

2018 INTERNATIONAL
FURNITURE, BEDROOM

Wardrobe, Roadside, 23FB Serenity

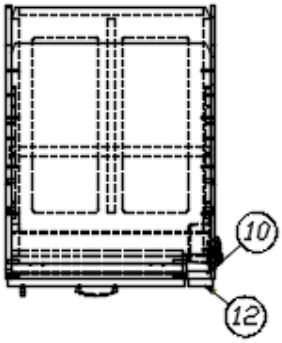

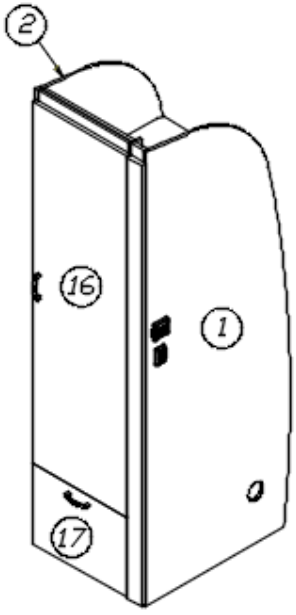

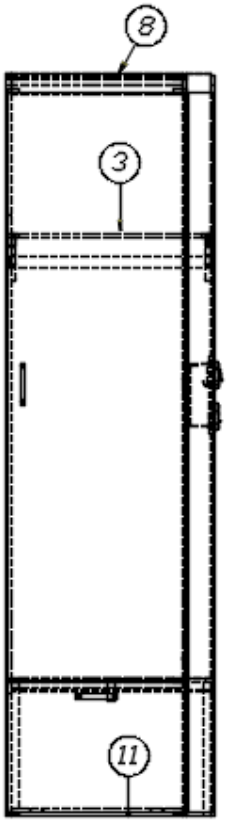

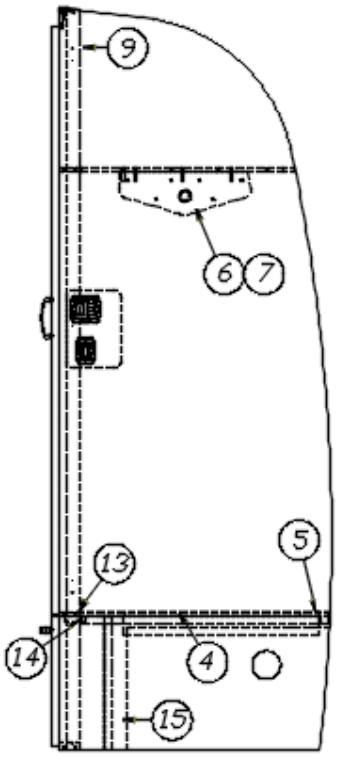

Parts Listed on Next Page

Wardrobe, Roadside, 23FB Serenity

	967308-15	RS Wardrobe
1.	967308-151	Panel, 28.79 x 78.24
2.	967308-152	Panel, 28.79 x 78.24
3.	967308-3	Panel, 24.88 x 21
4.	967308-4	Panel, 21 x 26.25
5.	967308-5	Panel, 21 x 26.25
6.	967308-6	Panel, 14 x 4.5
7.	967308-7	Panel, 14 x 4.5
8.	967308-158	Panel, 2.25 x 18.06
9.	967308-9	Panel, 2.25 x 78.38
10.	967308-1510	Panel, 2.44 x 78.38
11.	967308-11	Panel, 2.25 x 18.06
12.	967308-1512	Panel, 2.69 x 76.44
13.	967308-13	Panel, 2.25 x 18.06
14.	967308-14	Panel, 2.25 x 18.06
15.	967308-29	Panel, 13.13 x 21
16.	967308-1521	Door, 18.69 x 62.13
17.	967308-1522	Door, 18.69 x 13.75”
	380045	Tubing, ¾”
	200975-04	Conduit, Flexible Black plastic
	381228	Catch, Grabber door
	701538-01	Carpet, Econolier, Velour Black
	381607-11	Hinge, Self-close
	382115	Pull, Flat Black
	203138-03	Extrusion, Plastic ½”, Beige
	104821	Roof locker support

2018 INTERNATIONAL
FURNITURE, BEDROOM

Wardrobe with Drawers, 23FB A2GO, 23FB Signature

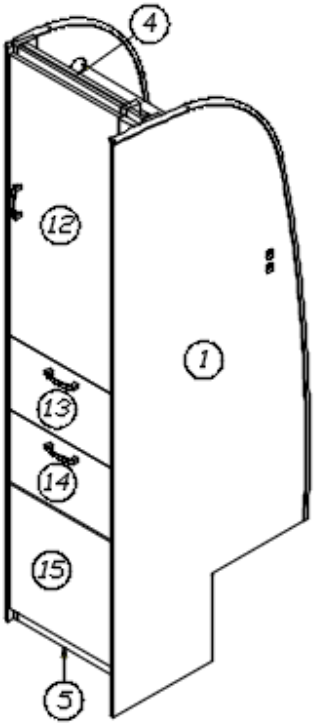

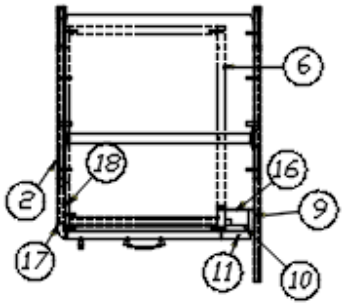

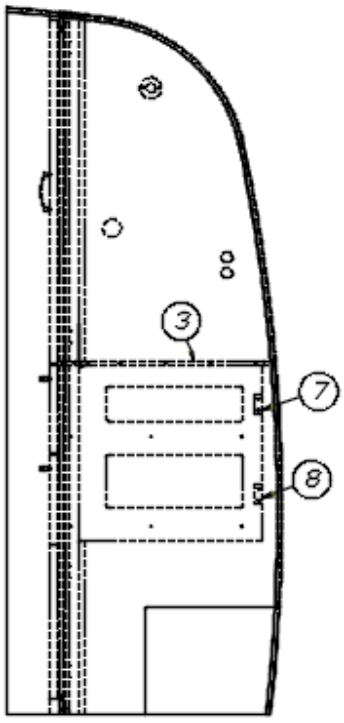

Parts Listed on Next Page

Wardrobe with Drawers, 23FB A2GO, 23FB Signature

	968031	Wardrobe w/Drawers, 23FB
	968031-01	Wardrobe w/Drawers, A2GO
1.	968031-1	Panel, 32.47 x 78.51, 23FB
	968031-34	Panel, 32.47 x 78.51, A2GO
2.	968031-2	Panel, 23.98 x 77.77
3.	968031-3	Panel, 24 x 21.75
4.	968031-4	Panel, 2.25 x 16.44
5.	968031-5	Panel, 2.25 x 16.44
6.	968031-6	Panel, 22.25 x 77.96
7.	968031-7	Panel, 17.94 x 2.25
8.	968031-8	Panel, 17.94 x 2.25
9.	968031-9	Panel, 2.25 x 77.96
10.	968031-10	Panel, 36 x 77.96
11.	968031-11	Panel, 3.19 x 75.25
12.	968031-12	Door, 17.06 x 38.13
13.	968031-13	Door, 17.06 x 9.88
14.	968031-14	Door, 17.06 x 9.88
15.	968031-15I	Door, 17.06 x 17
16.	968031-16	Panel, 4 x 3.31
17.	801706-0024	Corner trim, 90°, 1" radius, Ebony Woods
18.	968031-30	Panel, 3 x 77.96
	380045	Tubing, ¾”
	200975-04	Conduit, Flexible Black plastic
	380046	Flange, Chrome
	382203-05	Drawer slide, Self-close, 21” (PR)
	381228-02	Catch, Grabber door, (5lb pull), 23FB
	381228	Catch, Grabber door, (10lb pull), A2GO
	382029-04	Handle bar, 15”
	381607-11	Hinge, Self-close
	203138-05	Extrusion, Plastic, ½”, Black
	968028-02	Drawer box, 8” x 15.81" x 21”
	104821	Roof locker support
	382203-06	Front fixing clips (Pr.)

2018 INTERNATIONAL
FURNITURE, BEDROOM

Wardrobe with Drawers, 23FB Serenity

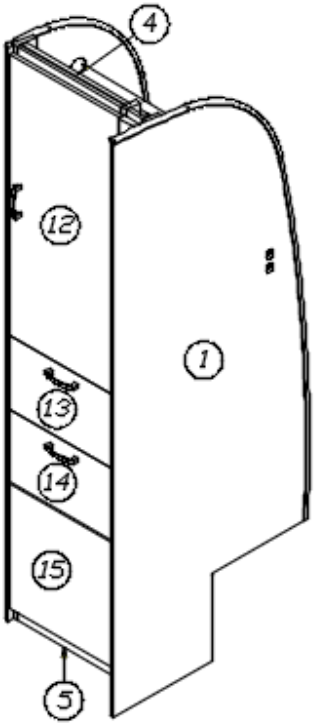

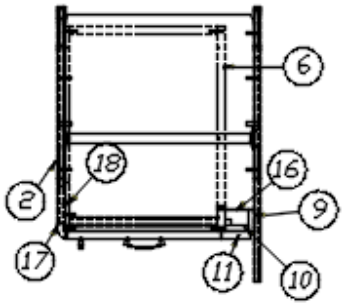

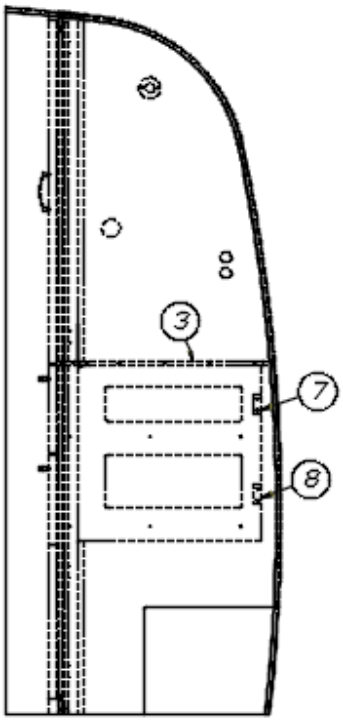

Parts Listed on Next Page

Wardrobe with Drawers, 23FB Serenity

	968031-15	Wardrobe w/Drawers
1.	968031-151	Panel, 32.47 x 78.51
2.	968031-152	Panel, 23.98 x 77.77
3.	968031-3	Panel, 24 x 21.75
4.	968031-154	Panel, 2.25 x 16.44
5.	968031-155	Panel, 2.25 x 16.44
6.	968031-6	Panel, 22.25 x 77.96
7.	968031-7	Panel, 17.94 x 2.25
8.	968031-8	Panel, 17.94 x 2.25
9.	968031-9	Panel, 2.25 x 77.96
10.	968031-1510	Panel, 36 x 77.96
11.	968031-1511	Panel, 3.19 x 75.25
12.	968031-1512	Door, 17.06 x 38.13
13.	968031-1513	Door, 17.06 x 9.88
14.	968031-1514	Door, 17.06 x 9.88
15.	968031-1515	Door, 17.06 x 17
16.	968031-16	Panel, 4 x 3.31
17.	801706-0018	Corner trim, 90°, 1" radius, Asian Sand
18.	968031-30	Panel, 3 x 77.96
	380045	Tubing, ¾”
	200975-04	Conduit, Flexible Black plastic
	380046	Flange, Chrome
	382203-05	Drawer slide, Self-close, 21” (PR)
	381228-02	Catch, Grabber door (5lb pull)
	382115	Pull, Flat Black
	381607-11	Hinge, Self-close
	203138-03	Extrusion, Plastic, ½”, Beige
	968028-02	Drawer box, 8” x 15.81" x 21”
	104821	Roof locker support
	382203-06	Front fixing clips (PR)

Wardrobe, 25’ Signature

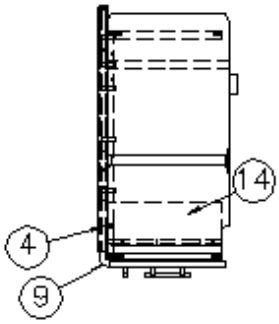

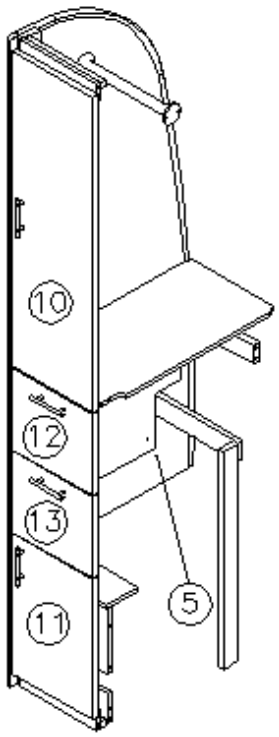

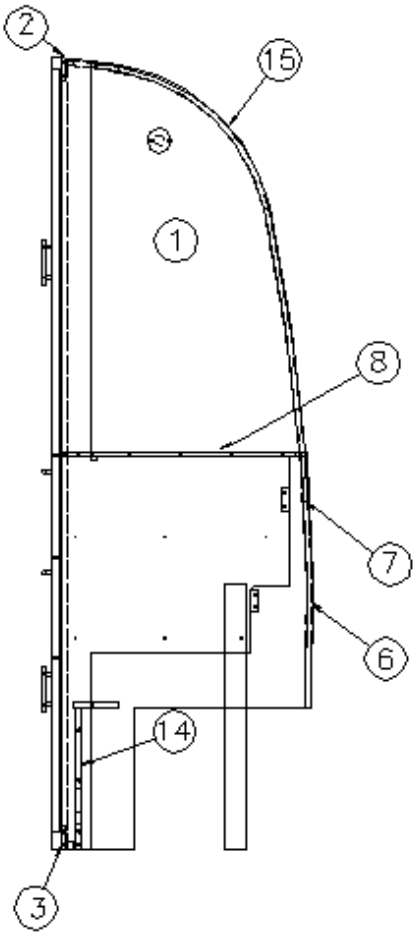

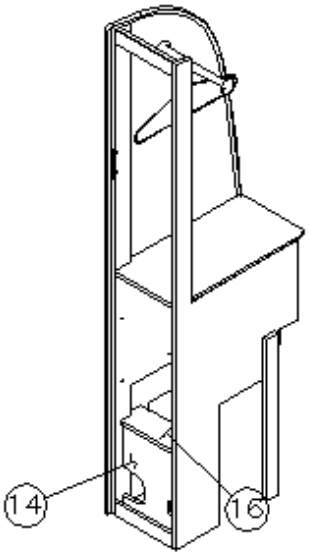

Parts Listed on Next Page

Wardrobe, 25’ Signature

	968033	RS Wardrobe
1.	968033-1	Panel, 24.09 x 77.95
2.	968033-2	Panel, 2.25 x 10.75
3.	968033-3	Panel, 2.25 x 10.75
4.	968033-4	Panel, 3 x 78.18
5.	968033-5	Panel, 22.25 x 78.18
6.	968033-6	Panel, 2.25 x 12.25
7.	968033-7	Panel, 2.25 x 12.25
8.	968033-8	Panel, 24.31 x 12.25
9.	801706-0024	Corner trim, 90°, 1" radius, Ebony
10.	968033-15I	Door, 11.38 x 38.13
11.	968033-16	Door, 11.38 x 17
12.	968033-17	Drawer Face, 11.38 x 9.88
13.	968033-18	Drawer Face, 11.38 x 9.88
14.	968033-26	Panel, 11.5 x 14
15.	203138-05	Extrusion, Plastic, .5", Black
16.	968033-29	Panel, 11.5 x 4.38
	381228-02	Catch, Grabber door (5lb Pull)
	381607-11	Hinge, Self-close
	968028-03	Drawer box, 8" x 10.13” x 21”
	968028-04	Drawer box, 8” x 0.13” x 18”
	382203-04	Drawer slide, Self-close, 18”
	382203-05	Drawer slide, Self-close, 21”
	382203-06	Front fixing clips (Pr)
	380046	Flange, Chrome
	380045	Tubing, .75", Elec. Metallic
	200975-04	Conduit, Flexible Black plastic

Wardrobe, 25’ Serenity

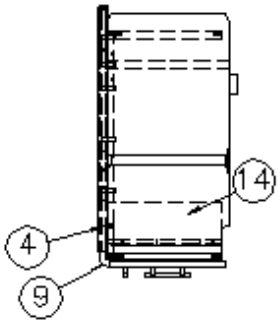

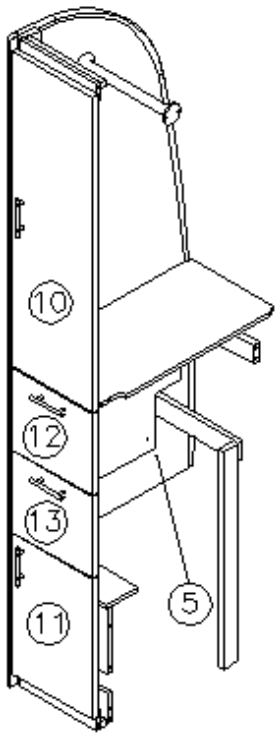

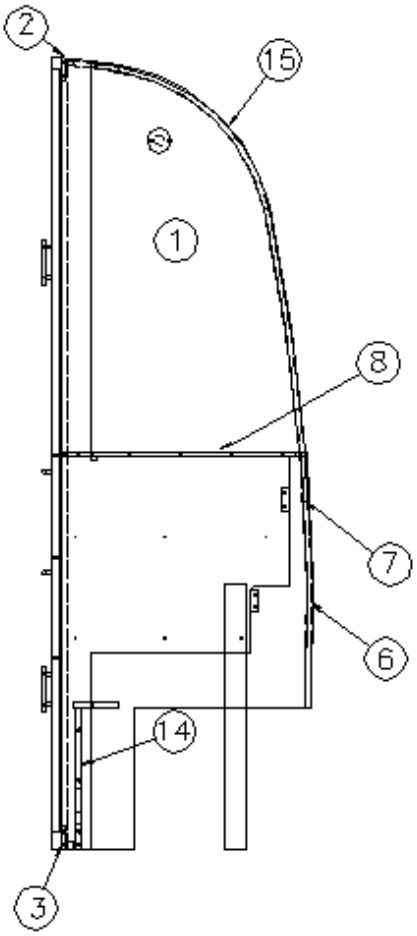

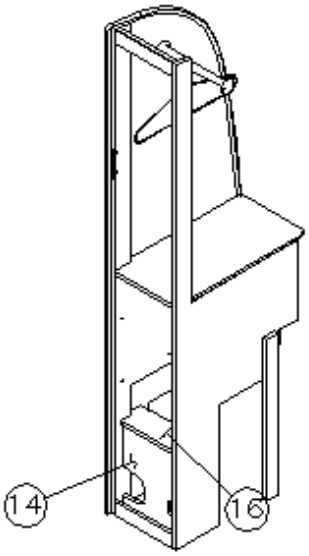

Parts Listed on Next Page

Wardrobe, 25’ Serenity

	968033-15	RS Wardrobe
1.	968033-151	Panel, 24.09 x 77.95
2.	968033-152	Panel, 2.25 x 10.75
3.	968033-153	Panel, 2.25 x 10.75
4.	968033-4	Panel, 3 x 78.18
5.	968033-5	Panel, 22.25 x 78.18
6.	968033-6	Panel, 2.25 x 12.25
7.	968033-7	Panel, 2.25 x 12.25
8.	968033-8	Panel, 24.31 x 12.25
9.	801706-0018	Corner trim, 90°, 1” radius, Asian Sand
10.	968033-1515	Door, 11.38 x 38.13
11.	968033-1516	Door, 11.38 x 17
12.	968033-1517	Drawer face, 11.38 x 9.88
13.	968033-1518	Drawer face, 11.38 x 9.88
14.	968033-26	Panel, 11.5 x 14
15.	203138-03	Extrusion, Plastic, ½”, Beige
16.	968033-29	Panel, 11.5 x 4.38
	381228-02	Catch, Grabber door (5lb Pull)
	381607-11	Hinge, Self-close
	968028-03	Drawer box, 8" x 10.13” x 21”
	968028-04	Drawer box, 8” x 0.13” x 18”
	382203-04	Drawer slide, Self-close, 18”
	382203-05	Drawer slide, Self-close, 21”
	382203-06	Front fixing clips (Pr)
	382115	Pull, Flat Black
	380046	Flange, Chrome
	380045	Tubing, 3/4", Elec. Metallic
	200975-04	Conduit, Flexible Black plastic

2018 INTERNATIONAL
FURNITURE, BEDROOM

Wardrobe with Drawers, 25FB Signature

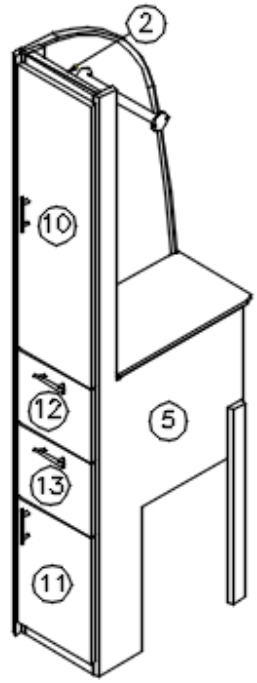

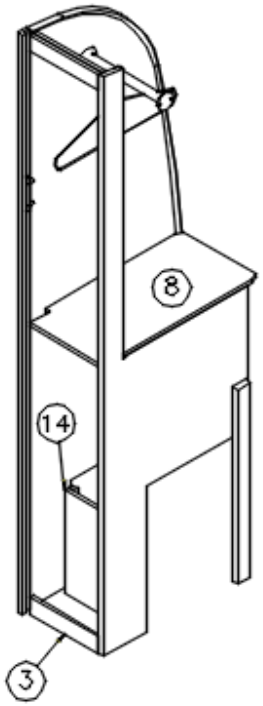

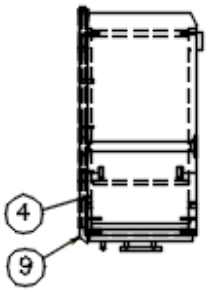

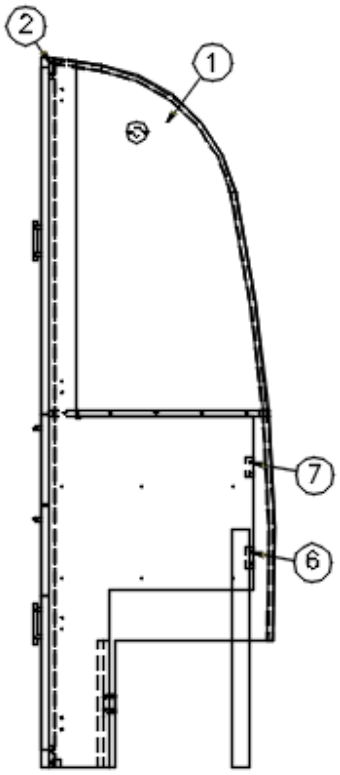

Parts Listed on Next Page

Wardrobe with Drawers, 25FB Signature

	968037	Wardrobe w/Drawers
1.	968037-1	Panel, 24.09 x 77.95
2.	968037-2	Panel, 10.75 x 2.25
3.	968037-3	Panel, 10.75 x 2.25
4.	968037-4	Panel, 22.63 x 78.18
5.	968037-5	Panel, 22.63 x 78.18
6.	968037-6	Panel, 2.25 x 10.75
7.	968037-7	Panel, 2.25 x 10.75
8.	968037-8	Panel, 24.31 x 12.25
9.	801706-0024	Corner trim, 90°, 1" radius, Ebony
10.	968037-15I	Door, 11.38 x 38.13
11.	968037-16	Door, 11.38 x 17
12.	968037-17	Door, 11.38 x 9.88
13.	968037-18	Door, 11.38 x 9.88
14.	968037-26	Panel, 11.38 x 14
	968028-03	Drawer box, 8” x 10.13” x 21”
	382203-05	Drawer slide, Self-close, 21”
	382203-06	Front fixing clips (Pr)
	380046	Flange, Chrome
	380045	Tubing, .75", Metallic
	200975-04	Conduit, Flexible Black plastic
	382029-00	Handle bar, 7.48"
	381228-02	Catch, Grabber door (5lb Pull)
	381607-11	Hinge, Self-close
	203138-05	Extrusion, Plastic, ½”, Black

2018 INTERNATIONAL
FURNITURE, BEDROOM

Wardrobe with Drawers, 25FB Serenity

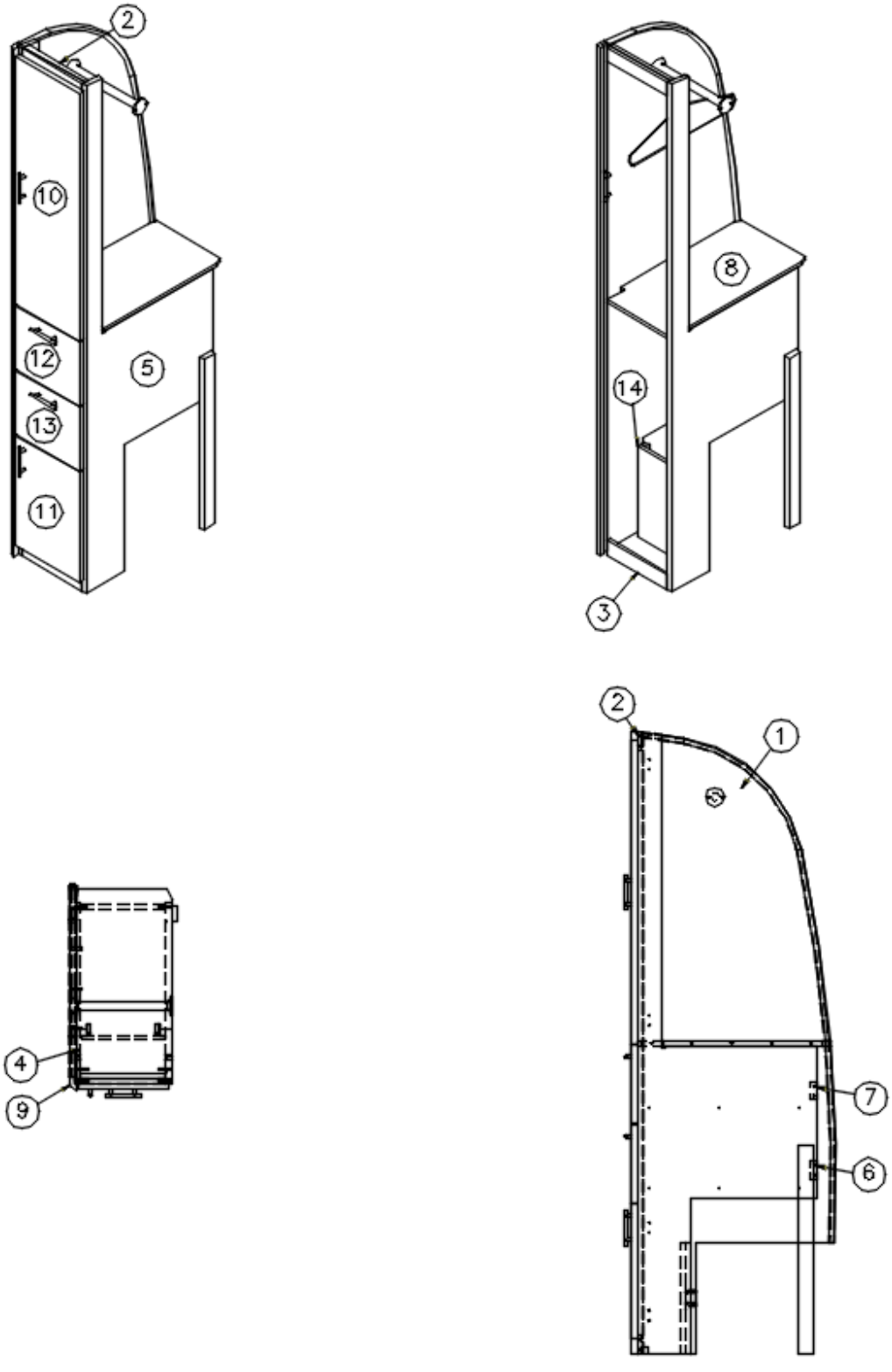

Parts Listed on Next Page

Wardrobe with Drawers, 25FB Serenity

	968037-15	Wardrobe w/Drawers
1.	968037-151	Panel, 24.09 5 x 77.95
2.	968037-152	Panel, 10.75 x 2.25
3.	968037-153	Panel, 10.75 x 2.25
4.	968037-4	Panel, 22.63 x 78.18
5.	968037-5	Panel, 22.63 x 78.18
6.	968037-6	Panel, 2.25 x 10.75
7.	968037-7	Panel, 2 x 10.75
8.	968037-8	Panel, 24.31 x 12.25
9.	801706-0018	Corner trim, 90°, 1" radius, Asian Sand
10.	968037-1515	Door, 11.38 x 38.13
11.	968037-1516	Door, 11.38 x 17
12.	968037-1517	Door, 11.38 x 9.88
13.	968037-1518	Door, 11.38 x 9.88
14.	968037-26	Panel, 12.125 x 14
	968028-03	Drawer box, 8" x 10.13” x 21”
	382203-05	Drawer slide, Self-close, 21”
	382203-06	Front fixing clips (Pr)
	380046	Flange, Chrome
	380045	Tubing, 3/4", Metallic
	200975-04	Conduit, Flexible Black plastic
	382115	Pull, Flat Black
	381228-02	Catch, Grabber door (5lb Pull)
	381607-11	Hinge, Self-close
	203138-03	Extrusion, Plastic ½”, Beige

2018 INTERNATIONAL
FURNITURE, BEDROOM

Wardrobe, RS Rear, 28’ A2GO, 28', 30’ Signature

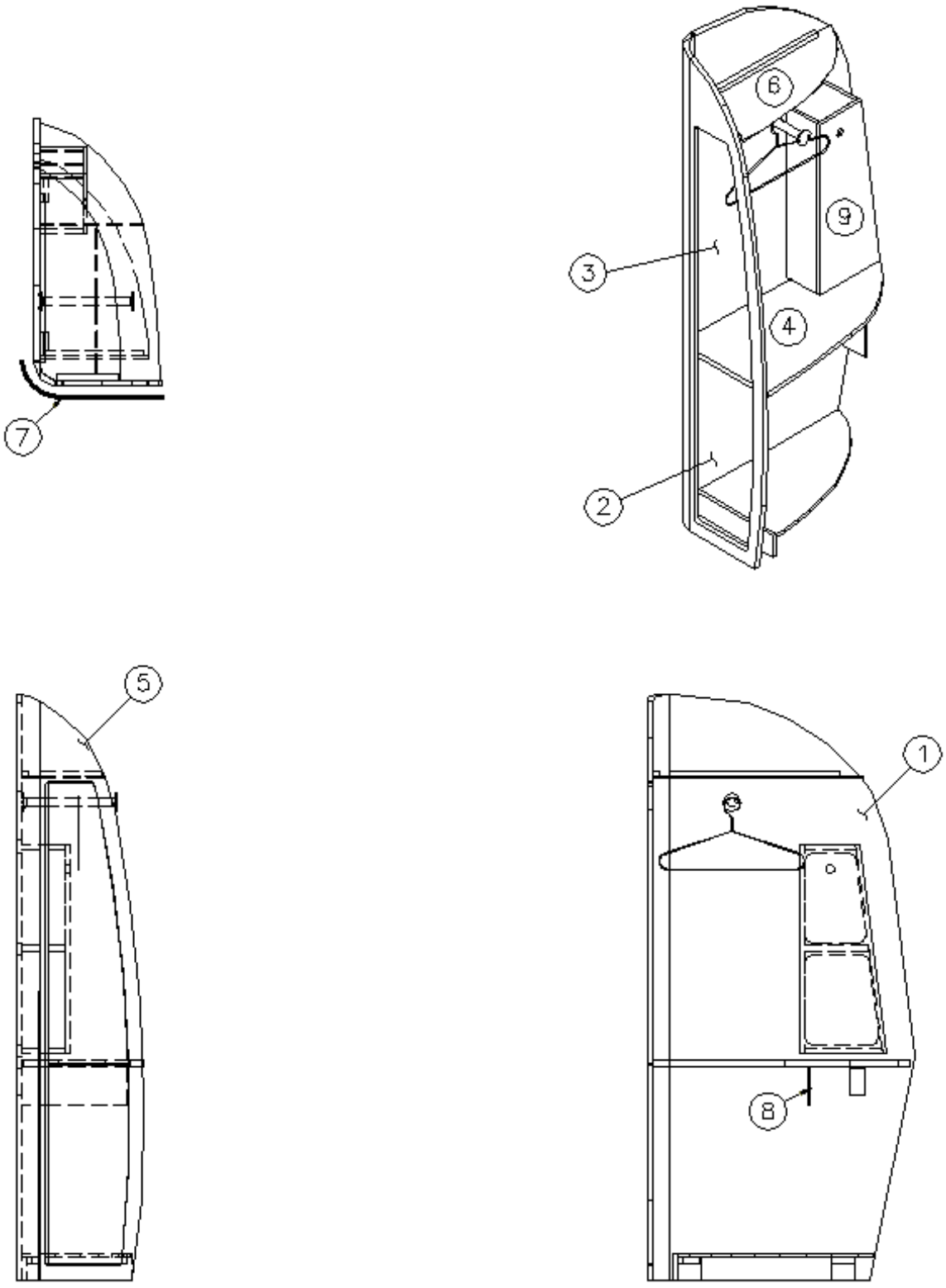

Parts Listed on Next Page

Wardrobe, RS Rear, 28’ A2GO, 28', 30’ Signature

	966872	Roadside Rear Wardrobe, 28’, 30’
	966872-23	Roadside Rear Wardrobe, 28’ A2GO
1.	966872-1	Panel, 31.79 x 76.13
2.	966872-02	Door, 10.49 x 25.88
3.	966872-03	Door, 10.41 x 36.31
4.	966872-4	Panel, 34.35 x 15.75
5.	966872-5	Panel, 13.69 x 75.13
6.	966872-6	Panel, 27.38 x 10.5
7.	966872-13	Panel, 18.5 x 76
8.	966872-19	Panel, 5 x 13.56
9.	966874	Bookshelf assembly
	381228-02	Catch, Grabber door (5lb Pull)
	381607-11	Hinge, Self-close
	382029-00	Handle bar, 7.48”
	380046	Flange, Chrome
	380045	Tubing, ¾”, Metallic
	200975-04	Conduit, Flexible Black plastic
	203440	T-molding, .8125, Black Embossed
	386106-01	Magazine rack, White, 28’ only
	386107	Rod, Magazine rack

2018 INTERNATIONAL
FURNITURE, BEDROOM

Wardrobe, RS Rear, 28', 30’ Serenity

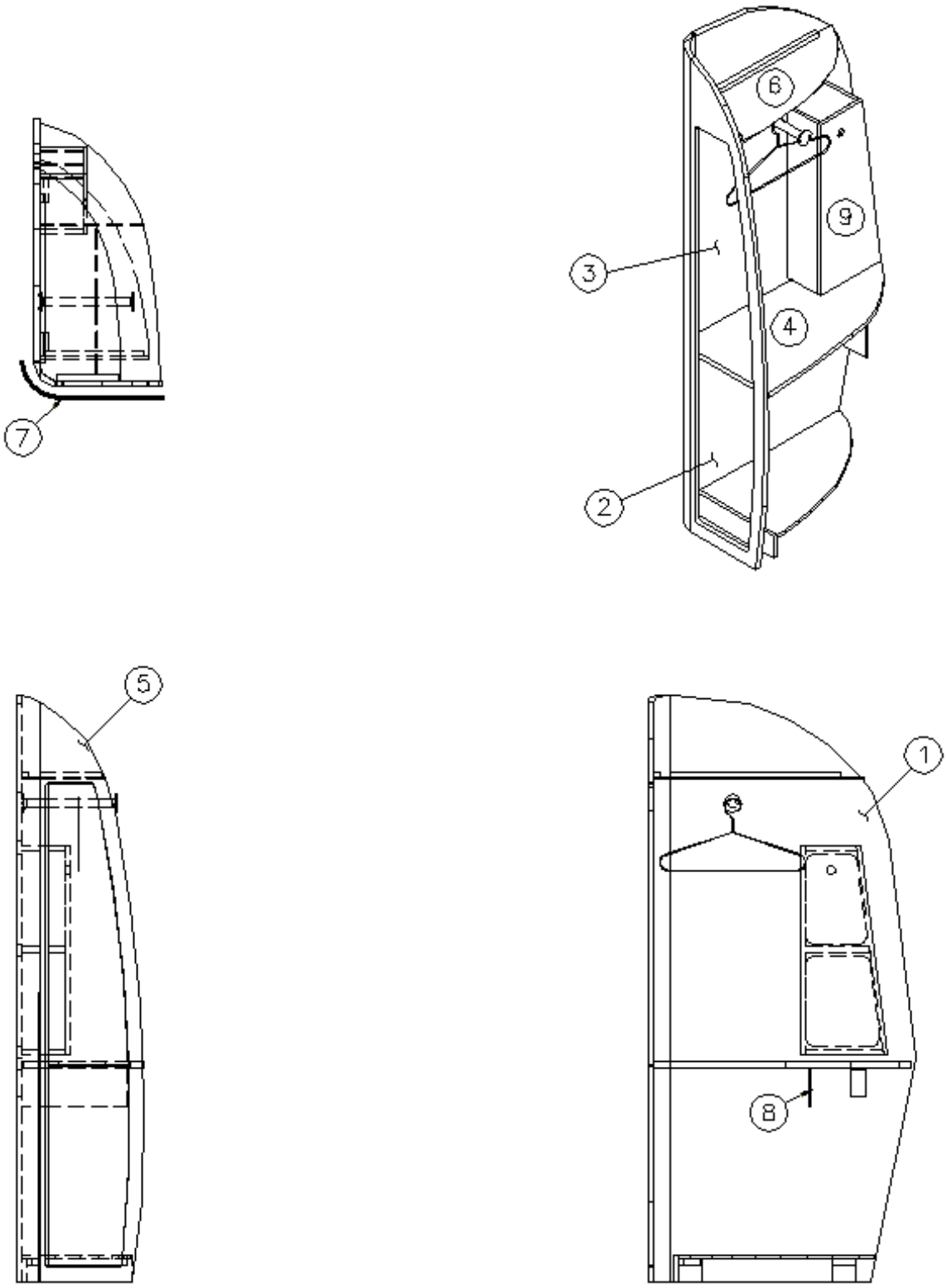

Parts Listed on Next Page

Wardrobe, RS Rear, 28', 30’ Serenity

	966872-15	Roadside Rear Wardrobe
1.	966872-151	Panel, 31.79 x 76.13
2.	966872-152	Door, 10.49 x 25.88
3.	966872-153	Door, 10.41 x 36.31
4.	966872-4	Panel, 34.35 x 15.75
5.	966872-155	Panel, 13.69 x 75.13
6.	966872-156	Panel, 27.38 x 10.5
7.	966872-1513	Panel, 18.5 x 76
8.	966872-1519	Panel, 5 x 13.56
9.	966874-15	Bookshelf assembly
	381228-02	Catch, Grabber door (5lb Pull)
	381607-11	Hinge, Self-close
	382115	Pull, Flat Black
	380046	Flange, Chrome
	380045	Tubing, ¾”, Metallic
	200975-04	Conduit, Flexible Black plastic
	203693	T-molding, .8125, Beige Embossed
	386106-01	Magazine rack, White
	386107	Rod, Magazine rack

2018 INTERNATIONAL
FURNITURE, BEDROOM

Wardrobe, CS Rear, 28’ A2GO, 28', 30’ Signature

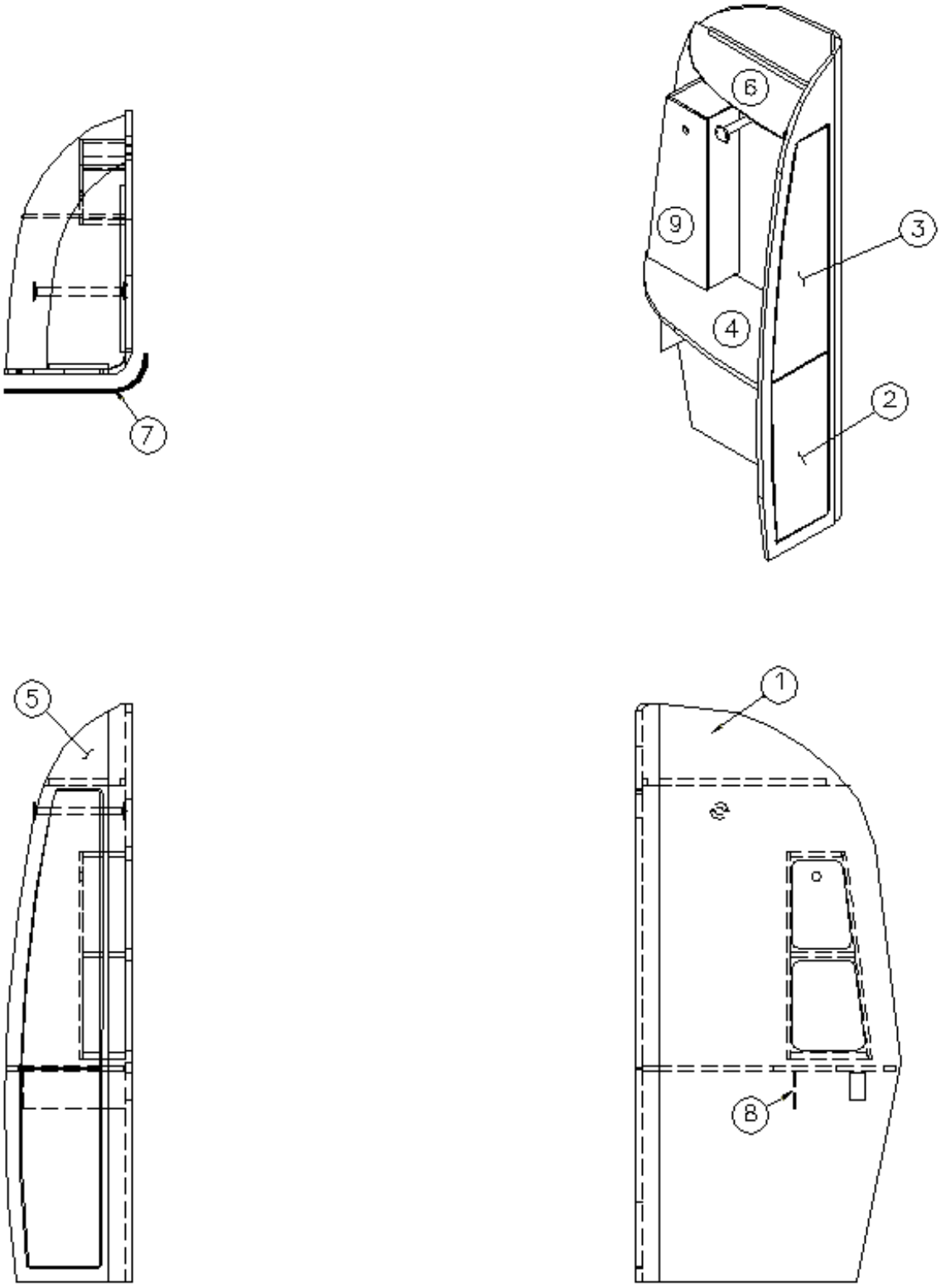

Parts Listed on Next Page

Wardrobe, CS Rear, 28’ A2GO, 28', 30’ Signature

	966871	Curbside Rear Wardrobe, 28’, 30’
	966871-23	Curbside Rear Wardrobe, 28’ A2GO
1.	966871-1	Panel, 31.79 x 76.13
2.	966871-02	Door, 10.49 x 25.88
3.	966871-03	Door, 10.41 x 36.31
4.	966871-4	Panel, 34.35 x 15.75
5.	966871-5	Panel, 13.69 x 75.12
6.	966871-6	Panel, 27.38 x 10.5
7.	966871-13	Panel, 18.5 x 76
8.	966871-19	Panel, 5 x 13.78
9.	966875	Bookshelf assembly
	381228-02	Catch, Grabber door (5lb Pull)
	381607-11	Hinge, Self-close
	382029-00	Handle bar, 7.48”
	380046	Flange, Chrome
	380045	Tubing, ¾”, Metallic
	200975-04	Conduit, Flexible Black plastic
	203440	T-molding, .8125, Black Embossed
	386106-01	Magazine rack, White, 28’ only
	386107	Rod, Magazine rack

2018 INTERNATIONAL
FURNITURE, BEDROOM

Wardrobe, CS Rear, 28', 30’ Serenity

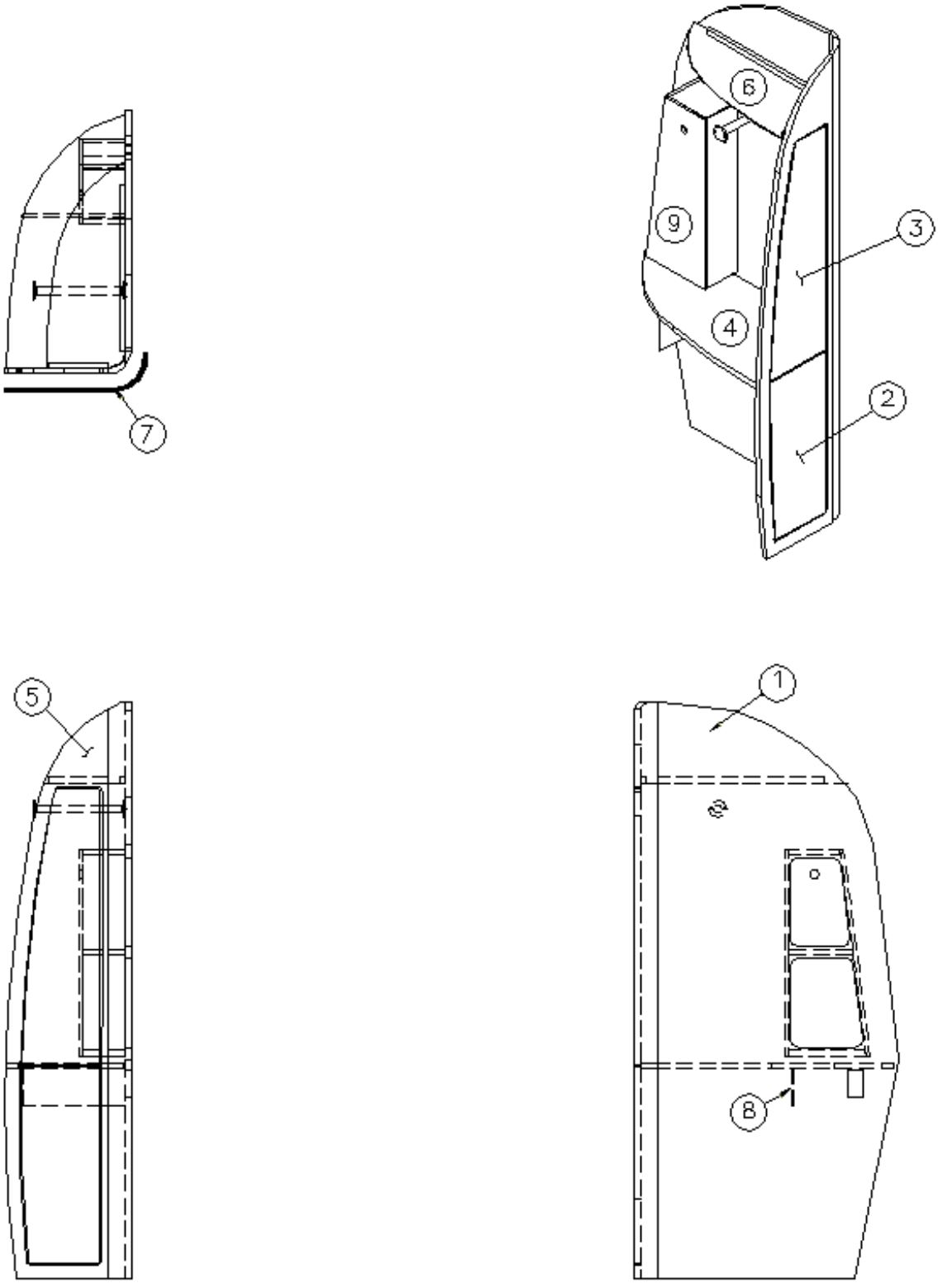

Parts Listed on Next Page

Wardrobe, CS Rear, 28', 30’ Serenity

	966871-15	Curbside Rear Wardrobe
1.	966871-151	Panel, 31.79 x 76.13
2.	966871-152	Door, 10.49 x 25.88
3.	966871-153	Door, 10.41 x 36.31
4.	966871-4	Panel, 34.35 x 15.75
5.	966871-155	Panel, 13.69 x 75.12
6.	966871-156	Panel, 27.38 x 10.5
7.	966871-1513	Panel, 18.5 x 76
8.	966871-1519	Panel, 5 x 13.78
9.	966875-15	Bookshelf assembly
	381228-02	Catch, Grabber door (5lb Pull)
	381607-11	Hinge, Self-close
	382115	Pull, Flat Black
	380046	Flange, Chrome
	380045	Tubing, ¾”, Metallic
	200975-04	Conduit, Flexible Black plastic
	203693	T-molding, .8125, Beige Embossed
	386106-01	Magazine rack, White
	386107	Rod, Magazine rack

2018 INTERNATIONAL
FURNITURE, BEDROOM

Wardrobe, Twin, Hanging, RS 25’ & 28’, CS 25FB & 27FB, Signature

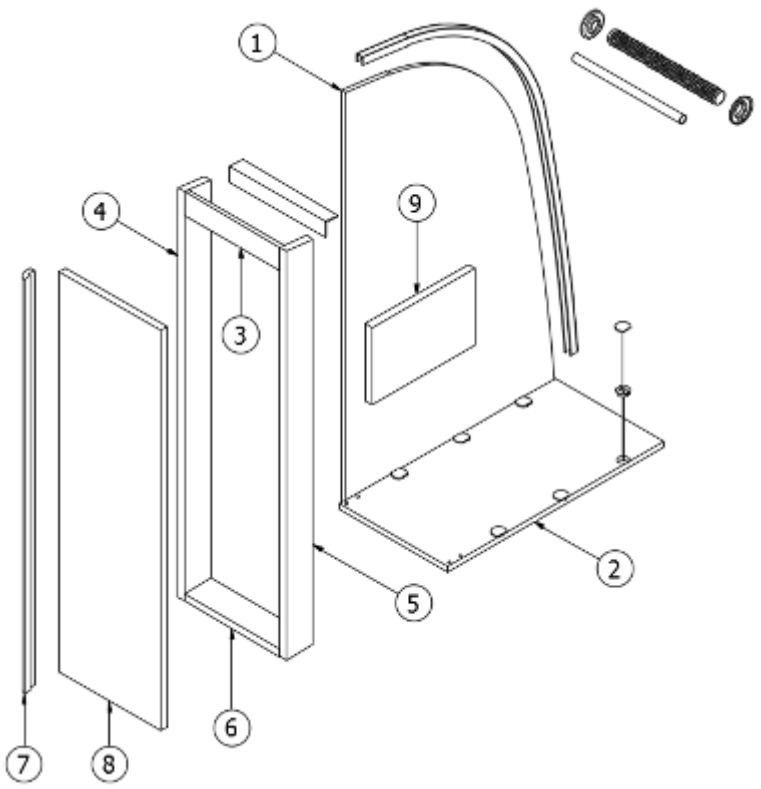

	966852	Hanging Wardrobe
1.	966852-1	Panel, 23.45 x 40
2.	966852-2	Panel, 24.31 x 12.25
3.	966852-3	Panel, 2.25 x 10.75
4.	966852-4	Panel, 3 x 39.75
5.	966852-5	Panel, 3 x 39.75
6.	966852-6	Panel, 3 x 10.75
7.	801706-0024	Corner trim, 90°, 1"radius, Ebony Woods
8.	966852-9	Door, 11.38 x 38.88
9.	966852-24	Panel, 7.5 x 11.5
	380046	Flange, Chrome
	380045	Tubing, .75"
	200975-04	Conduit, Flexible Black plastic
	115085	Aluminum angle
	203138-04	Extrusion, Plastic, .5", Oak
	365364-02	Edgebanding, .94", Ebony Woods
	382029-03	Handle bar, 11.25”
	381607-11	Hinge, Self-close
	382057	Knockdown
	382057-04	Cap, Knockdown, White

2018 INTERNATIONAL
FURNITURE, BEDROOM

Wardrobe, Twin, Hanging, RS 25’ & 28’, CS 25FB & 27FB, Serenity

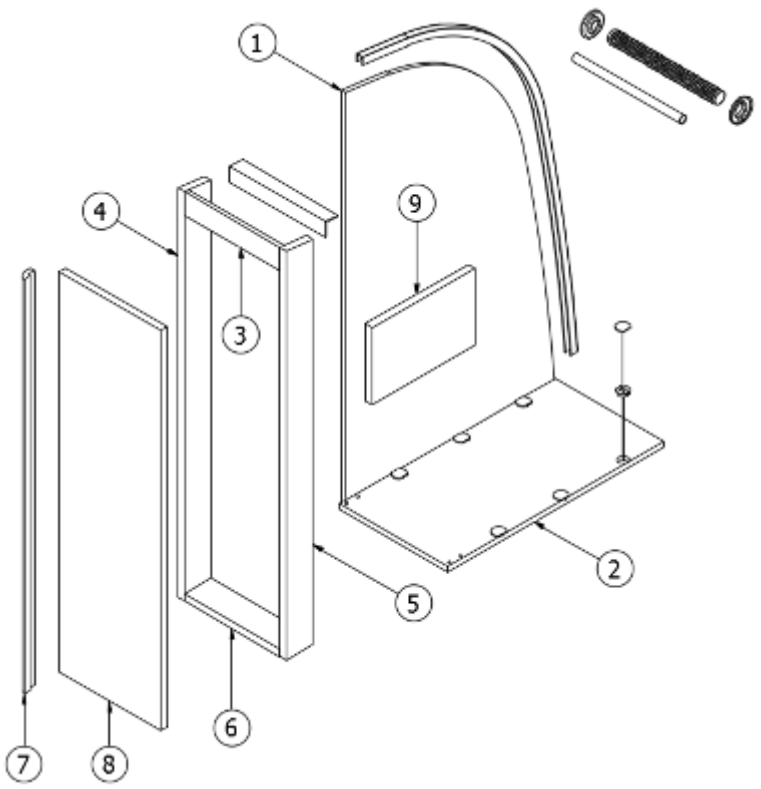

	966852-15	Hanging Wardrobe
1.	966852-151	Panel, 23.45 x 40
2.	966852-152	Panel, 24.31 x 12.25
3.	966852-153	Panel, 2.25 x 10.75
4.	966852-4	Panel, 3 x 39.75
5.	966852-5	Panel, 3 x 39.75
6.	966852-6	Panel, 3 x 10.75
7.	801706-0018	Corner trim, 90°, 1" radius, Asian Sand
8.	966852-159	Door, 11.38 x 38.88
9.	966852-24	Panel, 7.5 x 11.5
	380046	Flange, Chrome
	380045	Tubing, .75"
	200975-04	Conduit, Flexible Black plastic
	115085	Aluminum angle
	203138-03	Extrusion, Plastic, .5”, Beige
	365344-02	Edgebanding, .94", Pearl Bisque
	382115	Pull, Flat Black
	381607-11	Hinge, Self-close
	382057	Knockdown
	382057-04	Cap, Knockdown, White

2018 INTERNATIONAL
FURNITURE, BEDROOM

Wardrobe, Twin, Hanging, RS 27FB, CS 28’ & 30’, Signature

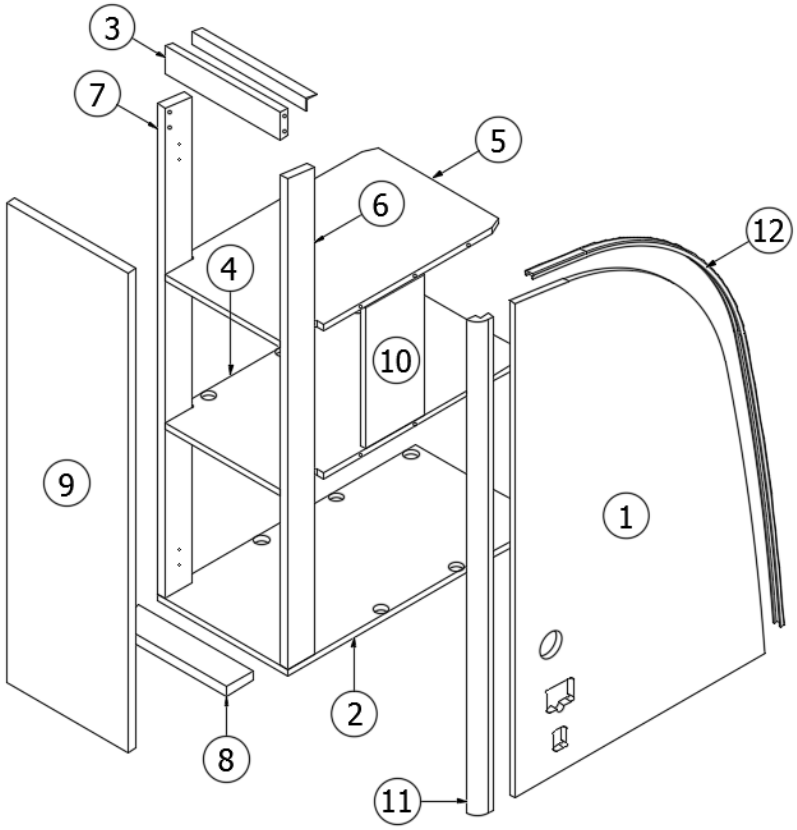

	966855	Hanging Linen Cabinet
1.	966855-23	Panel, 23.45 x 40.04
2.	966855-2	Panel, 24.25 x 12.25
3.	966855-3	Panel, 2.5 x 10.75
4.	966855-4	Panel, 22.5 x 12.25
5.	966855-5	Panel, 20.25 x 12.25
6.	966855-6	Panel, 2.5 x 39.75
7.	966855-7	Panel, 2.5 x 39.75
8.	966855-8	Panel, 2.5 x 10.75
9.	966855-9	Door, 11.38 x 38.88
10.	966855-20	Panel, 5.5 x 11.44
11.	801706-0024	Corner trim, 90°, 1"radius, Ebony Woods
12.	203138-04	Extrusion, Plastic, .5”, Oak
	382057	Knockdown
	382057-04	Cap, Knockdown, White
	382029-03	Handle bar, 11.25”
	381228-02	Catch, Grabber door
	381607-11	Hinge, Self-close
	115085	Angle aluminum

2018 INTERNATIONAL
FURNITURE, BEDROOM

Wardrobe, Twin, Hanging, RS 27FB, CS 28’ & 30’, Serenity

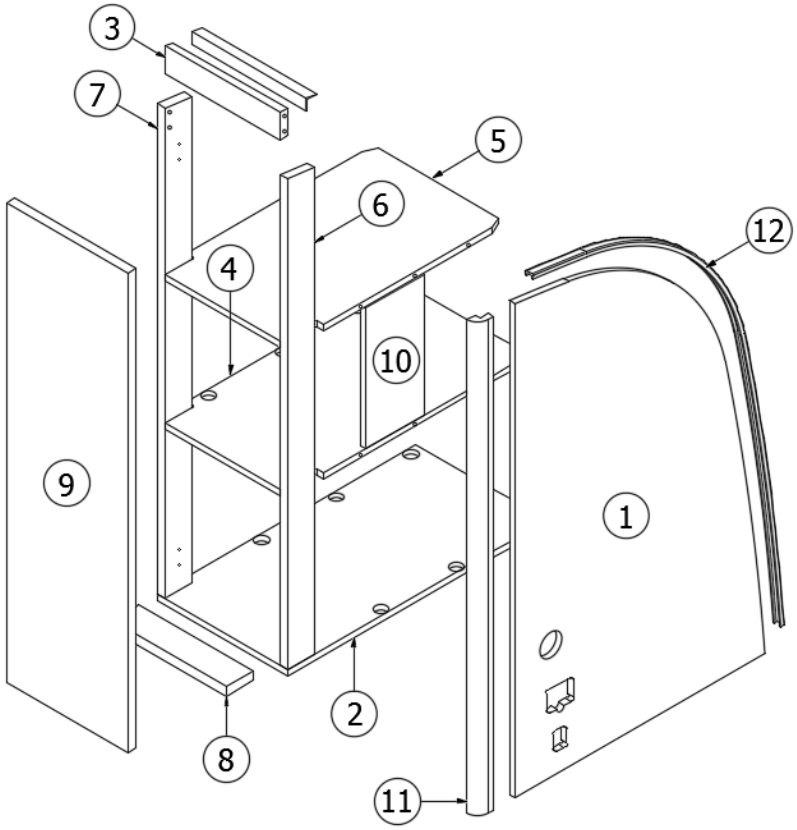

	966855-15	Hanging Linen Cabinet
1.	966855-1523	Panel, 23.45 x 40.04
2.	966855-152	Panel, 24.25 x 12.25
3.	966855-153	Panel, 2.5 x 10.75
4.	966855-4	Panel, 22.5 x 12.25
5.	966855-5	Panel, 20.25 x 12.25
6.	966855-6	Panel, 2.5 x 39.75
7.	966855-7	Panel, 2.5 x 39.75
8.	966855-8	Panel, 2.5 x 10.75
9.	966855-159	Door, 11.38 x 38.88
10.	966855-20	Panel, 5.5 x 11.44
11.	801706-0018	Corner trim, 90°, 1"radius, Asian Sand
12.	203138-03	Extrusion, Plastic, .5”, Beige
	382057	Knockdown
	382057-04	Cap, Knockdown, White
	382115	Pull, Flat Black
	381228-02	Catch, Grabber door
	381607-11	Hinge, Self-close
	115085	Angle aluminum

2018 INTERNATIONAL
FURNITURE, BEDROOM

Wardrobe, Twin, RS Hanging, 30’, Signature

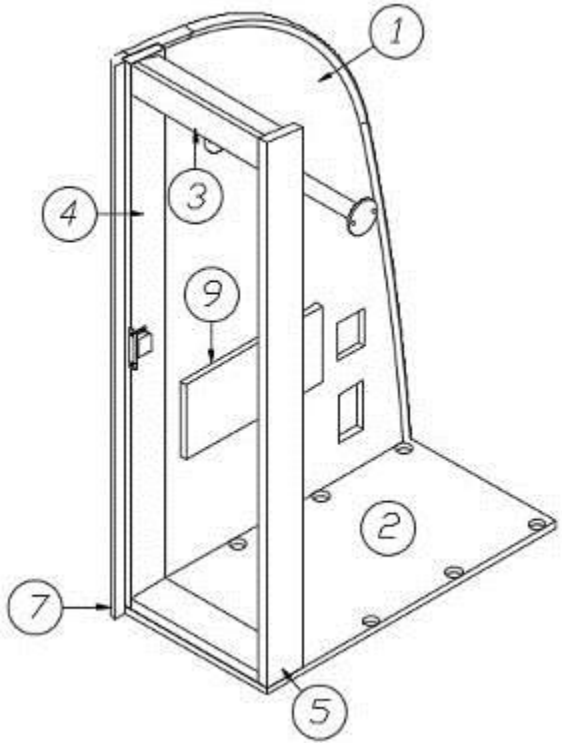

	967863-01	RS Hanging Wardrobe
1.	967863-011	Panel, 23.45 x 40.04
2.	967863-012	Panel, 24.31 x 12.25
3.	967863-013	Panel, 2.25 x 10.75
4.	967863-014	Panel, 3 x 39.75
5.	967863-015	Panel, 3 x 39.75
6.	967863-016	Panel, 3 x 10.75
7.	801706-0024	Corner trim, 90°, 1” radius, Ebony Woods
8.	967863-019	Door, 11.38 x 38.88
9.	967863-22	Panel, 5.50 x 11.44
	382029-03	Handle bar, 11.25”
	381228-02	Catch, Grabber door
	381607-11	Hinge, Self-close
	380046	Flange, Chrome
	380045	Tubing, .75”, Electric Metallic
	200975-04	Conduit, Flexible Black plastic
	365340-02	Edgebanding, .94”, Frosty White
	365364-02	Edgebanding, .94”, Ebony Woods
	203138-04	Extrusion, Plastic, .5”, Oak
	382057	Knockdown
	382057-04	Cap, Knockdown, White

2018 INTERNATIONAL
FURNITURE, BEDROOM

Wardrobe, Twin, RS Hanging, 30’, Serenity

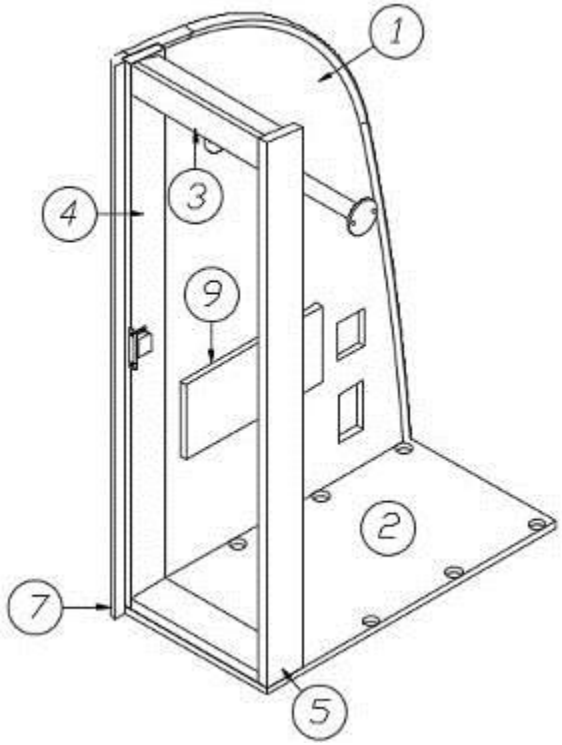

	967863-15	RS Hanging Wardrobe
1.	967863-151	Panel, 23.45 x 40.04
2.	967863-152	Panel, 24.31 x 12.25
3.	967863-153	Panel, 2.25 x 10.75
4.	967863-4	Panel, 3 x 39.75
5.	967863-5	Panel, 3 x 39.75
6.	967863-6	Panel, 3 x 10.75
7.	801706-0018	Corner trim, 90°, 1” radius, Asian Sand
8.	967863-159	Door, 11.38 x 38.88
9.	967863-22	Panel, 5.50 x 11.44
	382115	Pull, Flat Black
	381228-02	Catch, Grabber door
	381607-11	Hinge, Self-close
	380046	Flange, Chrome
	380045	Tubing, .75”, Electric Metallic
	200975-04	Conduit, Flexible Black plastic
	365340-02	Edgebanding, .94”, Frosty White
	365344-02	Edgebanding, .94”, Pearl Bisque
	203138-03	Extrusion, Plastic, .5”, Beige
	382057	Knockdown
	382057-04	Cap, Knockdown, White

Storage Box, Twin, 25’, 28’, Signature

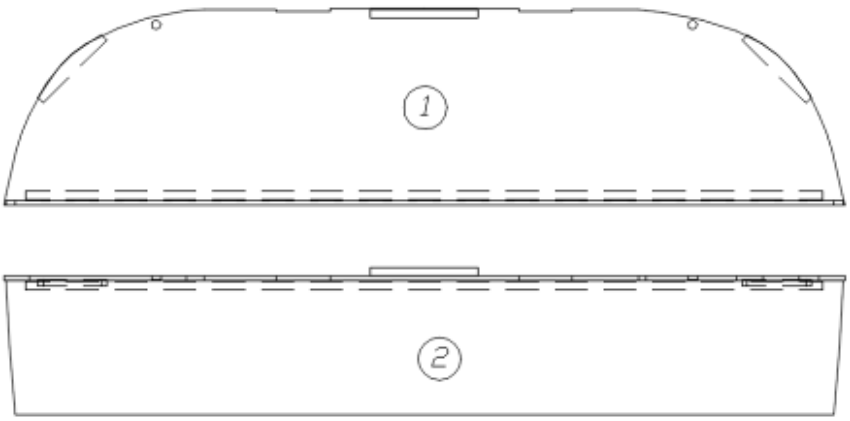

	967769	Storage Box
1.	967769-1	Panel, 21.5 x 93.5
2.	967769-2	Panel, 15 x 93.5
	114812	Aluminum angle
	701538	Carpet, Econolier Velour Black
	382057	Knockdown
	112671-02	Vinyl, Under Bed Storage

Storage Box, Twin, 25’, 28’, Serenity

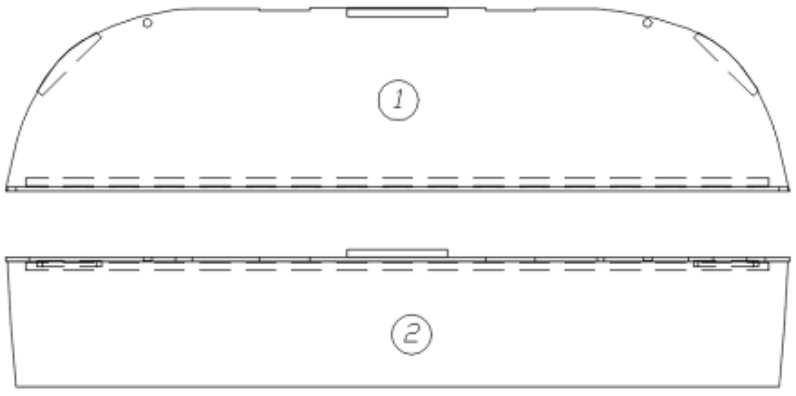

	967769-15	Storage Box
1.	967769-151	Panel, 21.5 x 93.5
2.	967769-152	Panel, 15 x 93.5
	114812	Aluminum angle
	701538	Carpet, Econolier Velour Black
	382057	Knockdown
	112671-02	Vinyl, Under Bed Storage

2018 INTERNATIONAL
FURNITURE, BEDROOM

Storage Box, Twin, 25FB, 27FB, 30', Signature

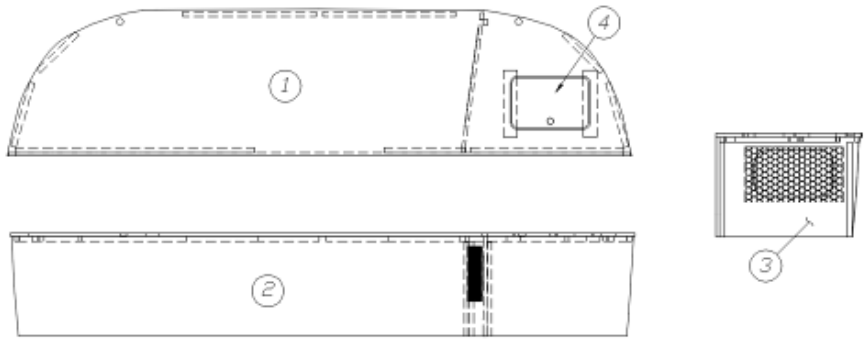

	966858	Storage Box
1.	966858-1	Panel, 21.5 x 93.5
2.	966858-2	Panel, 15 x 93.5
3.	966858-8	Panel, 15 x 21.25
4.	966858-10	Panel, 7.5 x 11.5
	382057	Knockdown
	203664-01	Grill screen, Dinette, 9.25 x 14.88
	701538-01	Carpet, Econolier w/PSA back
	112671-16	Vinyl, Under Bed Storage

Storage Box, Twin, 25FB, 27FB, 30', Serenity

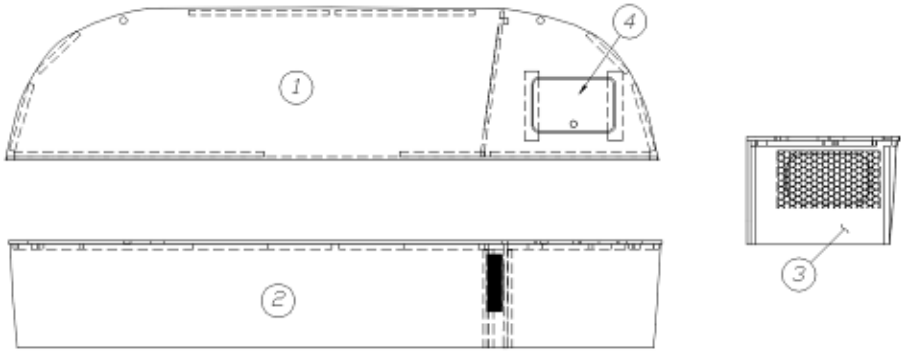

	966858-15	Front Storage Box
1.	966858-151	Panel, 21.5 x 93.5
2.	966858-152	Panel, 15 x 93.5
3.	966858-8	Panel, 15 x 21.25
4.	966858-1510	Panel, 7.5 x 11.5
	382057	Knockdown
	203664-01	Grill screen, Dinette, 9.25 x 14.88
	701538-01	Carpet, Econolier w/PSA back
	112671-16	Vinyl, Under Bed Storage

2018 INTERNATIONAL
FURNITURE, LAVATORY

Bath Module, 23CB Signature

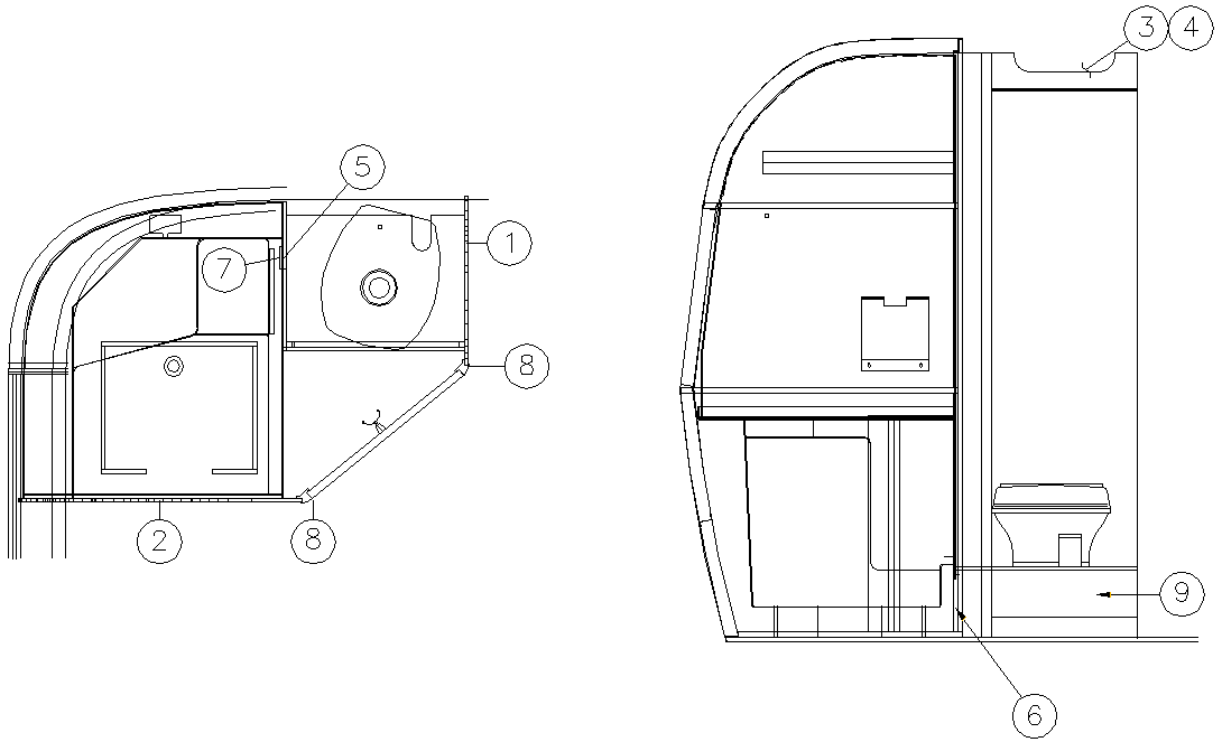

	111557	Shower Module Install
1.	111557-1	Panel, 23 x 77.84
2.	111557-2	Panel, 38.34 x 79.48
3.	111557-3	Panel, 26.13 x 4.75
4.	111557-4	Panel, 26.13 x 4.75
5.	111557-5	Panel, 12 x 66.63
6.	111557-6	Panel, 9.5 x 23
7.	111557-7	Panel, 63 x 3
8.	801394-0016	Corner trim, 45°, 2" radius, Wenge
9.	966941	Toilet stand
	702937-06	Shower door, Rollaway, White
	203114-02	Shower, 2 piece fiberglass, White
	*966940	Bath door w/porthole
	968783	Bath door, Bi-fold
	386106-01	Magazine rack, White
	386107	Rod, Magazine rack
	381778	Rob hook, Chrome
	801956-03	Molding, Quarter round, .75”, Frosty White
	800638-0124	Molding, Quarter round. .5”, Ebony Woods

*Replaced by 968783 in December, 2017

2018 INTERNATIONAL
FURNITURE, LAVATORY

Bath Module, 23CB Serenity

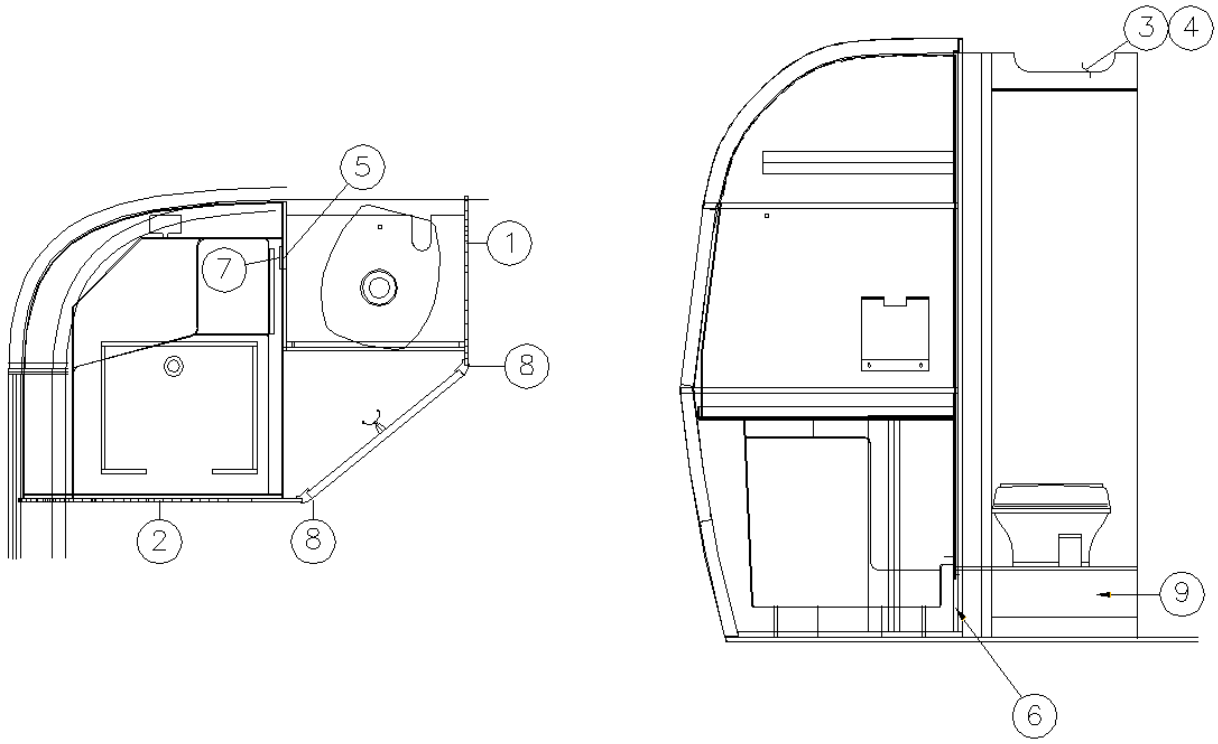

	111557-15	Shower Module Install
1.	111557-151	Panel, 23 x 77.84
2.	111557-152	Panel, 38.34 x 79.48
3.	111557-153	Panel, 26.13 x 4.75
4.	111557-154	Panel, 26.13 x 4.75
5.	111557-5	Panel, 12 x 66.63
6.	111557-6	Panel, 9.5 x 23
7.	111557-7	Panel, 63 x 3
8.	801394-0018	Corner trim, 45°, 2" radius, Asian Sand
9.	966941	Toilet stand
	702937-06	Shower door, Rollaway
	203114-02	Shower, 2 piece fiberglass, White
	967544-15	Bath door w/window
	968783	Bath door, Bi-fold
	386106-01	Magazine rack, White
	386107	Rod, Magazine rack
	381778	Robe hook, Chrome
	801956-03	Molding, Quarter round, .75”, Frosty White
	800638-0118	Molding, Quarter round. .5”, Asian Sand

*Replaced by 968783 in December, 2017

2018 INTERNATIONAL
FURNITURE, LAVATORY

Bath Module, 23FB Signature

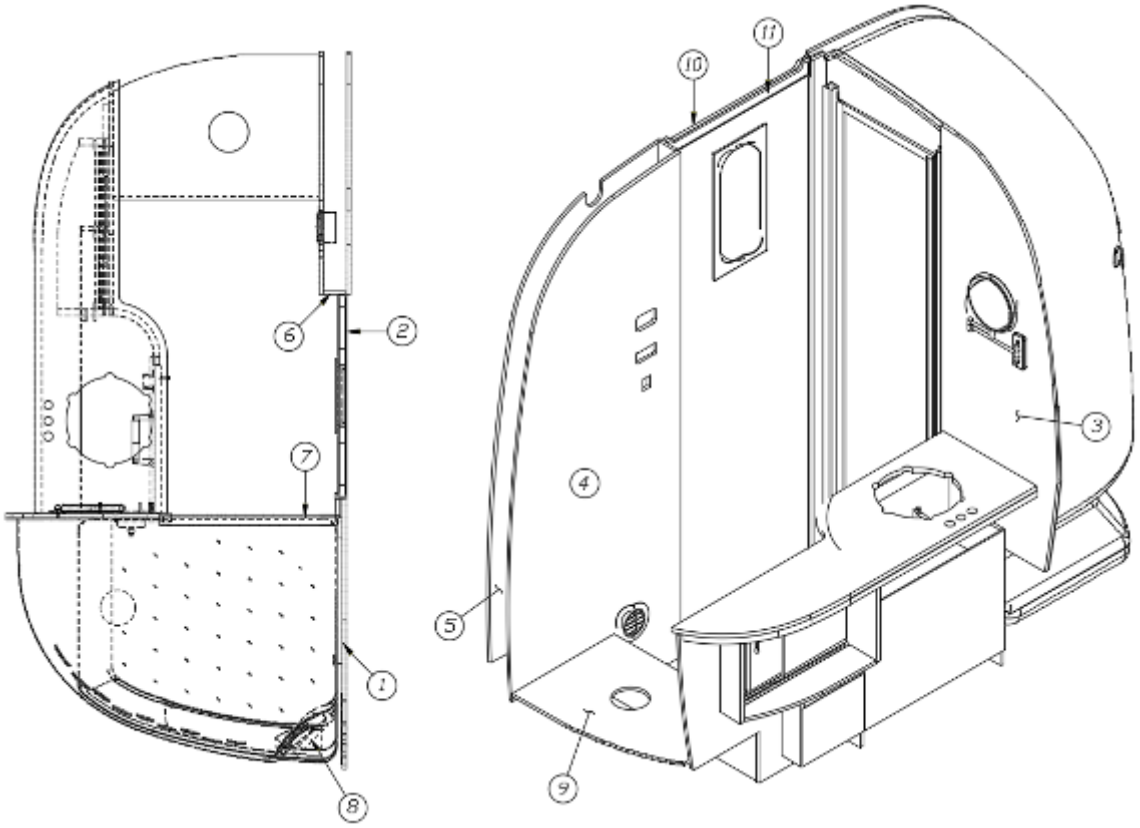

	111730	Shower Module Install
1.	967325	Sub assembly, Forward panel
2.	967637	Bath door w/porthole
3.	111730-3	Panel, 20.92 x 78.08
4.	111730-4	Panel, 30.76 x 78.39
5.	111730-5	Panel, 30.76 x 78.39
6.	111730-6	Panel, 3 x 78.55
7.	111730-7	Panel, 20.5 x 7.25
8.	111730-13	Panel, 5.5 x 5.5
9.	967455	Toilet stand
10.	111730-17	Panel, 26.12 x 2.76
11.	111730-18	Panel, 26.12 x 2.76
	203138-05	Wall extrusion, Black
	602394-03	4” register, Round, Black
	203615	Shower
	203692	Shower base, Fiberglass
	967321	Lavatory assembly
	703911-02	Shower door, Brushed Nickel
	382063	Retractable clothes Line

2018 INTERNATIONAL
FURNITURE, LAVATORY

Bath Module, 23FB Serenity

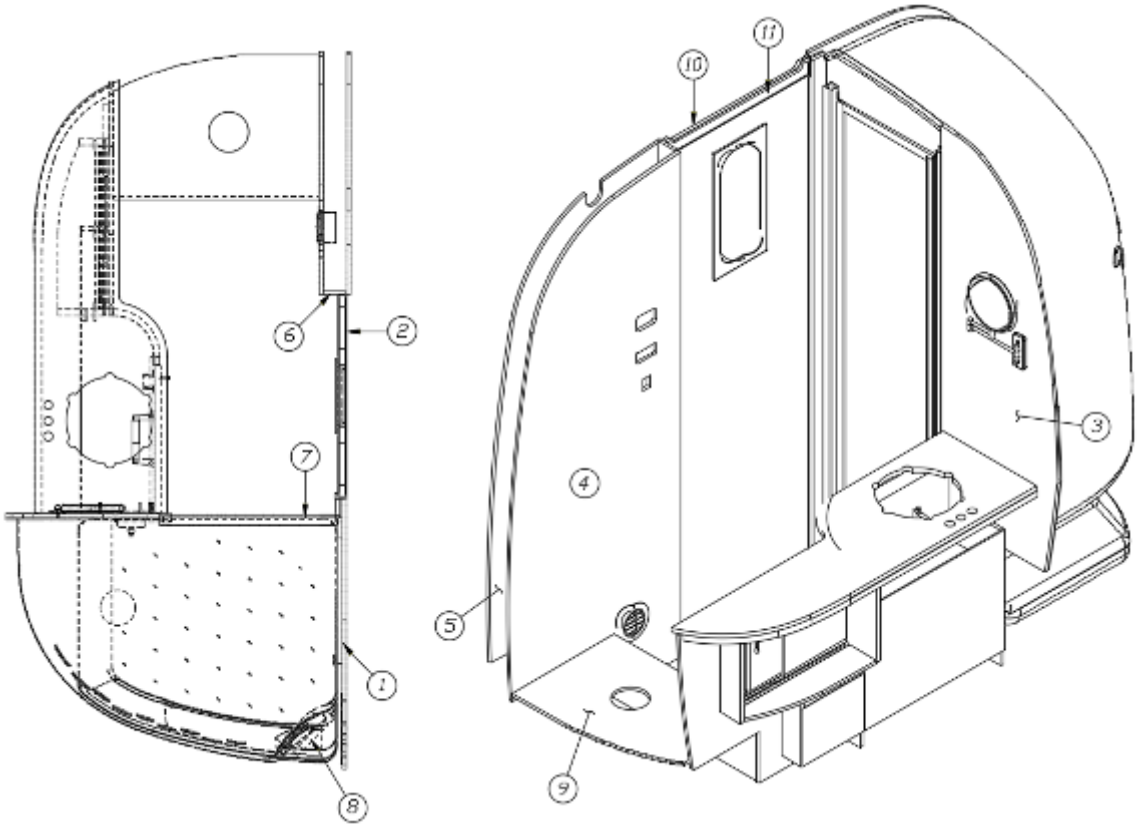

	111730-15	Shower Module Install
1.	967325-15	Sub assembly, Forward panel
2.	967647	Bath door w/window
3.	111730-153	Panel, 20.92 x 788
4.	111730-154	Panel, 30.76 x 78.39
5.	111730-155	Panel, 30.76 x 78.39
6.	111730-156	Panel, 3 x 78.55
7.	111730-157	Panel, 20.5 x 7.25
8.	111730-1513	Panel, 5.5 x 5.5
9.	967455-15	Toilet stand
10.	111730-17	Panel, 26.12 x 2.76
11.	111730-18	Panel, 26.12 x 2.76
	203138-03	Wall extrusion, Beige
	602394-03	4” register, Round, Black
	203615	Shower
	203692	Shower base, Fiberglass
	967321-15	Lavatory assembly
	703911-02	Shower door, Brushed Nickel
	382063	Retractable clothes line

2018 INTERNATIONAL
FURNITURE, LAVATORY

Bath Module, 25’ Signature

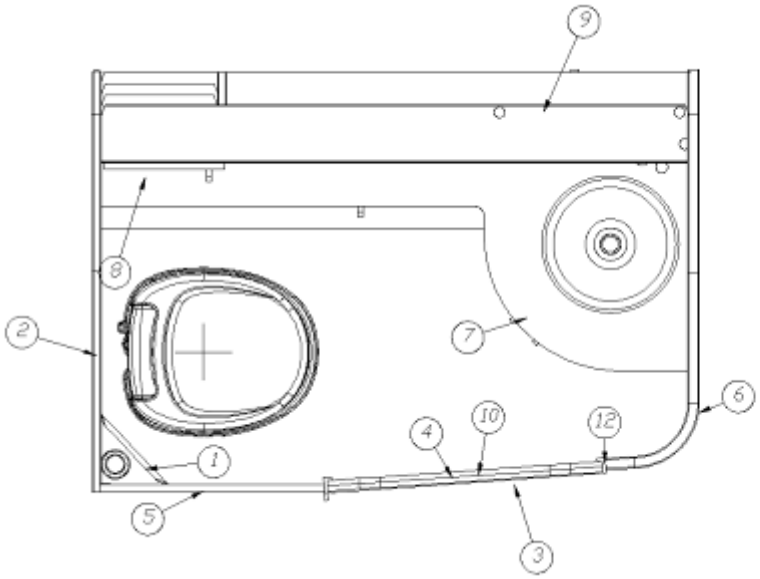

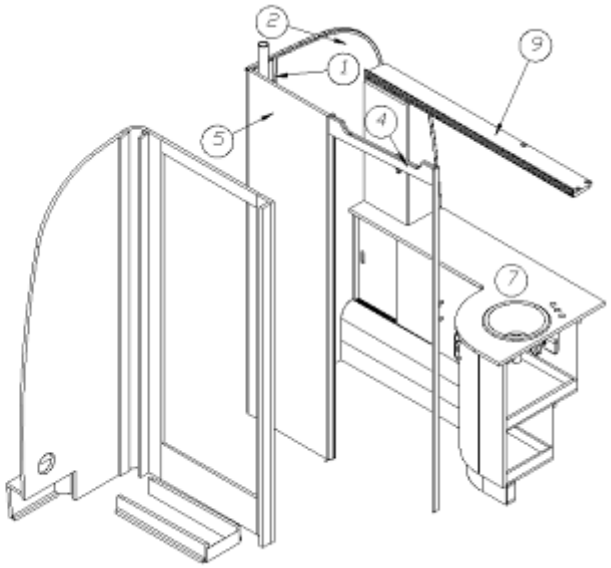

	111950	Bath Module Install
1.	111950-1	Panel, 9.13 x 79.369
2.	111950-2	Panel. 39.58 x 79.32
3.	111950-3	Panel, 4.01 x 26
4.	111950-4	Panel. 4.01 x 26
5.	111950-5	Panel. 21.25 x 79.32
6.	967896	Sub assembly, Radius bath panel
7.	967521	Lavy cabinet
8.	967525	Upper lavy cabinet
9.	967526	Upper lavy shelf
10.	968405-02	Bath door w/porthole
11.	967527	Shower compartment
12.	801665-0024	Molding, Door jamb, Ebony Woods
	703911-01	Shower door, Brushed Nickel

2018 INTERNATIONAL
FURNITURE, LAVATORY

Bath Module, 25’ Serenity

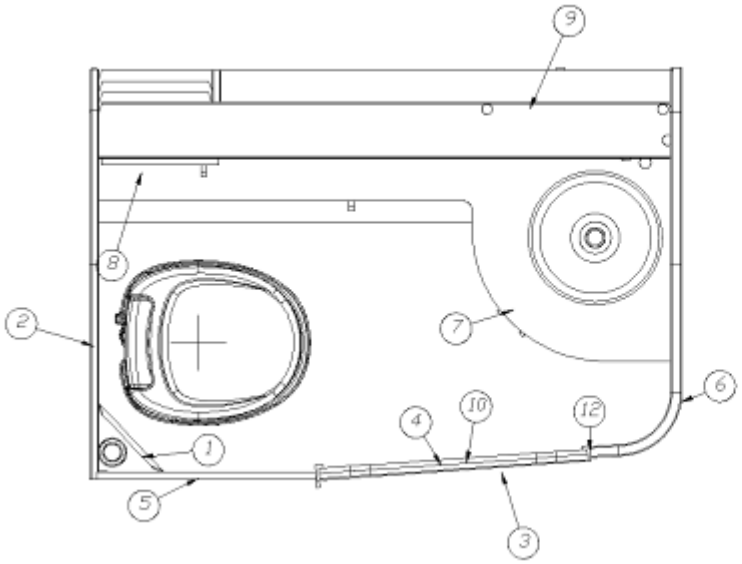

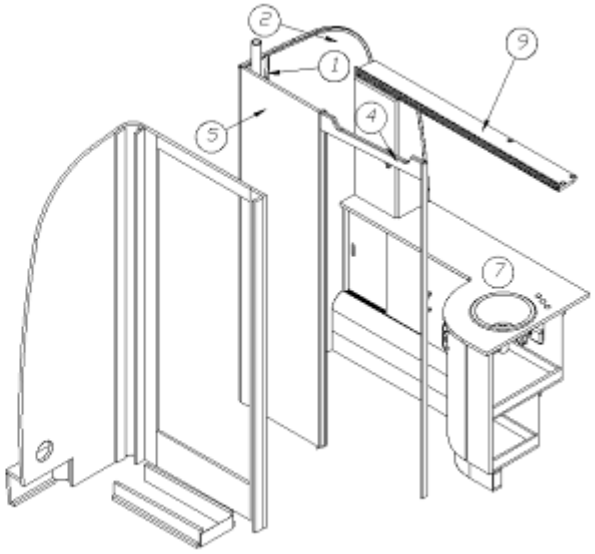

	111950-15	Bath Module Install
1.	111950-151	Panel, 9.13 x 79.369
2.	111950-152	Panel. 39.58 x 79*.32
3.	111950-153	Panel, 4.01 x 26
4.	111950-154	Panel. 4.01 x 26
5.	111950-155	Panel. 21.25 x 79.32
6.	967896-15	Sub assembly, Radius bath panel
7.	967521-15	Lavy cabinet
8.	967525-15	Upper lavy cabinet
9.	967526	Upper lavy shelf
10.	968405-03	Bath door w/window
11.	967527-15	Shower compartment
12.	801665-0018	Molding, Door jamb, Asian Sand
	703911-01	Shower door, Brushed Nickel

Bath Module, 25FB Signature

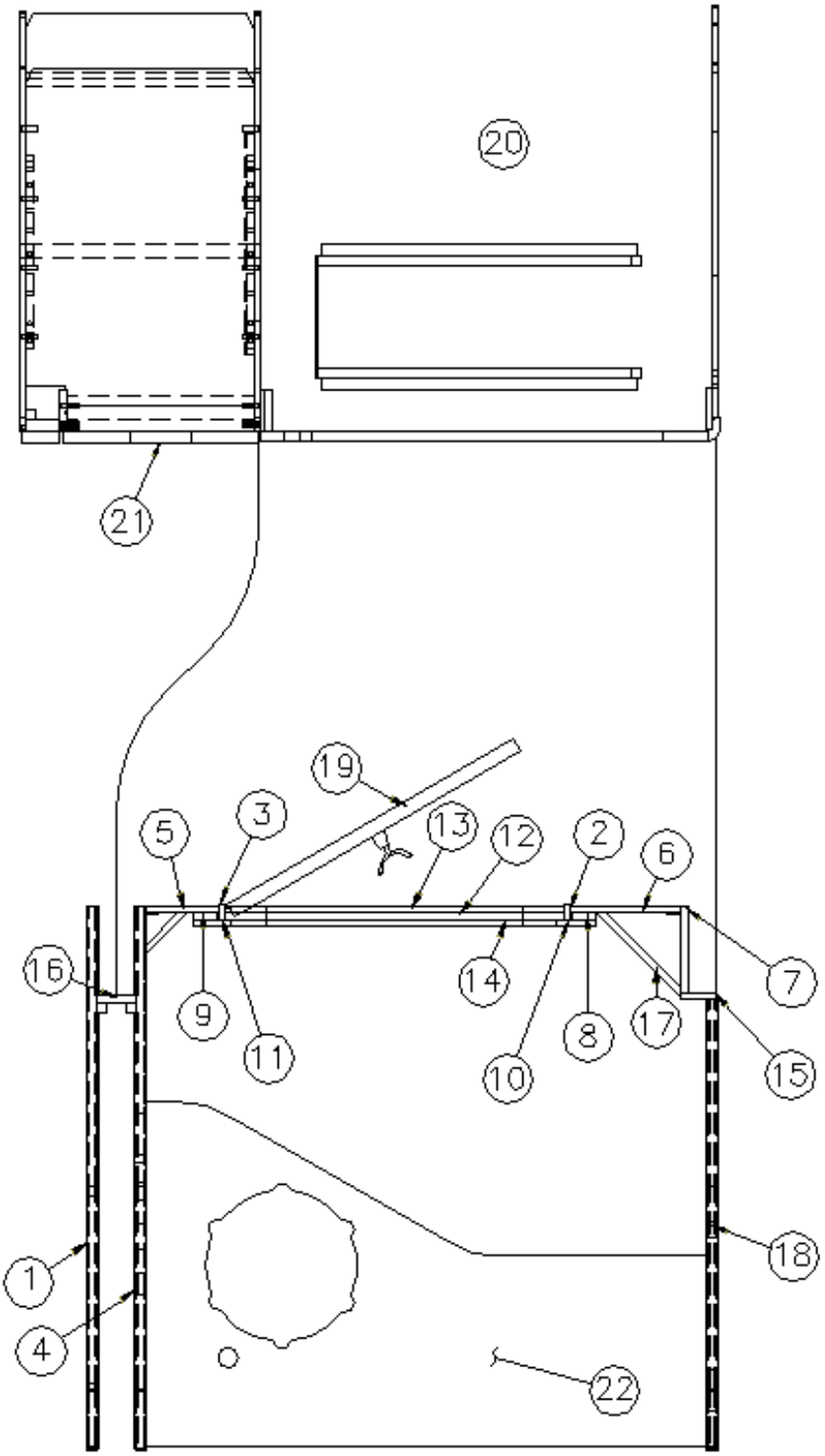

Parts Listed on Next Page

Bath Module, 25FB Signature

	111565	Bath Module Install
1.	111565-1	Panel, 39.5 x 79.24
2.	111565-2	Panel, 1.13 x 79.38
3.	111565-3	Panel, 1.13 x 79.38
4.	111565-4	Panel, 39.35 x 79.24
5.	111565-5	Panel, 5.375 x 79.38
6.	111565-6	Panel, 8 x 79.38
7.	111565-7	Panel, 6.25 x 79.38
8.	111565-8	Panel, 1.69 x 79.36
9.	111565-9	Panel, 1.69 x 79.36
10.	111565-10	Panel, 2.75 x 79.33
11.	111565-11	Panel, 2.75 x 79.33
12.	111565-12	Panel, 24.625 x 3.5
13.	111565-13	Panel, 24.625 x 3.5
14.	111565-14	Panel, 23.625 x 3.75
15.	111565-15I	Panel, 2.5 x 79.02
16.	111565-16	Panel, 3 x 78.98
17.	111565-17	Panel, 8.71 x 79.36
18.	111565-18	Panel, 32.61 x 78.83
19.	966895	Bath door w/porthole
20.	966879	Shower compartment
21.	966905	Wardrobe, Roadside
22.	966902	Lavatory cabinet
	703911-01	Shower door, Brushed Nickel
	704166	Foldette door, Black
	381890-01	Foldette track, Formed
	381890-02	Foldette track, Straight

2018 INTERNATIONAL
FURNITURE, LAVATORY

Bath Module, 25FB Serenity

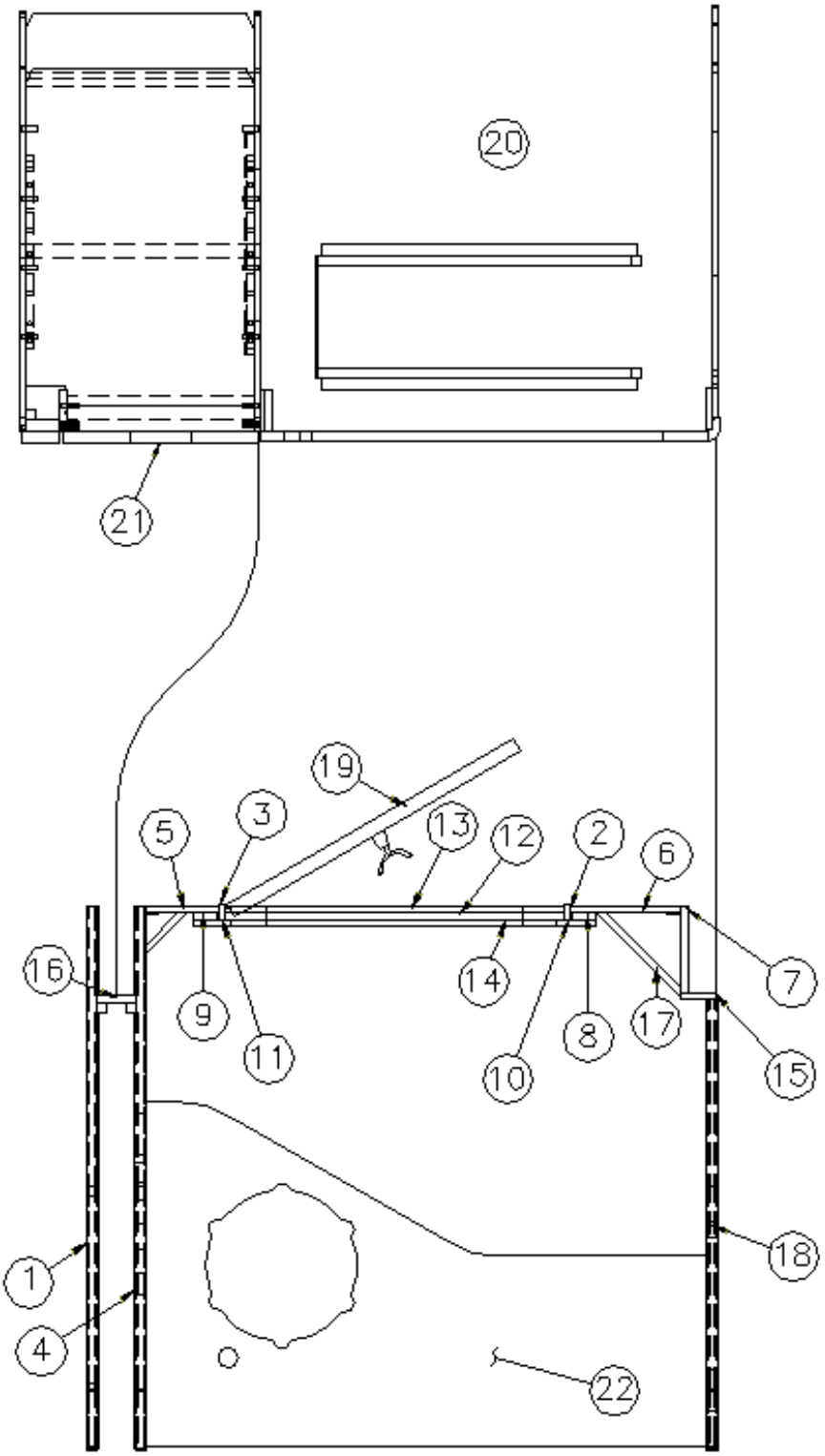

Parts Listed on Next Page

Bath Module, 25FB Serenity

	111565-15	Bath Module Install
1.	111565-151	Panel, 39.5 x 79.25
2.	111565-152	Panel, 1.13 x 79.38
3.	111565-153	Panel, 1.13 x 79.38
4.	111565-154	Panel, 39.35 x 79.24
5.	111565-155	Panel, 5.375 x 79.38
6.	111565-156	Panel, 8 x 79.38
7.	111565-157	Panel, 6.25 x 79.38
8.	111565-158	Panel, 1.69 x 79.36
9.	111565-159	Panel, 1.69 x 79.36
10.	111565-1510	Panel, 2.75 x 79.33
11.	111565-1511	Panel, 2.75 x 79.33
12.	111565-1512	Panel, 24.625 x 3.5
13.	111565-1513	Panel, 24.625 x 3.5
14.	111565-1514	Panel, 23.625 x 3.75
15.	111565-1515	Panel, 2.5 x 79.02
16.	111565-16	Panel, 3 x 78.98
17.	111565-17	Panel, 8.71 x 79.36
18.	111565-1518	Panel, 32.61 x 78.83
19.	967546-15	Bath door w/window
20.	966879-15	Shower compartment
21.	966905-15	Wardrobe, Roadside
22.	966902-15	Lavatory cabinet
	703911-01	Shower door, Brushed Nickel
	704166	Foldette door, Black
	381890-01	Foldette track, Formed
	381890-02	Foldette track, Straight

2018 INTERNATIONAL
FURNITURE, LAVATORY

Bath Module, 27FB Signature

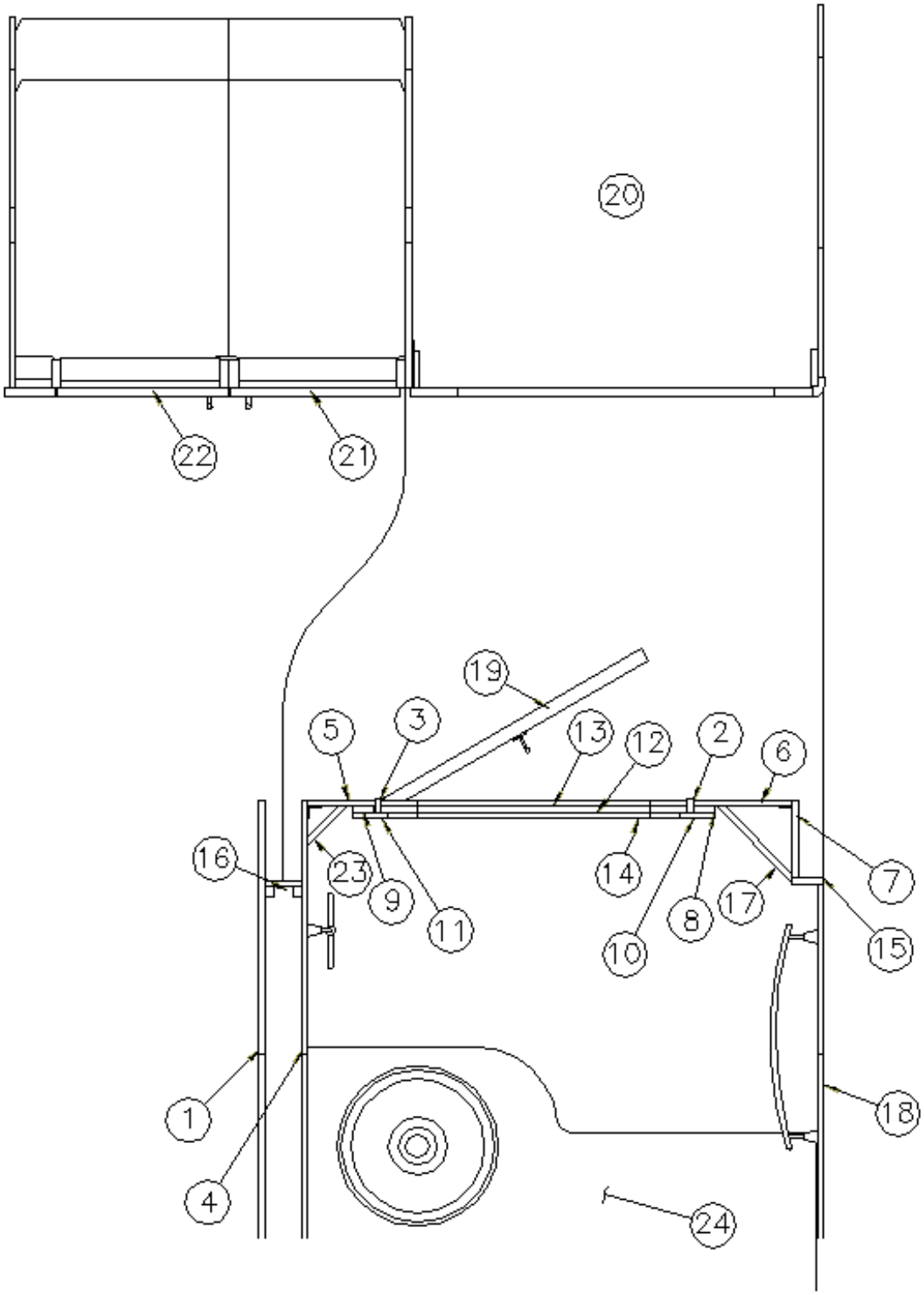

Parts Listed on Next Page

Bath Module, 27FB Signature

	111533	Bath Module Install
1.	111533-1	Panel, 79.25 x 39.5
2.	111533-2	Panel, 1.13 x 79.38
3.	111533-3	Panel, 1.13 x 79.38
4.	111533-4	Panel, 79.25 x 39.5
5.	111533-5	Panel, 5.375 x 79.38
6.	111533-6	Panel, 8 x 79.38
7.	111533-7	Panel, 6.25 x 79.38
8.	111533-8	Panel, 1.69 x 79.36
9.	111533-9	Panel, 1.69 x 79.36
10.	111533-10	Panel, 2.75 x 79.33
11.	111533-11	Panel, 2.75 x 79.33
12.	111533-12	Panel, 24.625 x 3.5
13.	111533-13	Panel, 24.625 x 3.5
14.	111533-14	Panel, 23.625 x 3.75
15.	111533-15I	Panel, 2.5 x 79.02
16.	111533-16	Panel, 3 x 78.94
17.	111533-17	Panel, 8.71 x 79.36
18.	111533-18	Panel, 78.85 x 32.76
19.	966895	Bath door w/porthole
20.	966879	Shower compartment
21.	966880	Wardrobe, Forward
22.	966881	Wardrobe, Aft
23.	111533-32	Panel, 4.5 x 79.36
24.	966884	Lavatory cabinet
	703911-01	Shower door, Brushed Nickel
	203138-05	Extrusion, Plastic, ½”, Black
	704166	Foldette door, Black
	381890-01	Foldette track, Formed
	381890-02	Foldette track, Straight
	114812	Aluminum angle, 1 x 1

2018 INTERNATIONAL
FURNITURE, LAVATORY

Bath Module, 27FB Serenity

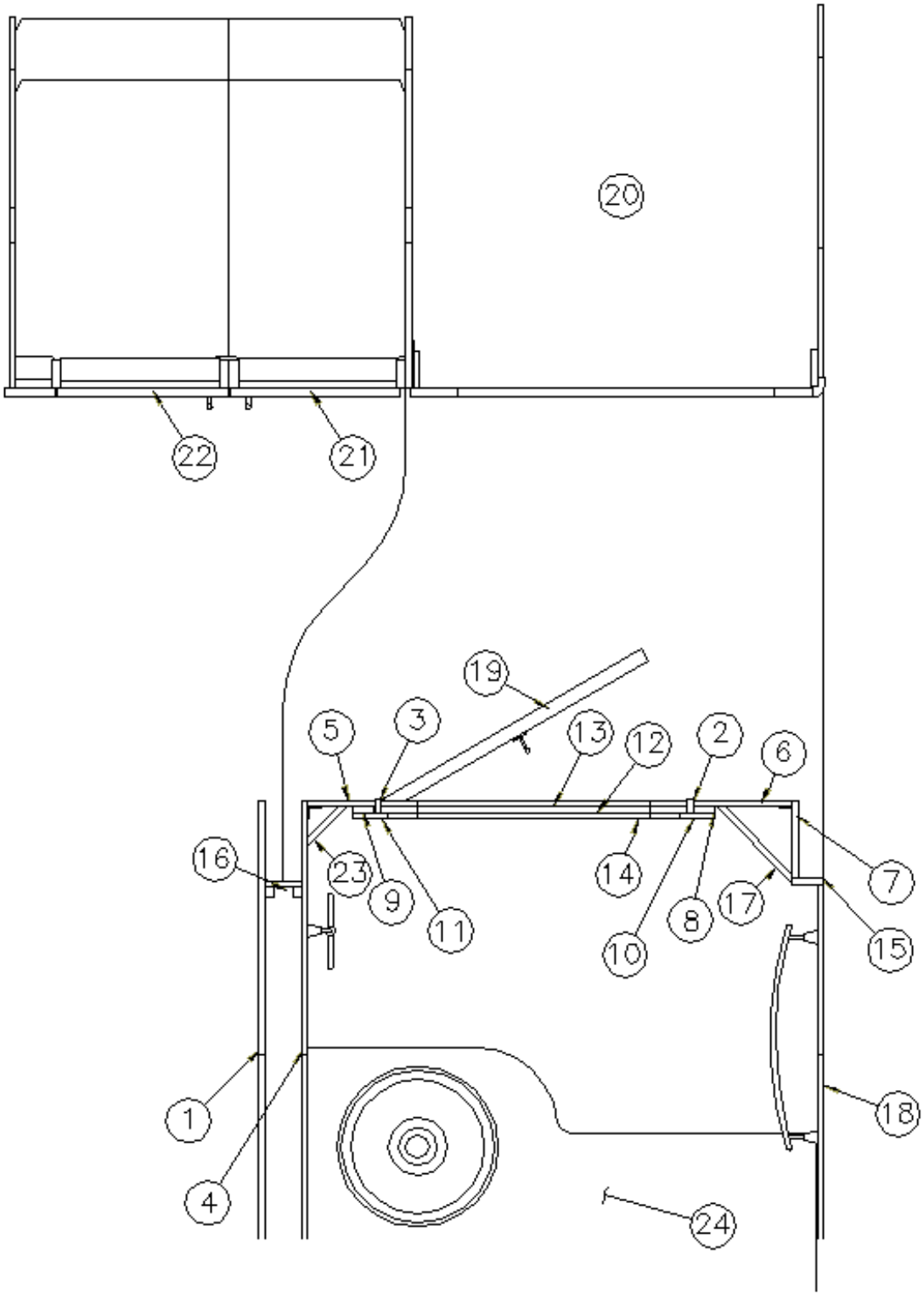

Parts Listed on Next Page

Bath Module, 27FB Serenity

	111533-15	Bath Module Install
1.	111533-151	Panel, 79.25 x 39.5
2.	111533-152	Panel, 1.13 x 79.38
3.	111533-153	Panel, 1.13 x 79.38
4.	111533-154	Panel, 79.25 x 39.5
5.	111533-155	Panel, 5.375 x 79.38
6.	111533-156	Panel, 8 x 79.38
7.	111533-157	Panel, 6.25 x 79.38
8.	111533-158	Panel, 1.69 x 79.36
9.	111533-159	Panel, 1.69 x 79.36
10.	111533-1510	Panel, 2.75 x 79.33
11.	111533-1511	Panel, 2.75 x 79.33
12.	111533-1512	Panel, 24.625 x 3.5
13.	111533-1513	Panel, 24.625 x 3.5
14.	111533-1514	Panel, 23.625 x 3.75
15.	111533-1515	Panel, 2.5 x 79.02
16.	111533-1516	Panel, 3 x 78.94
17.	111533-1517	Panel, 8.71 x 79.36
18.	111533-1518	Panel, 78.86 x 32.76
19.	967546-15	Bath door w/window
20.	966879-15	Shower compartment
21.	966880-15	Wardrobe, Forward
22.	966881-15	Wardrobe, Aft
23.	111533-1532	Panel, 4.5 x 79.36
24.	966884-15	Lavatory cabinet
	703911-01	Shower door, Brushed Nickel
	203138-03	Extrusion, Plastic, ½”, Beige
	704166	Foldette door, Black
	381890-01	Foldette track, Formed
	381890-02	Foldette track, Straight
	114812	Aluminum angle, 1 x 1

2018 INTERNATIONAL
FURNITURE, LAVATORY

Bath Module, 28’ Signature

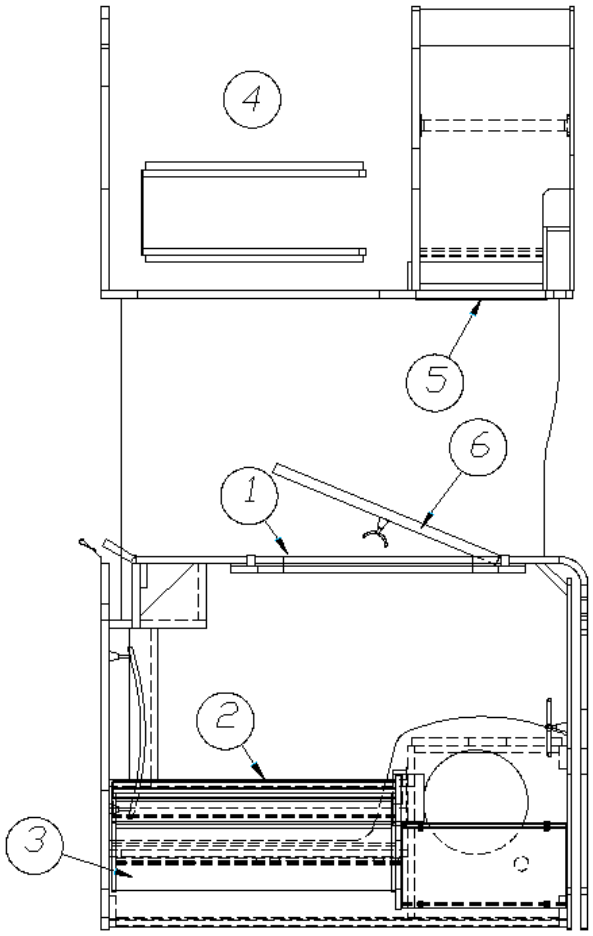

	111582	Bath Module Install
1.	966990	Latrine, Front wall
2.	967394	Lavatory cabinet
3.	967003	Medicine cabinet, Upper
4.	966967	Shower compartment
5.	966969	Wardrobe, Roadside
6.	966995	Bath door w/porthole
	703911-01	Shower door, Brushed Nickel
	690621	Toilet, Dometic, White
	382550	Towel bar
	382551	Towel ring
	381778	Robe hook, Chrome
	372203-26	Mirror, 17 x 25.25
	381220-01	Mirror clip
	381220-02	Mirror clip

Bath Module, 28’ Serenity

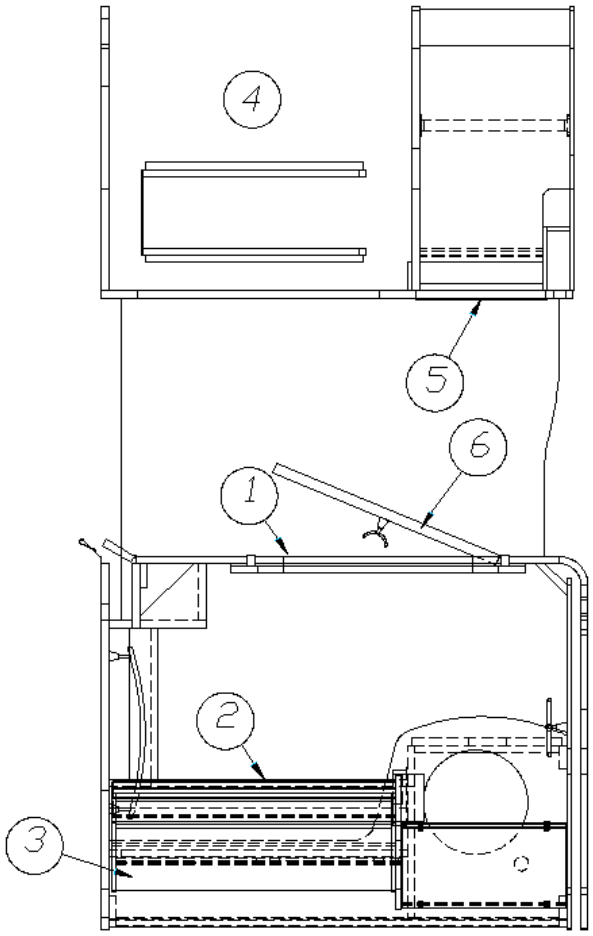

	111582-15	Bath Module Install
1.	966990-15	Latrine, Front wall
2.	967394-15	Lavy cabinet
3.	967003	Medicine cabinet, Upper
4.	966967-15	Shower compartment
5.	966969-15	Wardrobe, Roadside
6.	967545-15	Bath door w/window
	703911-01	Shower door, Brushed Nickel
	690621	Toilet, Dometic, White
	382550	Towel bar
	382551	Towel ring
	381778	Robe hook, Chrome
	372203-26	Mirror, 13.62 x 58
	381220-01	Mirror clip
	381220-02	Mirror clip

2018 INTERNATIONAL
FURNITURE, LAVATORY

Bath Module, 30’ Signature

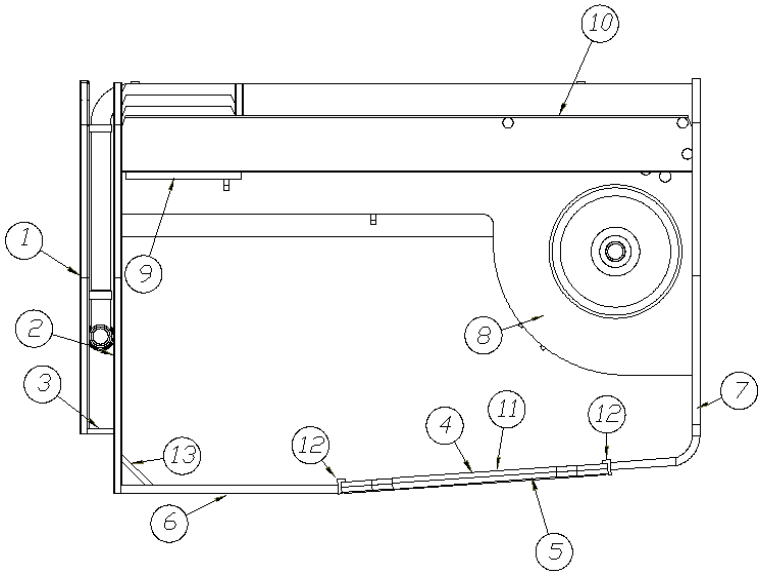

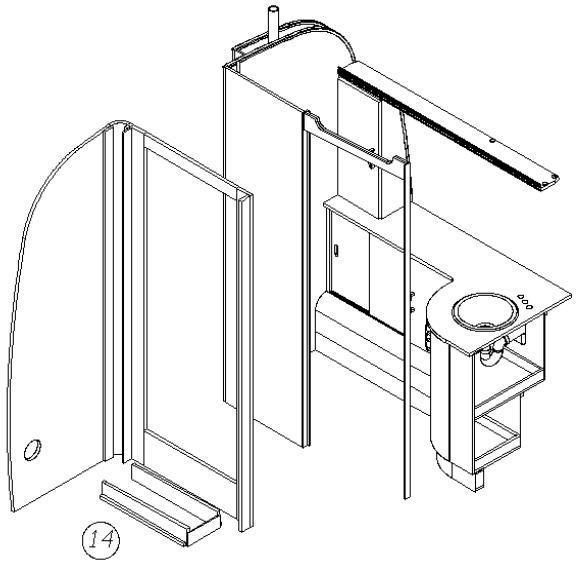

	111838	Bath Module Install
1.	111838-1	Panel, 34.06 x 78.99
2.	111838-2	Panel, 39.58 x 79.32
3.	111838-3	Panel, 2.75 x 78.99
4.	111838-4	Panel, 4.01 x 26
5.	111838-5	Panel, 4.01 x 26
6.	111838-6	Panel, 21.15 x 79.32
7.	967524	Sub assembly, Radius bath panel
8.	967521	Lavy cabinet
9.	967525	Lavy cabinet, Upper
10.	967526	Shelf, Upper lavy
11.	968405-02	Bath door w/porthole
12.	801665-0024	Molding, Door jamb, Ebony Woods
13.	111838-17	Panel, Bath 4.5 x 79.36
14.	967527	Shower compartment
	703911-01	Shower door, Brushed Nickel
	203138-05	Extrusion, Plastic, .5", Black
	365364-01	Edgebanding, .63", Ebony Woods
	114812	Aluminum angle, 1 x 1

2018 INTERNATIONAL
FURNITURE, LAVATORY

Bath Module, 30’ Serenity

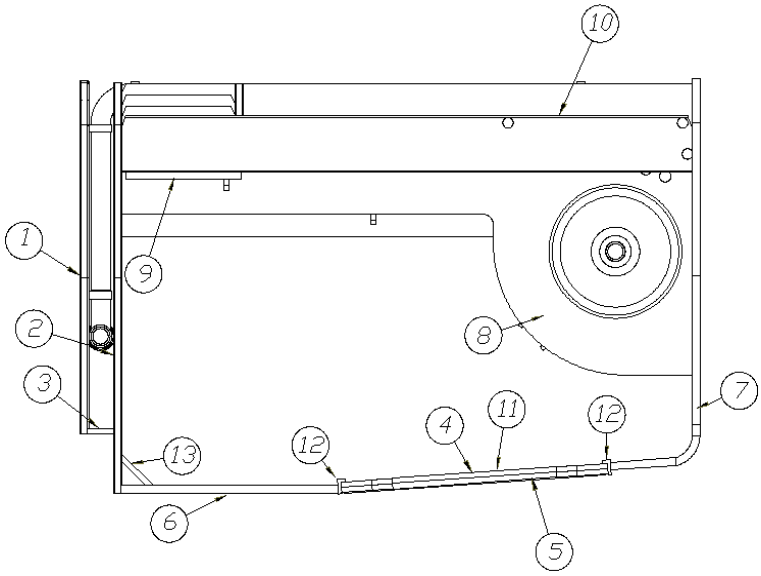

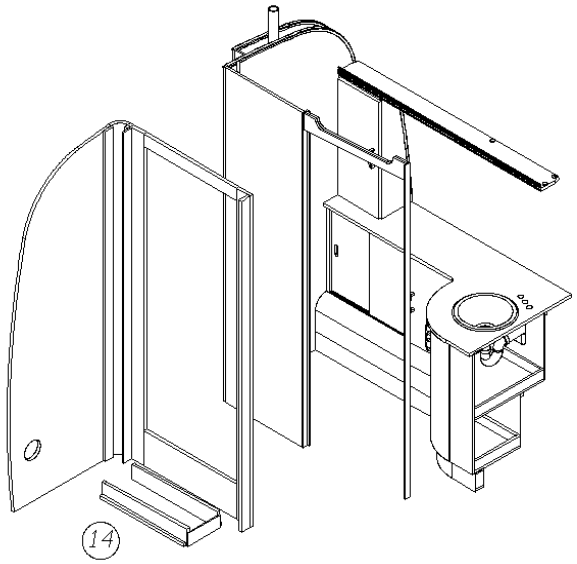

	111838-15	Bath Module Install
1.	111838-151	Panel, 34.06 x 79
2.	111838-152	Panel, 39.58 x 79.32
3.	111838-153	Panel, 2.75 x 79
4.	111838-154	Panel, 4.01 x 26
5.	111838-155	Panel, 4.01 x 26
6.	111838-156	Panel, 21.15 x 79.32
7.	967524-15	Sub assembly, Radius bath panel
8.	967521-15	Lavy cabinet
9.	967525-15	Lavy cabinet, Upper
10.	967526	Shelf, Upper lavy
11.	968405-03	Bath door w/window
12.	801665-0018	Molding, Door jamb, Asian Sand
13.	111838-1517	Panel, 4.5 x 79.36
14.	967527-15	Shower compartment
	703911-01	Shower door, Brushed Nickel
	203138-03	Extrusion, Plastic, .5", Beige
	365344-01	Edgebanding, .63", Pearl Bisque
	114812	Aluminum angle, 1 x 1

2018 INTERNATIONAL
FURNITURE, LAVATORY

Shower Compartment, 25’, 30’ Signature

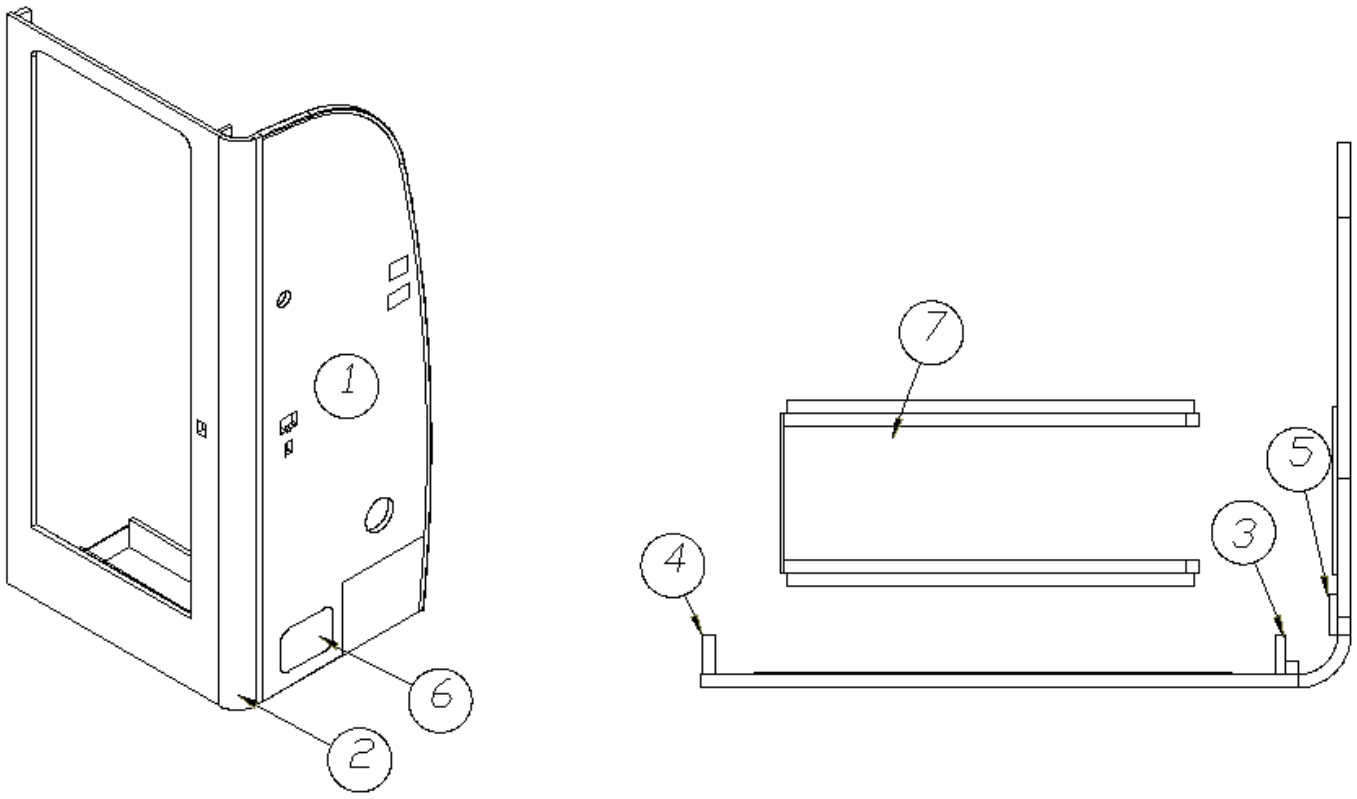

	967527	Shower Compartment
1.	967527-1	Panel, 26.84 x 78.27
2.	967528	Sub assembly, Shower compartment
3.	967527-3	Panel, 2.25 x 53.91
4.	967527-4	Panel, 2.25 x 53.91
5.	967527-5	Panel, 2.25 x 77.5
6.	967527-6	Panel, 8.44 x 5.94
7.	961916	Shower stand
	203081-01	Shower stall, 2 piece fiberglass
	703911-01	Shower door, Brushed Nickel

2018 INTERNATIONAL
FURNITURE, LAVATORY

Shower Compartment, 25’, 30’ Serenity

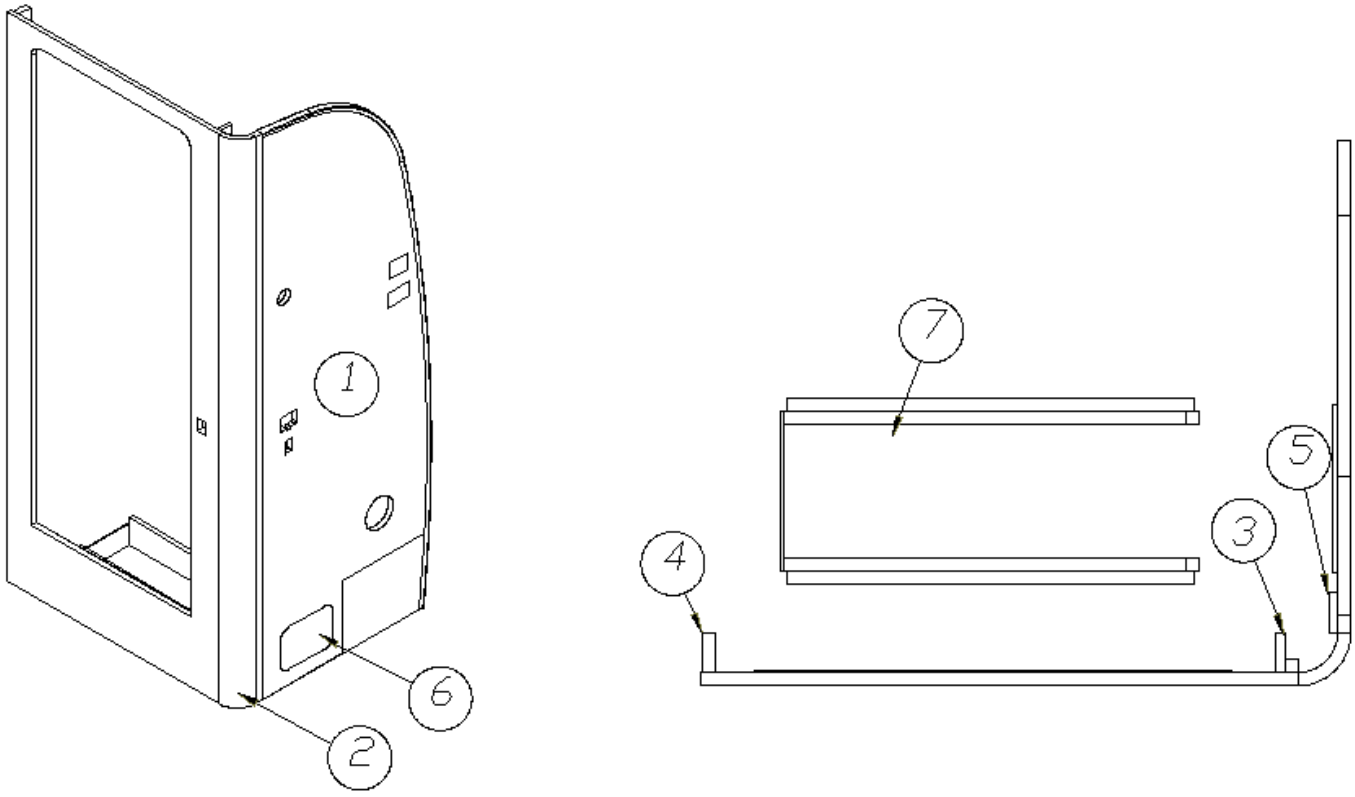

	967527-15	Shower Compartment
1.	967527-151	Panel, 26.84 x 78.27
2.	967528-15	Sub assembly, Shower compartment
3.	967527-3	Panel, 2.25 x 53.91
4.	967527-4	Panel, 2.25 x 53.91
5.	967527-5	Panel, 2.25 x 77.5
6.	967527-156	Panel, 8.44 x 5.94
7.	961916	Shower stand
	203081-01	Shower stall, 2 piece fiberglass
	703911-01	Shower door, Brushed Nickel

2018 INTERNATIONAL
FURNITURE, LAVATORY

Shower Compartment, 25FB, 27FB Signature

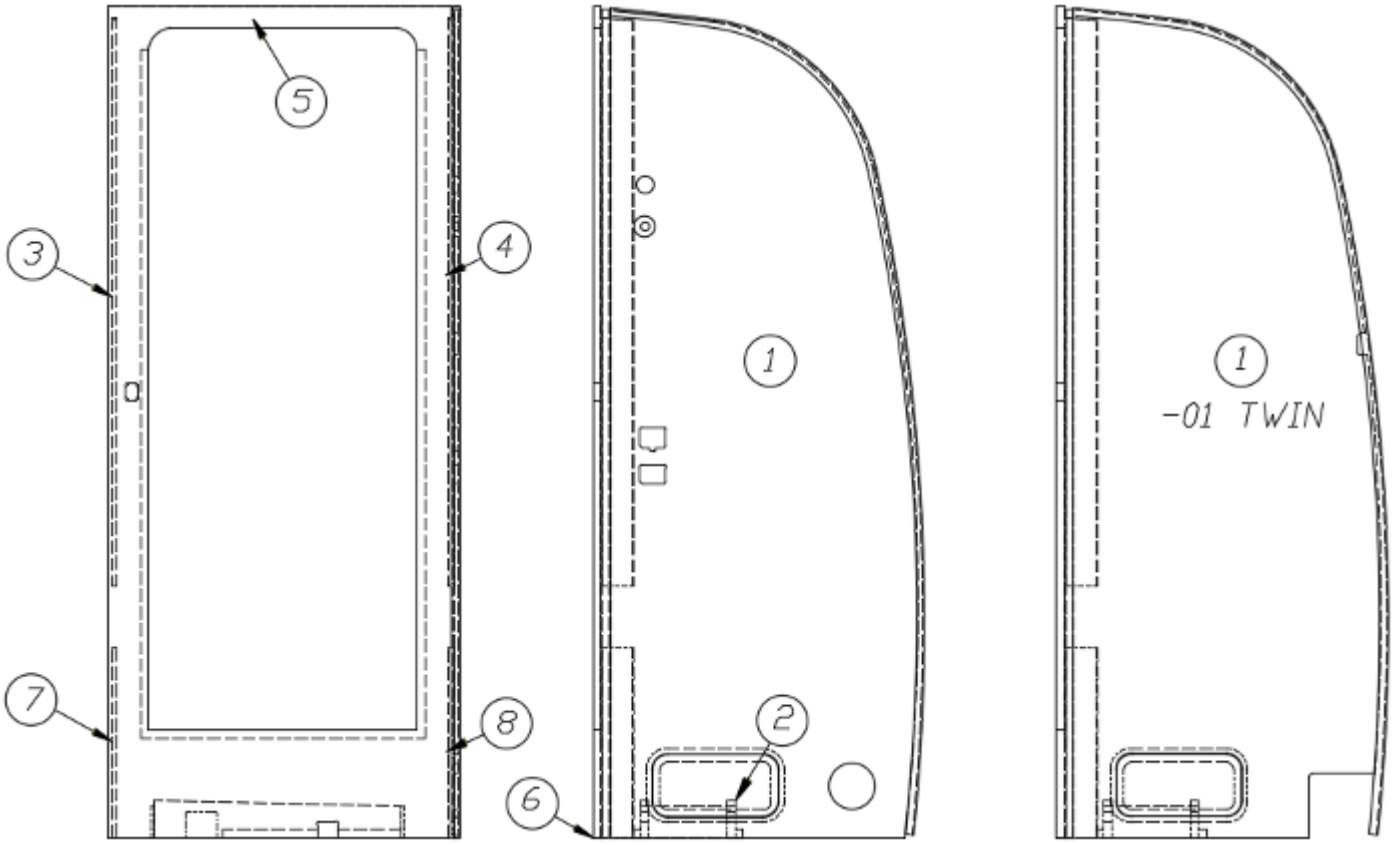

	966879	Shower Compartment
	966879-01	Shower Compartment , 27FB Twin
1.	966879-1	Panel, 29.25 x 78.52
	966879-18	Panel, 29.25 x 78.52, 27FB twins
2.	961916	Shower stand
3.	966879-3	Panel, 3 x 53.79
4.	966879-4	Panel, 3 x 53.79
5.	966879-5	Panel, 32.5 x 78.81
6.	801706-0024	Corner trim, 90°, 1" radius, Ebony
7.	966879-14	Panel, 3 x 18
8.	966879-15I	Panel, 3 x 18
	203081-02	Shower stall, 2 piece fiberglass, White
	703911-01	Shower door, Brushed Nickel
	203138-05	Extrusion, Plastic, .5", Black
	203445	T-molding, Black flexible Poly

2018 INTERNATIONAL
FURNITURE, LAVATORY

Shower Compartment, 25FB, 27FB Serenity

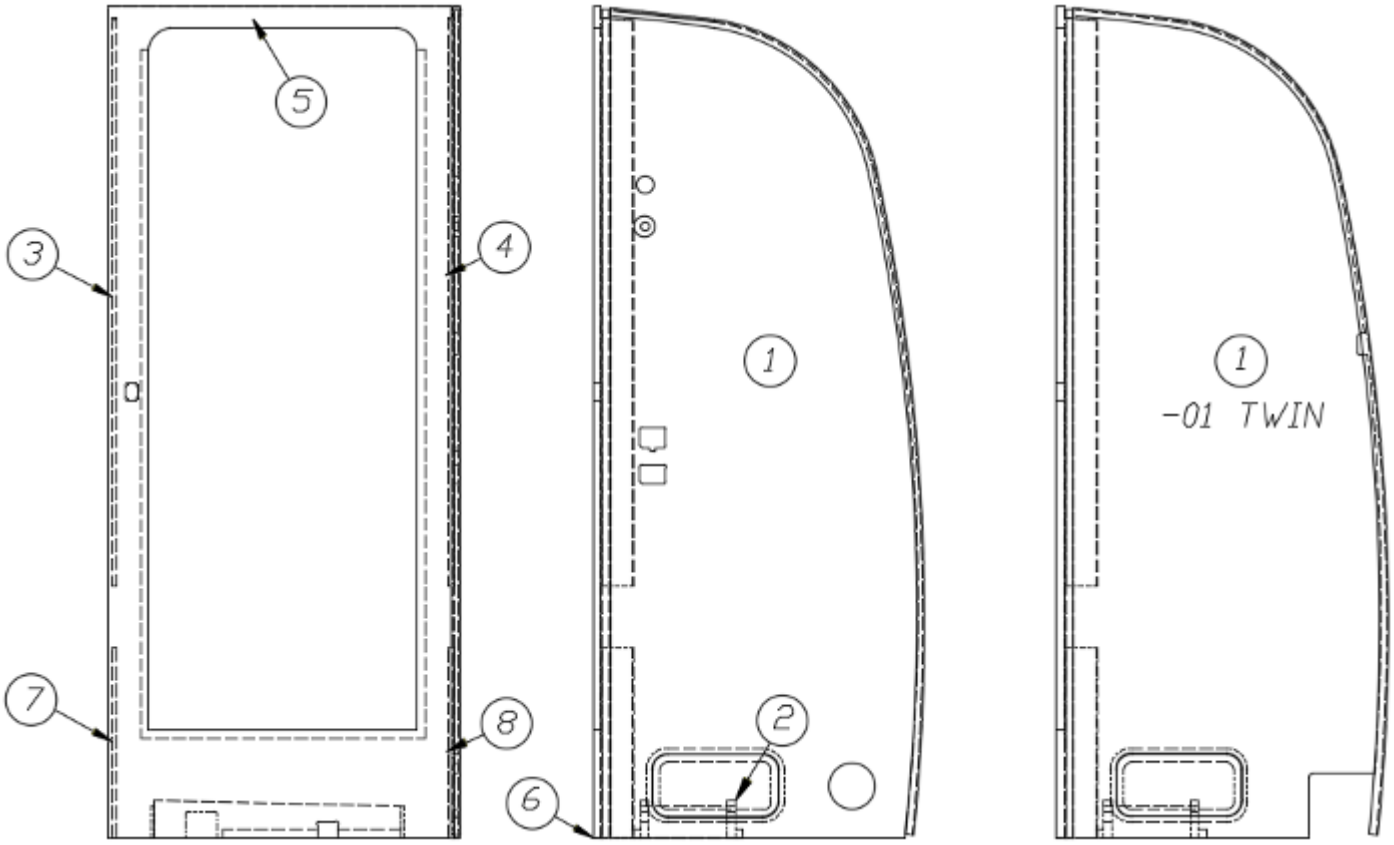

	966879-15	Shower Compartment
	966879-0115	Shower Compartment , 27FB Twin
1.	966879-151	Panel, 29.24 x 78.52
	966879-1518	Panel, 29.25 x 78.52, 27FB twins
2.	961916	Shower stand
3.	966879-3	Panel, 3 x 53.79
4.	966879-4	Panel, 3 x 53.79
5.	966879-155	Panel, 32.5 x 78.81
6.	801706-0018	Corner trim, 90°, 1" radius, Asian Sand
7.	966879-14	Panel, 3 x 18
8.	966879-15I	Panel, 3 x 18
	203081-02	Shower stall, 2 piece fiberglass, White
	703911-01	Shower door, Brushed Nickel
	203138-03	Extrusion, Plastic, Beige
	203693	T-molding, Beige Embossed

2018 INTERNATIONAL
FURNITURE, LAVATORY

Shower Compartment, 28’ Signature

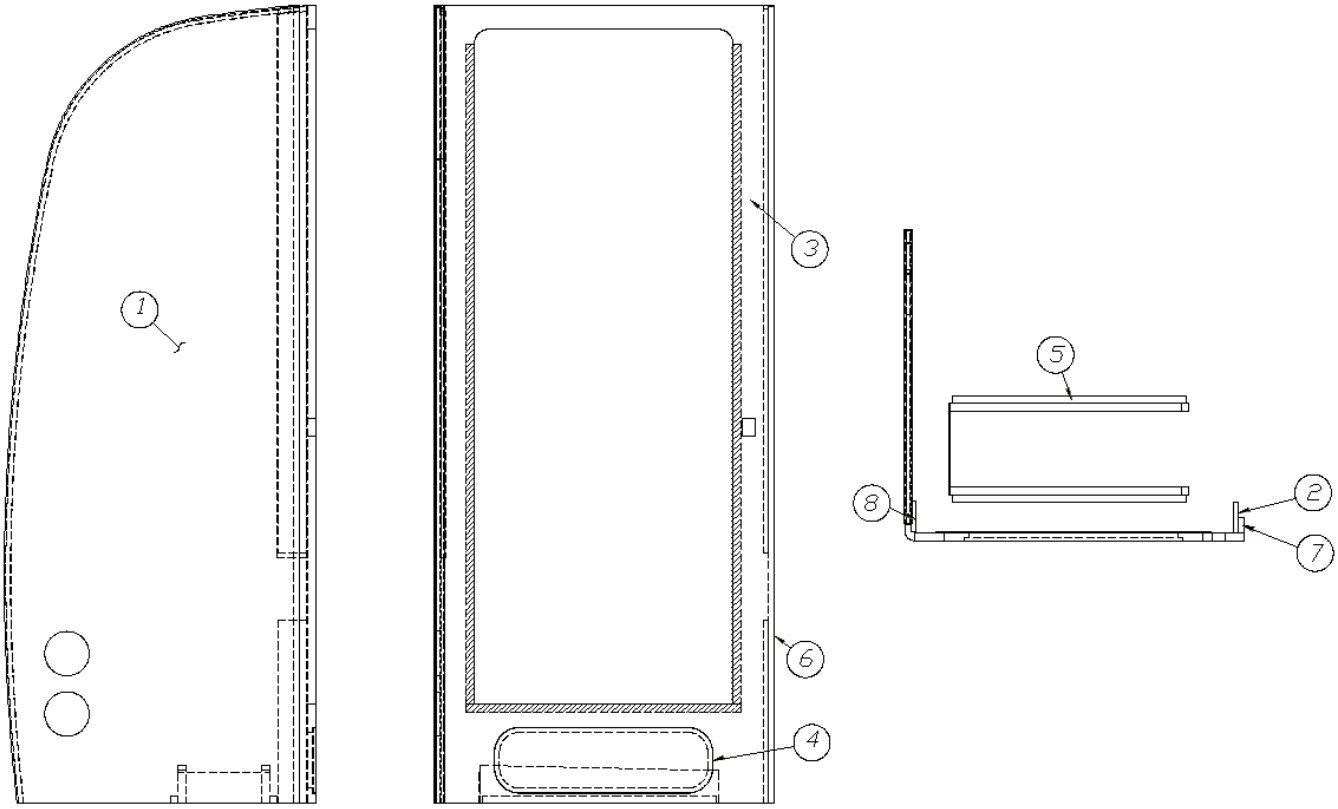

	966967	Shower Compartment
1.	966967-1	Panel, 28.89 x 78.37
2.	966967-2	Panel, 3 x 54
3.	966967-3	Panel, 33.31 x 78.71
4.	966967-4	Panel, 21.44 x 6.44
5.	961916	Shower stand
6.	966967-12	Panel, 3 x 18
7.	966967-13	Panel, 1.5 x 54
8.	966967-14	Panel, 1.5 x 54
	203081-01	Shower stall, 2 piece fiberglass
	703911-01	Shower door, Brushed Nickel
	203440	T-molding, .8125, Black Embossed

2018 INTERNATIONAL
FURNITURE, LAVATORY

Shower Compartment, 28’ Serenity

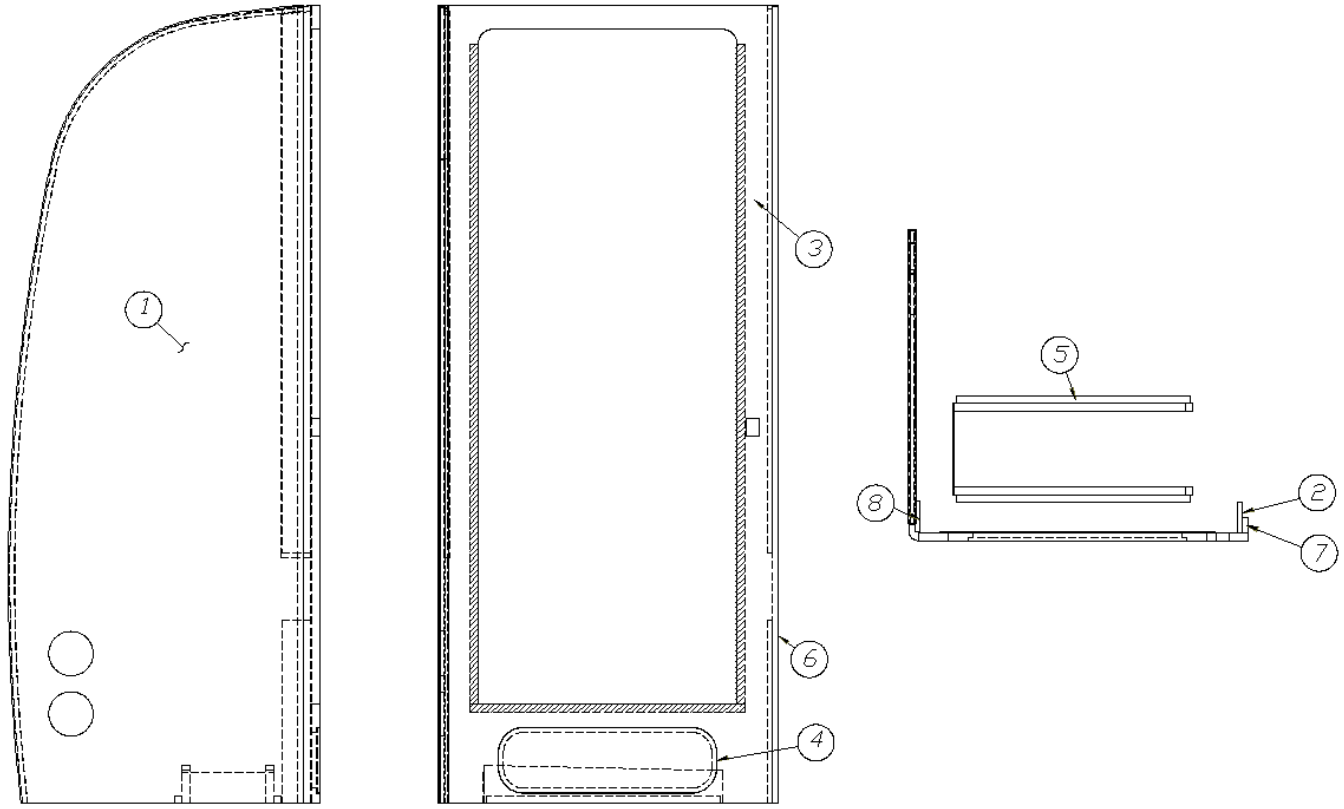

	966967-15	Shower Compartment
1.	966967-151	Panel, 28.89 x 78.37
2.	966967-2	Panel, 3 x 54
3.	966967-153	Panel, 33.31 x 78.71
4.	966967-154	Panel, 21.44 x 6.44
5.	961916	Shower stand
6.	966967-12	Panel, 3 x 18
7.	966967-13	Panel, 1.5 x 54
8.	966967-14	Panel, 1.5 x 54
	203081-01	Shower stall, 2 piece fiberglass
	703911-01	Shower door, Brushed Nickel
	203693	T-molding, .8125, Beige Embossed

2018 INTERNATIONAL
FURNITURE, LAVATORY

Latrine, Front Wall, 28’ Signature

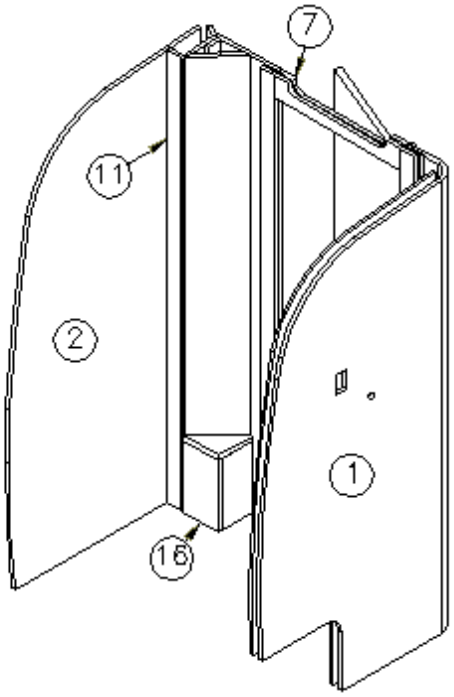

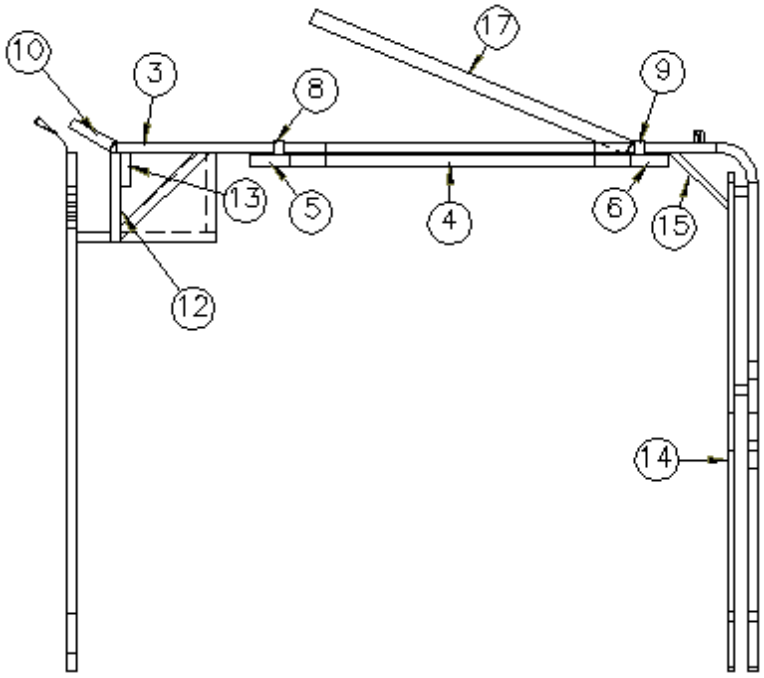

Parts Listed on Next Page

Latrine, Front Wall, 28’ Signature

	966990	Front Wall Latrine
1.	966991	Forward latrine wall
2.	966990-2	Panel, 38.58 x 79.22
3.	966990-3	Panel, 11.69 x 79.5
4.	966990-4	Panel, 25.25 x 3.75
5.	966990-5	Panel, 2.88 x 79.32
6.	966990-6	Panel, 2.88 x 79.32
7.	966990-7	Panel, 26.12 x 3.41
8.	966990-8	Panel, 1.06 x 79.42
9.	966990-9	Panel, 1.06 x 79.42
10.	966990-10	Door, 3.44 x 77.4
11.	966990-11	Panel, 2.5 x 78.82
12.	966990-12	Panel, 6.75 x 79.34
13.	966990-13	Panel, 2.5 x 79.38
14.	966990-14	Panel, 37.08 x 79.15
15.	966990-22	Panel, 6.18 x 79.34
16.	966996	Closeout, Black tank vent
17.	966995	Bath door w/porthole
	704166	Foldette door, Black
	381802-01	Tap cap, #2, White
	700811	Button cap, Handy
	700812	Button bottom, Oak
	380203-01	Piano hinge

2018 INTERNATIONAL
FURNITURE, LAVATORY

Latrine, Front Wall, 28’ Serenity

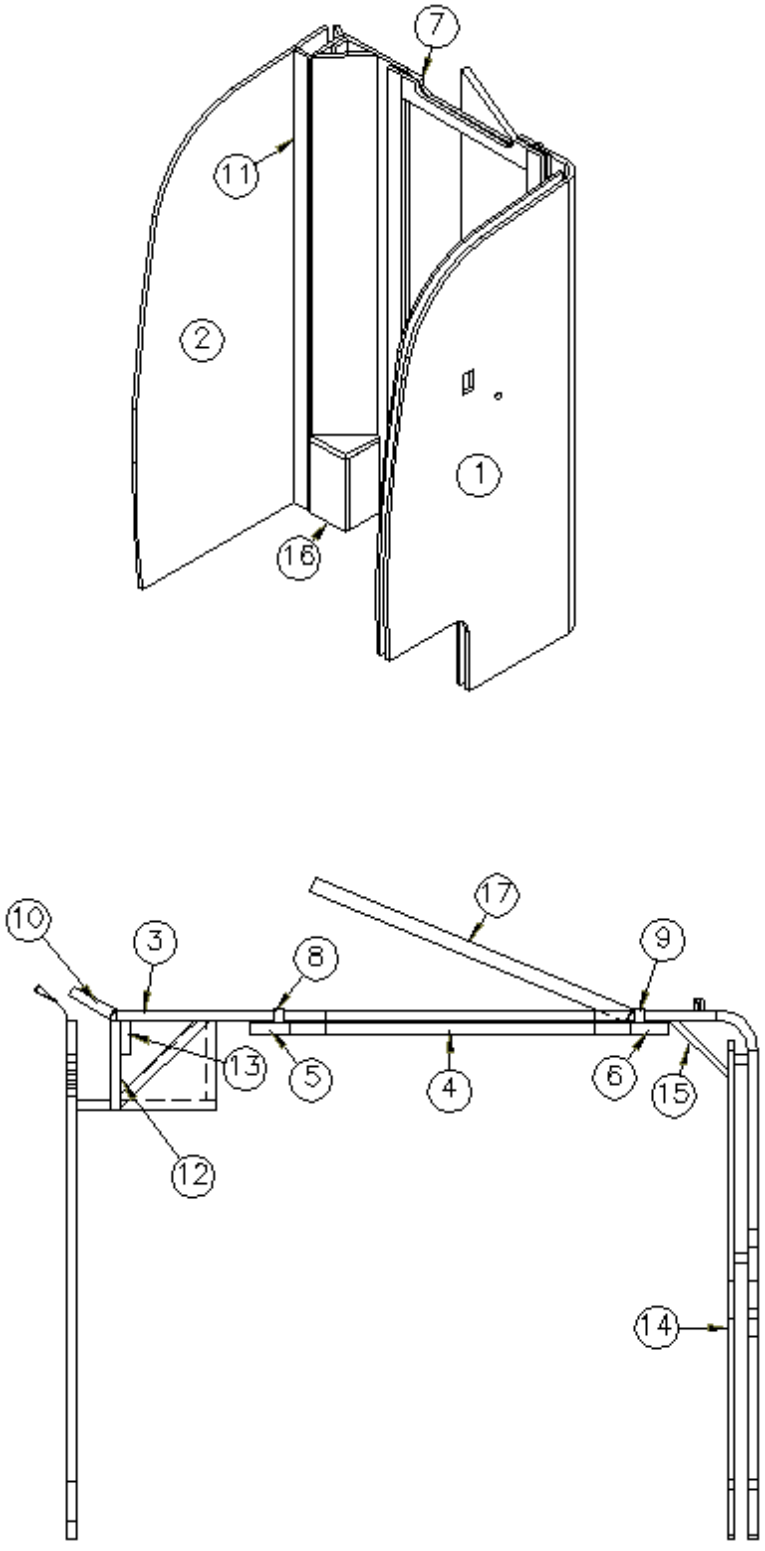

Parts Listed on Next Page

Latrine, Front Wall, 28’ Serenity

	966990-15	Front Wall Latrine
1.	966991-15	Forward latrine wall
2.	966990-152	Panel, 38.58 x 79.22
3.	966990-153	Panel, 11.69 x 79.5
4.	966990-154	Panel, 25.25 x 3.75
5.	966990-155	Panel, 2.88 x 79.32
6.	966990-156	Panel, 2.88 x 79.32
7.	966990-157	Panel, 26.12 x 3.41
8.	966990-158	Panel, 1.06 x 79.42
9.	966990-159	Panel, 1.06 x 79.42
10.	966990-1510	Door, 3.44 x 77.4
11.	966990-1511	Panel, 2.5 x 78.82
12.	966990-1512	Panel, 6.75 x 79.34
13.	966990-1513	Panel, 2.5 x 79.38
14.	966990-1514	Panel, 37.08 x 79.195
15.	966990-22	Panel, 6.18 x 79.34
16.	966996	Closeout, Black tank vent
17.	967545-15	Bath door w/window
	704166	Foldette door, Black
	700811	Button cap, Handy
	700812	Button bottom, Oak
	381802-01	Tap cap, #2, White
	380203-01	Piano hinge

2018 INTERNATIONAL
FURNITURE, LAVATORY

Bath Door w/Porthole, 23CB Signature

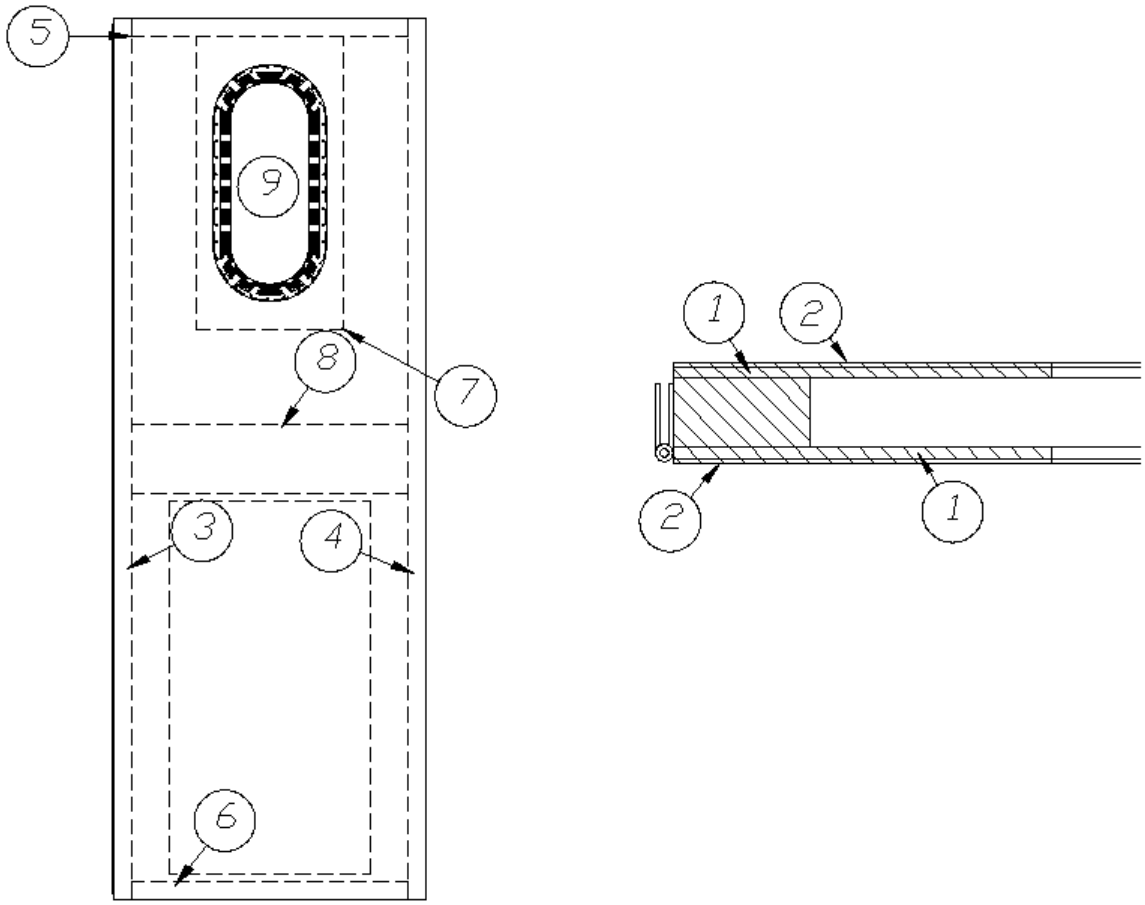

	*966940	Bath Door w/Porthole
1.	801917-01	Panel, MDF, 26” x 76”
2.	801355-01	Laminate, Frosty White
3.	966940-4	Panel, 1.5 x 72.5
4.	966940-5	Panel, 1.5 x 72.5
5.	966940-6	Panel, 1.5 x 23.25
6.	966940-8	Panel, 1.5 x 23.25
7.	966940-9	Panel, 12 x 24
8.	966940-10	Panel, 5.69 x 23.25
9.	371438	Bath door window, 18"
	203761-02	Trim, Bath door window
	380203-01	Piano hinge
	382034	Latch, Flush mount

*Replaced by 968783 in December, 2017

2018 INTERNATIONAL
FURNITURE, LAVATORY

Bath Door, 23CB, Signature

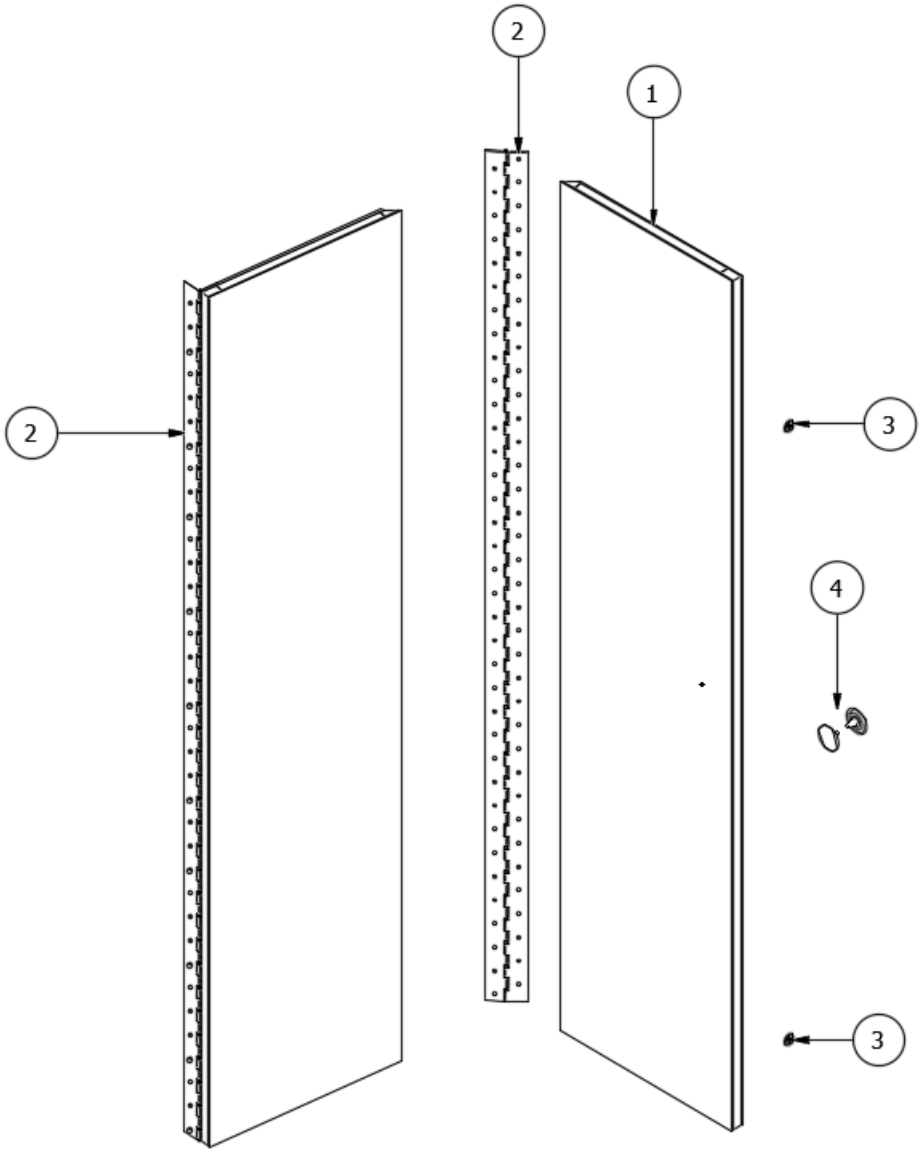

	*968783	Bath Door, Bi-fold
1.	968730	Bath Door panel
2.	382518	Piano Hinge, 3” Open
3.	382527	Magnet – 7/8 dia.
4.	382582	Knob, Bathroom Door

*Replaced 966940 in December, 2017

2018 INTERNATIONAL
FURNITURE, LAVATORY

Bath Door w/Porthole, 23FB Signature

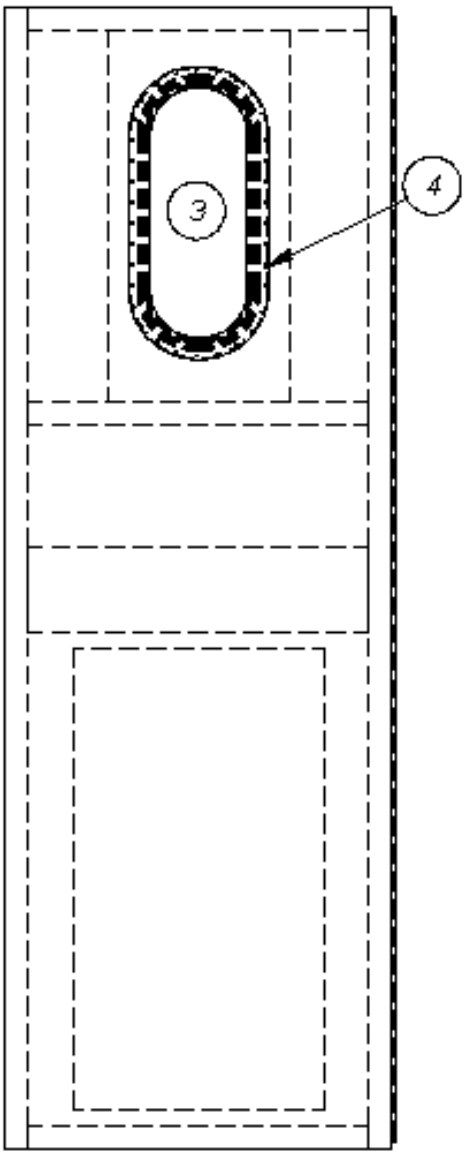

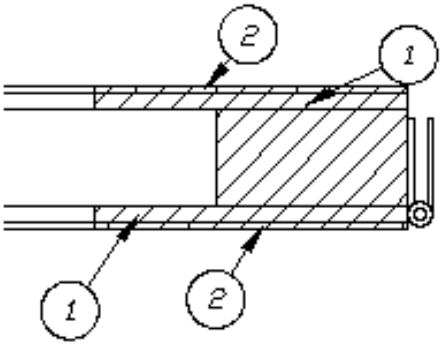

	967637	Bath Door w/Porthole
1.	801917-01	Panel, MDF, 26” x 76”
2.	801355-01	Laminate, Frost White
3.	371438	Bath Window, 18"
4.	203761-02	Trim, Bath door window
	381771	Latch, Lever lockset
	380203-01	Piano hinge
	454320	Door handle cover
	365364-02	Edgebanding, .94”, Ebony Woods

Bath Door w/Porthole, 25’, 30’ Signature

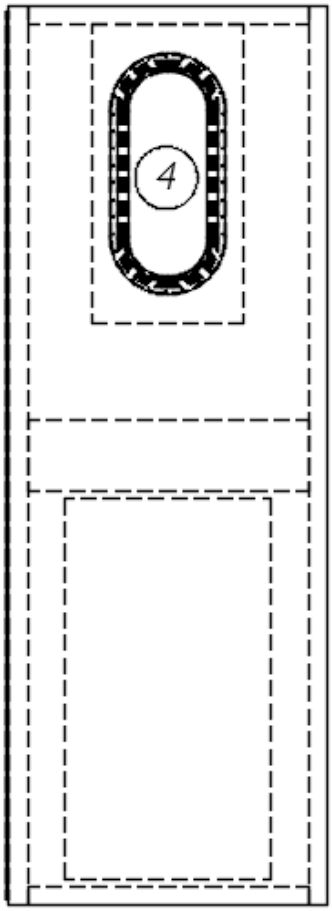

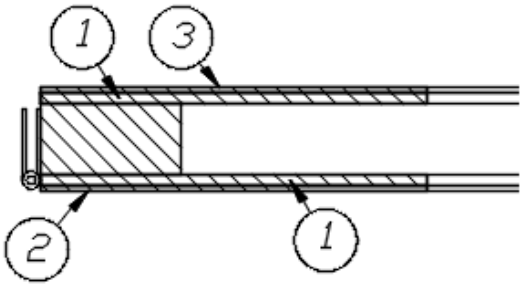

	968405-02	Bath Door w/Porthole
1.	801917-01	Panel, MDF, 26” x 76”
2.	801355-01	Laminate, Frosty White
3.	801924-01	Laminate, Ebony woods
4.	371438	Bath door window, 18"
	203761-02	Trim, Bath door window
	380203-01	Piano hinge
	382034	Latch, Flush mount

2018 INTERNATIONAL
FURNITURE, LAVATORY

Bath Door w/Porthole, 25FB, 27FB Signature

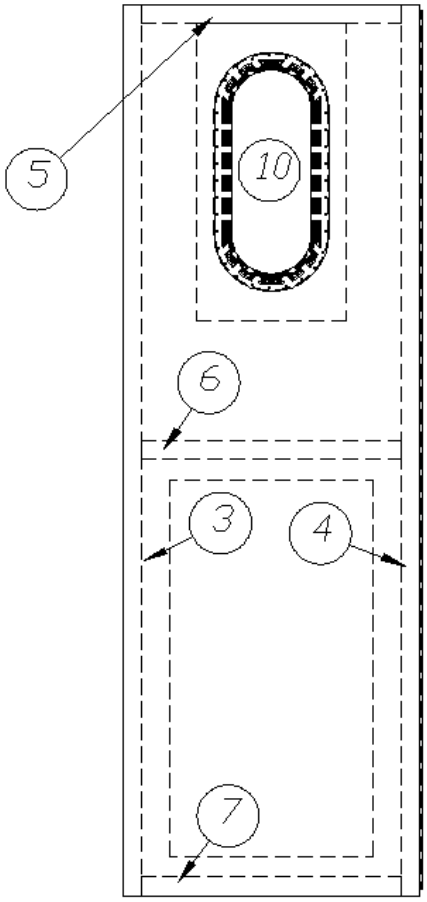

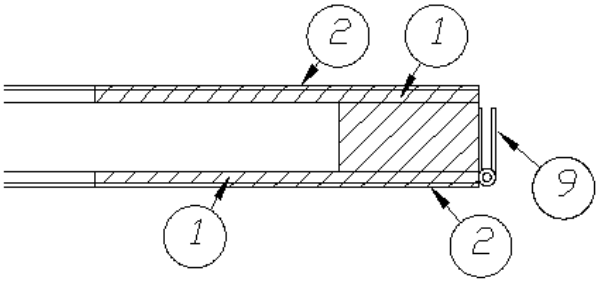

	966895	Bath Door w/Porthole
1.	801917-01	Panel, MDF, 26” x 76”
2.	801355-01	Laminate, Frosty White
3.	966895-4	Panel, 1.5 x 72.5
4.	966895-5	Panel, 1.5 x 72.5
5.	966895-6	Panel, 1.5 x 21.75
6.	966895-7	Panel, 1.5 x 21.75
7.	966895-9	Panel, 1.5 x 21.75
8.	966895-10	Panel, 12 x 24
9.	380203-01	Piano hinge
10.	371438	Bath door window
	365364-03	Edgebanding, 1.25”, Ebony Woods
	381771	Latch, Lever lockset
	203761-02	Trim, Bath door window
	454320	Handle cover

Bath Door w/Porthole, 28’ Signature

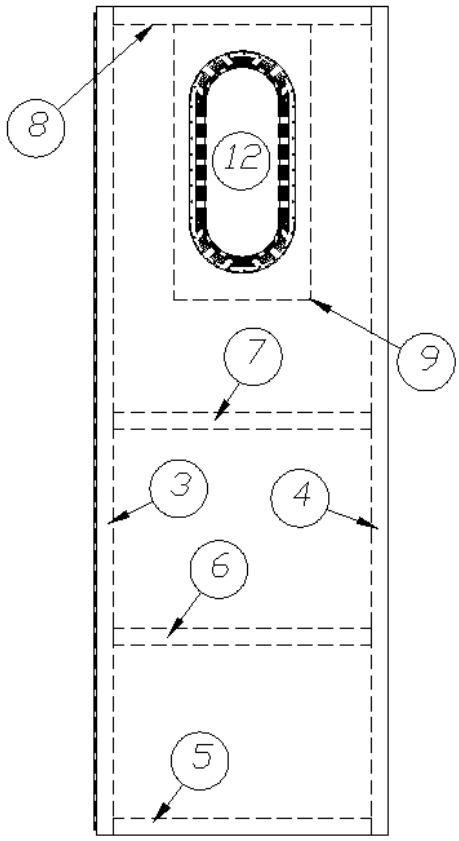

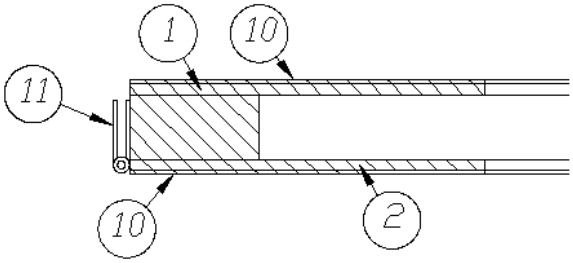

	966995	Bath Door w/Porthole
1.	966995-1	Panel, 27.5 x 74
2.	966995-2	Panel, 27.5 x 74
3.	966995-3	Panel, 1.5 x 72.5
4.	966995-4	Panel, 1.5 x 72.5
5.	966995-5	Panel, 1.5 x 22.5
6.	966995-6	Panel, 1.5 x 22.5
7.	966995-7	Panel, 1.5 x 22.5
8.	966995-8	Panel, 1.5 x 22.5
9.	966995-9	Panel, 12 x 14
10.	801355-01	Laminate, Frosty White
11.	380203-01	Piano hinge
12.	371438	Bath door window
	381771	Latch, Lever lockset
	203761-02	Trim, Bath door window
	454320	Handle cover

2018 INTERNATIONAL
FURNITURE, LAVATORY

Bath Door w/Window, 23CB Serenity

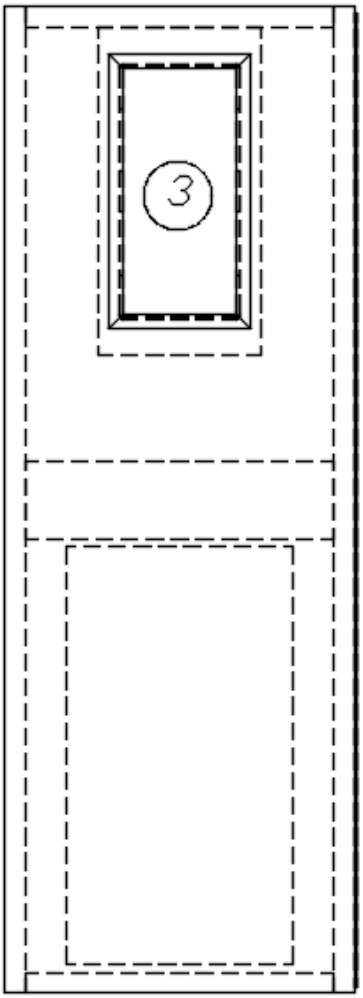

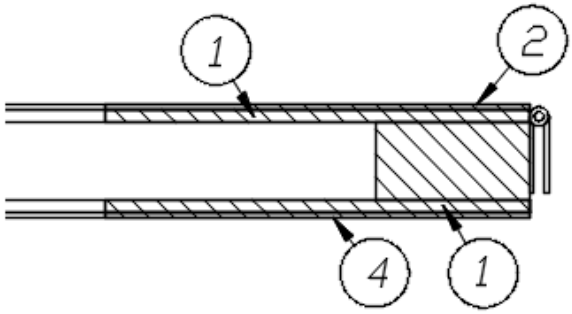

	*967544-15	Bath Door w/Window
1.	801917-01	Panel, MDF, 26 x 76
2.	801833-01	Laminate, Asian Sand
3.	203676	Bath door window, Gingko Thatch
4.	801355-01	Laminate, Frosty White
	380203-01	Piano hinge
	382034	Latch, Flush mount

*Replaced by 968783 in December, 2017

2018 INTERNATIONAL
FURNITURE, LAVATORY

Bath Door, 23CB, Serenity

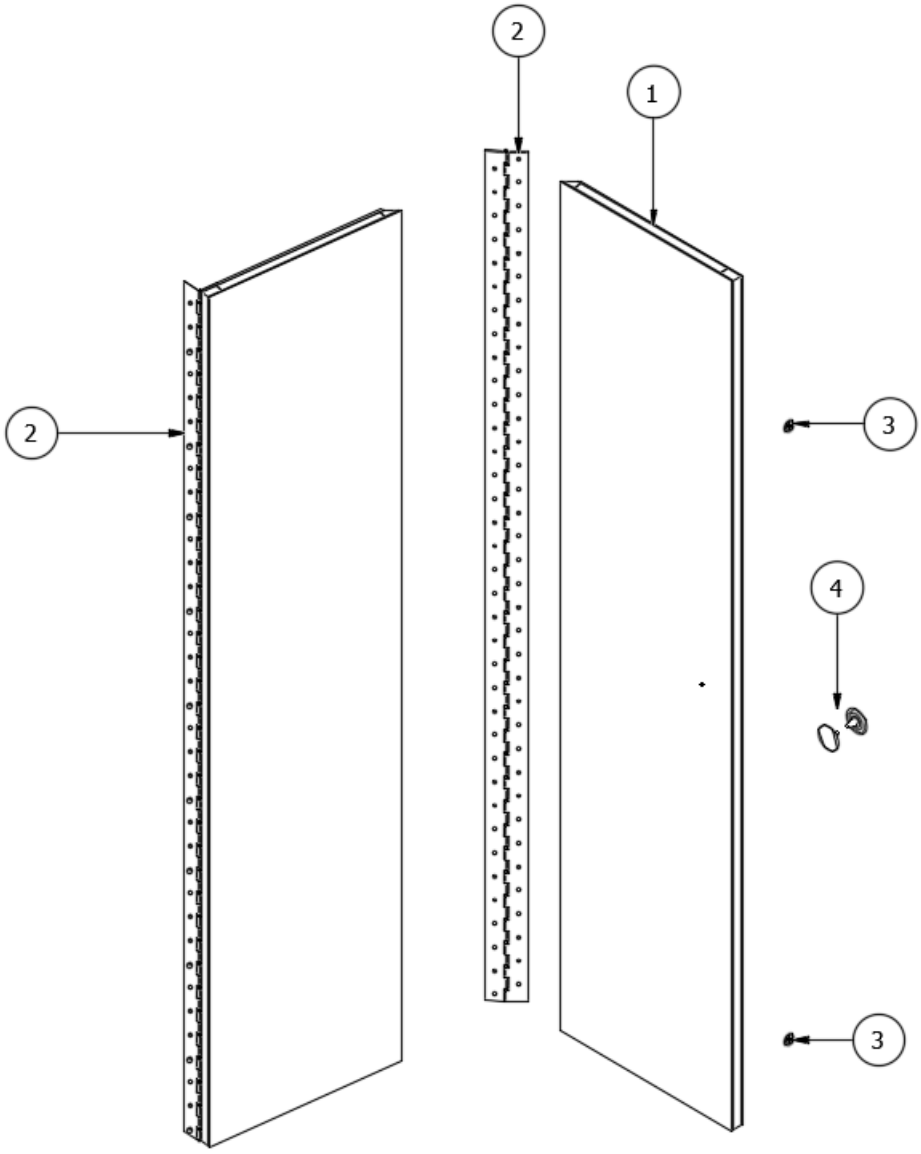

	*968783	Bath Door, Bi-fold
1.	968730	Bath Door panel
2.	382518	Piano Hinge, 3” Open
3.	382527	Magnet – 7/8 dia.
4.	382582	Knob, Bathroom Door

*Replaced 967544-15 in December, 2017

2018 INTERNATIONAL
FURNITURE, LAVATORY

Bath Door w/Window, 23FB Serenity

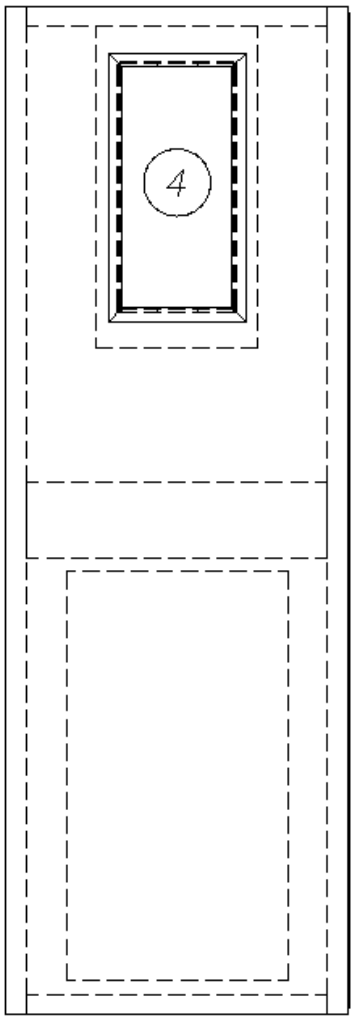

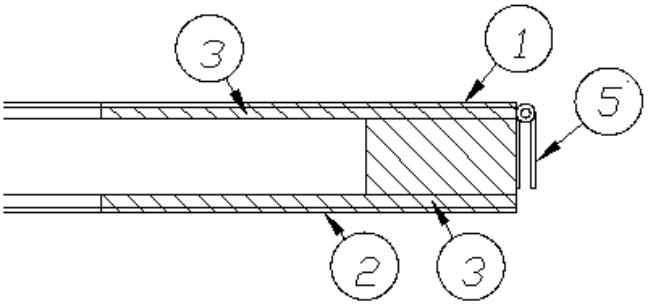

	967647	Bath Door w/Window
1.	967647-1	Panel, 25.5 x 75.13
2.	967647-2	Panel, 25.5 x 75.13
3.	801917-01	Panel, MDF, 26” x 76”
4.	203676	Bath Door Window
5.	380203-01	Piano hinge
	801833-01	Laminate, Asian Sand
	801355-01	Laminate, Frosty White
	365344-03	Edgebanding, 1.25”, Pearl Bisque
	381771	Latch, Lever lockset
	454320	Door handle cover

Bath Door w/Window, 25’, 30’ Serenity

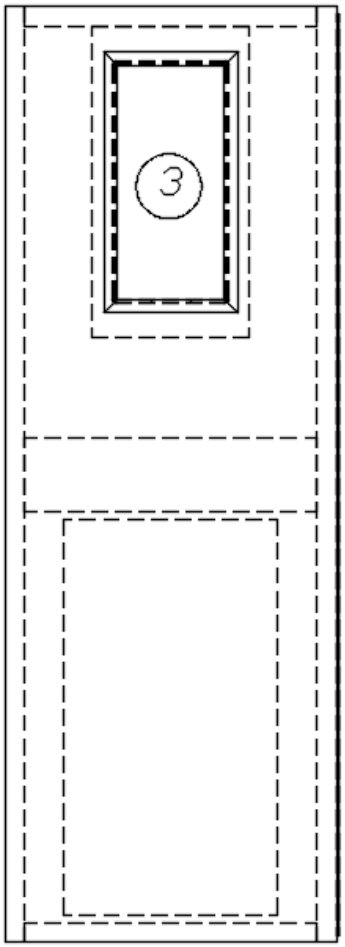

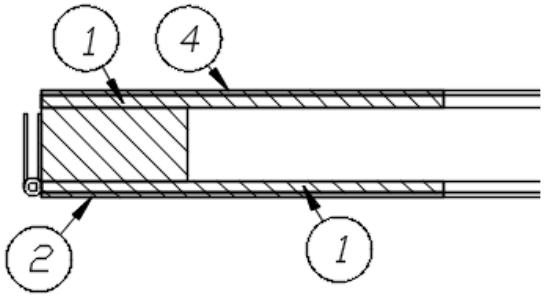

	968405-03	Bath Door w/Window
1.	801917-01	Panel, MDF, 26” x 76”
2.	801833-01	Laminate, 4’ x 8’, Asian Sand
3.	203676	Bath door window
4.	801355-01	Laminate, 4’ x 8’, Frosty White
	380203-01	Piano hinge
	365344-03	Edgebanding, 1.25”, Pearl Bisque
	382034	Latch, Flush mount

2018 INTERNATIONAL
FURNITURE, LAVATORY

Bath Door w/Window, 25FB, 27FB Serenity

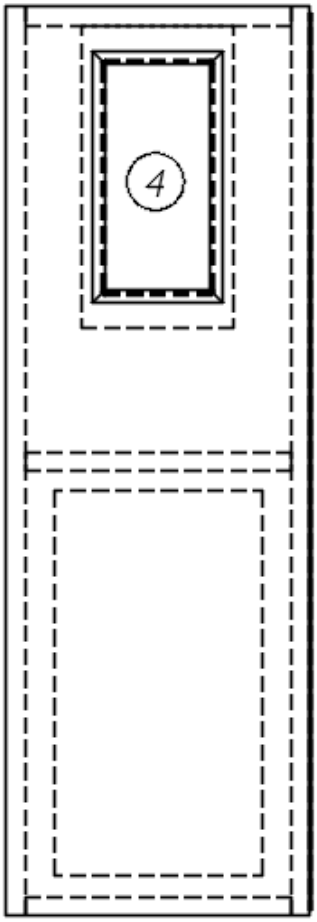

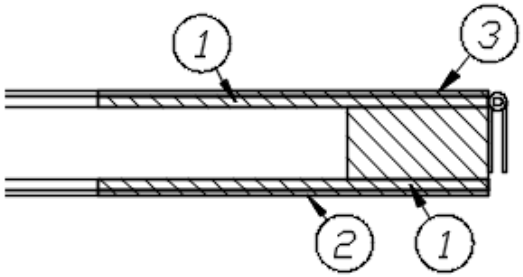

	967546-15	Bath Door w/Window
1.	801917-01	Panel, MDF, 26” x 76”
2.	801833-01	Laminate, Asian Sand
3.	801355-01	Laminate, Frosty White
4.	203676	Bath door window
	380203-01	Piano hinge
	365344-03	Edgebanding, 1.25”, Pearl Bisque
	381771	Latch, Lever lockset
	454320	Door handle cover

Bath Door w/Window, 28’ Serenity

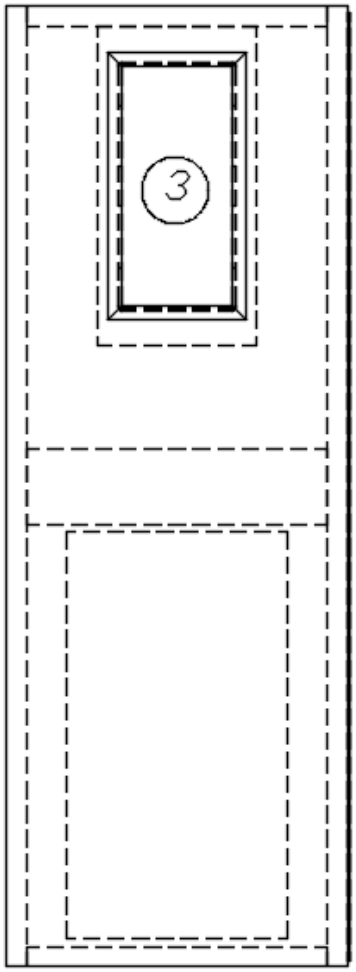

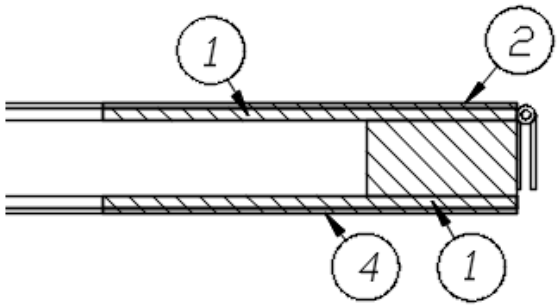

	967545-15	Bath Door w/Window
1.	801917-01	Panel, MDF, 26” x 76”
2.	801833-01	Laminate, 4’ x 8’, Asian Sand
3.	203676	Bath door window
4.	801355-01	Laminate, 4’ x 8’, Frosty White
	380203-01	Piano hinge
	365344-03	Edgebanding, 1.25”, Pearl Bisque
	381771	Latch, Lever lockset, Privacy
	454320	Door handle cover

2018 INTERNATIONAL
FURNITURE, LAVATORY

Medicine Cabinet, Upper, 23CB

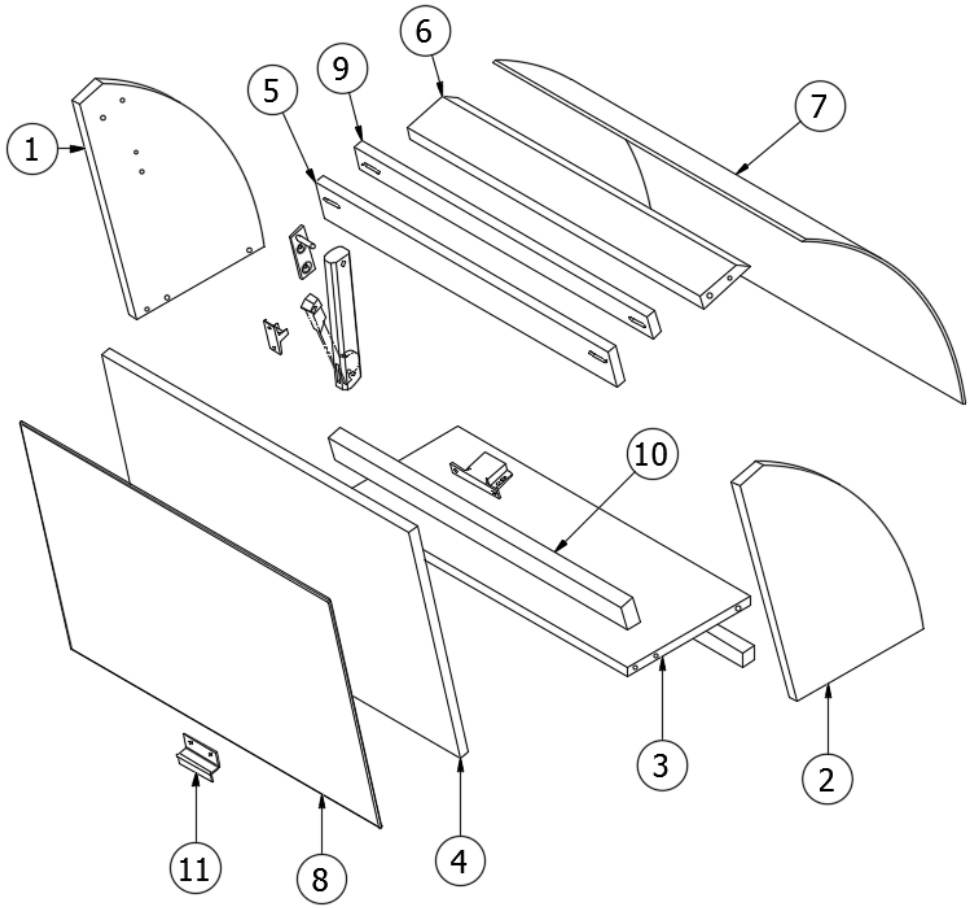

	966921	Upper Medicine Cabinet
1.	966921-1	Panel, 10.44 x 13.5
2.	966921-2	Panel, 10.44 x 13.5
3.	966921-3	Panel, 7 x 17.97
4.	966921-4	Panel, 13.88 x 18.88
5.	966921-5	Panel, 2.25 x 17.97
6.	966921-6	Panel, 2.5 x 17.97
7.	966921-7	Panel, 16. 25 x 19
8.	372203-05	Mirror, Polished edges, 19 x 14
9.	966921&002012CC	Panel, 1.38 x 17.97
10.	966921&002118CC	Panel, 1.63 x 17.97
11.	385940-02	Mirror pull, Chrome
	382159	Pivot hinge, Nickel
	381228-02	Catch, Grabber door (5lb Pull)
	382466-01	Lid stay, Compartment door
	382466-02	Lid stay, Side bracket
	382466-03	Lid stay, Door bracket

2018 INTERNATIONAL
FURNITURE, LAVATORY

Medicine Cabinet, Lower, 23CB

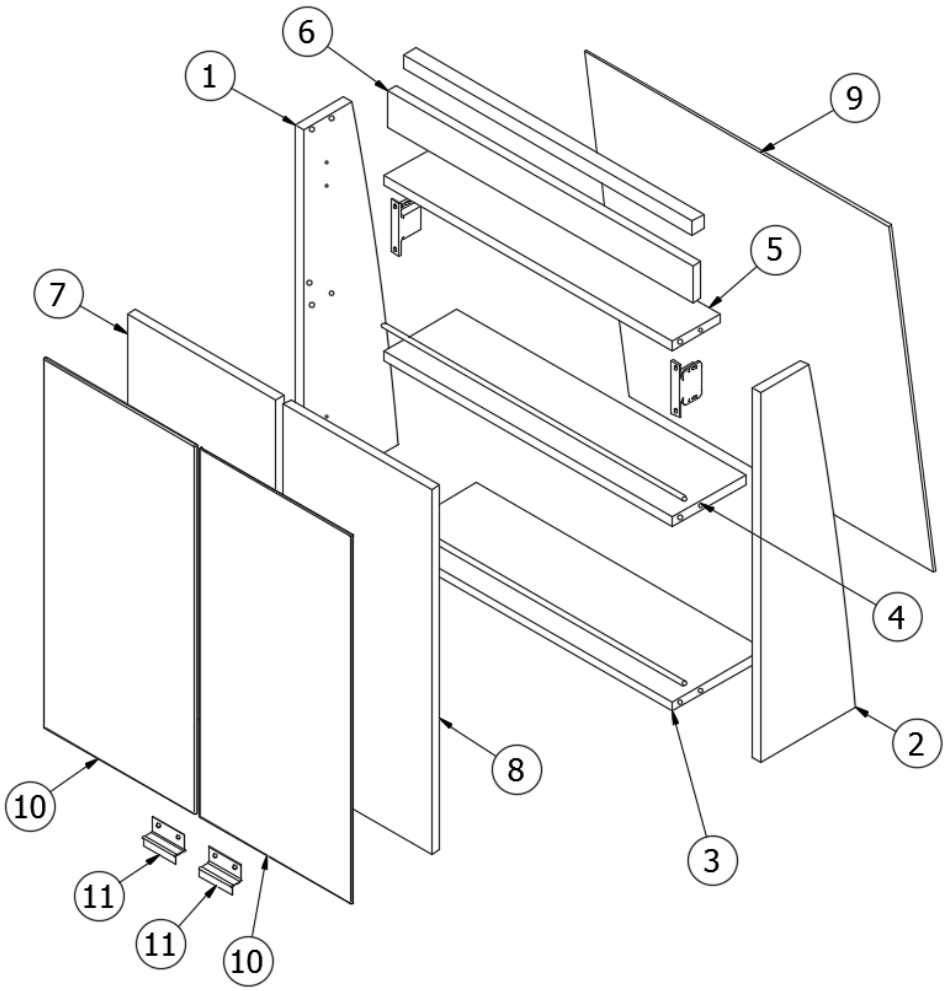

	966922	Lower Medicine Cabinet
1.	966922-1	Panel, 5.89 x 20
2.	966922-2	Panel, 5.89 x 20
3.	966922-3	Panel, 5.75 x 17.97
4.	966922-4	Panel, 4.56 x 17.97
5.	966922-5	Panel, 3 x 17.97
6.	966922-6	Panel, 19 x 2
7.	966922-7	Panel, 9.25 x 19.75
8.	966922-8	Panel, 9.25 x 19.75
9.	966922-9	Panel, 20.25 x 19
10.	372203-24	Mirror, Safety glass, 9.5 x 20
11.	385940-02	Mirror pull, Chrome
	115042	Aluminum rod, 6' Length
	382159	Pivot hinge, Nickel
	381228-02	Catch, Grabber door (5lb Pull)

2018 INTERNATIONAL
FURNITURE, LAVATORY

Medicine Cabinet, 25FB, 27FB

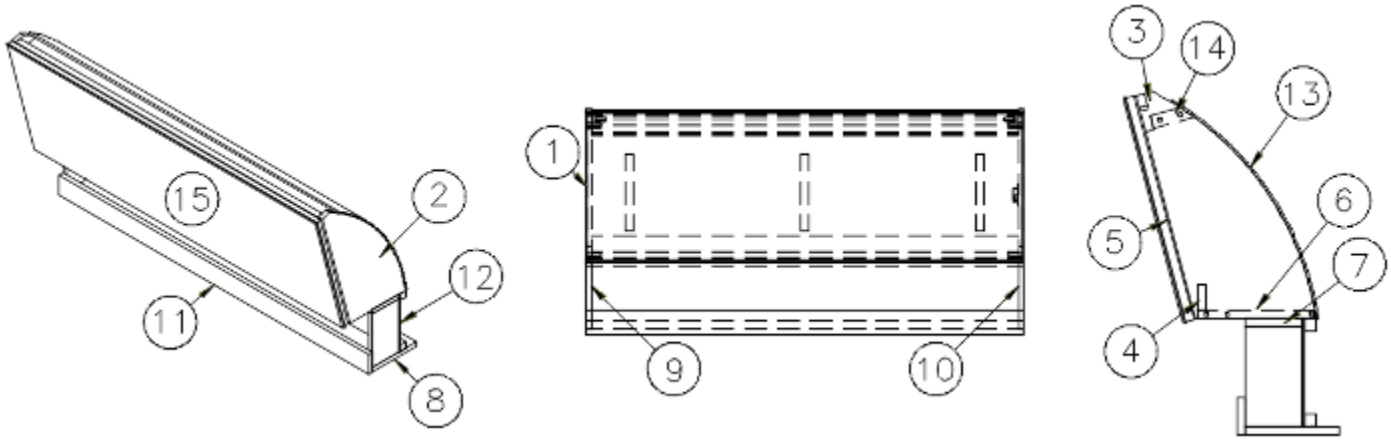

	966896	Medicine Cabinet
1.	966896-1	Panel, 10.81 x 13.56
2.	966896-2	Panel, 10.81 x 13.56
3.	966896-3	Panel, 2.25 x 39
4.	966896-4	Panel, 1.5 x 39
5.	966896-5	Panel, 13.88 x 39.88
6.	966896-6	Panel, 7 x 39
7.	966896-7	Panel, 3.42 x 40
8.	966896-8	Panel, 5.67 x 40
9.	966896-9	Panel, 3.42 x 6
10.	966896-10	Panel, 3.42 x 6
11.	966896-11	Panel, 2.25 x 40
12.	966896-12	Panel, 6.5 x 40
13.	966896-13	Panel, 16.25 x 40
14.	966896-23	Panel, 2.5 x 19
15.	372203-33	Mirror, Safety glass, 14" x 40"
	382159	Pivot hinge, Nickel
	381228-02	Catch, Grabber door (5lb Pull)
	365340-01	Edgebanding, .63”, Frosty White
	365001	Tape, Double coated foam
	360180	Adhesive seal, Sikaflex 221, Gray
	385940-02	Mirror pull, Chrome
	382466-01	Lid stay, Compartment door
	382466-02	Lid stay, Side bracket
	382466-03	Lid stay, Door bracket

2018 INTERNATIONAL
FURNITURE, LAVATORY

Medicine Cabinet, 28’

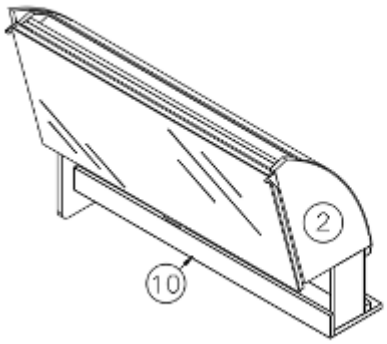

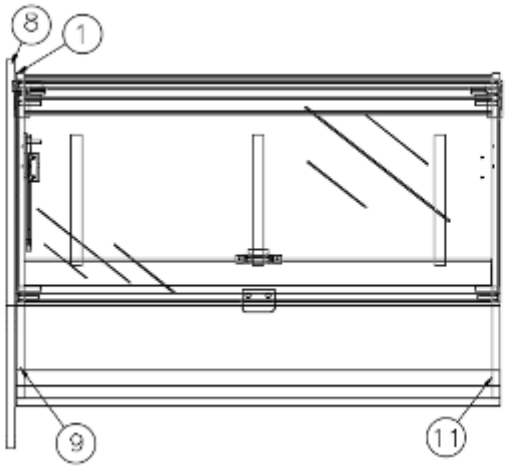

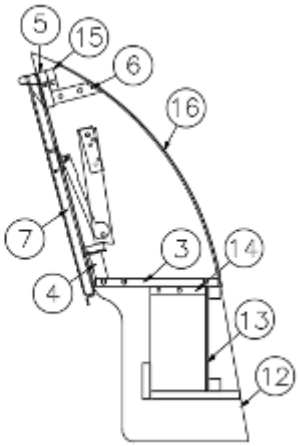

	967003	Medicine Cabinet
1.	967003-1	Panel, 10.81 x 13.56
2.	967003-2	Panel, 10.81 x 13.56
3.	967003-3	Panel, 7 x 28.97
4.	967003-4	Panel, 1.5 x 28.97
5.	967003-5	Panel, 2.25 x 28.97
6.	967003-6	Panel, 2.5 x 28.97
7.	967003-7	Panel, 16.125 x 30
8.	967005	Closeout, Medicine cabinet
9.	967003-15	Panel, 3.42 x 6.5
10.	967003-16	Panel, 2.25 x 29.97
11.	967003-17	Panel, 3.42 x 6.5
12.	967003-18	Panel, 5.5 x 29.97
13.	967003-20	Panel, 6.5 x 29.97
14.	967003-21	Panel, 3.42 x 28.97
15.	967003-27	Panel, 1.38 x 28.97
16.	967003-31	Panel, 16.125 x 30
	382159	Pivot hinge, Nickel
	381228	Catch, Grabber door
	372203-30	Mirror, Safety glass, 14" x 30"
	385940-02	Mirror pull, Chrome
	195329-202	Hemisphere, Clear bump-on

2018 INTERNATIONAL
FURNITURE, LAVATORY

Lavatory Cabinet, 23CB Signature

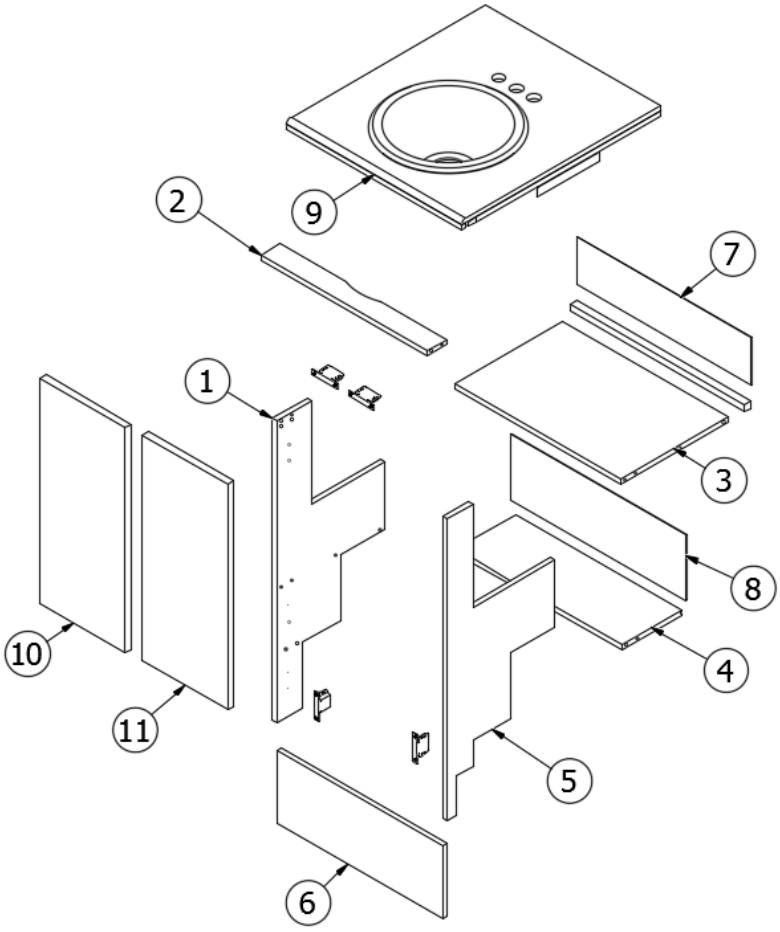

	966919	Lavatory Cabinet
1.	966919-1	Panel, 12.38 x 30
2.	966919-2	Panel, 2.25 x 19
3.	966919-3	Panel, 12.38 x 19
4.	966919-4	Panel, 6.81 x 19
5.	966919-5	Panel, 12.38 x 30
6.	966919-6	Panel, 19 x 7.25
7.	966919-7	Panel, 4.75 x 20
8.	966919-8	Panel, 6.5 x 20
9.	966920	Lavy top
10.	966919-13	Door, 9.75 x 22.88
11.	966919-14	Door, 9.75 x 22.88
	381607-11	Hinge, Self-close
	382029-00	Handle bar, 7.48"
	381228-02	Catch, Grabber door (5lb Pull)
	800422	Dowel pin

2018 INTERNATIONAL
FURNITURE, LAVATORY

Lavatory Cabinet, 23CB Serenity

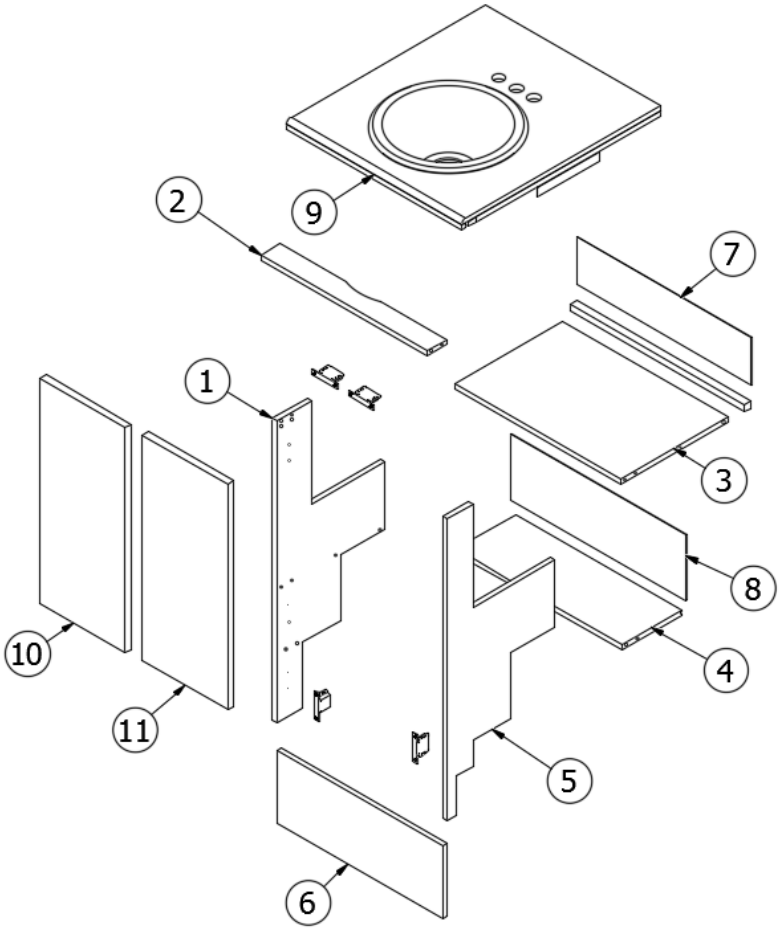

	966919-15	Lavatory Cabinet
1.	966919-1	Panel, 12.38 x 30
2.	966919-2	Panel, 2.25 x 19
3.	966919-3	Panel, 12.38 x 19
4.	966919-4	Panel, 6.81 x 19
5.	966919-5	Panel, 12.38 x 30
6.	966919-156	Panel, 19 x 7.25
7.	966919-7	Panel, 4.715 x 20
8.	966919-8	Panel, 6.5 x 20
9.	966920-15	Lavy top
10.	966919-1513	Door, 9.75 x 22.88
11.	966919-1514	Door, 9.75 x 22.88
	381607-11	Hinge, Self-close
	382115	Pull, Flat Black
	381228-02	Catch, Grabber door, (5lb Pull)
	800422	Dowel pin

2018 INTERNATIONAL
FURNITURE, LAVATORY

Lavatory Cabinet, 23FB Signature

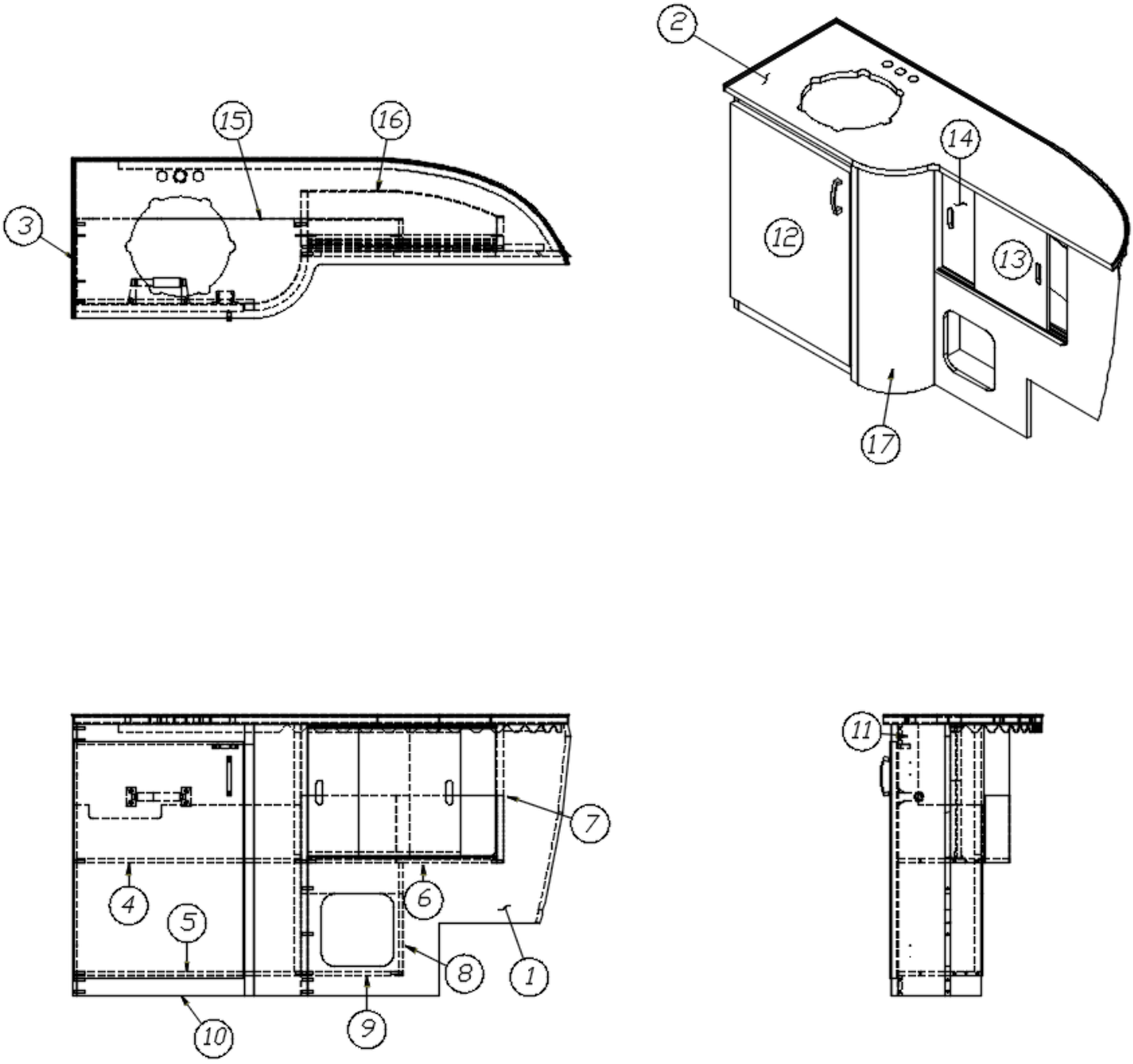

Parts Listed on Next Page

Lavatory Cabinet, 23FB Signature

	967321	Lavatory Cabinet
1.	967321-1	Panel, 28.89 x 30
2.	967321-2	Panel, 54.48 x 17.5
3.	967321-3	Panel, 9.27 x 30
4.	967321-4	Panel, 9.27 x 24.64
5.	967321-5	Panel, 9.27 x 24.64
6.	967321-6	Panel, 7.02 x 20.85
7.	967321-7	Panel, 3.75 x 15.38
8.	967321-8	Panel, 3.5 x 12.88
9.	967321-9	Panel, 3.5 x 10
10.	967321-10	Panel, 2.25 x 19.42
11.	967321-11	Panel, 2.25 x 19.42
12.	967321-12	Door, 18.67 x 26.13
13.	967321-13	Door, 11.25 x 14.5
14.	967321-14	Door, 11.25 x 14.5
15.	967321-15I	Panel, 36.42 x 18.75
16.	967321-17	Panel, 22.38 x 7.5
17.	967198	Lavy sub assembly, Radius
	381607-11	Hinge, Self-close
	382029-04	Handle bar, 15”
	382030	Pull, Recessed finger
	381228-02	Catch, Grabber door, (5lb pull)
	380034	Toilet paper holder, Chrome
	203445	T-molding, Flexible Black poly
	201673	Reverse cove molding, white
	114812	Aluminum angle, 1 x 1
	115374	Extrusion, Sliding door track, .5"
	704041	Pile seal weather strip
	365364-01	Edgebanding, .63”, Ebony Woods
	365364-02	Edgebanding, .94”, Ebony Woods

2018 INTERNATIONAL
FURNITURE, LAVATORY

Lavatory Cabinet, 23FB Serenity

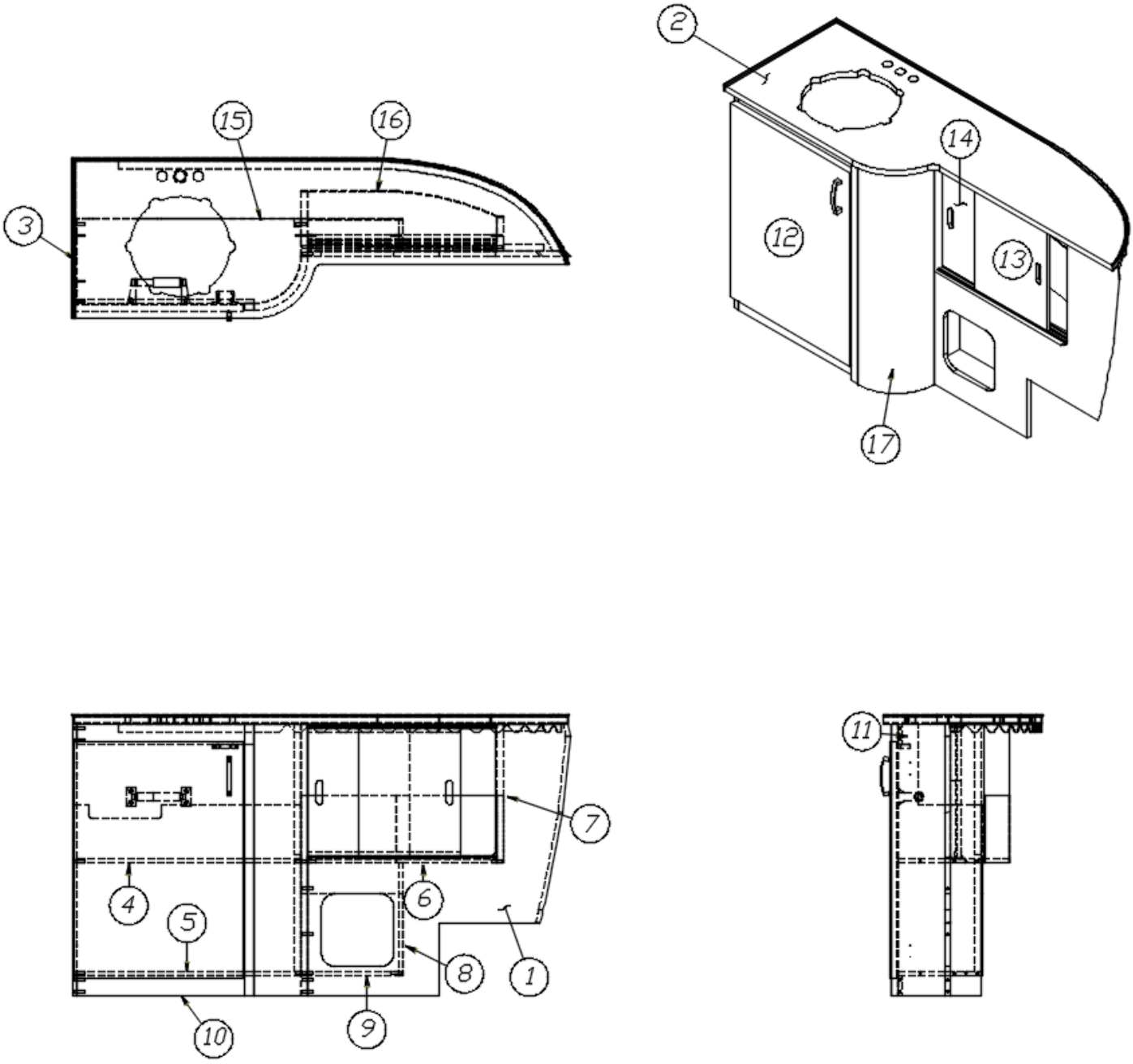

Parts Listed on Next Page

Lavatory Cabinet, 23FB Serenity

	967321-15	Lavatory Cabinet
1.	967321-151	Panel, 28.89 x 30
2.	967321-152	Panel, 54.48 x 17.5
3.	967321-3	Panel, 9.27 x 30
4.	967321-4	Panel, 9.27 x 24.64
5.	967321-5	Panel, 9.27 x 24.64
6.	967321-6	Panel, 7.02 x 20.85
7.	967321-7	Panel, 3.75 x 15.38
8.	967321-8	Panel, 3.5 x 12.88
9.	967321-9	Panel, 3.5 x 10
10.	967321-1510	Panel, 2.25 x 19.42
11.	967321-1511	Panel, 2.25 x 19.42
12.	967321-1512	Door, 18.67 x 26.13
13.	967321-1513	Door, 11.25 x 14.5
14.	967321-1514	Door, 11.25 x 14.5
15.	967321-15I	Panel, 36.42 x 18.75
16.	967321-1517	Panel, 22.38 x 7.5
17.	967198-15	Lavy sub assembly, Radius
	381607-11	Hinge, Self-close
	382115	Pull, Flat Black
	382030	Pull, Recessed finger
	381228-02	Catch, Grabber door (5lb pull)
	380034	Toilet paper holder, Chrome
	203445	T-molding, Flexible Black poly
	201673	Reverse cove molding, White
	115374	Extrusion, Sliding door track
	114812	Aluminum angle, 1 x 1
	704041	Pile seal weather strip
	365344-01	Edgebanding, .63”, Pearl Bisque
	365344-02	Edgebanding, .94”, Pearl Bisque

2018 INTERNATIONAL
FURNITURE, LAVATORY

Lavatory Cabinet, 25’ Signature

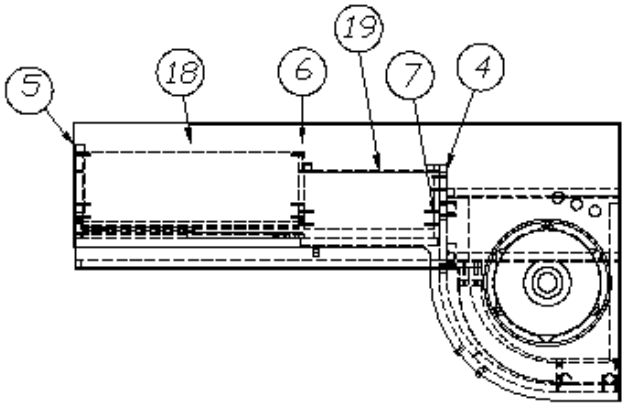

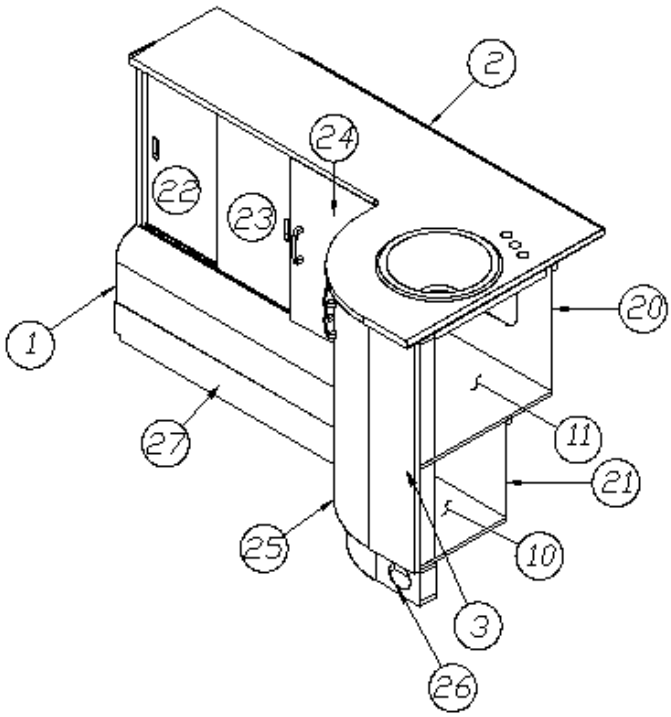

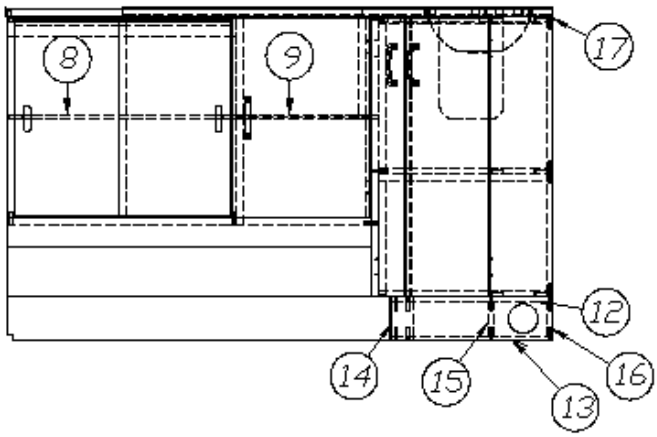

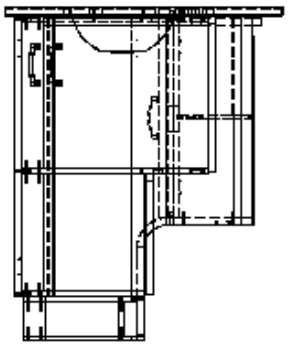

Parts Listed on Next Page

Lavatory Cabinet, 25’ Signature

	967521	Lavatory Cabinet
1.	967522	Sub assembly, Lavy base
2.	967618	Lavy top
3.	967521-3	Panel, 6.44 x 28.5
4.	967521-4	Panel, 10.3 x 28.5
5.	967521-5	Panel, 8.75 x 20.2
6.	967521-6	Panel, 8.75 x 20.5
7.	967521-7	Panel, 7.55 x 20.5
8.	967521-8	Panel, 7.05 x 22
9.	967521-9	Panel, 5.8 x 13.25
10.	967521-10	Panel, 12.5 x 17.75
11.	967521-11	Panel, 19 x 17.75
12.	967521-12	Panel, 11.56 x 16.5
13.	967521-13	Panel, 11.56 x 16.5
14.	967521-14	Panel, 2.25 x 3.5
15.	967521-15I	Panel, 2.25 x 3.5
16.	967521-16	Panel, 2.25 x 3.5
17.	967521-21	Panel, 19 x 17.75
18.	967521-22	Panel, 23.25 x 19.25
19.	967521-23	Panel, 13.75 x 11
20.	967521-24	Panel, 16 x 17.75
21.	967521-25	Panel, 17.63 x 12
22.	967521-26	Door, 11.34 x 20.13
23.	967521-27	Door, 11.34 x 20.13
24.	967521-28	Door, 13.88 x 20.25
25.	801788-0124	Door, 9.18 x 28.25, Ebony
26.	115438-03	Toe Kick, 23.75”
27.	115438-04	Toe Kick, 39.13”
	381607-10	Hinge, Self-close
	382044	Handle, Brushed Nickel
	382030	Pull, Recessed finger
	381228-02	Catch, Grabber door (5lb Pull)
	115374	Extrusion, Sliding door track
	704041	Pile seal weather strip

2018 INTERNATIONAL
FURNITURE, LAVATORY

Lavatory Cabinet, 25’ Serenity

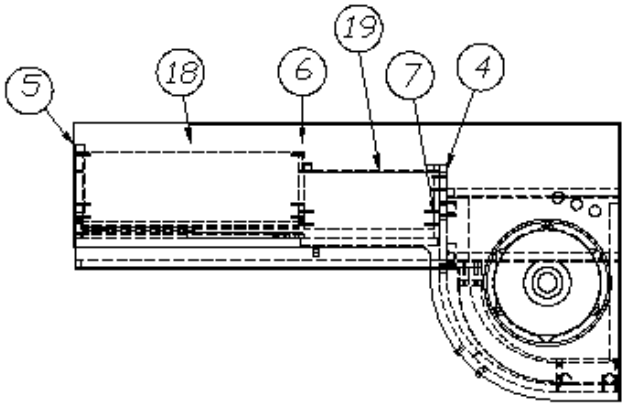

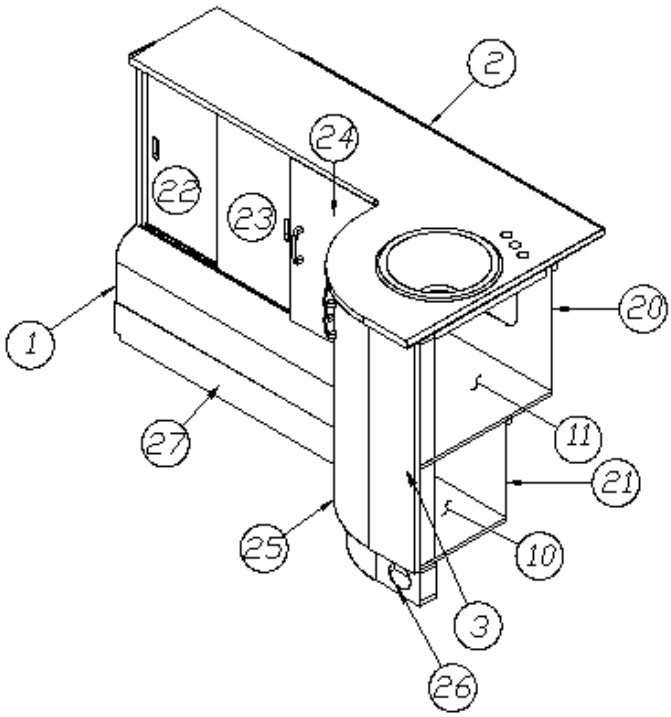

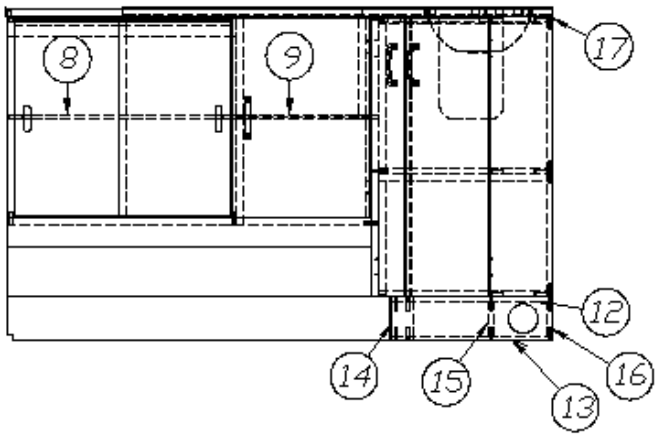

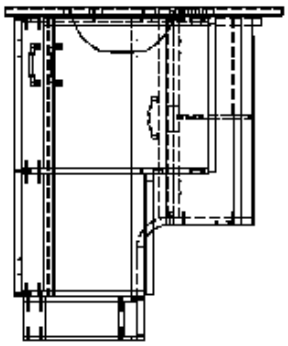

Parts Listed on Next Page

Lavatory Cabinet, 25’ Serenity

	967521-15	Lavatory Cabinet
1.	967522-15	Sub assembly, Lavy base
2.	967618-15	Lavy top
3.	967521-153	Panel, 6.44 x 28.5
4.	967521-154	Panel, 10.3 x 28.5
5.	967521-155	Panel, 9.5 x 20.5
6.	967521-156	Panel, 9.5 x 20.5
7.	967521-7	Panel, 7.55 x 20.5
8.	967521-8	Panel, 7.5 x 22.19
9.	967521-9	Panel, 4.49 x 13.25
10.	967521-10	Panel, 12.5 x 17.75
11.	967521-11	Panel, 19 x 17.75
12.	967521-12	Panel, 11.56 x 16.5
13.	967521-13	Panel, 11.56 x 16.5
14.	967521-14	Panel, 2.25 x 3.5
15.	967521-15I	Panel, 2.25 x 3.5
16.	967521-16	Panel, 2.25 x 3.5
17.	967521-21	Panel, 19 x 17.75
18.	967521-22	Panel, 23.44 x 19.25
19.	967521-23	Panel, 13.75 x 11
20.	967521-24	Panel, 16 x 17.75
21.	967521-25	Panel, 17.75 x 12.5
22.	967521-1526	Door, 11.34 x 20.13
23.	967521-1527	Door, 11.34 x 20.13
24.	967521-1528	Door, 13.88 x 20.25
25.	801788-0118	Door, 9.18 x 28.25, Asian Sand
26.	115438-03	Toe kick, 23.75”
27.	115438-04	Toe kick, 39.13”
	381607-10	Hinge, Self-close
	382115	Pull, Flat Black
	382030	Pull, Recessed finger
	381228-02	Catch, Grabber door (5lb Pull)
	115374	Extrusion, Sliding door track
	382057	Knockdown
	382057-04	Cap, Knockdown, White
	704041	Pile seal weather strip

2018 INTERNATIONAL
FURNITURE, LAVATORY

Lavatory Cabinet, Upper, 25’ Signature

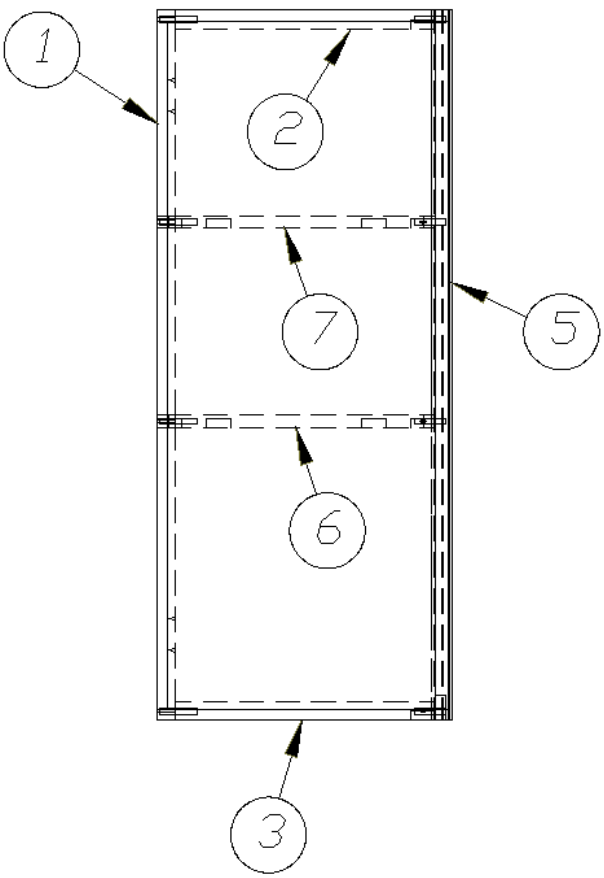

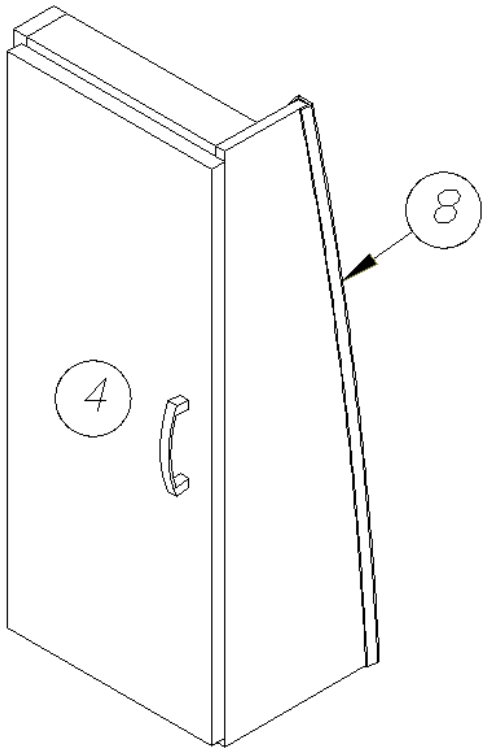

	967525	Upper Lavy Cabinet
1.	967525-1	Panel, 2.25 x 28.5
2.	967525-2	Panel, 2.25 x 10.5
3.	967525-3	Panel, 2.25 x 10.5
4.	967525-4	Panel, 11.31 x 27.63
5.	967525-5	Panel, 8.29 x 28.5
6.	967525-6	Panel, 11.25 x 7.13
7.	967525-7	Panel, 11.25 x 6
8.	203138-05	Extrusion, Plastic .5", Black
	967526	Upper shelf assembly
	382029-00	Handle bar
	381607-11	Hinge, Self-close
	381228-02	Catch, Grabber door (5lb Pull)
	382057-04	Cap, Knockdown, White

2018 INTERNATIONAL
FURNITURE, LAVATORY

Lavatory Cabinet, Upper, 25’ Serenity

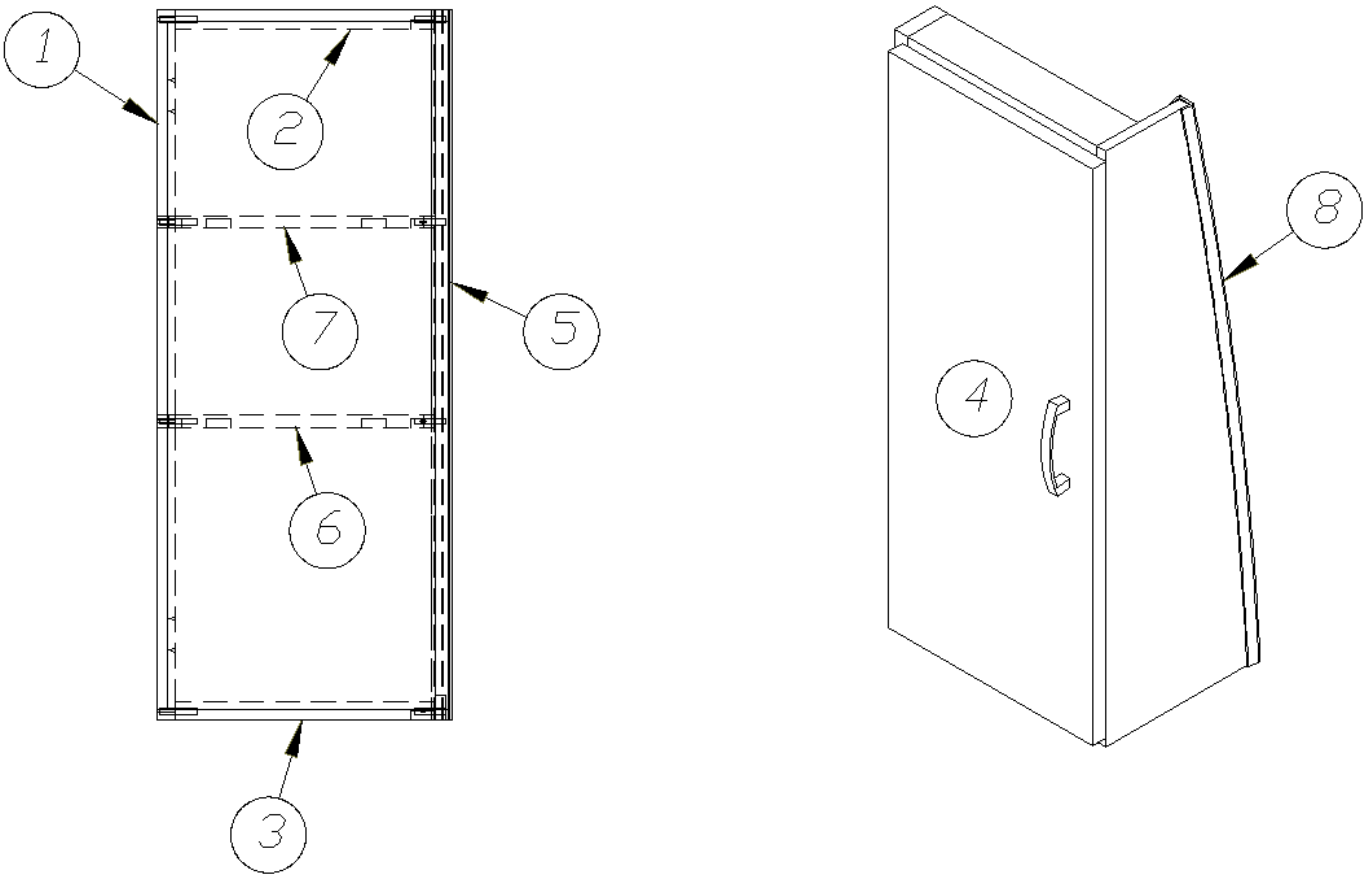

	967525-15	Upper Lavy Cabinet
1.	967525-1	Panel, 2.25 x 28.5
2.	967525-2	Panel, 2.25 x 10.5
3.	967525-3	Panel, 2.25 x 10.5
4.	967525-154	Panel, 11.31 x 27.63
5.	967525-155	Panel, 8.29 x 28.5
6.	967525-6	Panel, 11.25 x 7.13
7.	967525-7	Panel, 11.25 x 6
8.	203138-03	Extrusion, Plastic .5", Beige
	967526	Upper shelf assembly
	382115	Pull, Flat Black
	381607-11	Hinge, Self-close
	381228-02	Catch, Grabber door (5lb Pull)
	382057-04	Cap, Knockdown, White

2018 INTERNATIONAL
FURNITURE, LAVATORY

Lavatory Cabinet, 25FB Signature

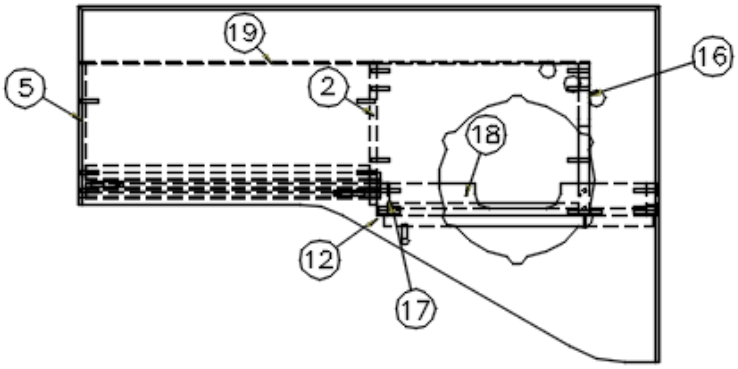

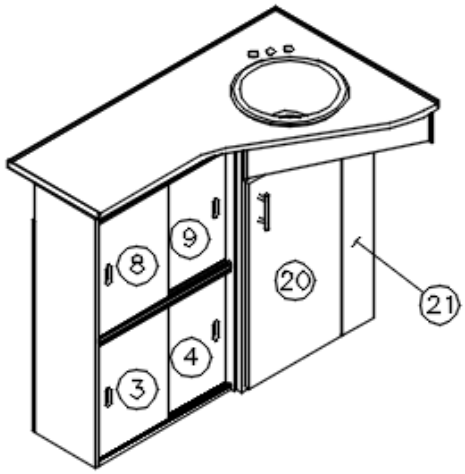

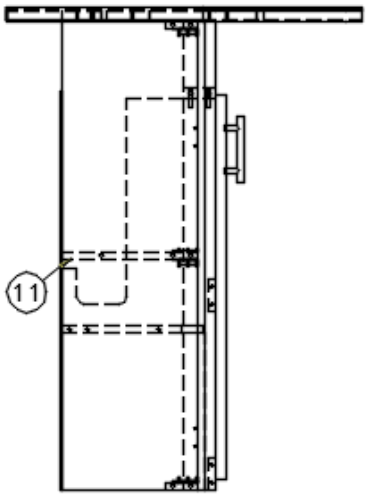

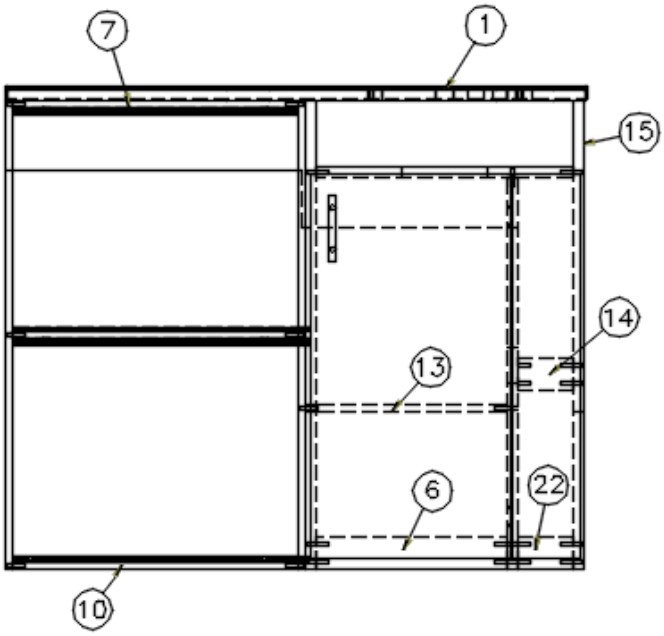

Parts Listed on Next Page

Lavatory Cabinet, 25FB Signature

	966902	Lavatory Cabinet
1.	966903	Lavatory top
2.	966902-2	Panel, 10 x 33
3.	966902-3	Panel, 10.81 x 15.38
4.	966902-4	Panel, 10.81 x 15.38
5.	966902-5	Panel, 9.5 x 33
6.	966902-6	Panel, 2.25 x 13.5
7.	966902-7	Panel, 2.25 x 20.12
8.	966902-8	Panel, 10.81 x 15.38
9.	966902-9	Panel, 10.81 x 15.38
10.	966902-10	Panel, 2.25 x 20.12
11.	966902-11	Panel, 9.5 x 20.13
12.	801706-0024	Corner trim, 90°, 1" radius, Ebony
13.	966902-13	Panel, 7.5 x 14.25
14.	966902-14	Panel, 2.25 x 4.12
15.	966902-15I	Panel, 2.25 x 33
16.	966902-16	Panel, 10.75 x 27.5
17.	966902-17	Panel, 2.25 x 33
18.	966902-18	Panel, 2.25 x 18.38
19.	966902-19	Panel, 28 x 36.12
20.	966902-23	Door, 14.13 x 27.13
21.	966902-31	Panel, 4.75 x 27.12
22.	966902-32	Panel, 2.25 x 3.94
	382030	Pull, Recessed finger
	382029-03	Handle bar
	381228-02	Catch, Grabber door (5lb Pull)
	115374	Extrusion, Sliding door track
	381607-11	Hinge, Self-close
	114070	Extrusion, J-trim, Aluminum

2018 INTERNATIONAL
FURNITURE, LAVATORY

Lavatory Cabinet, 25FB Serenity

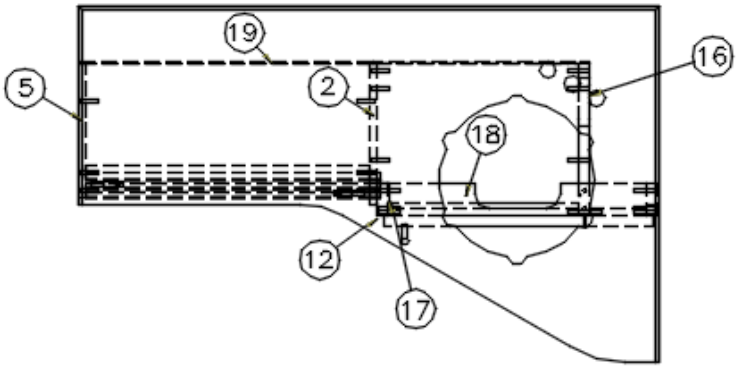

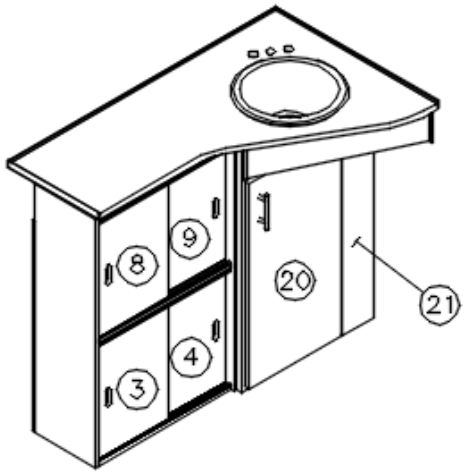

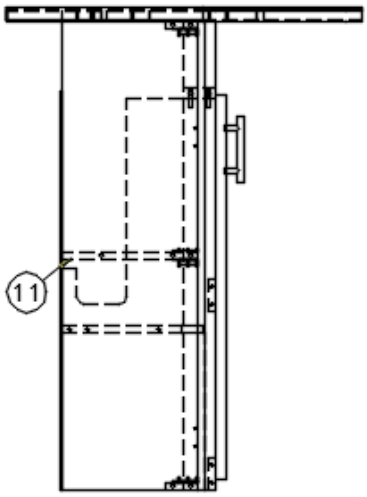

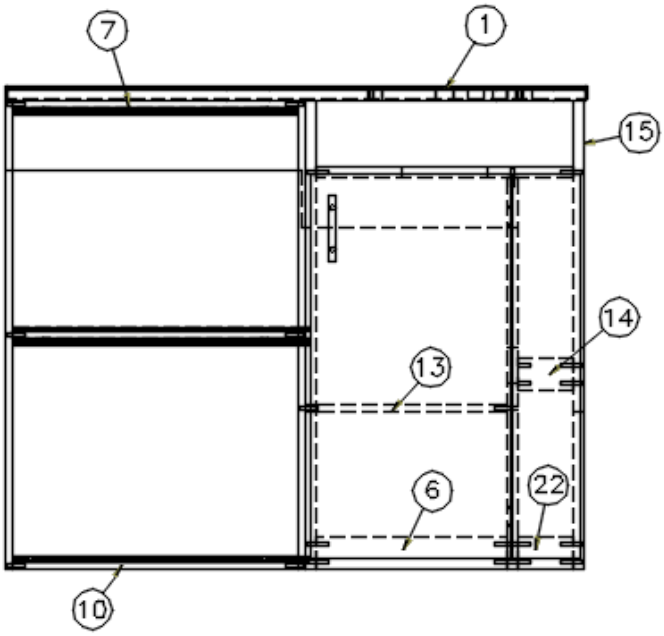

Parts Listed on Next Page

Lavatory Cabinet, 25FB Serenity

	966902-15	Lavatory Cabinet
1.	966903-15	Lavatory top
2.	966902-152	Panel, 10 x 33
3.	966902-153	Panel, 10.81 x 15.38
4.	966902-154	Panel, 10.81 x 15.38
5.	966902-155	Panel, 9.5 x 33
6.	966902-156	Panel, 2.25 x 13.5
7.	966902-7	Panel, 2.25 x 20.12
8.	966902-158	Panel, 10.81 x 15.38
9.	966902-159	Panel, 10.81 x 15.38
10.	966902-10	Panel, 2.25 x 20.12
11.	966902-11	Panel, 9.5 x 20.13
12.	801706-0018	Corner trim, 90°, 1" radius, Asian Sand
13.	966902-13	Panel, 7.5 x 14.25
14.	966902-14	Panel, 2.25 x 4.12
15.	966902-1515	Panel, 2.25 x 33
16.	966902-16	Panel, 10.75 x 27.5
17.	966902-17	Panel, 2.25 x 33
18.	966902-18	Panel, 2.25 x 18.38
19.	966902-1519	Panel, 28 x 36.12
20.	966902-1523	Door, 14.13 x 27.13
21.	966902-1531	Panel, 4.75 x 27.12
22.	966902-32	Panel, 2.25 x 3.94
	382030	Pull, Recessed finger
	382115	Pull, Flat Black
	381228-02	Catch, Grabber Door (5lb Pull)
	115374	Sliding door track
	381607-11	Hinge, Self-close

2018 INTERNATIONAL
FURNITURE, LAVATORY

Lavatory Cabinet, 27FB Signature

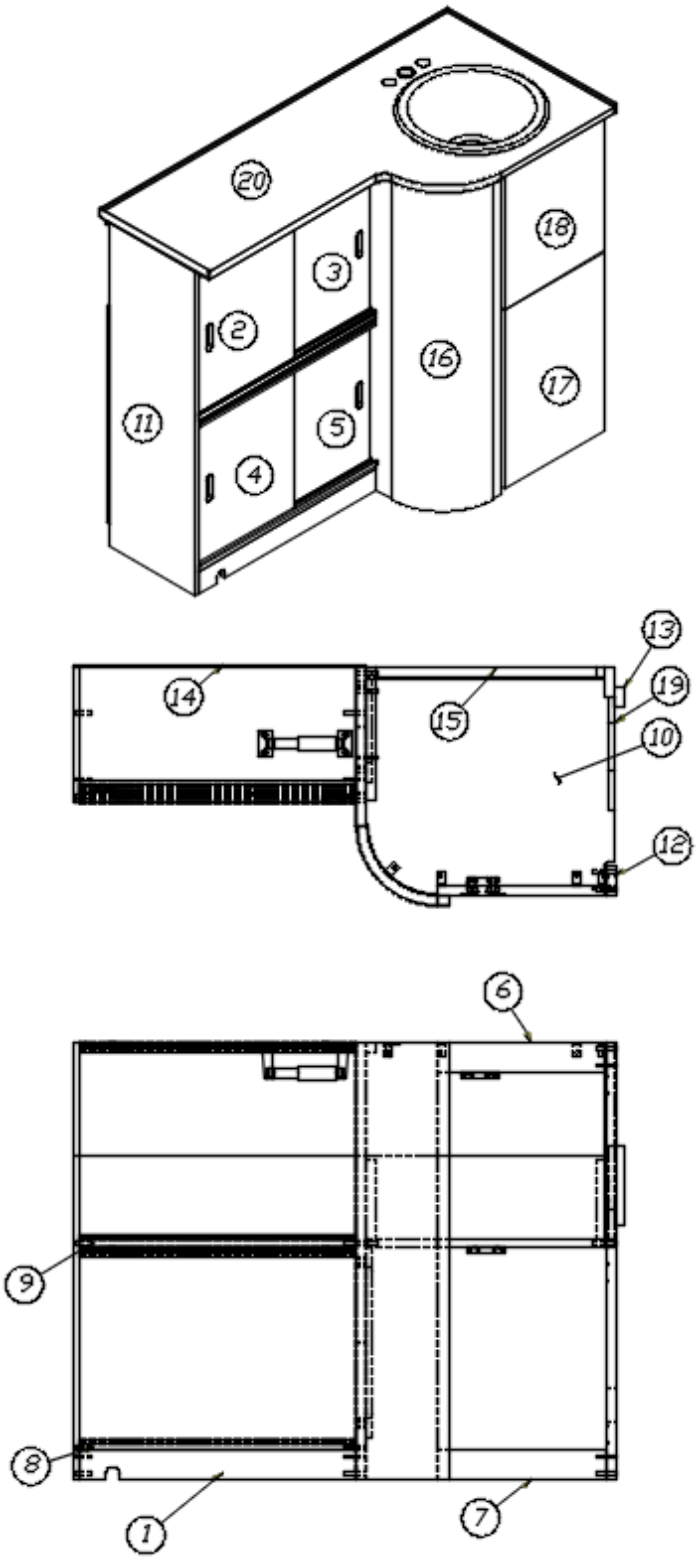

Parts Listed on Next Page

Lavatory Cabinet, 27FB Signature

	966884	Lavatory Cabinet
1.	966884-1	Panel, 20.85 x 2.25
2.	966884-02	Door, 11.25 x 14
3.	966884-03	Door, 11.25 x 14
4.	966884-04	Door, 11.25 x 14
5.	966884-05	Door, 11.25 x 14
6.	966884-6	Panel, 12.87 x 2.25
7.	966884-7	Panel, 12.87 x 2.25
8.	966884-8	Panel, 10.25 x 20.85
9.	966884-9	Panel, 10.25 x 20.85
10.	966884-10	Panel, 18.87 x 16.19
11.	966884-11	Panel, 10.25 x 33
12.	966884-12	Panel, 2.25 x 33
13.	966884-13	Panel, 2.25 x 14.87
14.	966884-14	Panel, 22.13 x 22.13
15.	966884-15I	Panel, 18.12 x 6.25
16.	966893	Radius sub assembly
17.	966884-17	Door, 11.87 x 16.69
18.	966884-18	Door, 11.87 x 12.31
19.	966884-31I	Panel, 7 x 8.5
20.	966885	Lavy top
	381228-02	Catch, Grabber door (5lb Pull)
	382029-00	Handle bar
	382030	Pull, Recessed finger
	115374	Sliding door track
	381607-11	Hinge, Self-close

2018 INTERNATIONAL
FURNITURE, LAVATORY

Lavatory Cabinet, 27FB Serenity

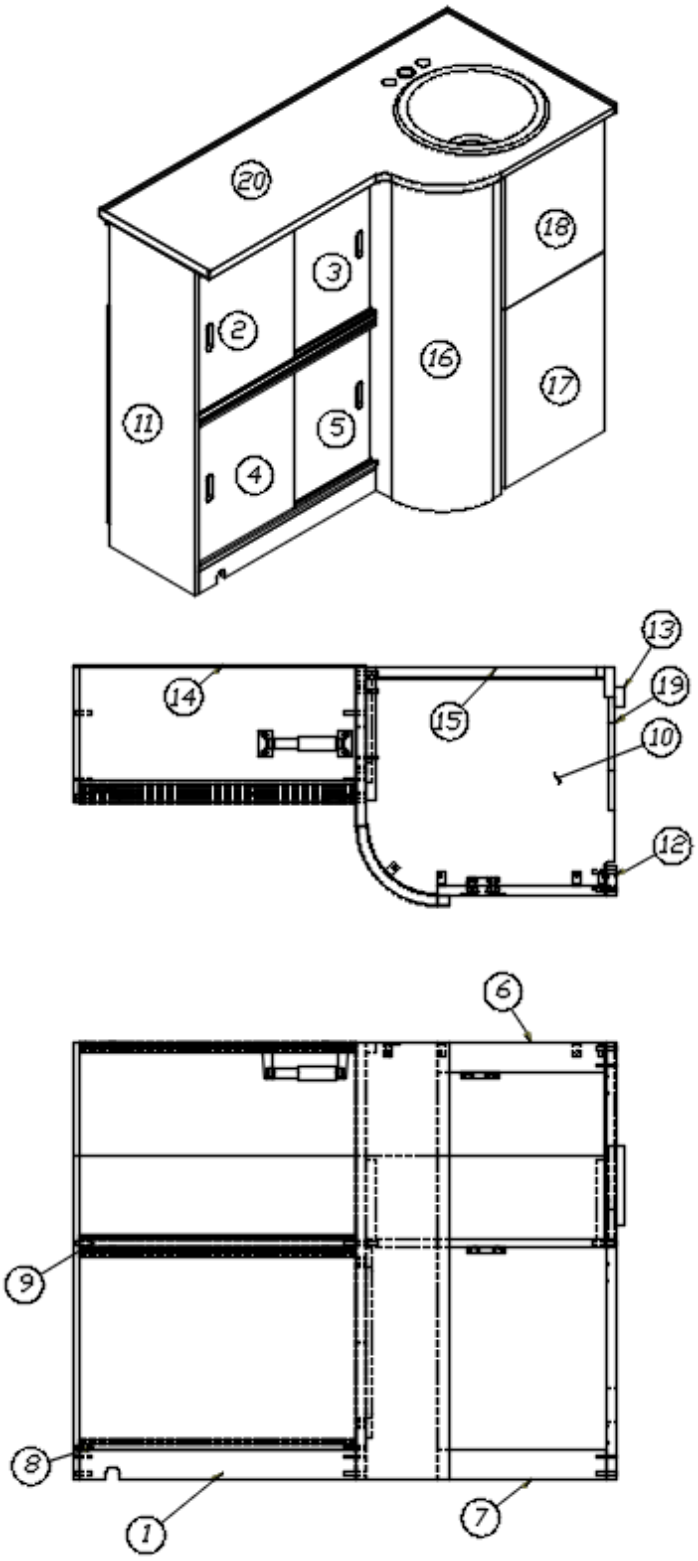

Parts Listed on Next Page

Lavatory Cabinet, 27FB Serenity

	966884-15	Lavatory Cabinet
1.	966884-151	Panel, 20.85 x 2.25
2.	966884-152	Door, 11.25 x 14.5
3.	966884-153	Door, 11.25 x 14.5
4.	966884-154	Door, 11.25 x 14.25
5.	966884-155	Door, 11.25 x 14.5
6.	966884-156	Panel, 12.87 x 2.25
7.	966884-157	Panel, 12.87 x 2.25
8.	966884-8	Panel, 10.25 x 20.85
9.	966884-9	Panel, 10.25 x 20.85
10.	966884-10	Panel, 18.87 x 16.19
11.	966884-11	Panel, 10.25 x 33
12.	966884-12	Panel, 2.25 x 33
13.	966884-13	Panel, 2.25 x 14.87
14.	966884-14	Panel, 22.13 x 22.13
15.	966884-1515	Panel, 18.12 x 6.25,
16.	966893-15	Radius sub assembly
17.	966884-1517	Door, 11.87 x 16.69
18.	966884-1518	Door, 11.87 x 12.31
19.	966884-31I	Panel, 7 x 8.5
20.	966885-15	Lavy top
	381228-02	Catch, Grabber door (5lb Pull)
	382115	Pull, Flat Black
	382030	Pull, Recessed finger
	115374	Extrusion, Sliding door track
	381607-11	Hinge, Self-close

2018 INTERNATIONAL
FURNITURE, LAVATORY

Lavatory Cabinet, 28’ A2GO, 28’ Signature

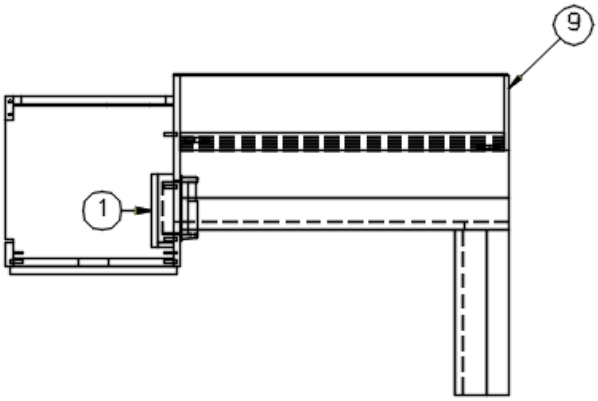

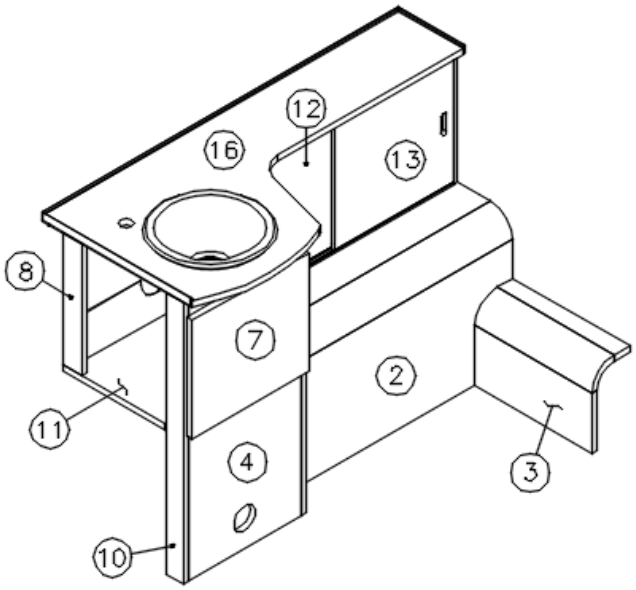

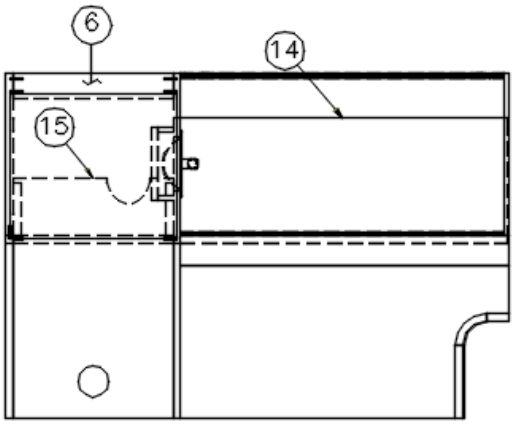

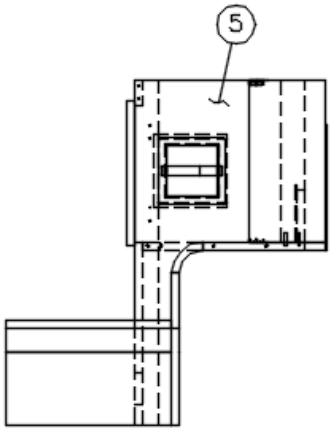

Parts Listed on Next Page

Lavatory Cabinet, 28’ A2GO, 28’ Signature

	967394	Lavatory Cabinet
	967394-23	Lavatory Cabinet, A2GO
1.	967006	Closeout, Paper holder
2.	966999	Lavy base closeout
3.	967002	Plumbing closeout
4.	967394-4	Panel, 15.25 x 17.5
5.	967394-5	Panel, 18.25 x 33
6.	967394-6	Panel, 2.25 x 15.25
7.	967394-7	Door, 15 x 13
8.	967394-8	Panel, 2.25 x 15.5
9.	967394-9	Panel, 7.25 x 15.5
10.	967394-10	Panel, 2.25 x 33
11.	967394-11	Panel, 16 x 15.5
12.	967394-12	Door, 16 x 15.13
13.	967394-13	Door, 16 x 15.13
14.	967394-14	Panel, 12 x 32.13
15.	967394-15I	Panel, 15.25 x 15.5
16.	966998	Lavy top
	115374	Extrusion, Sliding door track
	382030	Pull, Recessed finger
	381607-11	Hinge, Self-close
	381228-02	Catch, Grabber door (5lb Pull)
	381299	Holder recessed toilet paper
	382029-00	Handle bar
	114812	Aluminum angle, 1 x 1

2018 INTERNATIONAL
FURNITURE, LAVATORY

Lavatory Cabinet, 28’ Serenity

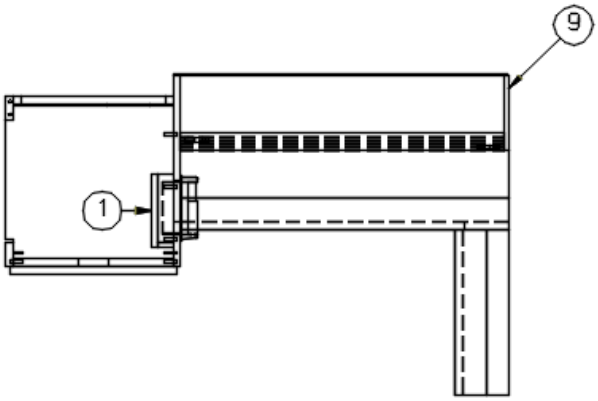

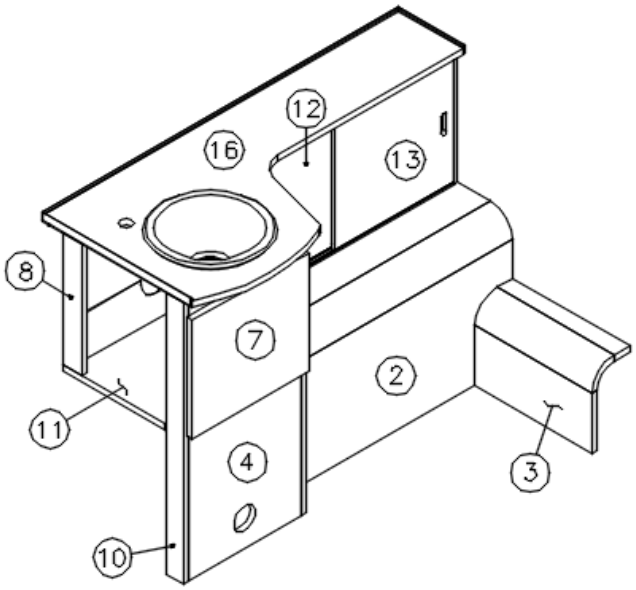

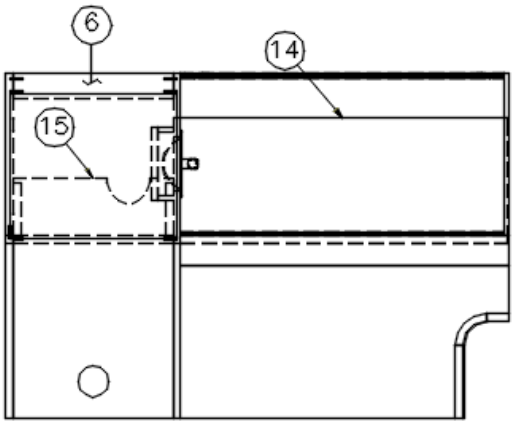

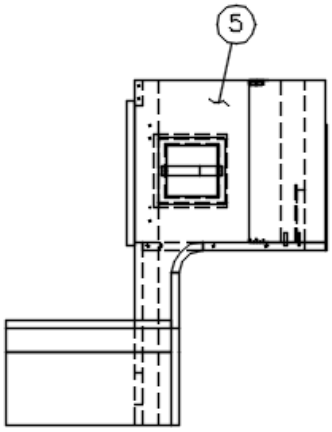

Parts Listed on Next Page

Lavatory Cabinet, 28’ Serenity

	967394-15	Lavatory Cabinet
1.	967006	Closeout, Paper holder
2.	966999-15	Lavy base closeout
3.	967002-15	Plumbing closeout
4.	967394-154	Panel, 15.25 x 17.5
5.	967394-155	Panel, 18.25 x 33
6.	967394-156	Panel, 2.5 x 15.25
7.	967394-157	Door, 15.88 x 13.63
8.	967394-8	Panel, 2.5 x 15.5
9.	967394-159	Panel, 2.5 x 15.5
10.	967394-10	Panel, 2.5 x 33
11.	967394-11	Panel, 16 x 15.5
12.	967394-1512	Panel, 15.5 x 31.5
13.	967394-1513	Door, 15.88 x 13.88
14.	967394-1514	Panel, 15.25 x 5.5
15.	967394-1515	Panel, 15.25 x 15.5
16.	966998-15	Lavy top
	115374	Extrusion, Sliding door track
	382030	Pull, Recessed finger
	381607-11	Hinge, Self-close
	381228-02	Catch, Grabber door (5lb Pull)
	381299	Holder recessed toilet paper
	382115	Pull, Flat Black
	114812	Aluminum angle, 1 x 1

2018 INTERNATIONAL
FURNITURE, LAVATORY

Lavatory Cabinet, 30’ Signature

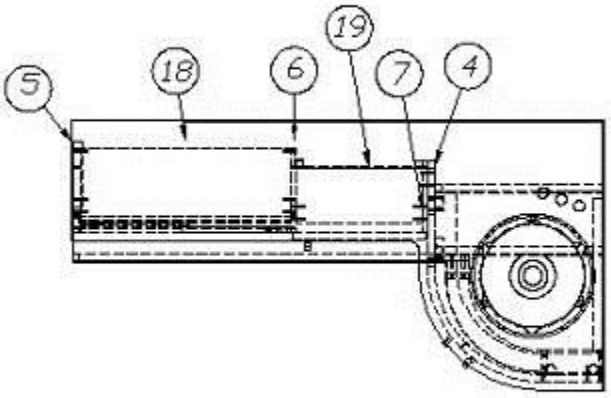

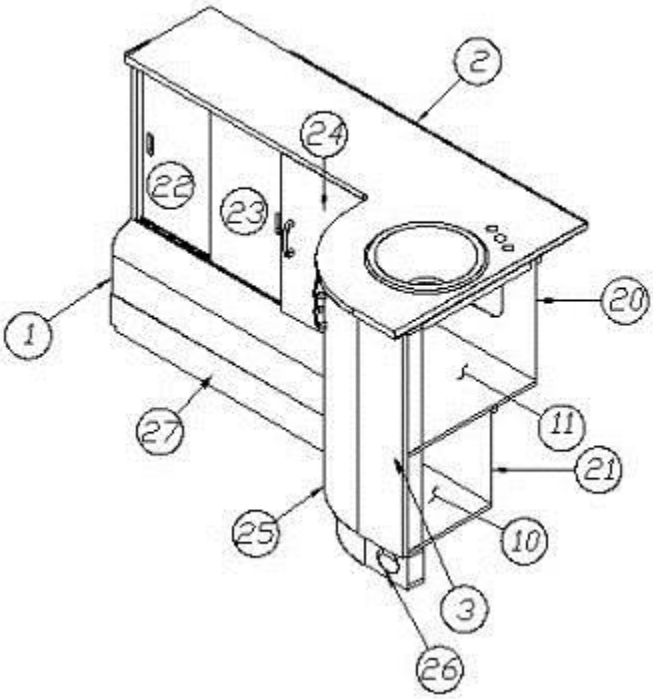

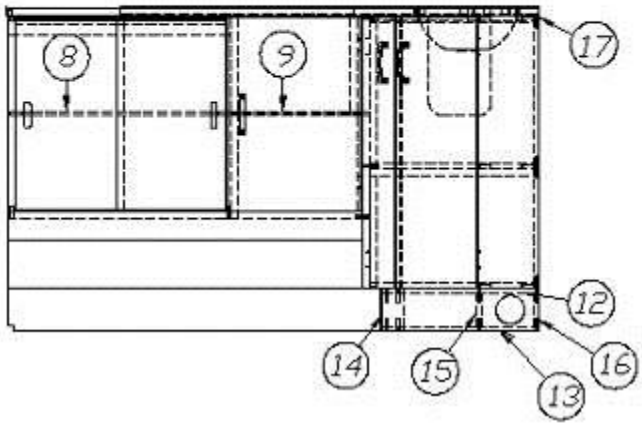

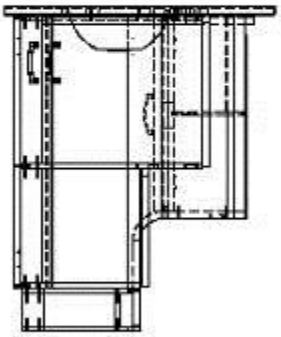

Parts Listed on Next Page

Lavatory Cabinet, 30’ Signature

	967521	Lavatory Cabinet
1.	967522	Lavy base sub assembly
2.	967618	Lavy top
3.	967521-3	Panel, 6.44 x 28.5
4.	967521-4	Panel, 10.3 x 28.5
5.	967521-5	Panel, 8.75 x 20.2
6.	967521-6	Panel, 8.75 x 20.5
7.	967521-7	Panel, 7.55 x 20.5
8.	967521-8	Panel, 7.05 x 22
9.	967521-9	Panel, 5.8 x 13.25
10.	967521-10	Panel, 12.5 x 17.75
11.	967521-11	Panel, 19 x 17.75
12.	967521-12	Panel, 11.56 x 16.5
13.	967521-13	Panel, 11.56 x 16.5
14.	967521-14	Panel, 2.25 x 3.5
15.	967521-15I	Panel, 2.25 x 3.5
16.	967521-16	Panel, 2.25 x 3.5
17.	967521-21	Panel, 19 x 17.75
18.	967521-22	Panel, 23.25 x 19.25
19.	967521-23	Panel, 13.75 x 11
20.	967521-24	Panel, 16 x 17.75
21.	967521-25	Panel, 17.63 x 12
22.	967521-26	Door, 11.34 x 20.13
23.	967521-27	Door, 11.34 x 20.13
24.	967521-28	Door, 13.88 x 20.25
25.	801788-0124	Door, 9.18 x 28.25, Ebony
26.	115438-03	Toe kick, 23.75”
27.	115438-04	Toe kick, 39.13”
	381607-10	Hinge, Self-close
	382030	Pull, Recessed finger
	382044	Handle, Brushed Nickel
	381228-02	Catch, Grabber door, (5lb Pull)
	115374	Extrusion, Sliding door track
	704041	Pile seal weather strip

2018 INTERNATIONAL
FURNITURE, LAVATORY

Lavatory Cabinet, 30’ Serenity

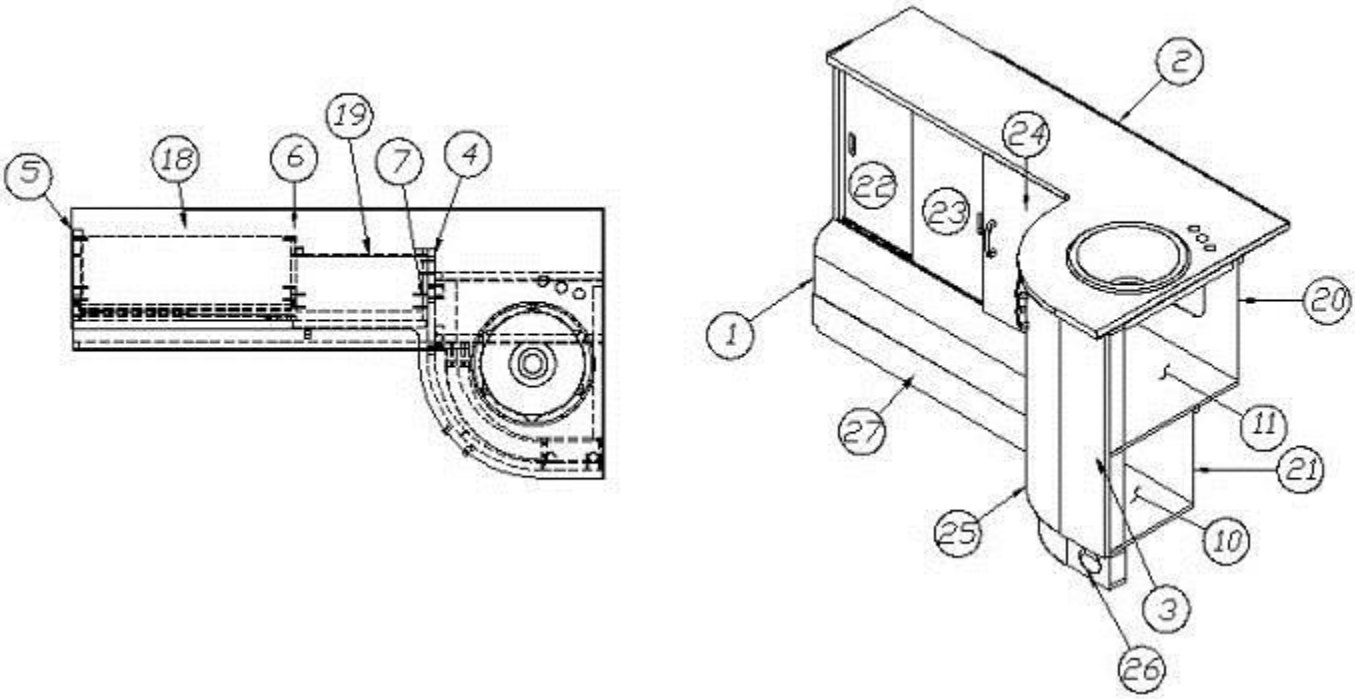

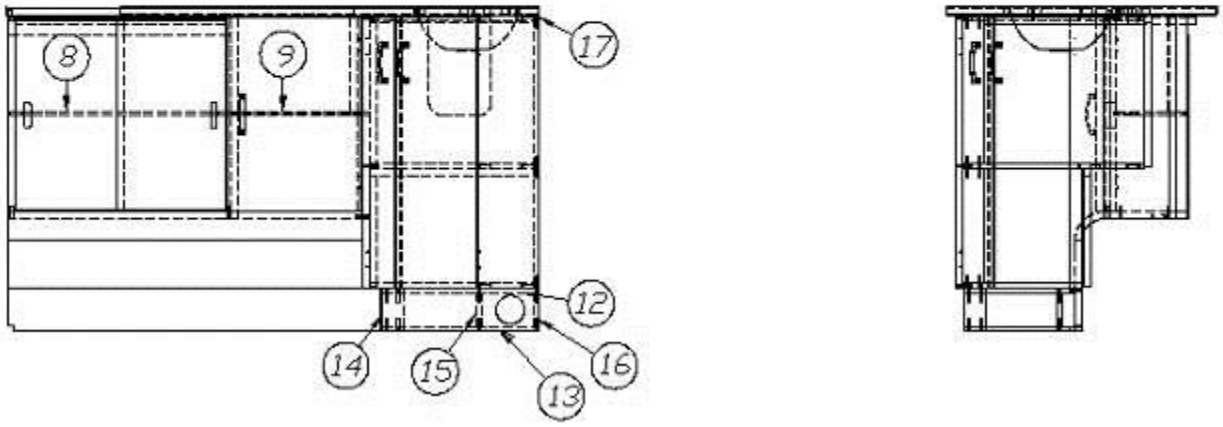

Parts Listed on Next Page

Lavatory Cabinet, 30’ Serenity

	967521-15	Lavatory Cabinet
1.	967522-15	Lavy base sub assembly
2.	967618-15	Lavy top
3.	967521-153	Panel, 6.44 x 28.5
4.	967521-154	Panel, 10.3 x 28.5
5.	967521-155	Panel, 9.5 x 20.5
6.	967521-156	Panel, 9.5 x 20.5
7.	967521-7	Panel, 7.55 x 20.5
8.	967521-8	Panel, 7.5 x 22.19
9.	967521-9	Panel, 4.49 x 13.25
10.	967521-10	Panel, 12.5 x 17.75
11.	967521-11	Panel, 19 x 17.75
12.	967521-12	Panel, 11.56 x 16.5
13.	967521-13	Panel, 11.56 x 16.5
14.	967521-14	Panel, 2.25 x 3.5
15.	967521-15I	Panel, 2.25 x 3.5
16.	967521-16	Panel, 2.25 x 3.5
17.	967521-21	Panel, 19 x 17.75
18.	967521-22	Panel, 23.44 x 19.25
19.	967521-23	Panel, 13.75 x 11
20.	967521-24	Panel, 16 x 17.75
21.	967521-25	Panel, 17.75 x 12.5
22.	967521-1526	Door, 11.34 x 20.13
23.	967521-1527	Door, 11.34 x 20.13
24.	967521-1528	Door, 13.88 x 20.25
25.	801788-0118	Door, 9.18 x 28.25, Asian Sand
26.	115438-03	Toe kick, 23.75”
27.	115438-04	Toe kick, 39.13”
	381607-10	Hinge, Self-close
	382115	Pull, Flat Black
	382030	Pull, Recessed finger
	381228-02	Catch, Grabber door (5lb Pull)
	115374	Extrusion, Sliding door track
	382057	Knockdown
	382057-04	Cap, Knockdown, White
	704041	Pile seal weather strip

2018 INTERNATIONAL
FURNITURE, LAVATORY

Lavatory Cabinet, Upper, 30’ Signature

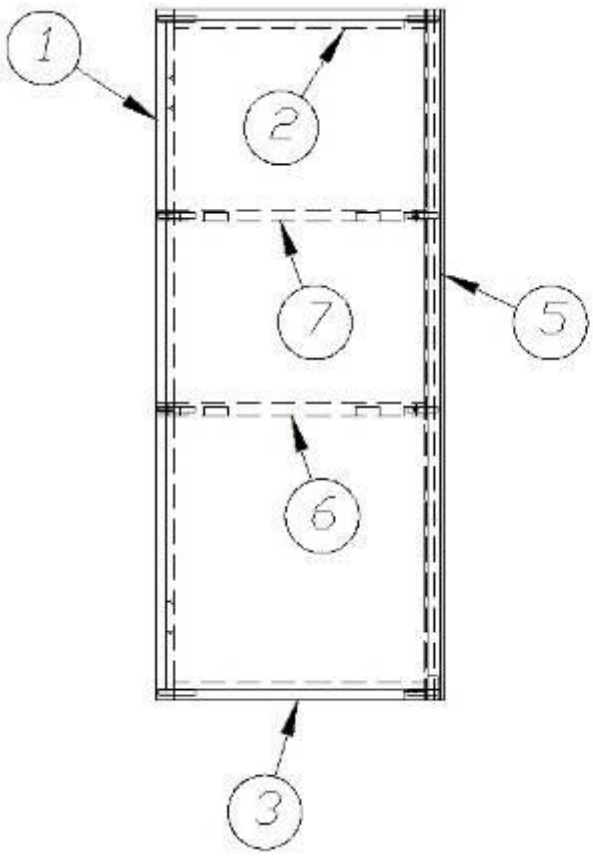

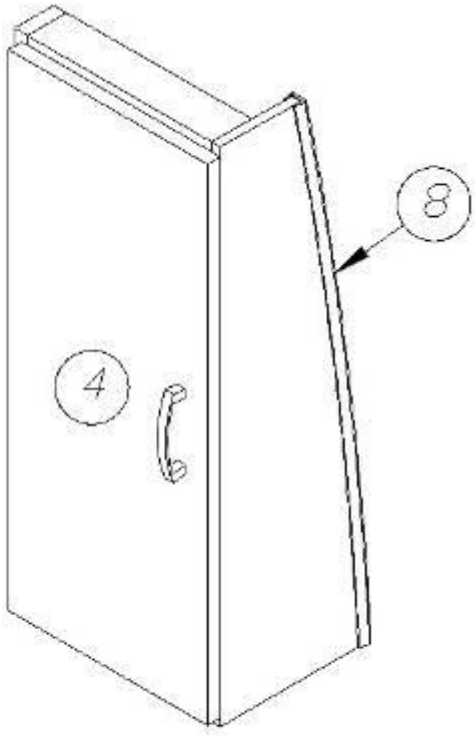

	967525	Upper Lavatory Cabinet
1.	967525-1	Panel, 2.25 x 28.5
2.	967525-2	Panel, 2.25 x 10.5
3.	967525-3	Panel, 2.25 x 10.5
4.	967525-4	Panel, 11.31 x 27.63
5.	967525-5	Panel, 8.29 x 28.5
6.	967525-6	Panel, 11.25 x 7.13
7.	967525-7	Panel, 11.25 x 6
8.	203138-05	Extrusion, Plastic .5”, Black
	967526	Upper lavy shelf assembly
	382029-00	Handle bar
	381607-11	Hinge, Self-close
	381228-02	Catch, Grabber door (5lb Pull)
	382057-04	Cap, Knockdown, White

Lavatory Cabinet, Upper, 30’ Serenity

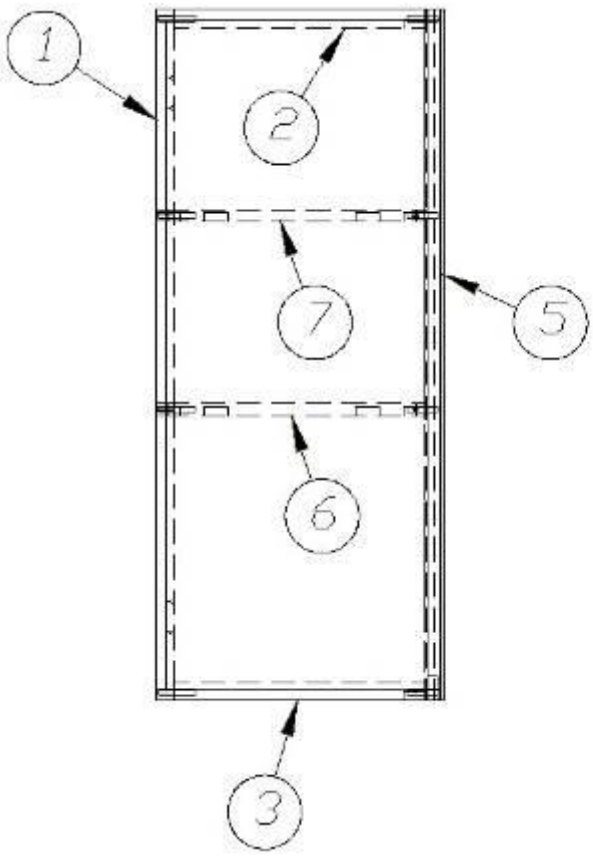

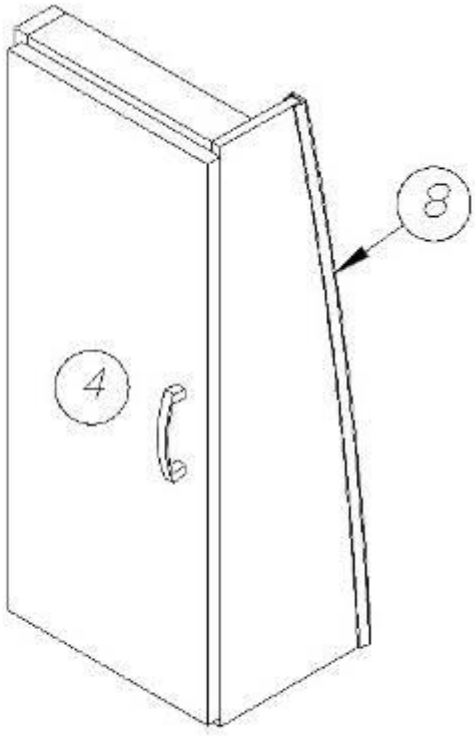

	967525-15	Upper Lavatory Cabinet
1.	967525-1	Panel, 2.25 x 28.5
2.	967525-2	Panel, 2.25 x 10.5
3.	967525-3	Panel, 2.25 x 10.5
4.	967525-154	Panel, 11.31 x 27.63
5.	967525-155	Panel, 8.29 x 28.5
6.	967525-6	Panel, 11.25 x 7.13
7.	967525-7	Panel, 11.25 x 6
8.	203138-03	Extrusion, Plastic .5", Beige
	967526	Upper lavy shelf assembly
	382115	Pull, Flat Black
	381607-11	Hinge, Self-close
	381228-02	Catch, Grabber door (5lb Pull)
	382057-04	Cap, Knockdown, White

2018 INTERNATIONAL
FURNITURE, LAVATORY

Wardrobe, Curbside, 23CB Signature

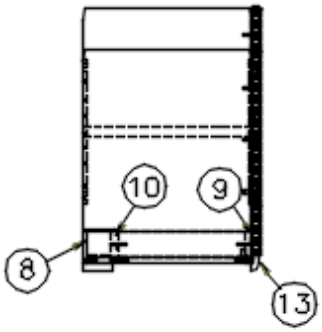

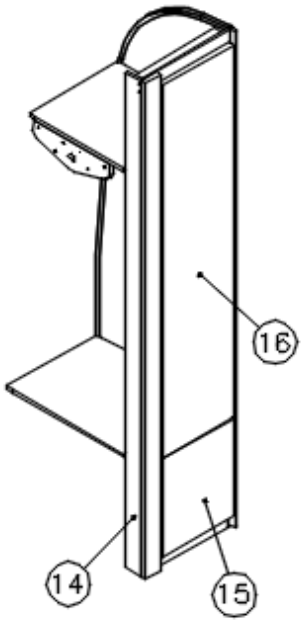

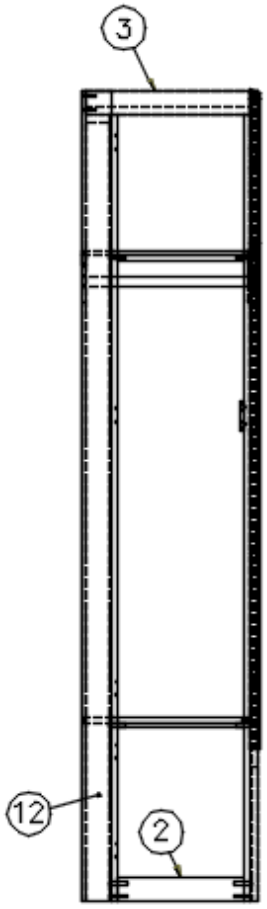

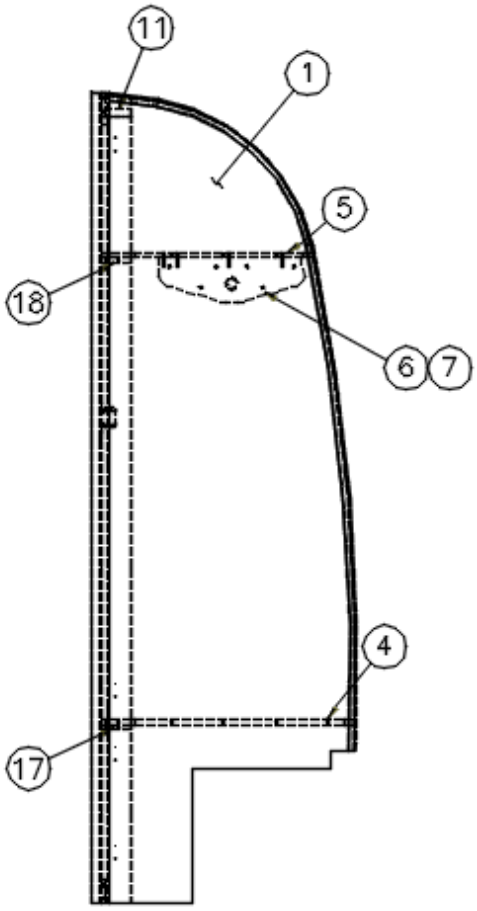

Parts Listed on Next Page

Wardrobe, Curbside, 23CB Signature

	966934	CS Wardrobe
1.	966934-1	Panel, 23.8 x 77.9
2.	966934-2	Panel, 12.315 x 2.25
3.	966934-3	Panel, 16 x 2.25
4.	966934-4	Panel, 16.5 x 24.47
5.	966934-5	Panel, 16.5 x 20.47
6.	966934-6	Panel, 4.48 x 14
7.	966934-7	Panel, 4.48 x 14
8.	966934-8	Panel, 3 x 78.14
9.	966934-9	Panel, 3 x 75.88
10.	966934-10	Panel, 3 x 75.88
11.	966934-11	Panel, 2.5 x 16
12.	966934-12	Panel, 2.18 x 12
13.	801706-0024	Corner trim, 90°, 1 radius, Ebony
14.	966934-15I	Panel, 2.88 x 78.14
15.	966934-16	Door, 12.94 x 15.5
16.	966934-17	Door, 12.94 x 58.63
17.	966934-30	Panel, 3 x 12.31
18.	966934-31	Panel, 3 x 12.31
	382029-03	Handle bar, 11.25"
	381607-11	Hinge, Self-close
	381228	Catch, Grabber door
	380045	Tubing, 3/4", Metallic
	200975-04	Conduit, Flexible Black plastic
	203138-05	Extrusion, Plastic, .5", Black

2018 INTERNATIONAL
FURNITURE, LAVATORY

Wardrobe, Curbside, 23CB Serenity

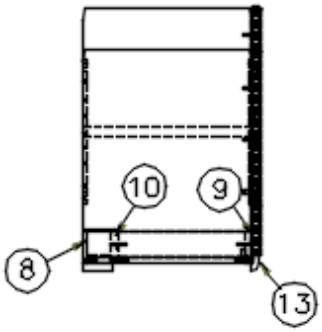

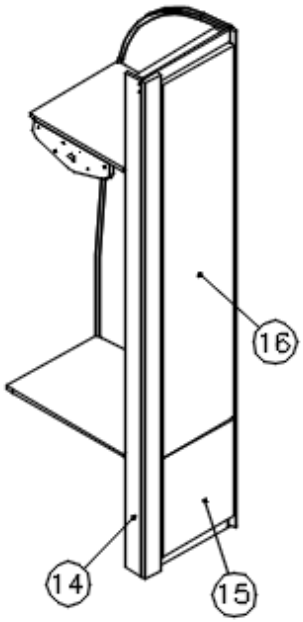

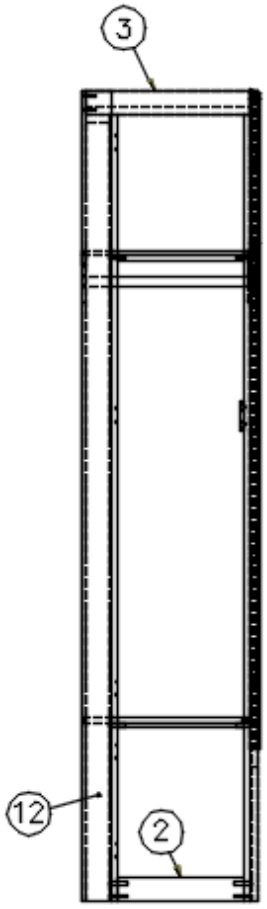

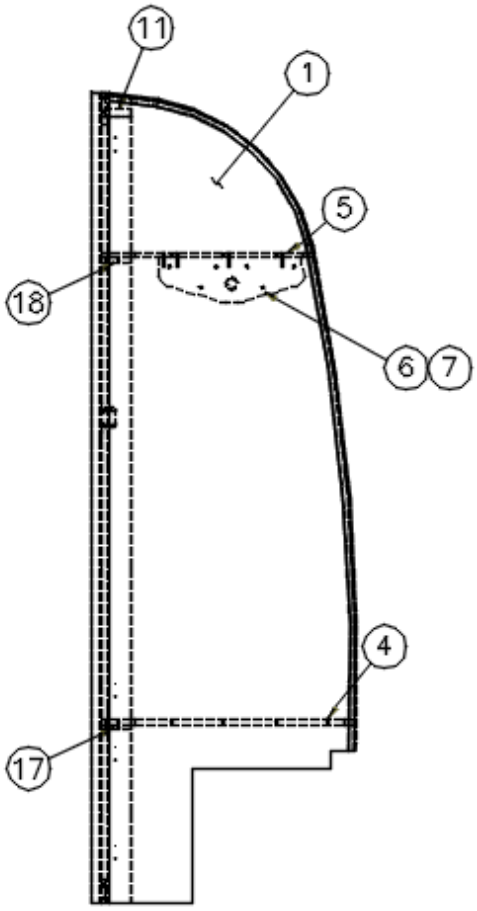

Parts Listed on Next Page

Wardrobe, Curbside, 23CB Serenity

	966934-15	CS Wardrobe
1.	966934-151	Panel, 23.8 x 77.9
2.	966934-152	Panel, 12.315 x 2.25
3.	966934-153	Panel, 16 x 2.25
4.	966934-4	Panel, 16.5 x 24.47
5.	966934-5	Panel, 16.5 x 20.47
6.	966934-6	Panel, 4.48 x 14
7.	966934-7	Panel, 4.48 x 14
8.	966934-158	Panel, 3 x 78.14
9.	966934-9	Panel, 3 x 75.88
10.	966934-10	Panel, 3 x 75.88
11.	966934-11	Panel, 2.5 x 16
12.	966934-12	Panel, 2.18 x 75
13.	801706-0018	Corner trim, 90°, 1" radius, Asian Sand
14.	966934-1515	Panel, 2.88 x 78.14
15.	966934-1516	Door, 12.94 x 15.5
16.	966934-1517	Door, 12.94 x 58.63
17.	966934-30	Panel, 3 x 12.31
18.	966934-31	Panel, 3 x 12.31
	382115	Pull, Flat Black
	381607-11	Hinge, Self-close
	381228	Catch, Grabber door
	380045	Tubing, 3/4", Metallic
	200975-04	Conduit, Black plastic
	203138-03	Extrusion, Plastic, ½”, Beige

2018 INTERNATIONAL
FURNITURE, LAVATORY

Wardrobe, 25’ Signature

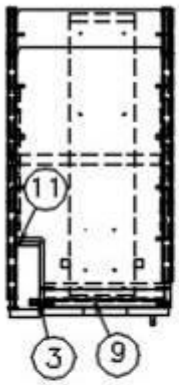

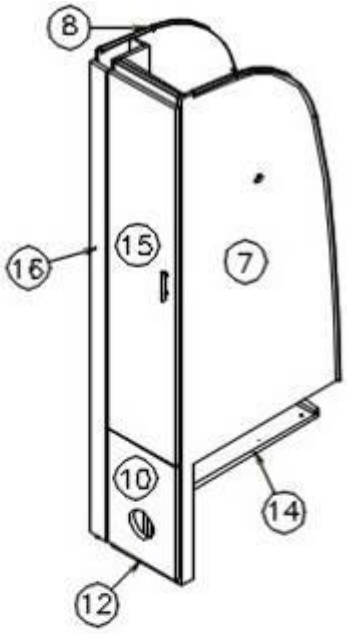

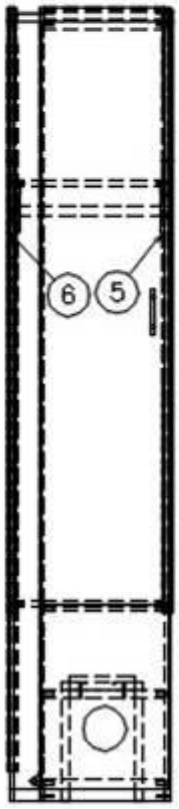

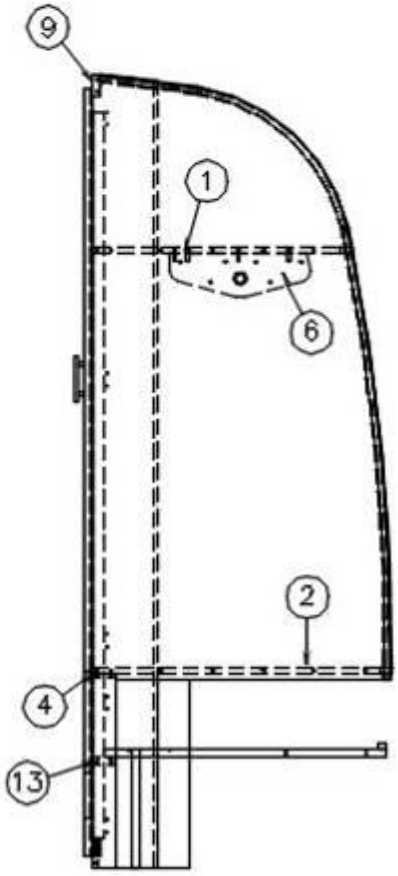

Parts Listed on Next Page

Wardrobe, 25’ Signature

	967738	Wardrobe
1.	967738-1	Panel, 14.88 x 25.72
2.	967738-2	Panel, 14.88 x 29.56
3.	967738-3	Panel, 6.5 x 78.74
4.	967738-4	Panel, 2.25 x 11.94
5.	967738-5	Panel, 4.49 x 14
6.	967738-6	Panel, 4.49 x 14
7.	967738-7	Panel, 29.44 x 78.74
8.	967738-8	Panel, 29.44 x 78.74
9.	967738-9	Panel, 2.25 x 11.94
10.	967738-10	Panel, 12.56 x 18.25
11.	967738-11	Panel, 2.44 x 788
12.	967738-12	Panel, 2.25 x 11.94
13.	967738-13	Panel, 2.25 x 11.94
14.	967738-14	Panel, 6.44 x 27
15.	967738-15I	Door, 12.56 x 57.81
16.	967738-16	Door, 36 x 76.19
	382029-05	Handle bar
	381607-11	Hinge, Self-close
	203445	Extrusion, Plastic, .5", Black
	104821	Support, Roof locker
	381847	Piano hinge, Angle
	381074	Bulldog latch
	381228-02	Catch, Grabber door (5lb Pull)
	380045	Tubing, .75", Elec. Metallic
	200975-04	Conduit, Flexible Black plastic

2018 INTERNATIONAL
FURNITURE, LAVATORY

Wardrobe, 25’ Serenity

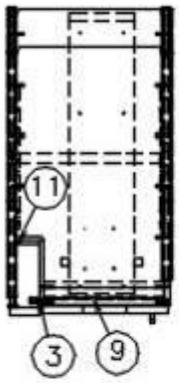

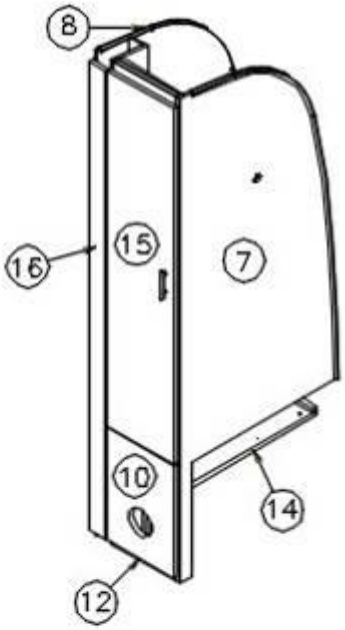

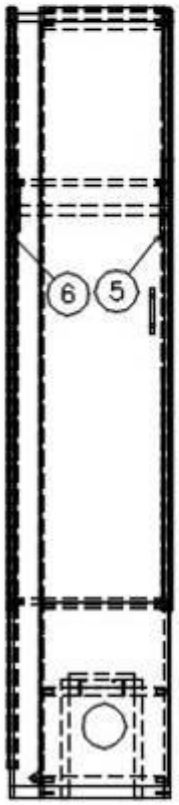

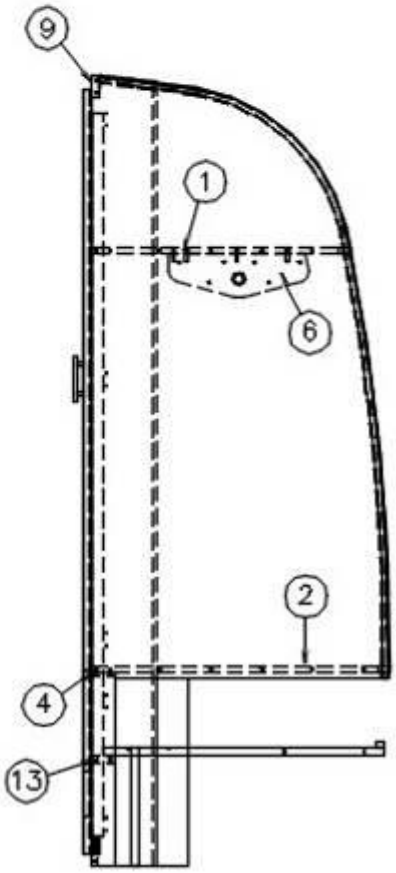

Parts Listed on Next Page

Wardrobe, 25’ Serenity

	967738-15	Wardrobe
1.	967738-1	Panel, 14.88 x 25.72
2.	967738-2	Panel, 14.88 x 29.56
3.	967738-3	Panel, 6.5 x 78.74
4.	967738-4	Panel, 2.25 x 11.94
5.	967738-5	Panel, 4.49 x 14
6.	967738-6	Panel, 4.49 x 14
7.	967738-7	Panel, 29.44 x 78.74
8.	967738-158	Panel, 29.44 x 78.74
9.	967738-159	Panel, 2.25 x 11.94
10.	967738-1510	Panel, 12.56 x 18.25
11.	967738-11	Panel, 2.44 x 788
12.	967738-1512	Panel, 2.25 x 11.94
13.	967738-13	Panel, 2.25 x 11.94
14.	967738-14	Panel, 6.44 x 27
15.	967738-1515	Panel, 12.56 x 57.81
16.	967738-1516	Panel, 36 x 76.19
	382029-05	Handle bar
	381607-11	Hinge, Self-close
	381228-02	Catch, Grabber door (5lb Pull)
	203138-03	Extrusion, Plastic, Beige
	104821	Support, Roof locker
	381847	Piano hinge, Angle
	381074	Bulldog latch
	380045	Tubing, .75", Elec. Metallic
	200975-04	Conduit, Flexible Black plastic
	966883-15	Wardrobe closeout

2018 INTERNATIONAL
FURNITURE, LAVATORY

Wardrobe, 25FB Signature

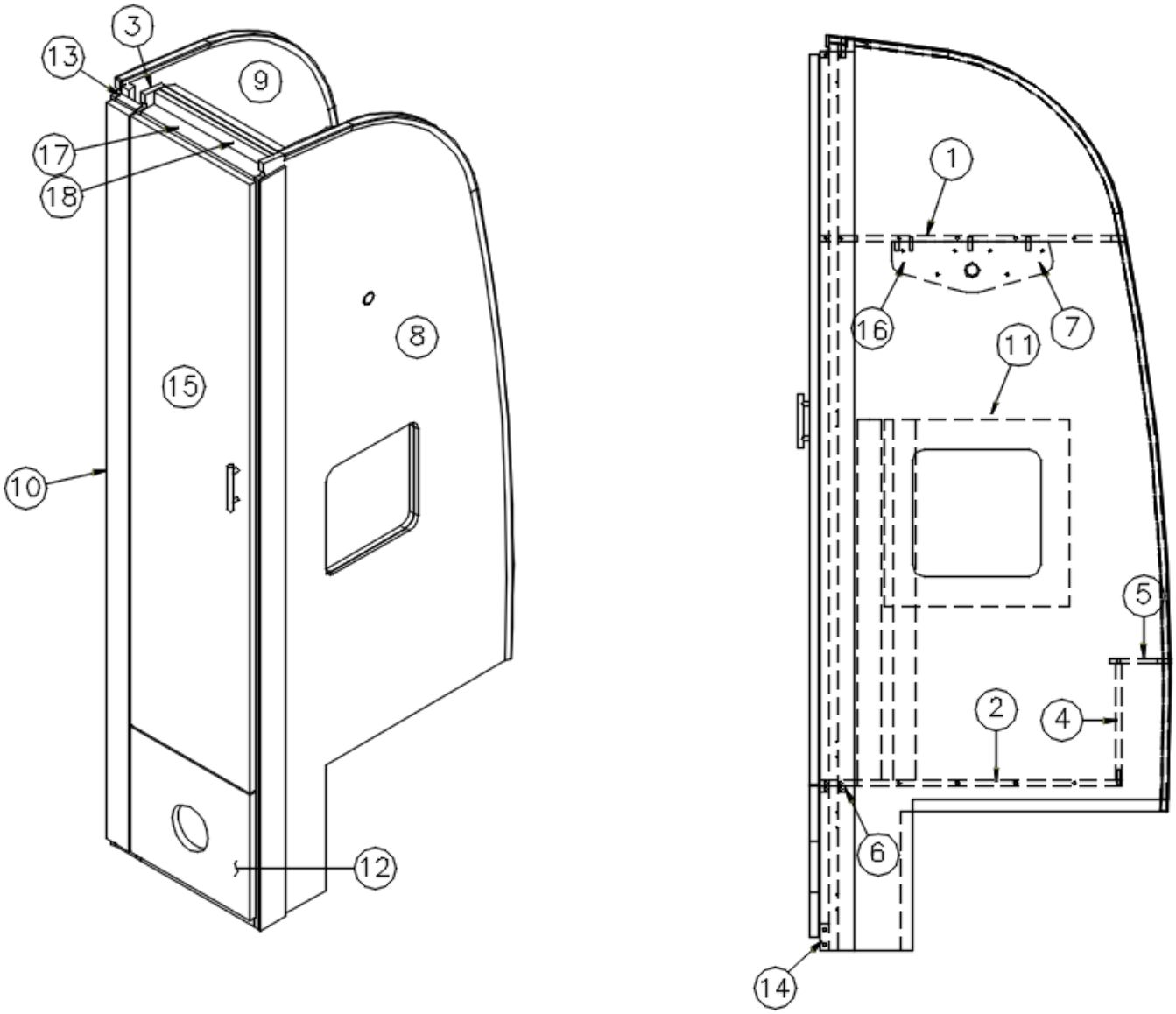

Parts Listed on Next Page

Wardrobe, 25FB Signature

	966905	Wardrobe
1.	966905-1	Panel, 16.56 x 26.5
2.	966905-2	Panel, 16.56 x 26
3.	966905-3	Panel, 3 x 78.88
4.	966905-4	Panel, 10 x 16.56
5.	966905-5	Panel, 5.25 x 16.56
6.	966905-6	Panel, 2.5 x 13.63
7.	966905-7	Panel, 4.5 x 14
8.	966905-8	Panel, 30.09 x 78.88
9.	966905-9	Panel 30.09 x 78.88
10.	966905-10	Panel, 2.69 x 75.88
11.	966883	Wardrobe closeout
12.	966905-12	Panel, 14.25 x 13
13.	966905-13	Panel, 2.44 x 78.88
14.	966905-14	Panel, 2.5 x 13.63
15.	966905-15I	Door, 14.25 x 62.75
16.	966905-30	Panel, 4.5 x 14
17.	966905-31	Panel, 13.625 x 2.25
18.	966905-32	Panel, 13.625 x 1.25
	203138-05	Extrusion, Plastic ½”, Black
	382029-03	Handle bar
	381228-02	Catch, Grabber door (5lb Pull)
	381607-11	Hinge, Self-close
	380045	Tubing, .75", Metal
	200975-04	Conduit, Flexible Black plastic
	380046	Flange, Chrome
	104821	Support, Roof locker

2018 INTERNATIONAL
FURNITURE, LAVATORY

Wardrobe, 25FB Serenity

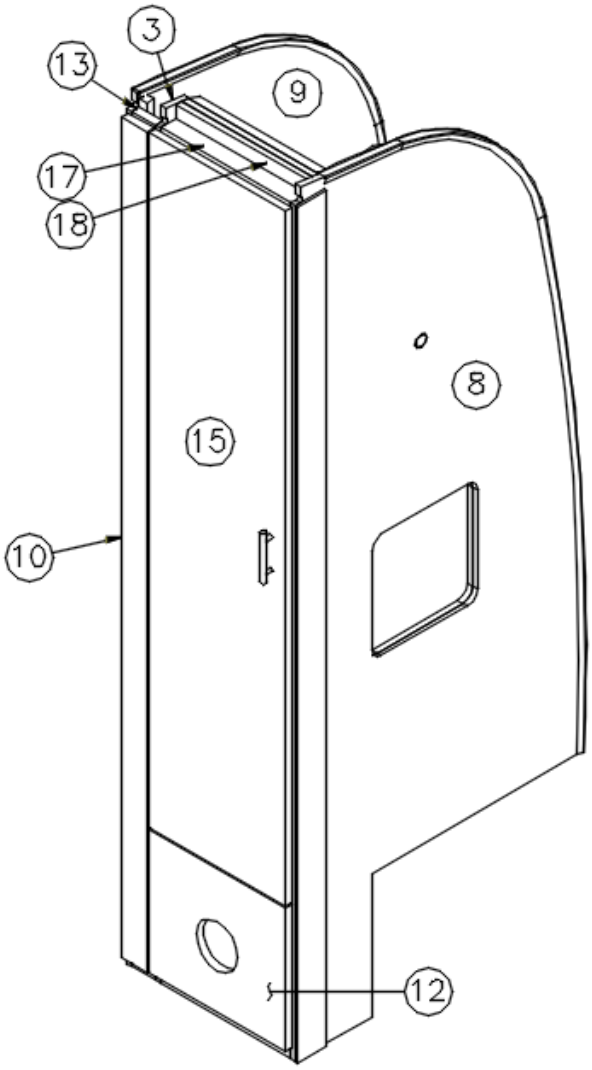

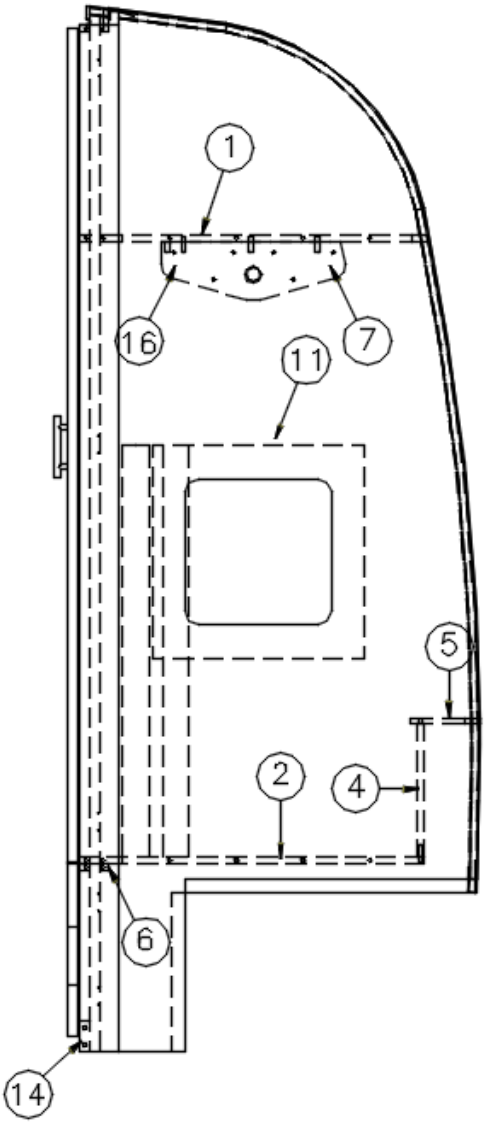

Parts Listed on Next Page

Wardrobe, 25FB Serenity

	966905-15	Wardrobe
1.	966905-1	Panel, 16.56 x 26.5
2.	966905-2	Panel, 16.56 x 26
3.	966905-3	Panel, 3 x 78.88
4.	966905-4	Panel, 10 x 16.56
5.	966905-5	Panel, 5.25 x 16.56
6.	966905-6	Panel, 2.25 x 13.63
7.	966905-7	Panel, 4.5 x 14
8.	966905-8	Panel, 30.09 x 78.88
9.	966905-9	Panel 30.09 x 78.88
10.	966905-1510	Panel, 2.69 x 76.19
11.	966883	Wardrobe closeout
12.	966905-1512	Panel, 14.25 x 13
13.	966905-1513	Panel, 2.44 x 78.88
14.	966905-1514	Panel, 2.5 x 13.63
15.	966905-1515	Door, 14.25 x 636
16.	966905-30	Panel, 4.5 x 14
17.	966905-1531	Panel, 13.625 x 2.25
18.	966905-1532	Panel, 13.625 x 1.25
	382115	Pull, Flat Black
	381228-02	Catch, Grabber door (5lb Pull)
	381607-11	Hinge, Self-close
	203138-03	Extrusion, Plastic, Beige
	380045	Tubing, .75", Metal
	200975-04	Conduit, Black plastic
	380046	Flange, Chrome
	104821	Support, Roof locker

2018 INTERNATIONAL
FURNITURE, LAVATORY

Wardrobe, Forward, 27FB Signature

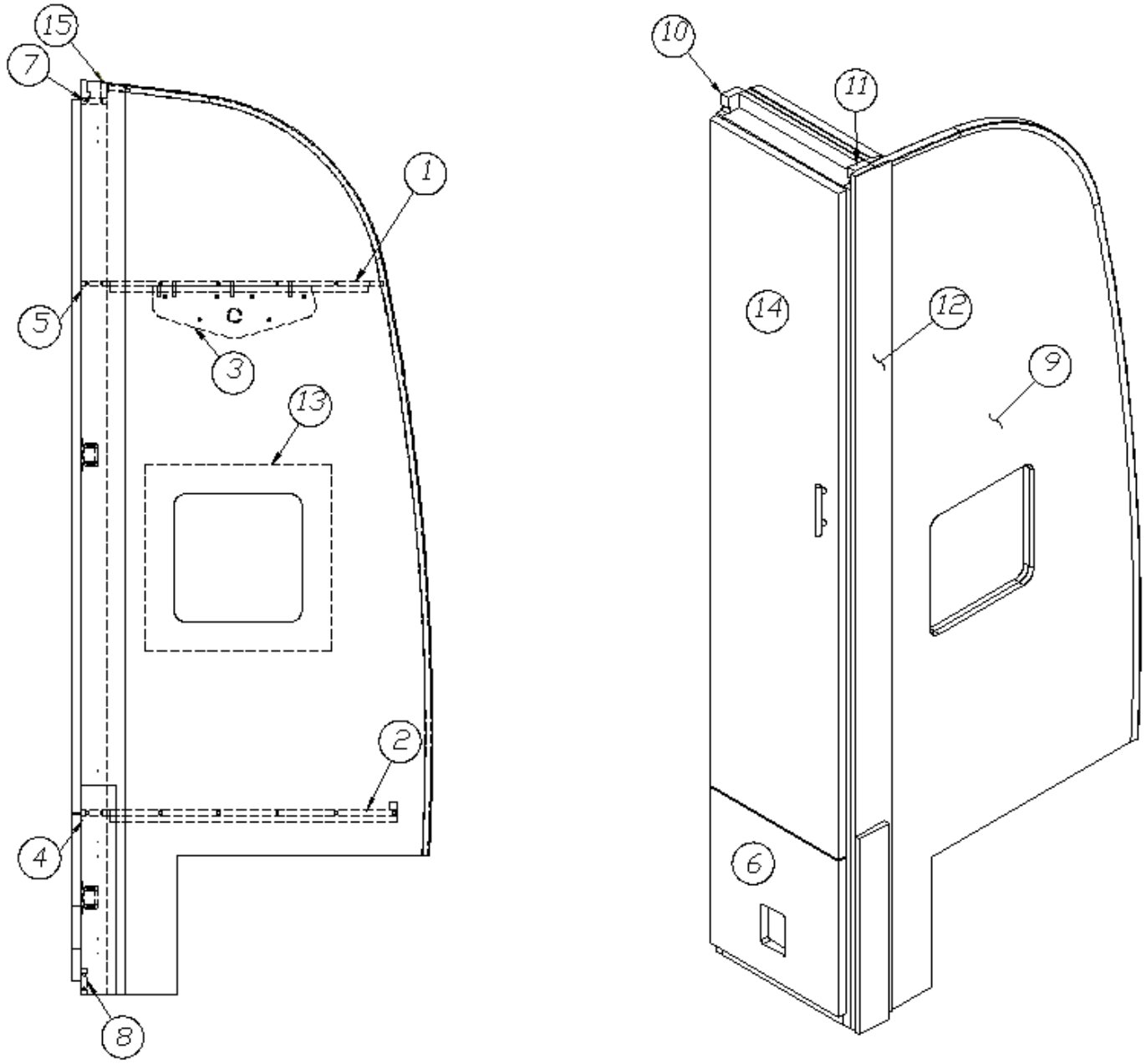

Parts Listed on Next Page

Wardrobe, Forward, 27FB Signature

	966880	Forward Wardrobe
1.	966880-1	Panel, 26 x 14.25
2.	966880-2	Panel, 27.25 x 14.25
3.	966880-3	Panel, 14 x 7
4.	966880-4	Panel, 2.25 x 24.75
5.	966880-5	Panel, 2.25 x 22.25
6.	966880-6	Door, 13.75 x 14.38
7.	966880-7	Panel, 12.75 x 2.25
8.	966880-8	Panel, 12.75 x 2.25
9.	966880-9	Panel, 30.11 x 78.74
10.	966880-10	Panel, 78.74 x 2.25
11.	966880-11	Panel, 78.74 x 2.25
12.	966880-12	Panel, 78.54 x 3.81
13.	966883	Wardrobe closeout
14.	966880-14	Door, 13.75 x 61.38
15.	966880-26	Panel, 1.25 x 12.75
	382029-03	Handle bar
	381228-02	Catch, Grabber door (5lb Pull)
	104821	Support, Roof locker
	203138-05	Extrusion, Plastic .5", Black
	381607-11	Hinge, Self-close
	365364-01	Edgebanding, .63”, Ebony
	365364-02	Edgebanding, .94”, Ebony

2018 INTERNATIONAL
FURNITURE, LAVATORY

Wardrobe, Forward, 27FB Serenity

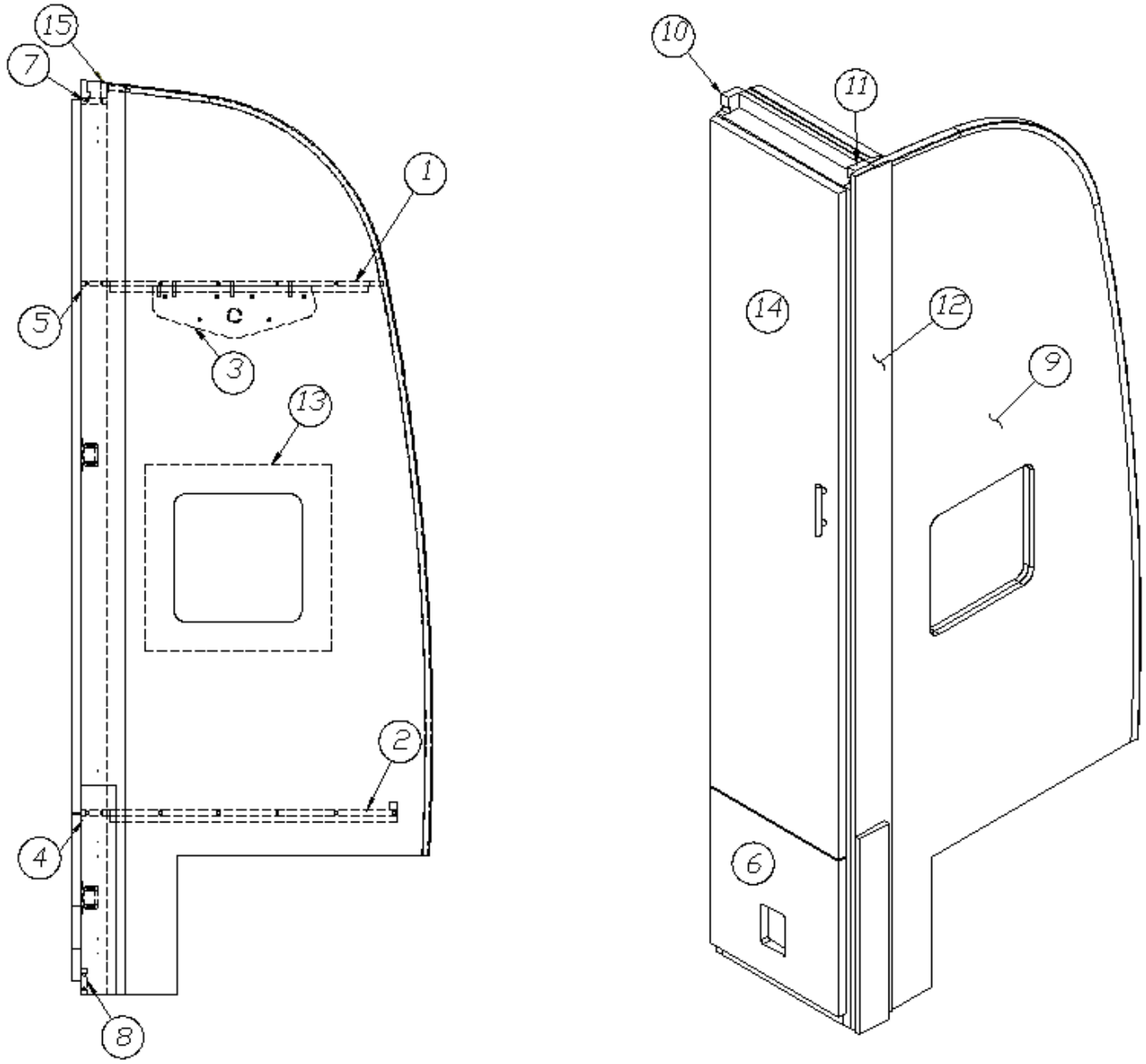

Parts Listed on Next Page

Wardrobe, Forward, 27FB Serenity

	966880-15	Forward Wardrobe
1.	966880-1	Panel, 26 x 14.25
2.	966880-2	Panel, 27.25 x 14.25
3.	966880-3	Panel, 14 x 7
4.	966880-4	Panel, 2.25 x 24.75
5.	966880-5	Panel, 2.25 x 22.25
6.	966880-156	Door, 13.75 x 14.38
7.	966880-157	Panel, 12.75 x 2.25
8.	966880-158	Panel, 12.75 x 2.25
9.	966880-9	Panel, 30.11 x 78.74
10.	966880-10	Panel, 78.74 x 2.25
11.	966880-11	Panel, 78.74 x 2.25
12.	966880-12	Panel, 78.54 x 3.81
13.	966883-15	Wardrobe closeout
14.	966880-1514	Door, 13.75 x 61.38
15.	966880-26	Panel, 1.25 x 12.75
	382115	Pull, Flat Black
	381228-02	Catch, Grabber door (5lb Pull)
	104821	Support, Roof locker
	203138-03	Extrusion, Plastic, Beige
	365340-01	Edgebanding .63”, Frosty White
	365344-01	Edgebanding, .63”, Pearl Bisque
	365344-02	Edgebanding, .94”, Pearl Bisque
	381607-11	Hinge, Self-close

2018 INTERNATIONAL
FURNITURE, LAVATORY

Wardrobe, Aft, 27FB Signature

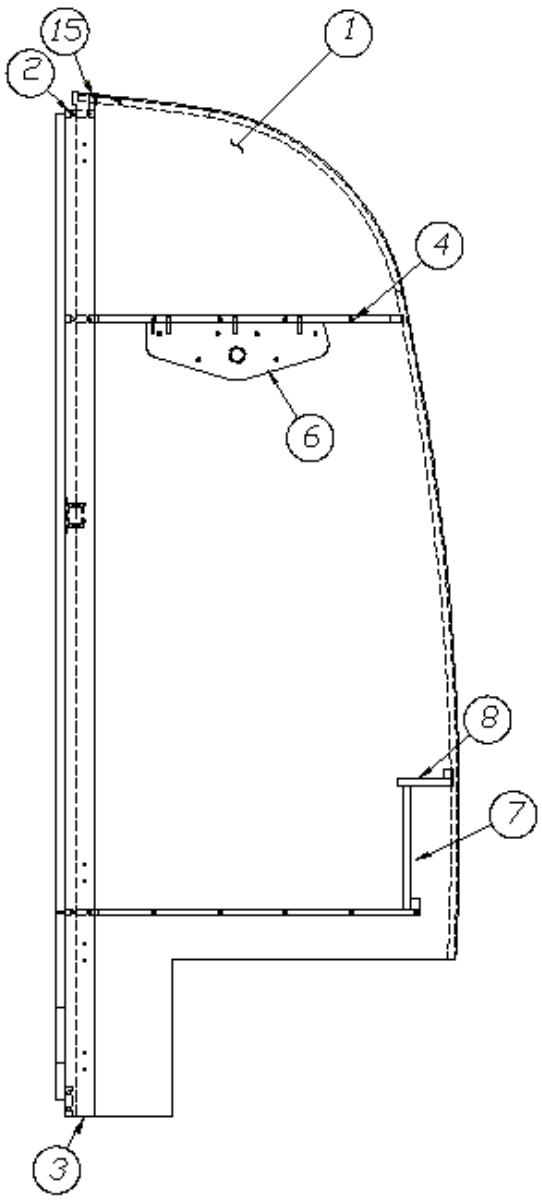

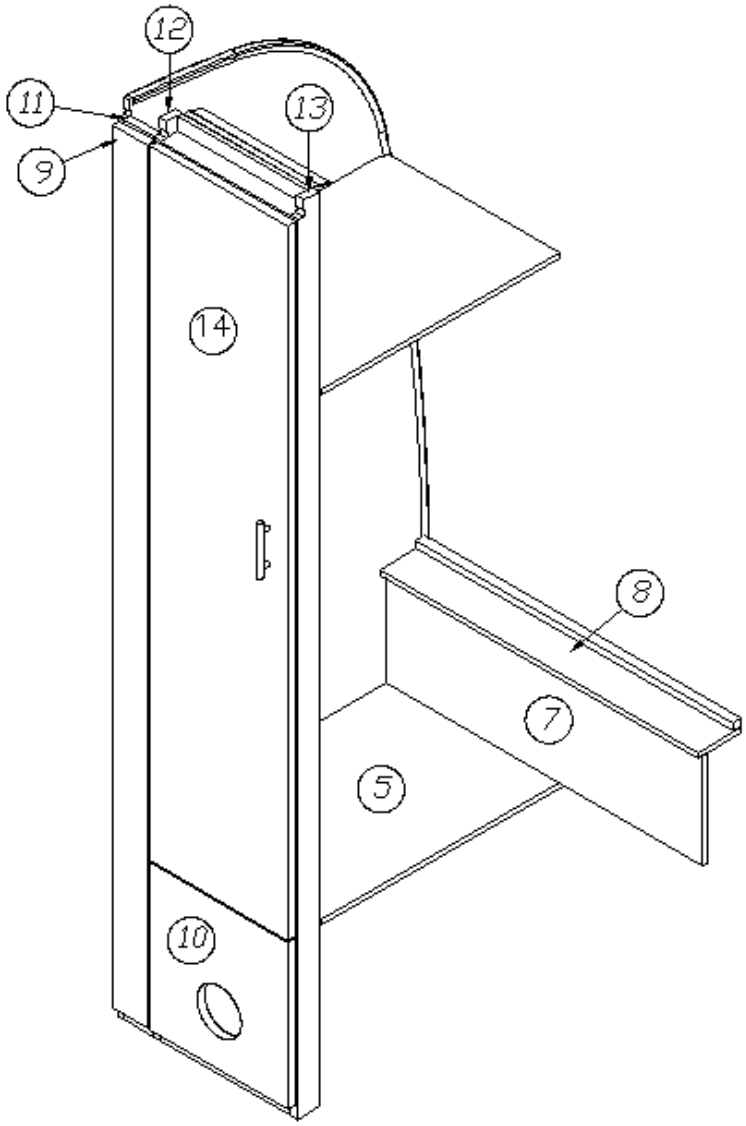

Parts Listed on Next Page

Wardrobe, Aft, 27FB Signature

	966881	Aft Wardrobe
1.	966881-1	Panel, 30.11 x 78.69
2.	966881-2	Panel, 12.75 x 2.25
3.	966881-3	Panel, 12.75 x 2.25
4.	966881-4	Panel, 26 x 17.19
5.	966881-5	Panel, 27.25 x 17.19
6.	966881-6	Panel, 14 x 7
7.	966881-7	Panel, 9.5 x 31.44
8.	966881-8	Panel, 4.31 x 31.44
9.	966881-9	Panel, 3.44 x 75.87
10.	966881-10	Panel, 13.75 x 14.38
11.	966881-11	Panel, 2.94 x 77.25
12.	966881-12	Panel, 78.69 x 2.25
13.	966881-13	Panel, 78.69 x 2.25
14.	966881-14	Door, 13.75 x 61.38
15.	966881-28	Panel, 1.25 x 12.75
	382029-03	Handle bar
	381228-02	Catch, Grabber door (5lb Pull)
	104821	Support, Roof locker
	203138-05	Extrusion, Plastic .5", Black
	381607-11	Hinge, Self-close
	380045	Tubing, ¾”
	200975-04	Conduit, Flexible Black plastic
	365364-01	Edgebanding, .63”, Ebony
	365364-02	Edgebanding, .94”, Ebony

2018 INTERNATIONAL
FURNITURE, LAVATORY

Wardrobe, Aft, 27FB Serenity

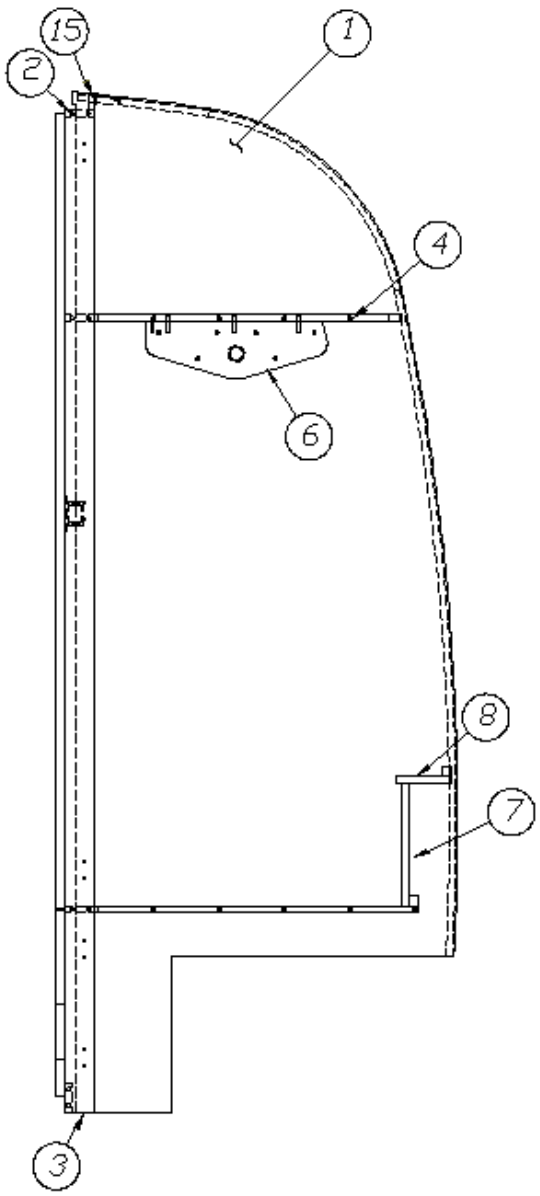

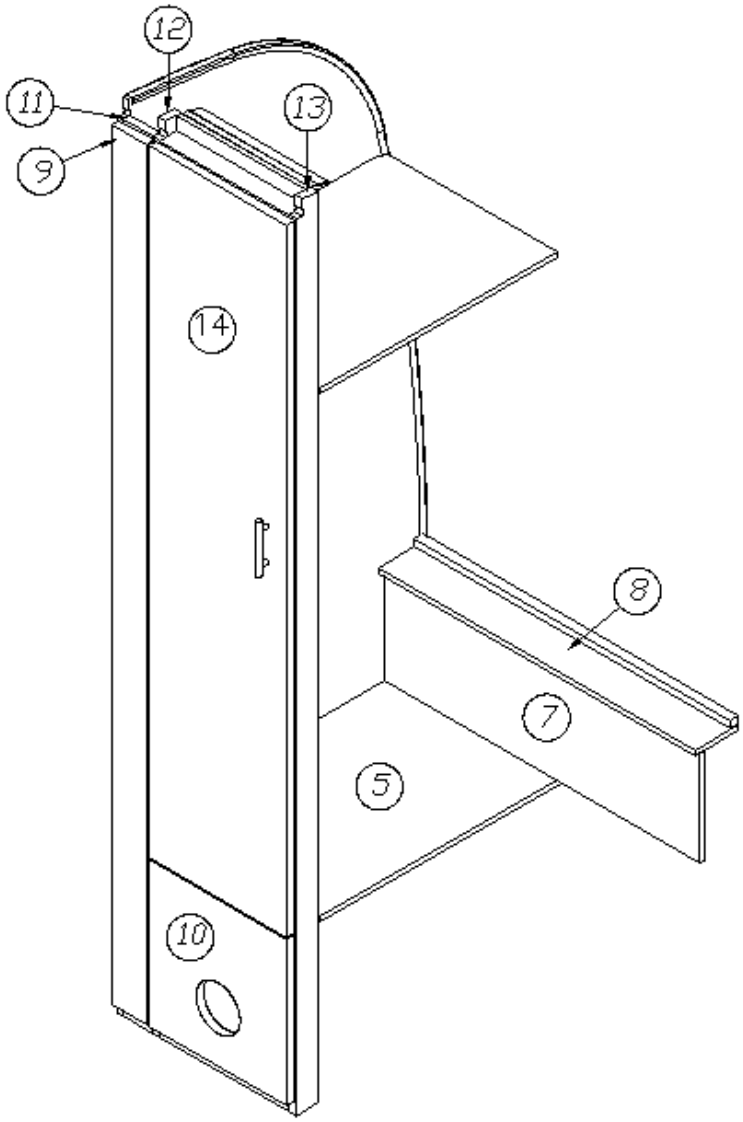

Parts Listed on Next Page

Wardrobe, Aft, 27FB Serenity

	966881-15	Aft Wardrobe
1.	966881-1	Panel, 78.69 x 30.11
2.	966881-152	Panel, 12.75 x 2.25
3.	966881-153	Panel, 12.75 x 2.25
4.	966881-4	Panel, 26 x 17.19
5.	966881-5	Panel, 27.25 x 17.19
6.	966881-6	Panel, 14 x 7
7.	966881-7	Panel, 9.5 x 31.44
8.	966881-8	Panel, 4.31 x 31.44
9.	966881-159	Panel, 3.44 x 75.87
10.	966881-1510	Panel, 13.75 x 14.38
11.	966881-1511	Panel, 2.94 x 77.25
12.	966881-12	Panel, 78.69 x 2.25
13.	966881-13	Panel, 78.69 x 2.25
14.	966881-1514	Door, 13.75 x 61.38
15.	966881-1528	Panel, 1.25 x 12.75
	382115	Pull, Flat Black
	381228-02	Catch, Grabber door (5lb Pull)
	104821	Support, Roof locker
	203138-03	Extrusion, Plastic, Beige
	381607-11	Hinge, Self-close
	380045	Tubing, ¾”
	200975-04	Conduit, Flexible Black plastic
	365344-02	Edgebanding, .94”, Pearl Bisque
	365344-01	Edgebanding, .63”, Pearl Bisque

2018 INTERNATIONAL
FURNITURE, LAVATORY

Wardrobe, Roadside, 28' Signature

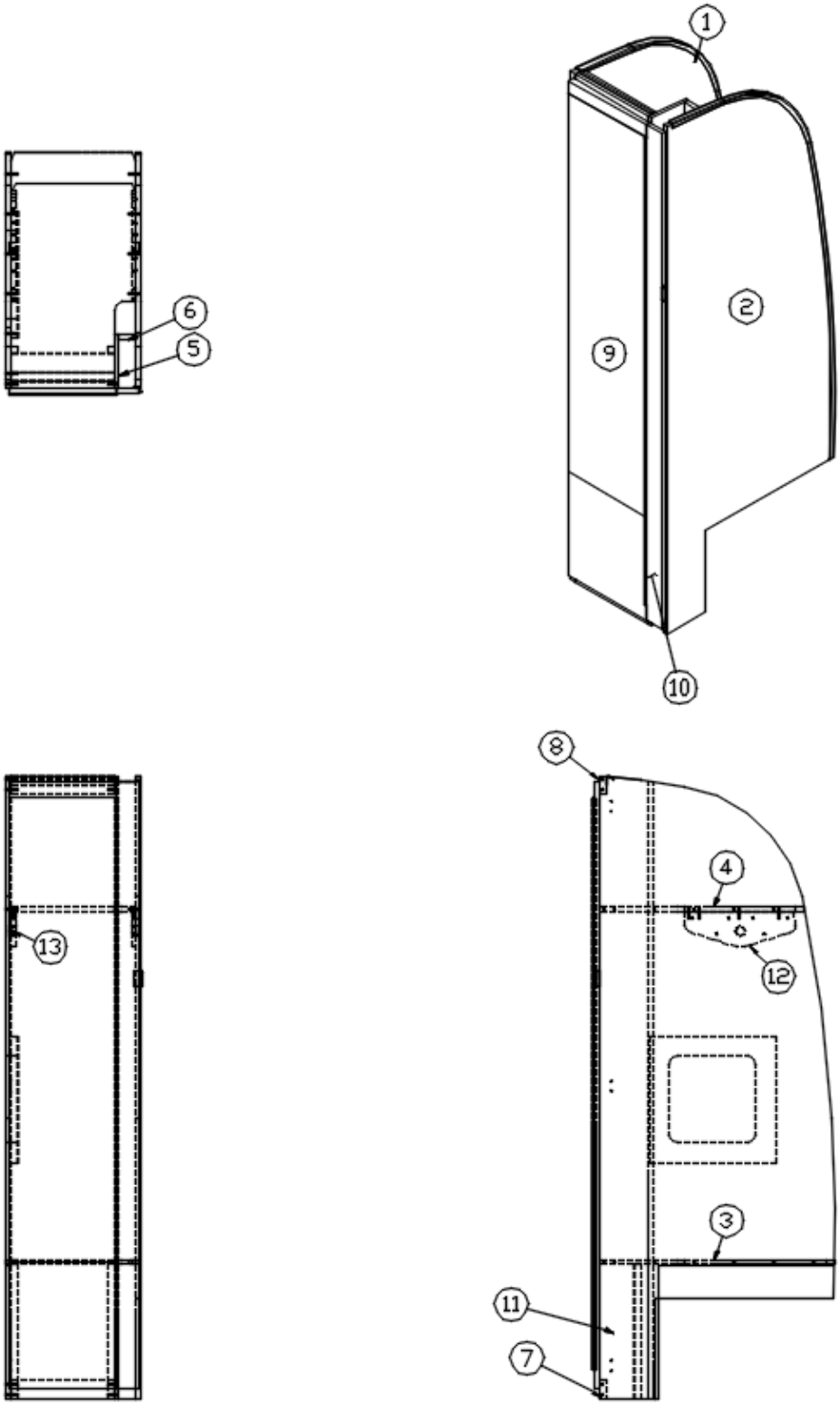

Parts Listed on Next Page

Wardrobe, Roadside, 28' Signature

	966969	Roadside Wardrobe
1.	966969-1	Panel, 29.85 x 78.59
2.	966969-2	Panel, 29.58 x 78.59
3.	966969-3	Panel, 29.63 x 15.81
4.	966969-4	Panel, 25.79 x 15.81
5.	966969-5	Panel, 6.75 x 78.55
6.	966969-6	Panel, 2.31 x 77.89
7.	966969-7	Panel, 2.25 x 13
8.	966969-8	Panel, 2.25 x 13
9.	966969-9	Door, 13.62 x 76.56
10.	966969-10	Door, 2.77 x 76.56
11.	966969-11	Panel, 17 x 13
12.	966969-27	Panel, 14 x 4.5
13.	966969-28	Panel, 14 x 4.5
	372203-26	Mirror, 13.62 x 58.5
	380203-01	Piano hinge, 1/8" pin
	381228-02	Catch, Grabber door (5lb Pull)
	380046	Flange, Chrome
	380045	Tubing, ¾”, Metallic
	200975-04	Conduit, Flexible Black plastic
	381607-11	Hinge, Self-close
	966883	Wardrobe closeout
	104821	Support, Roof locker
	203464	Trim panel, ¾”, Black
	203138-05	Extrusion, ½”, Black
	381220-01	Mirror clip
	381220-02	Mirror clip

2018 INTERNATIONAL
FURNITURE, LAVATORY

Wardrobe, Roadside, 28' Serenity

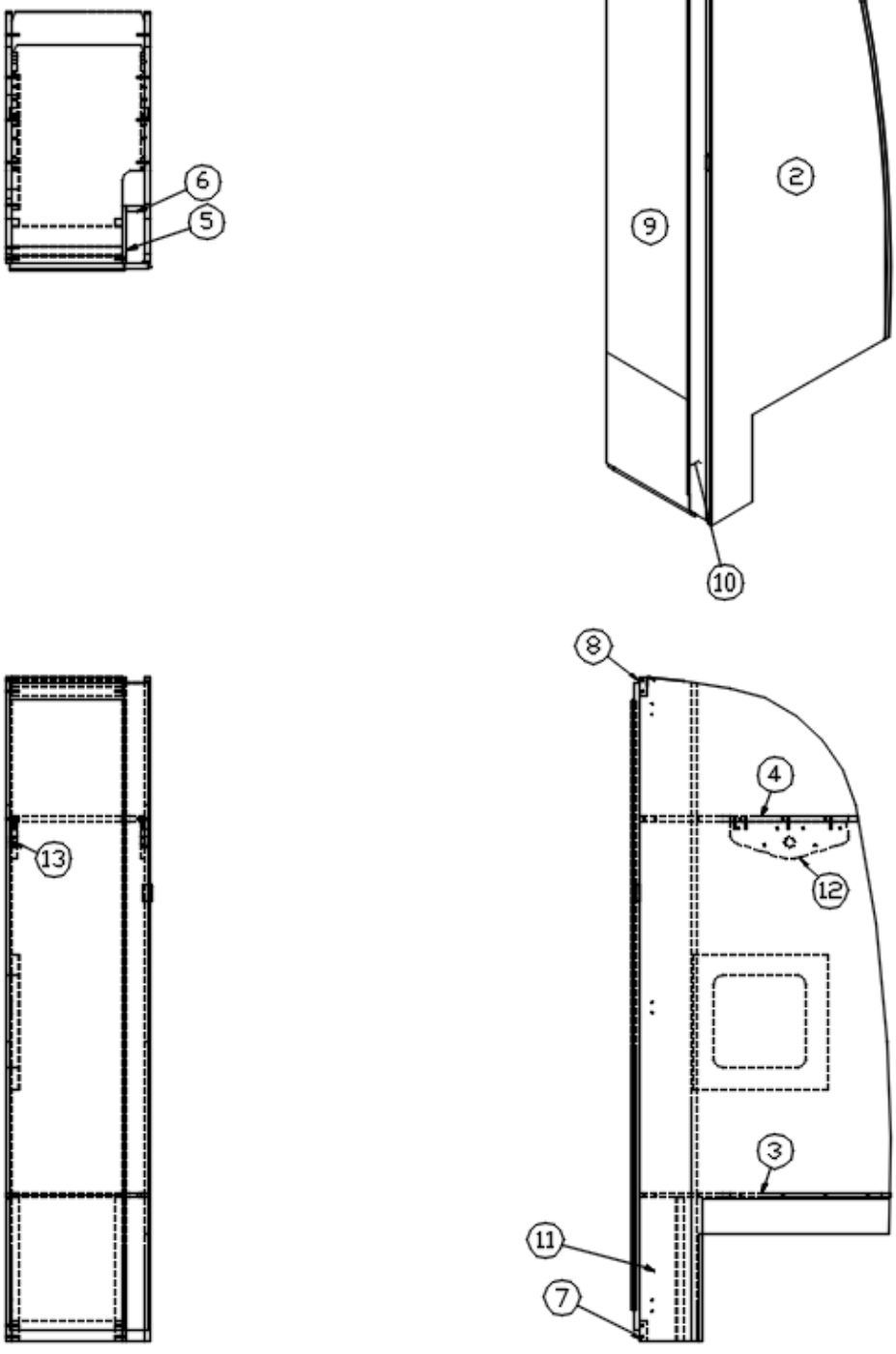

Parts Listed on Next Page

Wardrobe, Roadside, 28' Serenity

	966969-15	Roadside Wardrobe
1.	966969-1	Panel, 29.85 x 78.59
2.	966969-2	Panel, 29.58 x 78.59
3.	966969-3	Panel, 29.63 x 15.81
4.	966969-4	Panel, 25.79 x 15.81
5.	966969-5	Panel, 6.75 x 78.55
6.	966969-6	Panel, 2.31 x 77.89
7.	966969-157	Panel, 2.25 x 13
8.	966969-158	Panel, 2.25 x 13
9.	966969-159	Door, 13.62 x 76.56
10.	966969-1510	Door, 2.77 x 76.56
11.	966969-1511	Panel, 17 x 13
12.	966969-27	Panel, 14 x 4.5
13.	966969-28	Panel, 14 x 4.5
	372203-26	Mirror, 13.62 x 58.5
	380203-01	Piano hinge, 1/8" pin
	381228-02	Catch, Grabber door (5lb Pull)
	380046	Flange, Chrome
	380045	Tubing, ¾”, Metallic
	200975-04	Conduit, Flexible Black plastic
	381607-11	Hinge, Self-close
	966883	Wardrobe closeout
	104821	Support, Roof locker
	203464-02	Trim panel, ¾”, Beige
	203138-03	Extrusion, ½”, Beige
	382115	Pull, Flat Black
	381220-01	Mirror clip
	381220-02	Mirror clip

2018 INTERNATIONAL
FURNITURE, LAVATORY

Wardrobe, Forward, 30’ Signature

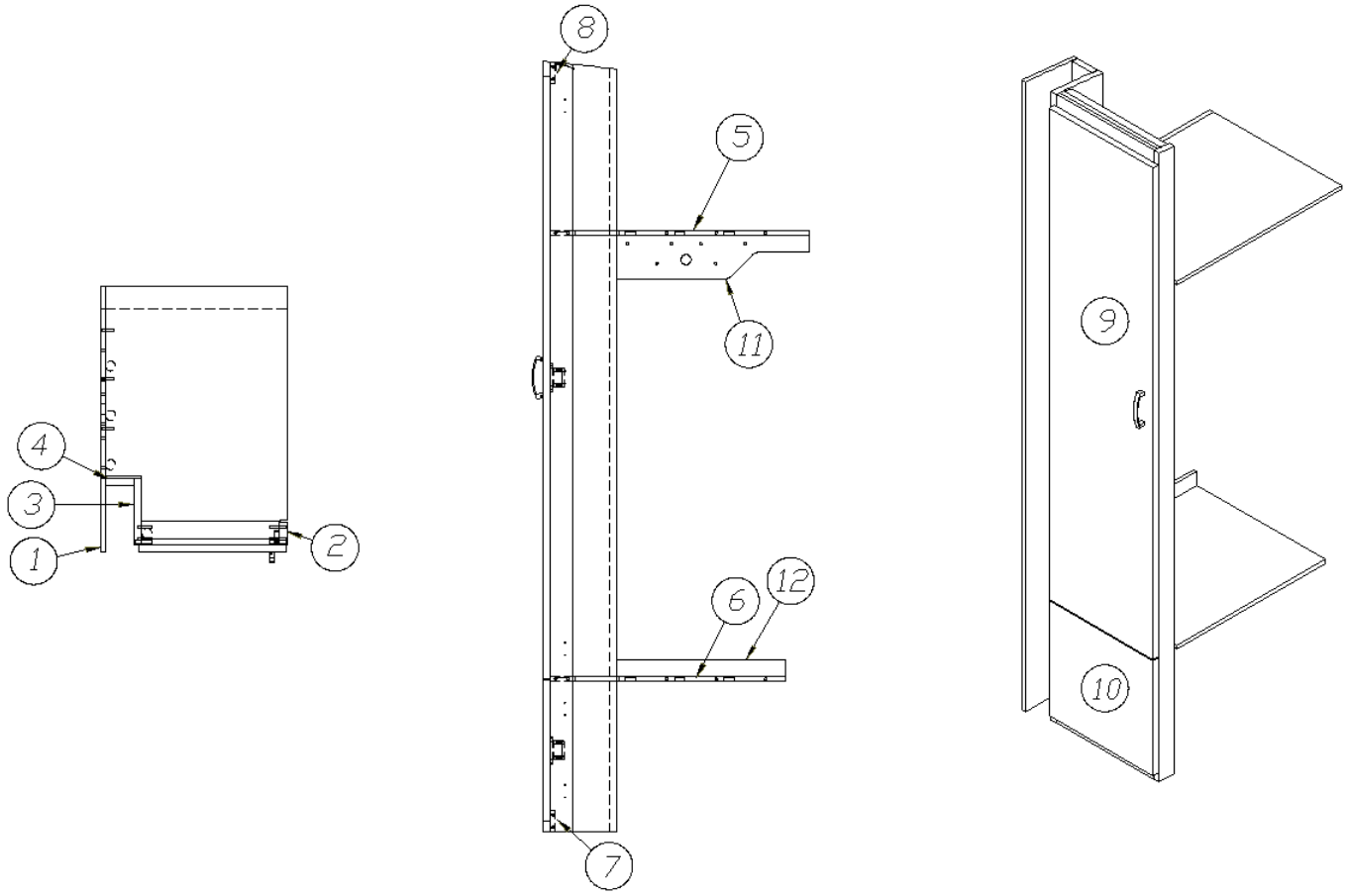

	967533	Forward Wardrobe
1.	967533-1	Panel, 78.77 x 7.5
2.	967533-2	Panel, 78.7 x 2.25
3.	967533-3	Panel, 78.7 x 6.75
4.	967533-4	Panel, 786 x 2.94
5.	967533-5	Panel, 18.5 x 26.38
6.	967533-6	Panel, 18.5 x 24
7.	967533-7	Panel, 2.25 x 14.06
8.	967533-8	Panel, 2.25 x 14.06
9.	967533-9	Door, 15.06 x 61.5
10.	967533-10	Door, 15.06 x 14.41
11.	967533-17	Panel, 5 x 19.63
12.	967533-18	Panel, 2.25 x 17.25
	104821	Support, Roof locker
	382029-03	Handle bar
	381607-11	Hinge, Self-close
	381228	Catch, Grabber door

2018 INTERNATIONAL
FURNITURE, LAVATORY

Wardrobe, Forward, 30’ Serenity

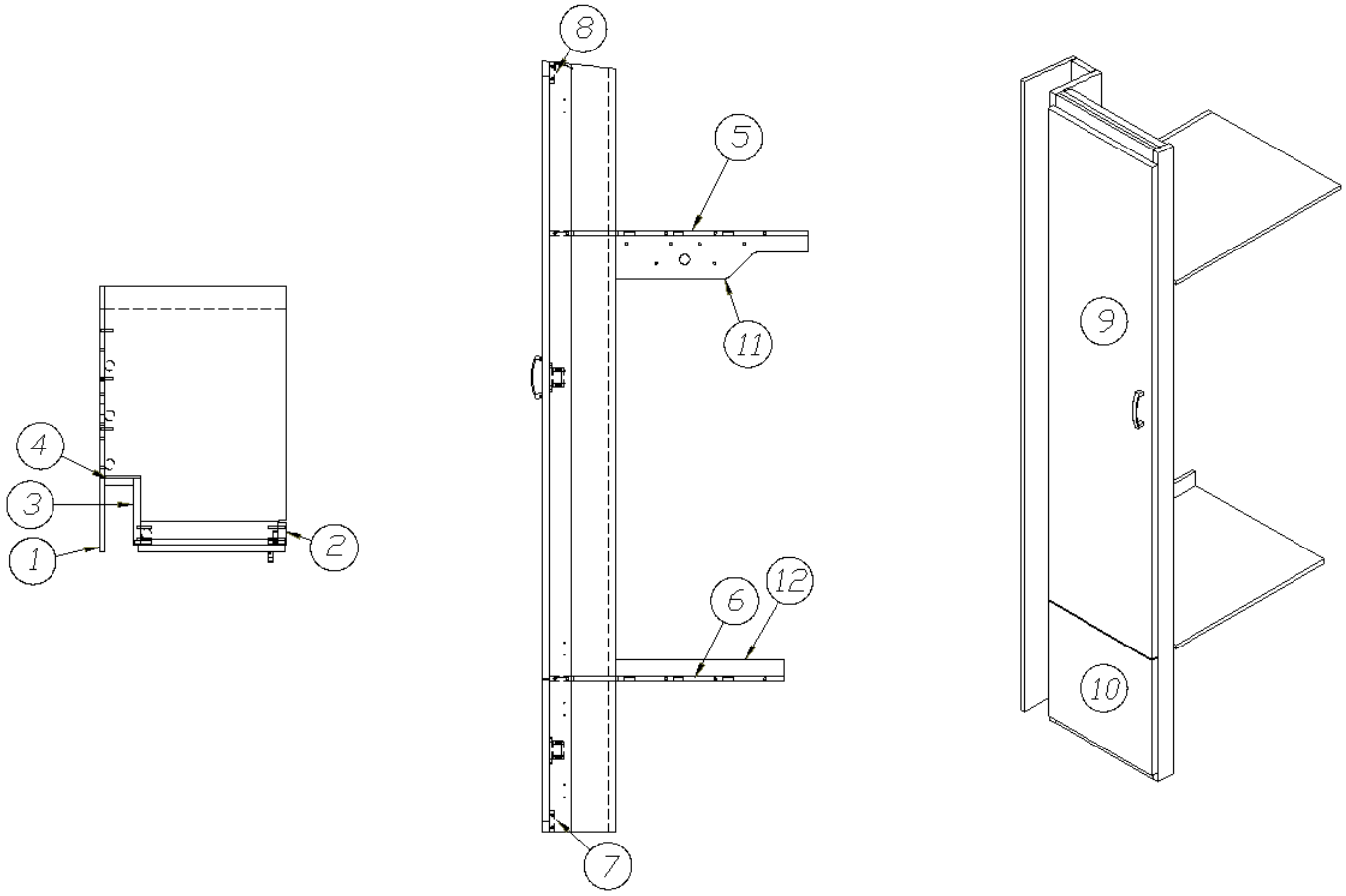

	967533-15	Forward Wardrobe
1.	967533-151	Panel, 78.72 x 7.5
2.	967533-2	Panel, 78.64 x 2.25
3.	967533-153	Panel, 78.64 x 6.75
4.	967533-154	Panel, 77.96 x 2.94
5.	967533-5	Panel, 18.5 x 26.38
6.	967533-6	Panel, 18.5 x 24
7.	967533-157	Panel, 2.25 x 14.06
8.	967533-158	Panel, 2.25 x 14.06
9.	967533-159	Door, 15.06 x 61.5
10.	967533-1510	Door, 15.06 x 14.41
11.	967533-17	Panel, 5 x 19.63
12.	967533-18	Panel, 2.25 x 17.25
	382115	Pull, Flat Black
	104821	Support, Roof locker
	381607-11	Hinge, Self-close
	381228	Catch, Grabber door

2018 INTERNATIONAL
FURNITURE, LAVATORY

Wardrobe, Rear, 30’ Signature

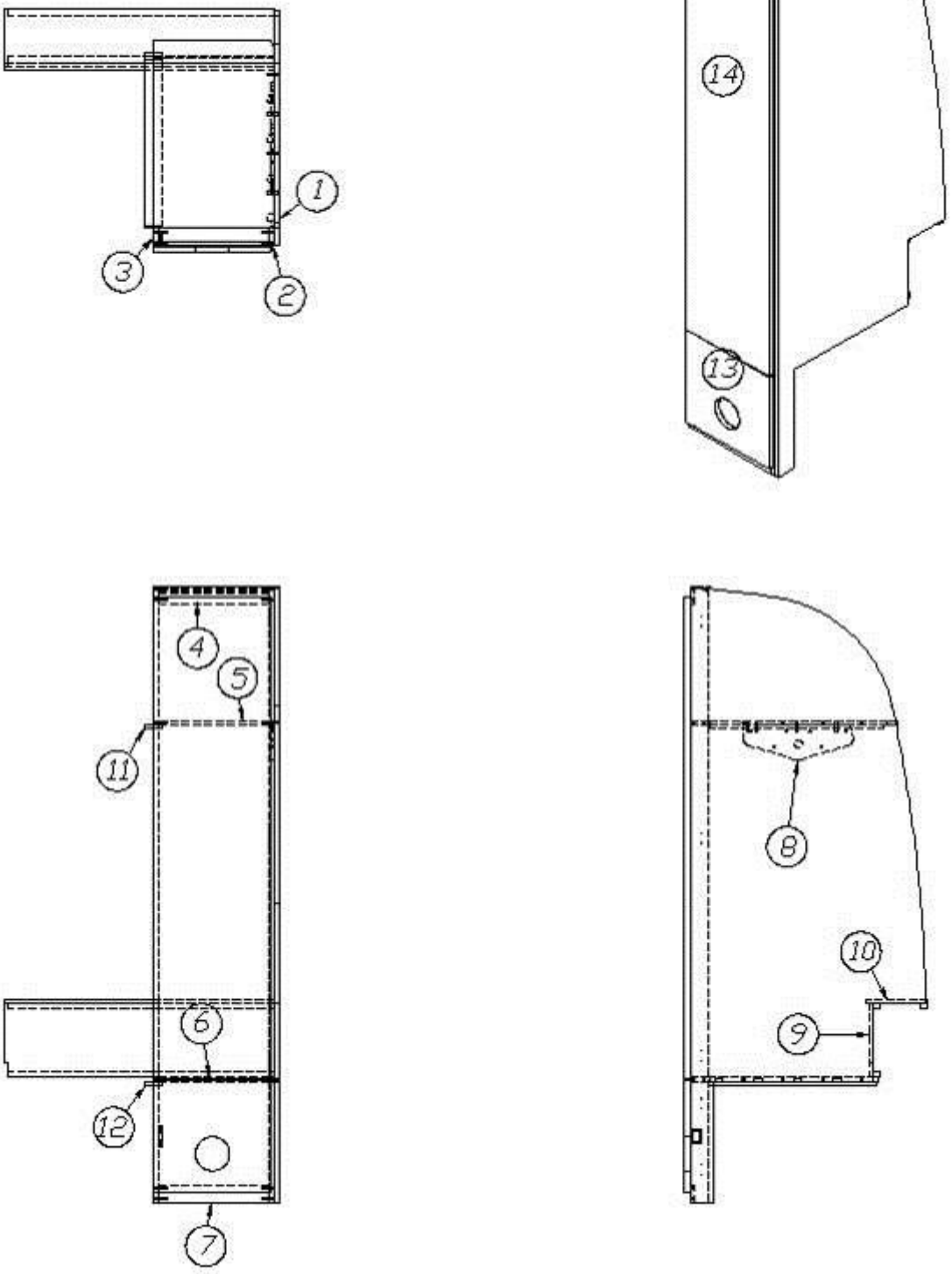

Parts Listed on Next Page

Wardrobe, Rear, 30’ Signature

	967534	Rear Wardrobe
1.	967534-1	Panel, 78.64 x 30.07
2.	967534-2	Panel, 78.64 x 2.25
3.	967534-3	Panel, 78.64 x 2.25
4.	967534-4	Panel, 2.25 x 14.06
5.	967534-5	Panel, 15.56 x 26.38
6.	967534-6	Panel, 15.56 x 24
7.	967534-7	Panel, 2.25 x 14.06
8.	967534-8	Panel, 14 x 4.5
9.	967534-9	Panel, 9.5 x 34.56
10.	967534-10	Panel, 7.75 x 34.56
11.	967534-11	Panel, 2.25 x 22.25
12.	967534-12	Panel, 2.25 x 21.5
13.	967534-13	Door, 15.06 x 14.41
14.	967534-14	Door, 15.06 x 61.5
	104821	Support, Roof locker
	203138-01	Extrusion, Plastic, White
	365364-01	Edgebanding, .63", Ebony Woods
	365364-02	Edgebanding, .94", Ebony Woods
	365340-01	Edgebanding, .63", Frosty White
	382029-03	Handle bar
	381607-11	Hinge, Self-close
	381228	Catch, Grabber door
	380045	Tubing, .75", Elec. Metallic
	200975-04	Conduit, Flexible Black plastic

2018 INTERNATIONAL
FURNITURE, LAVATORY

Wardrobe, Rear, 30’ Serenity

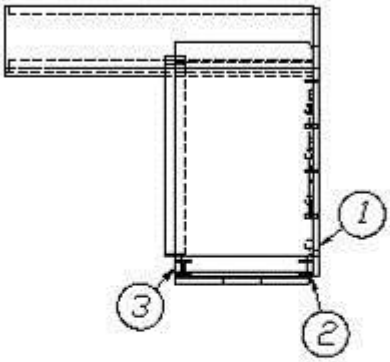

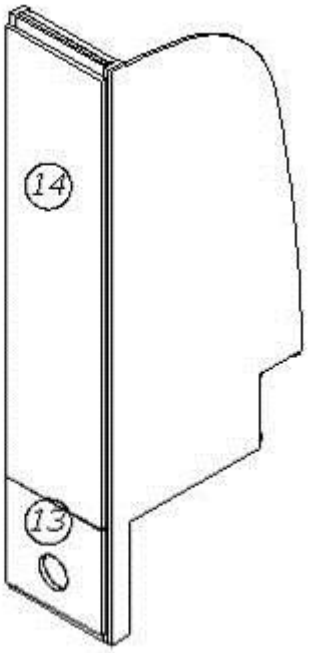

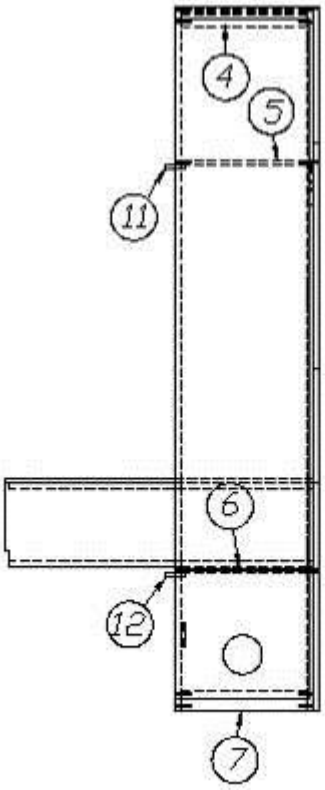

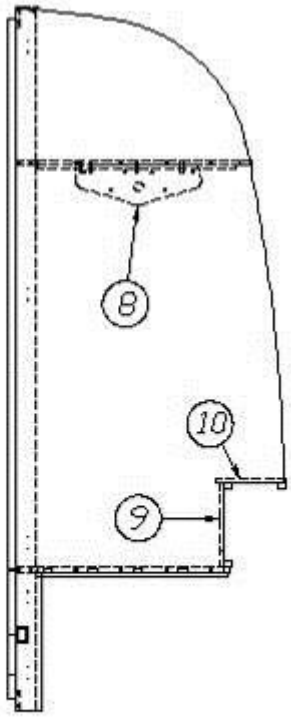

Parts Listed on Next Page

Wardrobe, Rear, 30’ Serenity

	967534-15	Rear Wardrobe
1.	967534-1	Panel, 78.64 x 30.07
2.	967534-2	Panel, 78.64 x 2.25
3.	967534-3	Panel, 78.64 x 2.25
4.	967534-154	Panel, 2.25 x 14.06
5.	967534-5	Panel, 15.56 x 26.38
6.	967534-6	Panel, 15.56 x 24
7.	967534-157	Panel, 2.25 x 14.06
8.	967534-8	Panel, 14 x 4.5
9.	967534-9	Panel, 9.5 x 34.56
10.	967534-10	Panel, 7.75 x 34.56
11.	967534-11	Panel, 2.25 x 22.25
12.	967534-12	Panel, 2.25 x 21.5
13.	967534-1513	Door, 15.06 x 14.41
14.	967534-1514	Door, 15.06 x 61.5
	104821	Support, Roof locker
	203138-03	Extrusion, Plastic, Beige
	365344-01	Edgebanding, .63”, Pearl Bisque
	365344-02	Edgebanding, .94”, Pearl Bisque
	365340-01	Edgebanding, .63", Frosty White
	382115	Pull, Flat Black
	381607-11	Hinge, Self-close
	381228	Catch, Grabber door
	380045	Tubing, .75", Elec. Metallic
	200975-04	Conduit, Flexible Black plastic

Galley Top, 23CB

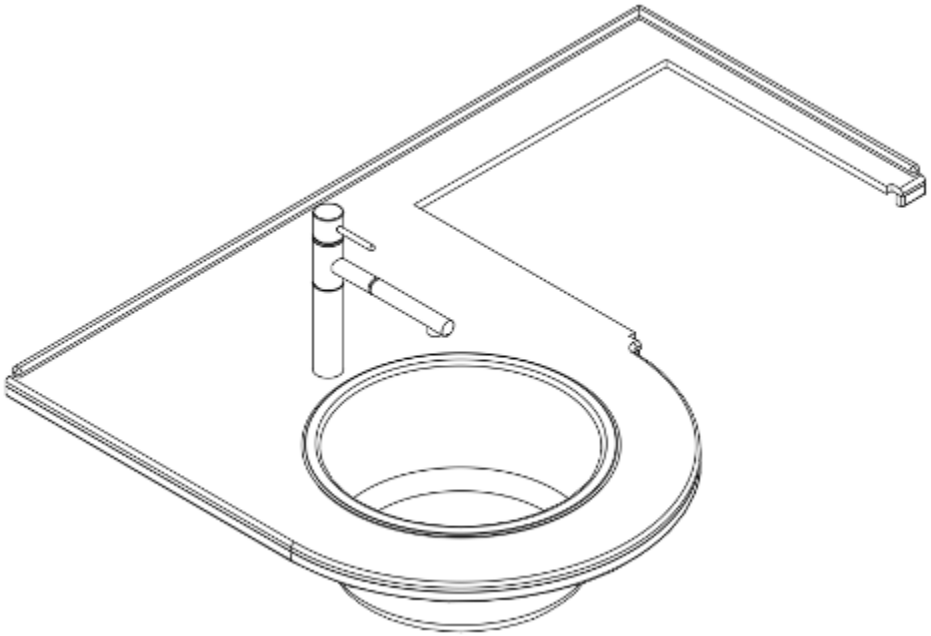

967973-01	Galley Top, Signature
967973-02	Galley Top, Serenity
602348-01	Top, Corian, Ecru, Signature
602348-06	Top, Corian, Sorrel, Serenity
601806	Galley sink, Round, SS
602549	Galley faucet, Pull-out, Chrome

2018 INTERNATIONAL
FURNITURE, GALLEY

Galley Cabinet, Forward Section, 23CB Signature

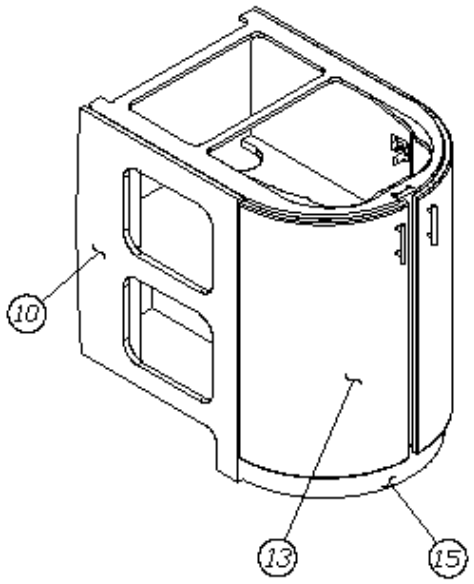

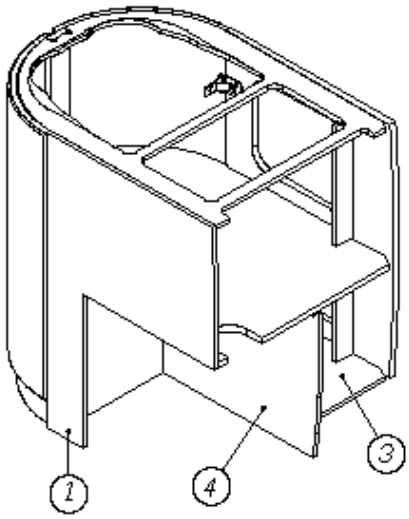

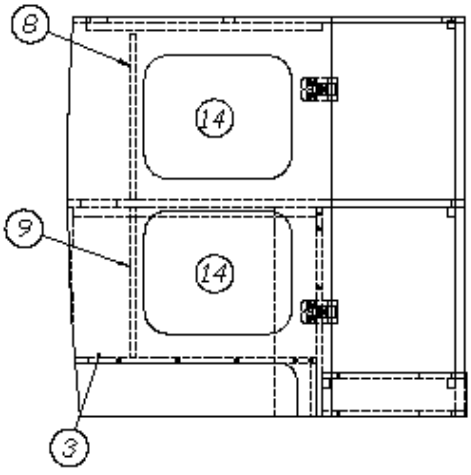

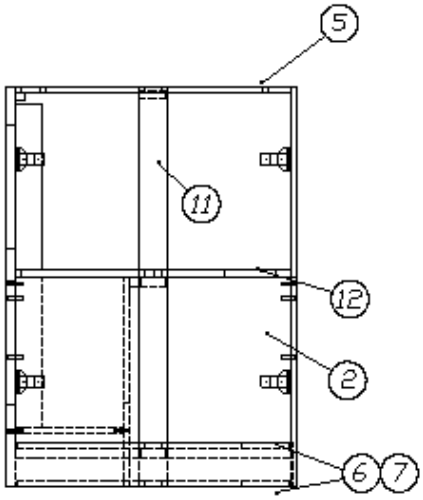

Parts Listed on Next Page

2018 INTERNATIONAL
FURNITURE, GALLEY

Galley Cabinet, Forward Section, 23CB Signature

	967974	Galley Forward Section
1.	967974-1	Panel, 22.58 x 34.25
2.	967974-2	Panel, 23.54 x 17.88
3.	967974-3	Panel, 20.6 x 9.25
4.	967974-4	Panel, 17.88 x 20.82
5.	967974-5	Panel, 24.91 x 33.87
6.	967974-6	Panel, 23.27 x 12.19
7.	967974-7	Panel, 23.27 x 12.19
8.	967974-8	Panel, 2.25 x 14.13
9.	967974-9	Panel, 2.25 x 12.75
10.	967974-10	Panel, 22.57 x 34.25
11.	967974-11	Panel, 2.4 x 34.25
12.	967974-12	Panel, 24.91 x 33.87
13.	801787-0124	Door, 16.81 x 31, Ebony
14.	371432	Door, 11.56 x 13.06
15.	115309	Toe kick, Aluminum
	203445	T-molding, Flexible Black poly
	365364-02	Edgebanding, .94", Ebony Woods
	365364-01	Edgebanding, .63", Ebony Woods
	365340-01	Edgebanding, .63", Frosty White
	382029-00	Handle bar
	381607-11	Hinge, Self-close
	381808-01	Bracket, Face mount hinge
	381856	Catch, Tension 2-ball, Chrome
	381654	Hinge, Black
	381707	Strike w/pull, Black

2018 INTERNATIONAL
FURNITURE, GALLEY

Galley Cabinet, Forward Section, 23CB Serenity

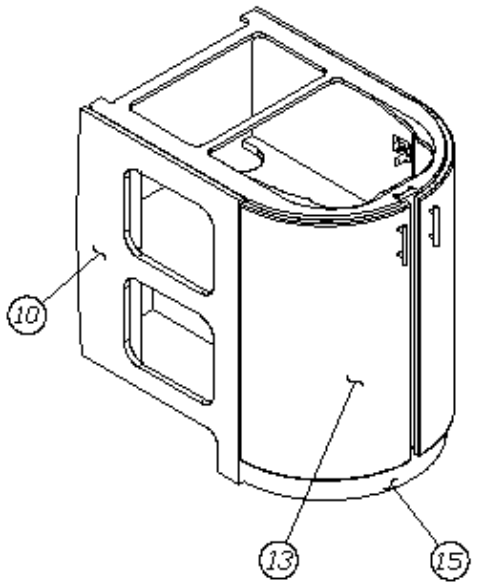

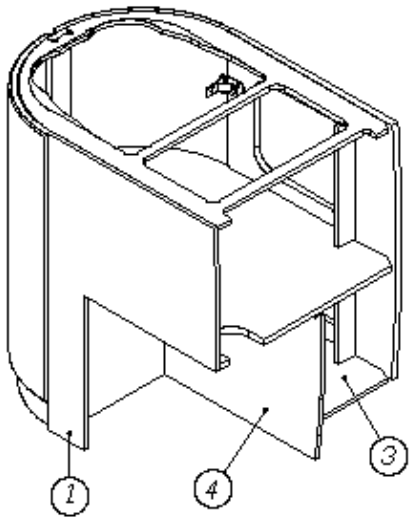

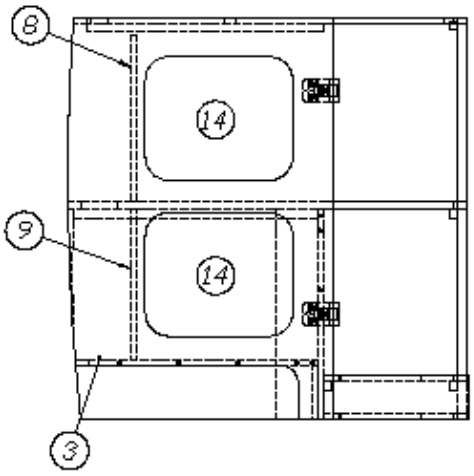

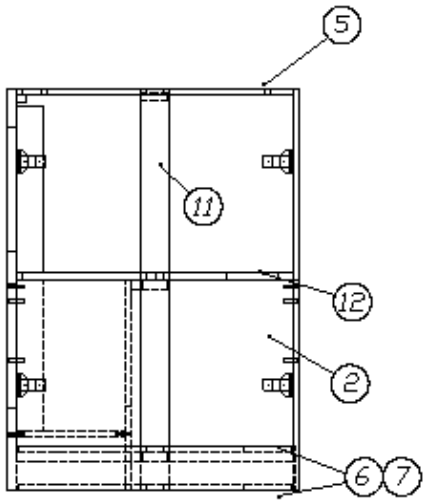

Parts Listed on Next Page

2018 INTERNATIONAL
FURNITURE, GALLEY

Galley Cabinet, Forward Section, 23CB Serenity

	967974-15	Galley Forward Section
1.	967974-1	Panel, 22.58 x 34.25
2.	967974-2	Panel, 23.54 x 17.88
3.	967974-3	Panel, 20.6 x 9.25
4.	967974-4	Panel, 17.88 x 20.82
5.	967974-5	Panel, 24.91 x 33.87
6.	967974-6	Panel, 23.27 x 12.19
7.	967974-7	Panel, 23.27 x 12.19
8.	967974-8	Panel, 2.25 x 14.13
9.	967974-9	Panel, 2.25 x 12.75
10.	967974-1510	Panel, 22.57 x 34.25
11.	967974-1511	Panel, 2.4 x 34.25
12.	967974-12	Panel, 24.91 x 33.87
13.	801787-0118	Door, 16.81 x 31, Asian Sand
14.	371432	Door, 11.56 x 13.06
15.	115309	Toe kick, Aluminum
	203445	T-molding, Flexible Black Poly
	365344-02	Edgebanding, .94", Pearl Bisque
	365344-01	Edgebanding, .63", Pearl Bisque
	365340-01	Edgebanding, .63", Frosty White
	382029-00	Handle bar, 7.48"
	381607-11	Hinge, Self-close
	381808-01	Bracket, Face mount hinge
	381856	Catch, Tension 2-ball, Chrome
	381654	Hinge, Black
	381707	Strike w/pull, Black

2018 INTERNATIONAL
FURNITURE, GALLEY

Galley Cabinet, Aft Section, 23CB Signature

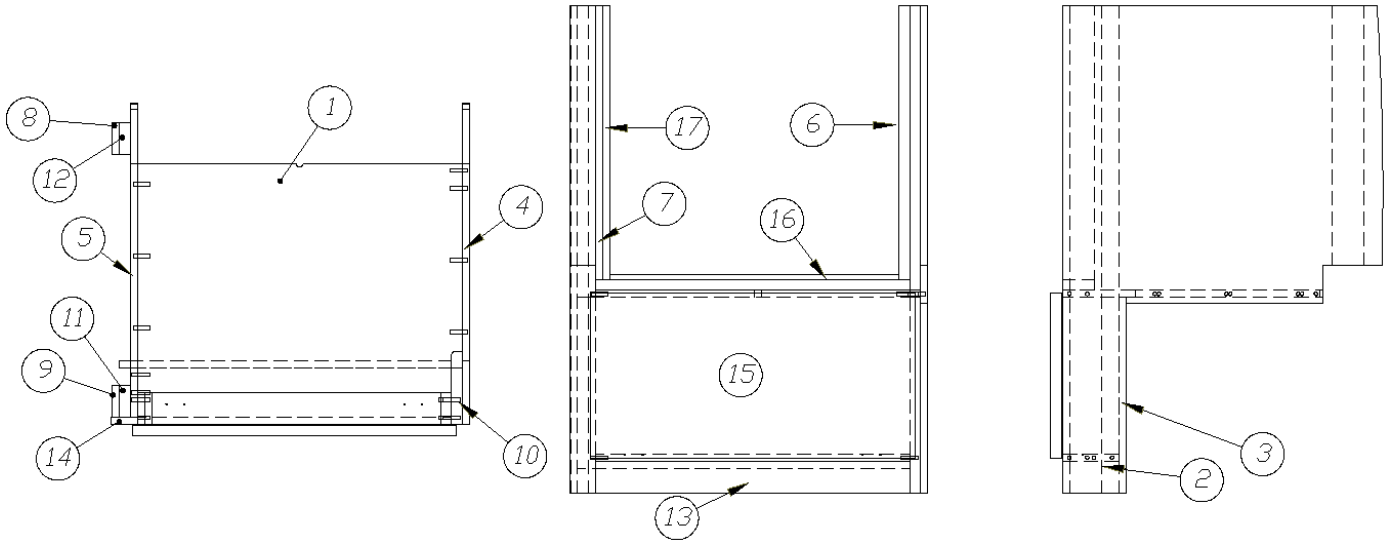

	967980	Galley Aft Section
1.	967980-1	Panel, 18.36 x 22.87
2.	967980-2	Panel, 4 x 22.13
3.	967980-3	Panel, 23.38 x 15
4.	967980-4	Panel, 22.58 x 34.25
5.	967980-5	Panel, 228 x 34.25
6.	967980-6	Panel, 2.25 x 19.25
7.	967980-7	Panel, 2.25 x 19.25
8.	967980-8	Panel, 2.25 x 18.25
9.	967980-9	Panel, 2.25 x 34.25
10.	967980-10	Panel, 4 x 34.25
11.	967980-11	Panel, 2.25 x 34.75
12.	967980-12	Panel, 2.25 x 18.25
13.	967980-13	Panel, 2.25 x 22.13
14.	967980-14	Panel, 1.75 x 34.25
15.	967980-15I	Door, 22.81 x 11.63
16.	967980-21	Panel, 2.25 x 22.13
17.	967980-22	Panel, 2.25 x 19.25
	381607-11	Hinge, Self-close
	381228-02	Catch, Grabber door (5lb Pull)
	382029-05	Handle bar

2018 INTERNATIONAL
FURNITURE, GALLEY

Galley Cabinet, Aft Section, 23CB Serenity

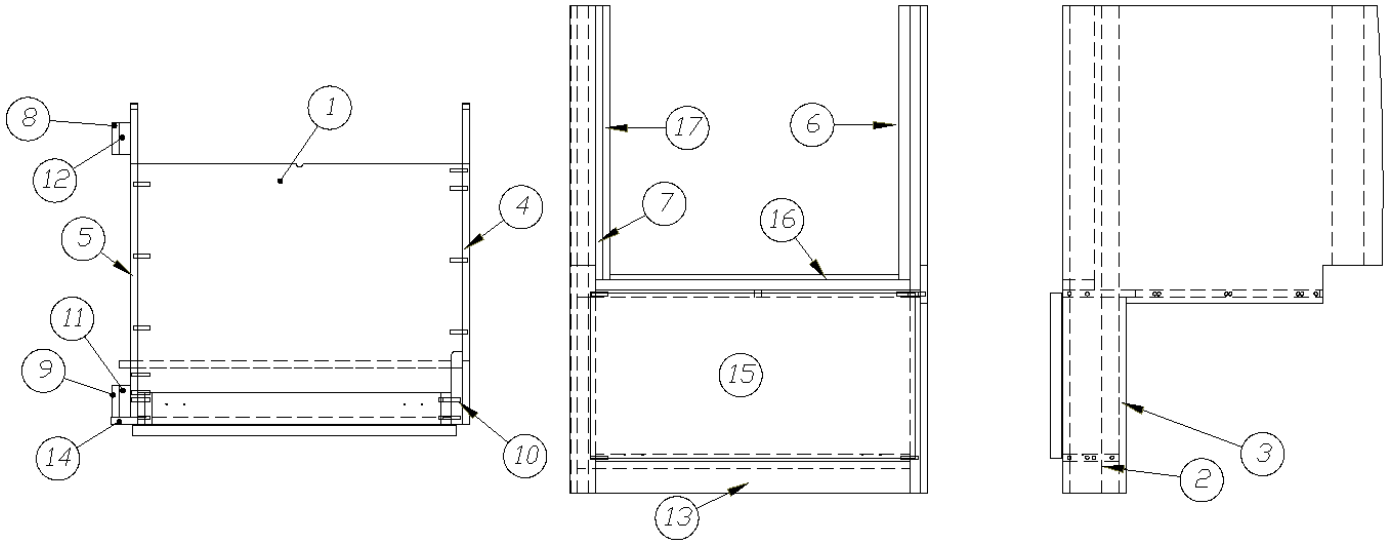

	967980-15	Galley Aft Section
1.	967980-1	Panel, 18.36 x 22.87
2.	967980-2	Panel, 4 x 22.13
3.	967980-3	Panel, 23.38 x 15
4.	967980-4	Panel, 22.58 x 34.25
5.	967980-5	Panel, 228 x 34.25
6.	967980-6	Panel, 2.25 x 19.25
7.	967980-7	Panel, 2.25 x 19.25
8.	967980-8	Panel, 2.25 x 18.25
9.	967980-9	Panel, 2.25 x 34.25
10.	967980-10	Panel, 4 x 34.25
11.	967980-11	Panel, 2.25 x 34.25
12.	967980-12	Panel, 2.25 x 18.25
13.	967980-1513	Panel, 2.25 x 22.13
14.	967980-1514	Panel, 1.75 x 34.75
15.	967980-1515	Door, 22.81 x 11.63
16.	967980-1521	Panel, 2.25 x 22.13
17.	967980-22	Panel, 2.25 x 19.25
	381607-11	Hinge, Self-close
	381228-02	Catch, Grabber door (5lb pull)
	382029-05	Handle bar

Galley Top, 23FB

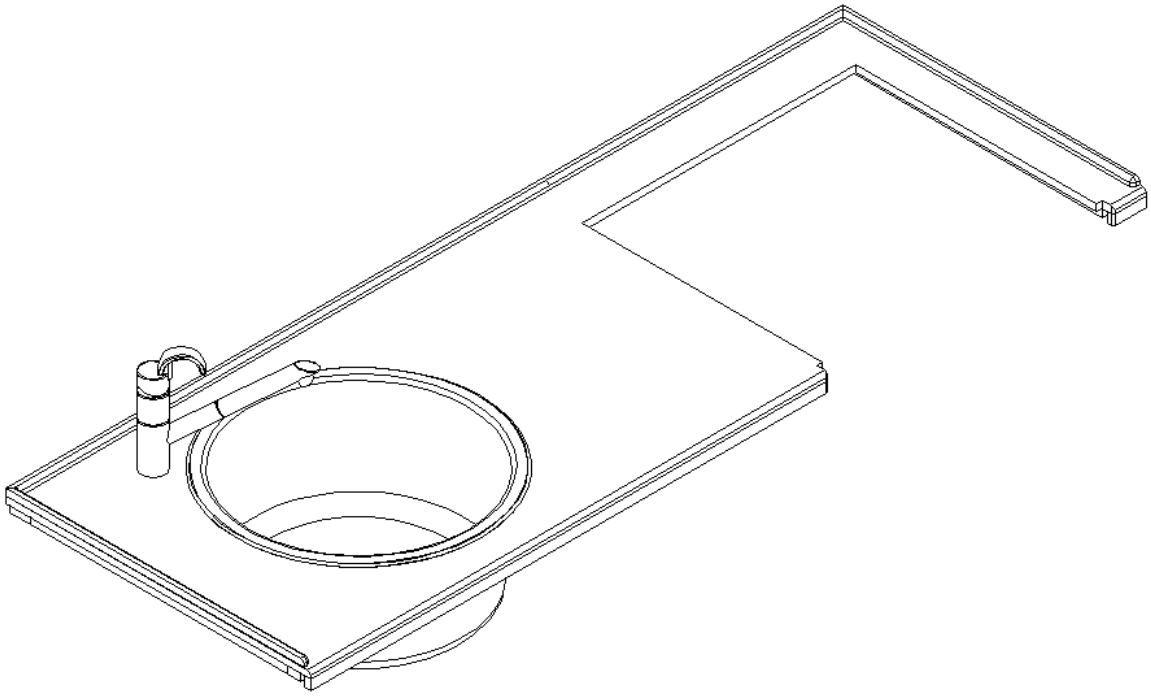

967981-01	Galley Top, Signature
967981-02	Galley Top, Serenity
602349-01	Top, Corian, Ecru, Signature
602349-06	Top, Corian, Sorrel, Serenity
601806	Galley sink, Round, SS
602549	Galley faucet, Pull-out, Chrome

2018 INTERNATIONAL
FURNITURE, GALLEY

Galley Cabinet, 23FB Signature

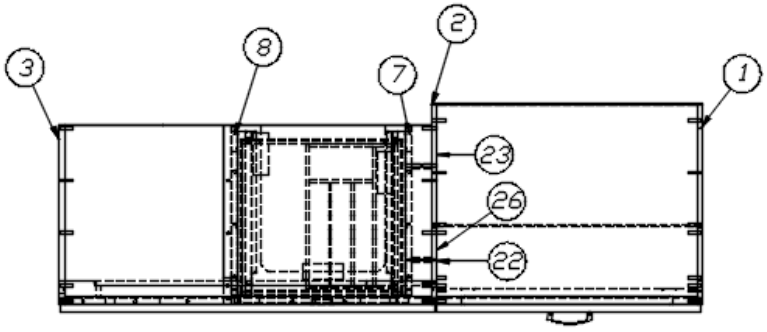

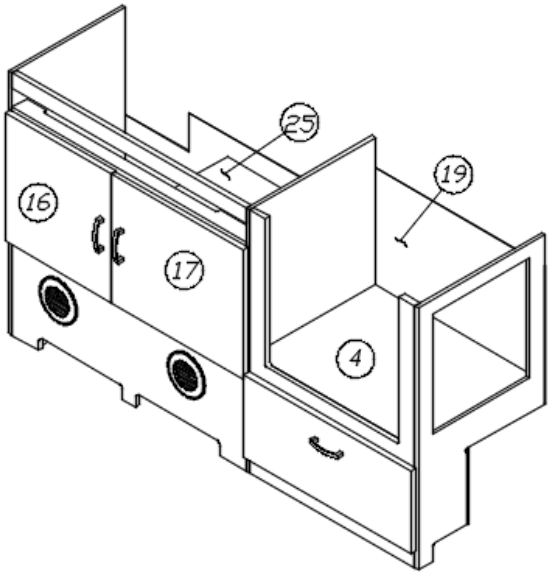

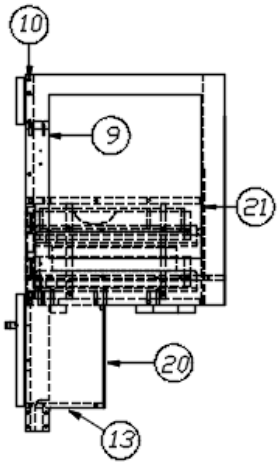

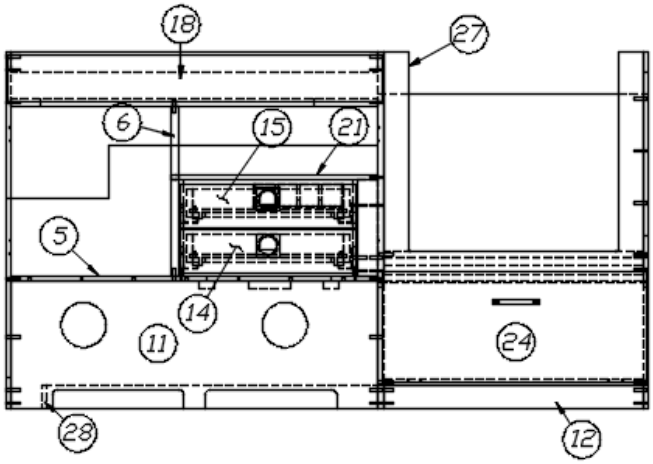

Parts Listed on Next Page

Galley Cabinet, 23FB Signature

	968199	Galley Cabinet
1.	968199-1	Panel, 19.13 x 34.25
2.	968199-2	Panel, 19.13 x 34.25
3.	968199-3	Panel, 17.13 x 34.25
4.	968199-4	Panel, 18.38 x 25
5.	968199-5	Panel, 17.13 x 35.38
6.	968199-6	Panel, 17.13 x 16.31
7.	968199-7	Panel, 16.13 x 9.22
8.	968199-8	Panel, 16.13 x 9.22
9.	968199-9	Panel, 2.25 x 35.38
10.	968199-10	Panel, 2 x 35.38
11.	968199-11	Panel, 35.38 x 12.19
12.	968199-12	Panel, 25 x 2.25
13.	968199-13	Panel, 7.5 x 25
14.	968199-16	Panel, 16.88 x 4.25
15.	968199-17	Panel, 16.88 x 4.25
16.	968199-18	Door, 16 x 16.81
17.	968199-19	Door, 19.88 x 16.81
18.	968199-20	Panel, 36 x 4.5
19.	968199-21	Panel, 17.63 x 26
20.	968199-22	Panel, 9.88 x 26
21.	968199-23	Panel, 17.13 x 20
22.	968199-24	Panel, 2 x 9.22
23.	968199-25	Panel, 2 x 9.22
24.	968199-26	Door, 25.38 x 10.75
25.	968199-34	Panel, 35.88 x 12.98
26.	968199-38	Panel, 32.38 x 2.25
27.	968199-40	Panel, 25 x 21.38
28.	968199-46	Panel, 1.25 x 2.25
	382029-05	Handle bar, 21”
	382029-04	Pull handle, 15”
	968021-03	Drawer box, Self-close, 2.75 x 15
	382203-03	Slide drawer, Self-close
	968024	Cutlery insert
	381228-02	Catch, Grabber door
	365364-01	Edgebanding, .63”, Ebony Woods
	365364-02	Edgebanding, .94”, Ebony Woods
	381708	Waste basket
	114811	Aluminum angle, .5 x .5
	382203-06	Front fixing clips
	382026	Finger pull, Flush, SS

2018 INTERNATIONAL
FURNITURE, GALLEY

Galley Cabinet, 23FB Serenity

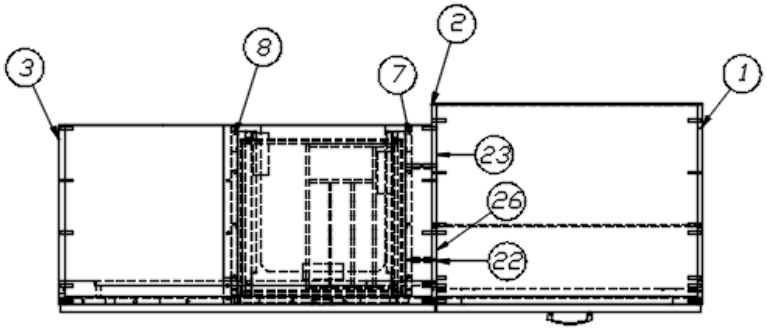

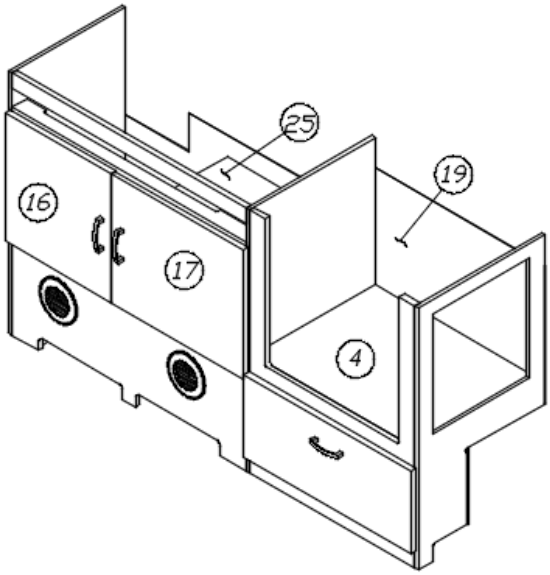

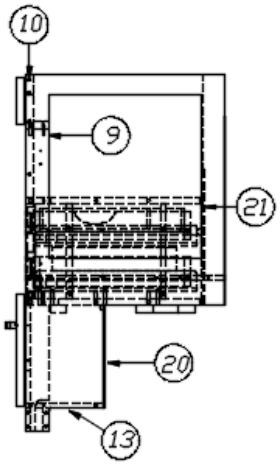

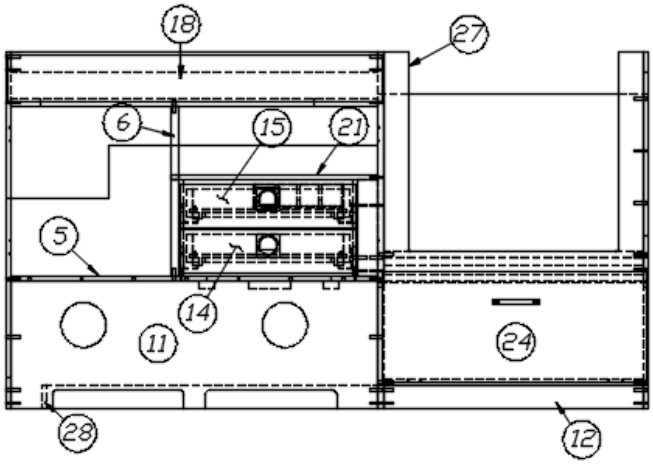

Parts Listed on Next Page

Galley Cabinet, 23FB Serenity

	968199-15	Galley Cabinet
1.	968199-1	Panel, 19.13 x 34.25
2.	968199-2	Panel, 19.13 x 34.25
3.	968199-3	Panel, 17.13 x 34.25
4.	968199-4	Panel, 18.38 x 25
5.	968199-5	Panel, 17.13 x 35.38
6.	968199-6	Panel, 17.13 x 16.31
7.	968199-7	Panel, 16.13 x 9.22
8.	968199-8	Panel, 16.13 x 9.22
9.	968199-9	Panel, 2.25 x 35.38
10.	968199-1510	Panel, 2 x 35.38
11.	968199-1511	Panel, 35.38 x 12.19
12.	968199-1512	Panel, 25 x 2.25
13.	968199-13	Panel, 7.5 x 25
14.	968199-1516	Panel, 16.88 x 4.25
15.	968199-1517	Panel, 16.88 x 4.25
16.	968199-1518	Door, 16 x 16.81
17.	968199-1519	Door, 19.88 x 16.81
18.	968199-1520	Panel, 36 x 4.5
19.	968199-21	Panel, 17.63 x 26
20.	968199-22	Panel, 9.88 x 26
21.	968199-23	Panel, 17.13 x 20
22.	968199-24	Panel, 2 x 9.22
23.	968199-25	Panel, 2 x 9.22
24.	968199-1526	Door, 25.38 x 10.75
25.	968199-34	Panel, 35.88 x 12.98
26.	968199-1538	Panel, 32.38 x 2.25
27.	968199-1540	Panel, 25 x 21.38
28.	968199-1546	Panel, 1.25 x 2.25
	382029-05	Handle bar, 21”
	382115	Pull, Flat Black
	968021-03	Drawer box, Self-close, 2.75 x 15
	382203-03	Slide drawer, Self-close
	968024	Cutlery insert
	381228-02	Catch, Grabber door
	365344-01	Edgebanding, .63”, Pearl Bisque
	365344-02	Edgebanding, .94”, Pearl Bisque
	381708	Waste basket
	114811	Aluminum angle, .5 x .5
	382203-06	Front fixing clips
	382026	Finger pull, Flush, SS

2018 INTERNATIONAL
FURNITURE, GALLEY

Galley Cabinet, 23FB A2GO

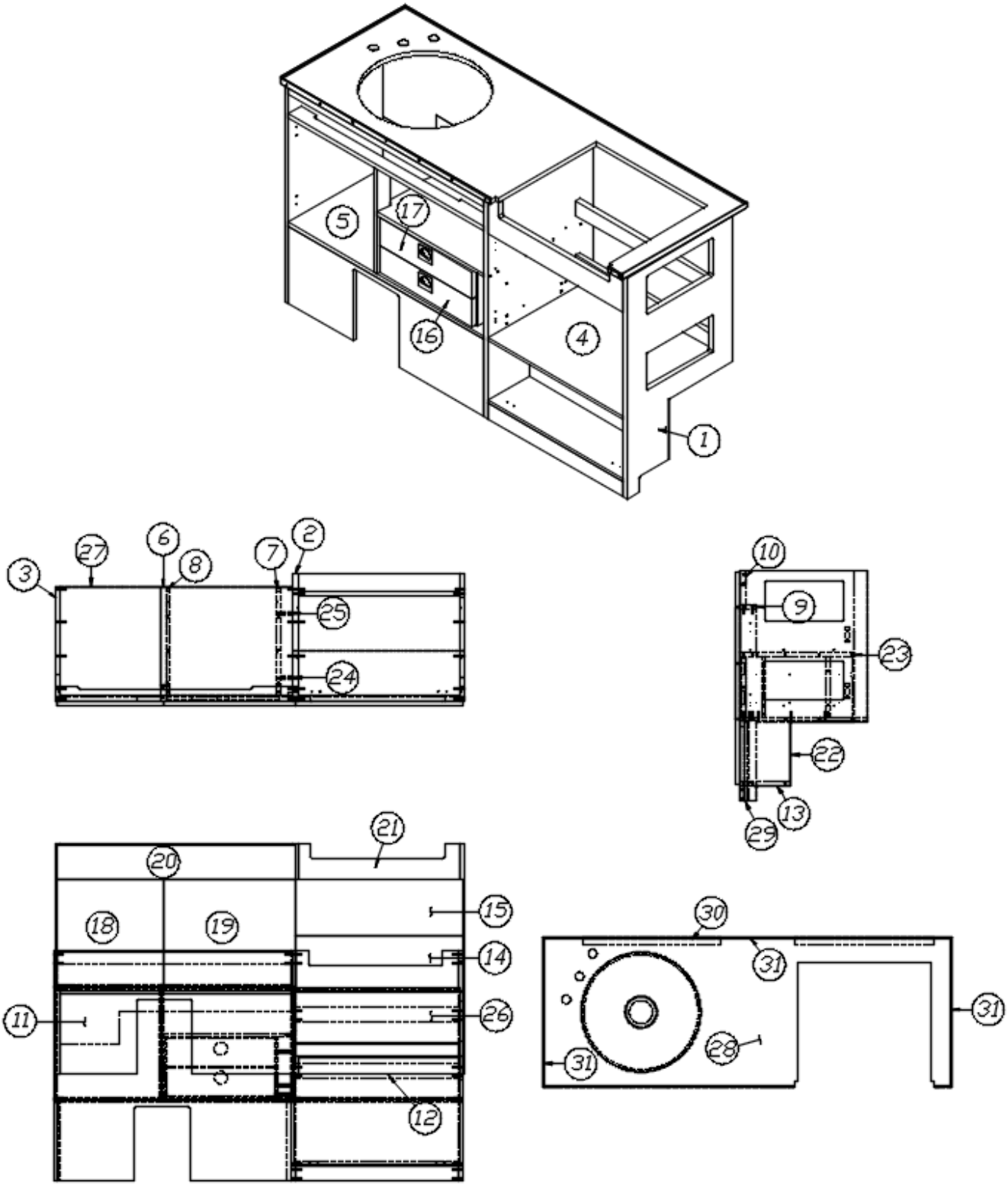

Parts Listed on Next Page

2018 INTERNATIONAL
FURNITURE, GALLEY

Galley Cabinet, 23FB A2GO

	968044	Galley Cabinet
1.	968044-1	Panel, 19.13 x 34.75
2.	968044-2	Panel, 19.13 x 34.75
3.	968044-3	Panel, 17.13 x 34.75
4.	968044-4	Panel, 19.13 x 24.5
5.	968044-5	Panel, 17.13 x 35.38
6.	968044-6	Panel, 17.13 x 16.18
7.	968044-7	Panel, 16.13 x 9.22
8.	968044-8	Panel, 16.13 x 9.22
9.	968044-9	Panel, 2.25 x 35.38
10.	968044-10	Panel, 20 x 35.38
11.	968044-11	Panel, 35.38 x 12.19
12.	968044-12	Panel, 24.5 x 2.44
13.	968044-13	Panel, 7.5 x 24.5
14.	968044-14	Panel, 25.13 x 8.31
15.	968044-15	Panel, 25.13 x 8.31
16.	968044-16	Panel, 16.88 x 4.25
17.	968044-17	Panel, 16.88 x 4.25
18.	968044-18	Door, 16 x 16.81
19.	968044-19	Door, 19.88 x 16.81
20.	968044-20	Panel, 36 x 5.13
21.	968044-21	Panel, 24.5 x 5.75
22.	968044-22	Panel, 9.62 x 26
23.	968044-23	Panel, 17.13 x 20
24.	968044-24	Panel, 20 x 9.09
25.	968044-25	Panel, 20 x 9.09
26.	968044-26	Door, 25.13 x 9.75
27.	968044-34	Panel, 35.88 x 13.63
28.	968044-40	Top, 22.50 x 61.75
29.	114811	Aluminum angle .5 x .5
30.	114812	Aluminum angle, 1 x 1
31.	115064	Trim, Aluminum counter top
	968021-03	Drawer box, 2.75”
	968022-05	Drawer box, 6”
	382029-04	Handle bar, 15”
	382029-05	Handle bar, 21.33”
	382203-03	Drawer slide, 15”, Tandem
	381607-11	Hinge, Self-close
	381228-02	Catch, Grabber door (5lb pull)
	382203-06	Front fixing clips (Pr.)
	968024	Insert, Cutlery drawer

Galley Top, 25’

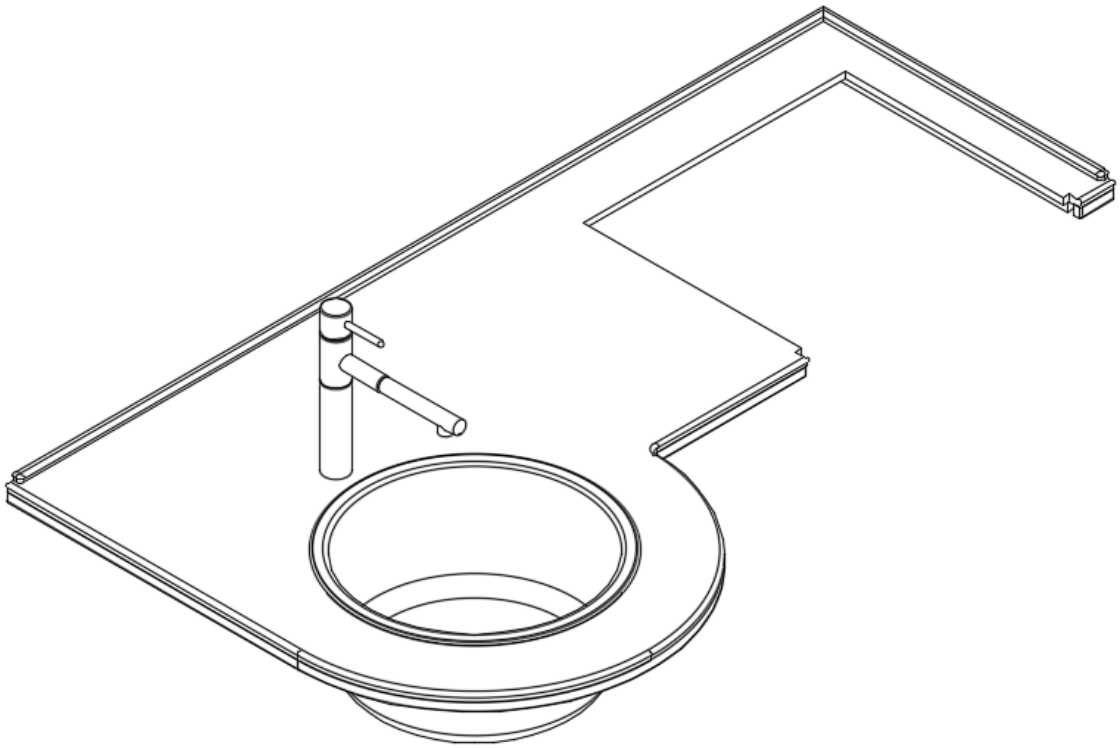

967985-01	Galley Top, Signature
967985-02	Galley Top, Serenity
602350-01	Top, Corian, Ecru, Signature
602350-06	Top, Corian, Sorrel, Serenity
601806	Galley sink, Round, SS
602549	Galley faucet, Pull-out, Chrome

2018 INTERNATIONAL
FURNITURE, GALLEY

Galley Cabinet, Forward Section, 25’ Signature

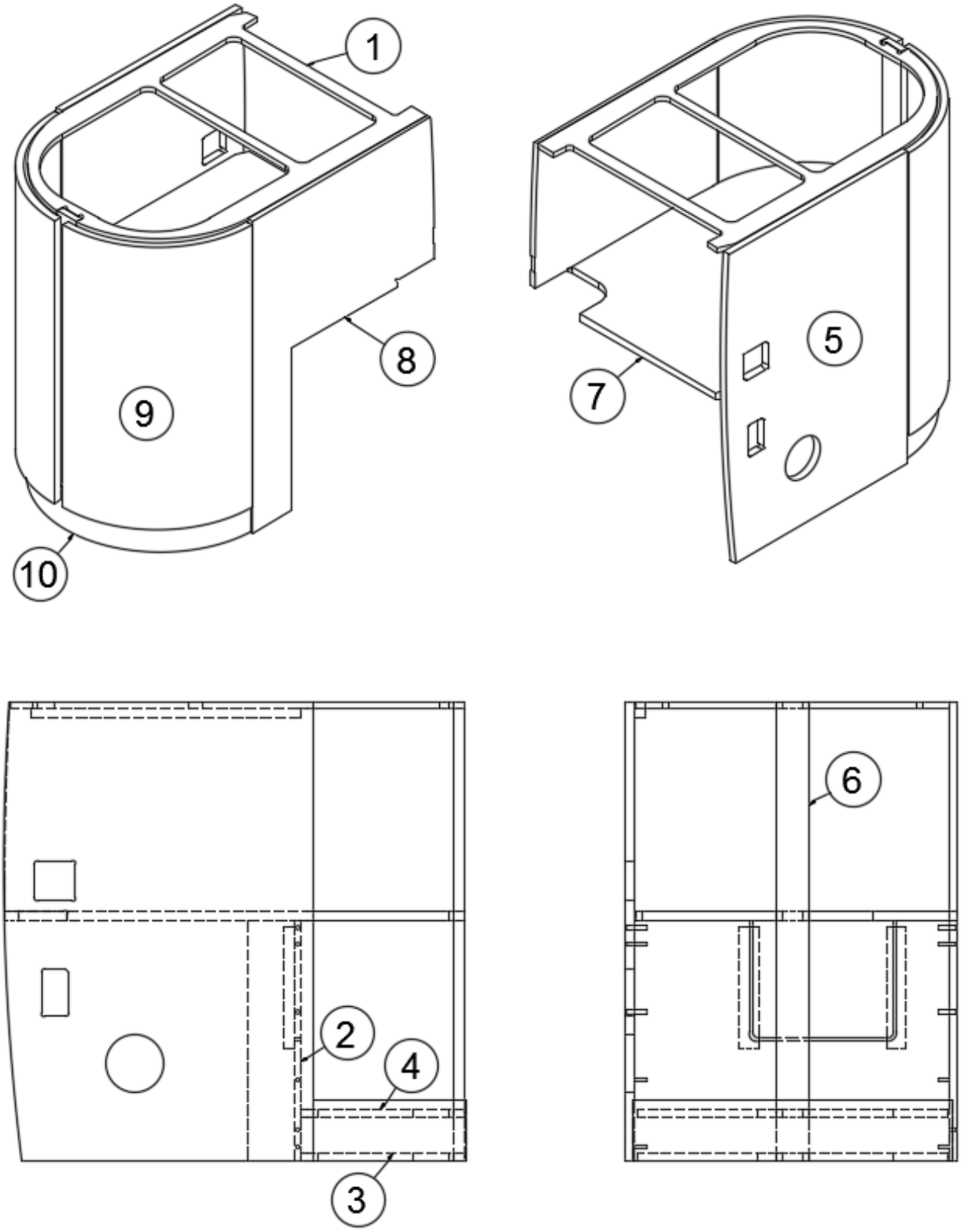

Parts Listed on Next Page

Galley Cabinet, Forward Section, 25’ Signature

	967986	Galley Forward Section
1.	967986-1	Panel, 23.5 x 33.91
2.	967986-2	Panel, 23.54 x 17.88
3.	967986-3	Panel, 23.27 x 12.18
4.	967986-4	Panel, 23.27 x 12.18
5.	967986-6	Panel, 234 x 34.25
6.	967986-7	Panel, 2.4 x 34.25
7.	967986-8	Panel, 23.5 x 34.38
8.	967986-9	Panel, 234 x 34.25
9.	801787-0124	Door, 16.97 x 31, Ebony
10.	115309	Toe kick, Aluminum
	967986-24	Panel, 10.5 x 8.75
	203464	Trim panel, .75”, Black
	381808-01	Bracket, Face mount hinge
	381607-11	Hinge, Self-close
	382029-05	Handle bar, 21.33”
	203483	Sink cover, Round
	381708	Wastebasket

Galley Cabinet, Forward Section, 25’ Serenity

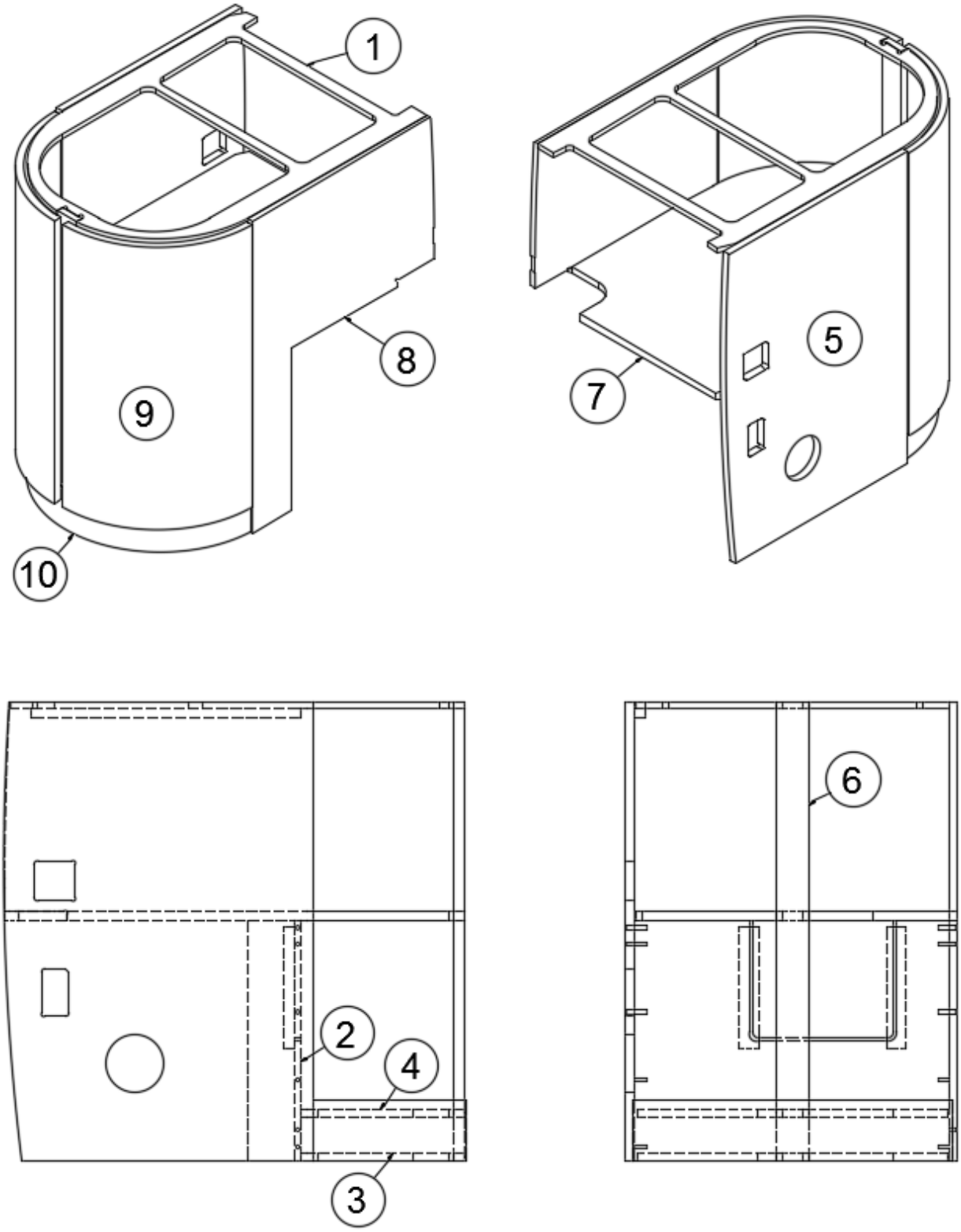

Parts Listed on Next Page

Galley Cabinet, Forward Section, 25’ Serenity

	967986-15	Galley Forward Section
1.	967986-1	Panel, 23.5 x 33.91
2.	967986-2	Panel, 23.54 x 17.88
3.	967986-3	Panel, 23.27 x 12.18
4.	967986-4	Panel, 23.27 x 12.18
5.	967986-156	Panel, 234 x 34.25
6.	967986-157	Panel, 2.4 x 34.25
7.	967986-8	Panel, 23.5 x 34.38
8.	967986-159	Panel, 234 x 34.25
9.	801787-0118	Door, 16.97 x 31, Asian Sand
10.	115309	Toe kick, Aluminum
	967986-24	Panel, 10.5 x 8.75
	203464-02	Trim panel, .75”, Beige
	381808-01	Bracket, Face mount hinge
	381607-11	Hinge, Self-close
	382029-05	Handle bar, 21.33”
	203483	Sink cover, Round
	381708	Wastebasket

2018 INTERNATIONAL
FURNITURE, GALLEY

Galley Cabinet, Oven Section, 25’ Signature

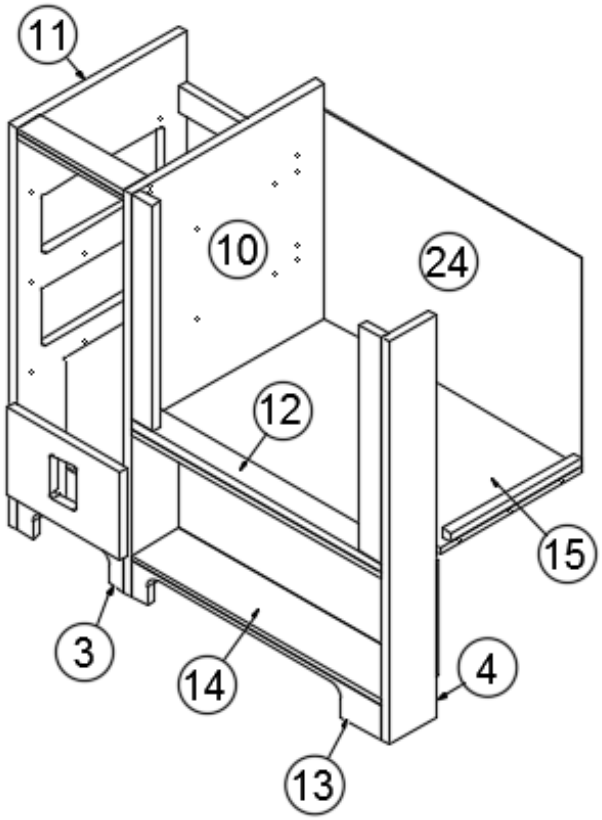

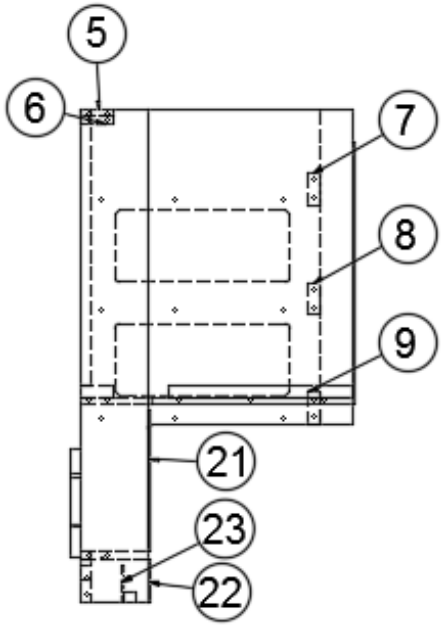

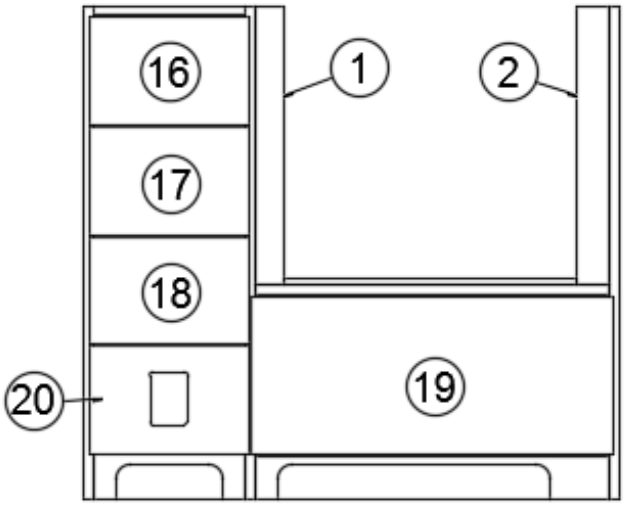

Parts Listed on Next Page

Galley Cabinet, Oven Section, 25’ Signature

	967987	Galley Oven Section
1.	967987-1	Panel, 2.01 x 19.25
2.	967987-2	Panel, 2.24 x 19.25
3.	967987-3	Panel, 3.5 x 10.5
4.	967987-4	Panel, 4.69 x 34.25
5.	967987-5	Panel, 2.25 x 10.5
6.	967987-6	Panel, 2.25 x 10.5
7.	967987-7	Panel, 2.25 x 10.5
8.	967987-8	Panel, 2.25 x 10.5
9.	967987-9	Panel, 2.25 x 10.5
10.	967987-10	Panel, 18.88 x 34.25
11.	967987-11	Panel, 16.44 x 34.25
12.	967987-12	Panel, 2.25 x 24.5
13.	967987-14	Panel, 3 x 24
14.	967987-15I	Panel, 4.69 x 24.5
15.	967987-16	Panel, 18.88 x 25.25
16.	967987-17	Door, 11.13 x 7.5
17.	967987-18	Door, 11.13 x 7.5
18.	967987-19	Door, 11.13 x 7.5
19.	967987-20	Door, 25.13 x 10.88
20.	967987-21	Panel, 11.13 x 7.5
21.	967987-22	Panel, 26 x 9.81
22.	967987-30	Panel, 12 x 3
23.	967987-31	Panel, 23.5 x 2.5
24.	967987-34	Panel, 26 x 18.25
	968024	Insert, Cutlery drawer
	382029-05	Handle bar, 21.33
	381228-02	Catch, Grabber door (5lb pull)
	203440	T-molding, Black Embossed
	382203-03	Drawer slide, 15”
	382203-06	Clips, Front fixing (Pr.)

2018 INTERNATIONAL
FURNITURE, GALLEY

Galley Cabinet, Oven Section, 25’ Serenity

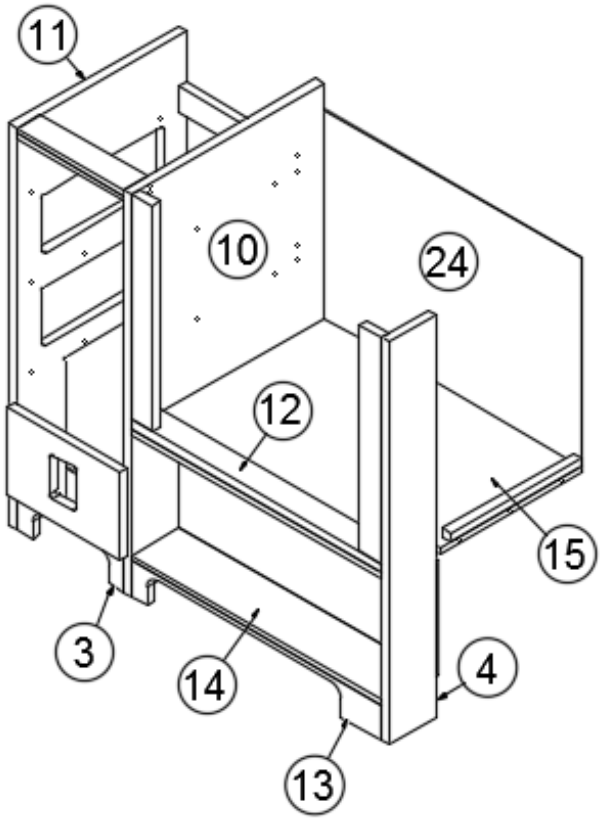

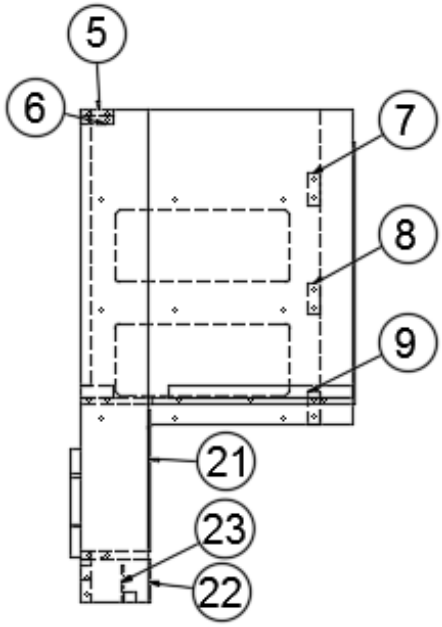

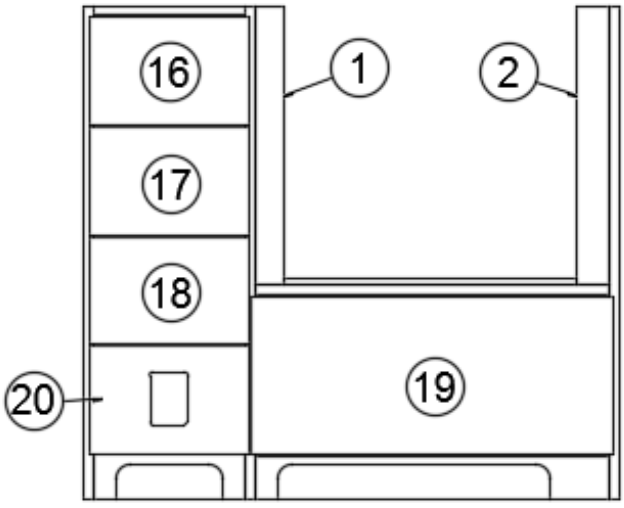

Parts Listed on Next Page

Galley Cabinet, Oven Section, 25’ Serenity

	967987-15	Galley Oven Section
1.	967987-151	Panel, 2.01 x 19.25
2.	967987-152	Panel, 2.24 x 19.25
3.	967987-153	Panel, 3.5 x 10.5
4.	967987-4	Panel, 4.69 x 34.25
5.	967987-5	Panel, 2.25 x 10.5
6.	967987-6	Panel, 2.25 x 10.5
7.	967987-7	Panel, 2.25 x 10.5
8.	967987-8	Panel, 2.25 x 10.5
9.	967987-9	Panel, 2.25 x 10.5
10.	967987-10	Panel, 18.88 x 34.25
11.	967987-11	Panel, 16.44 x 34.25
12.	967987-12	Panel, 2.25 x 24.5
13.	967987-1514	Panel, 3 x 24
14.	967987-15I	Panel, 4.69 x 24.5
15.	967987-16	Panel, 18.88 x 25.25
16.	967987-1517	Door, 11.13 x 7.5
17.	967987-1518	Door, 11.13 x 7.5
18.	967987-1519	Door, 11.13 x 7.5
19.	967987-1520	Door, 25.13 x 10.88
20.	967987-1521	Panel, 11.13 x 7.5
21.	967987-22	Panel, 26 x 9.81
22.	967987-30	Panel, 12 x 3
23.	967987-31	Panel, 23.5 x 2.5
24.	967987-1534	Panel, 26 x 18.25
	968024	Insert, Cutlery drawer
	382029-05	Handle bar, 21.33”
	381228-02	Catch, Grabber door (5lb pull)
	203693	T-molding, Beige Embossed
	382203-03	Drawer slide, 15”
	382203-06	Front fixing clips (Pr.)

Galley Top, 25FB

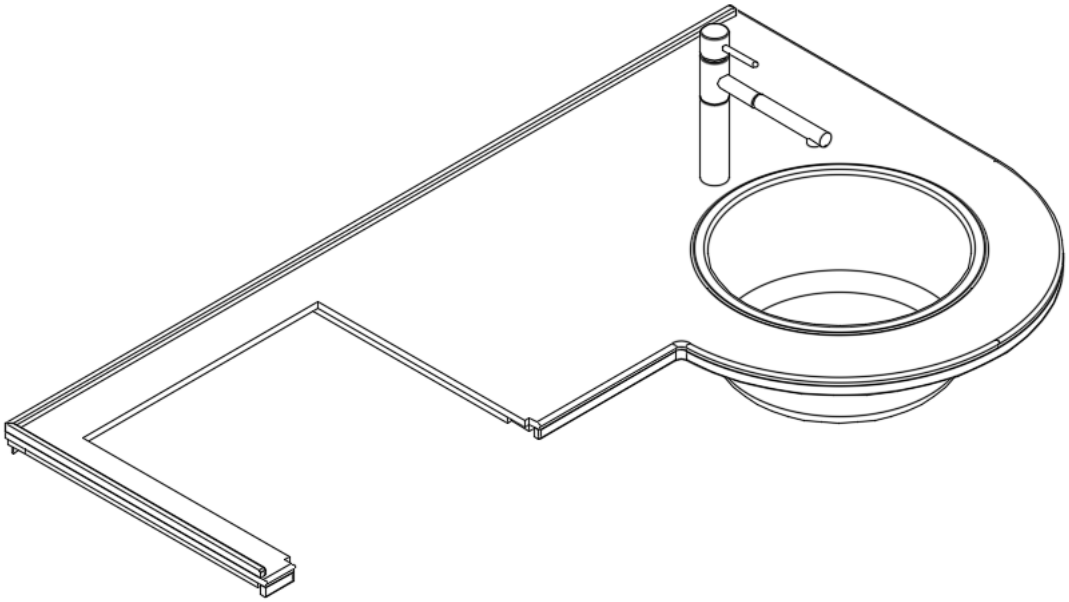

967990-01	Galley Top, Signature
967990-02	Galley Top, Serenity
602353-01	Top, Corian, Ecru, Signature
602353-06	Top, Corian, Sorrel, Serenity
601806	Galley sink, Round, SS
602549	Galley faucet, Pull-out, Chrome

2018 INTERNATIONAL
FURNITURE, GALLEY

Galley Cabinet, Oven Section, 25FB Signature

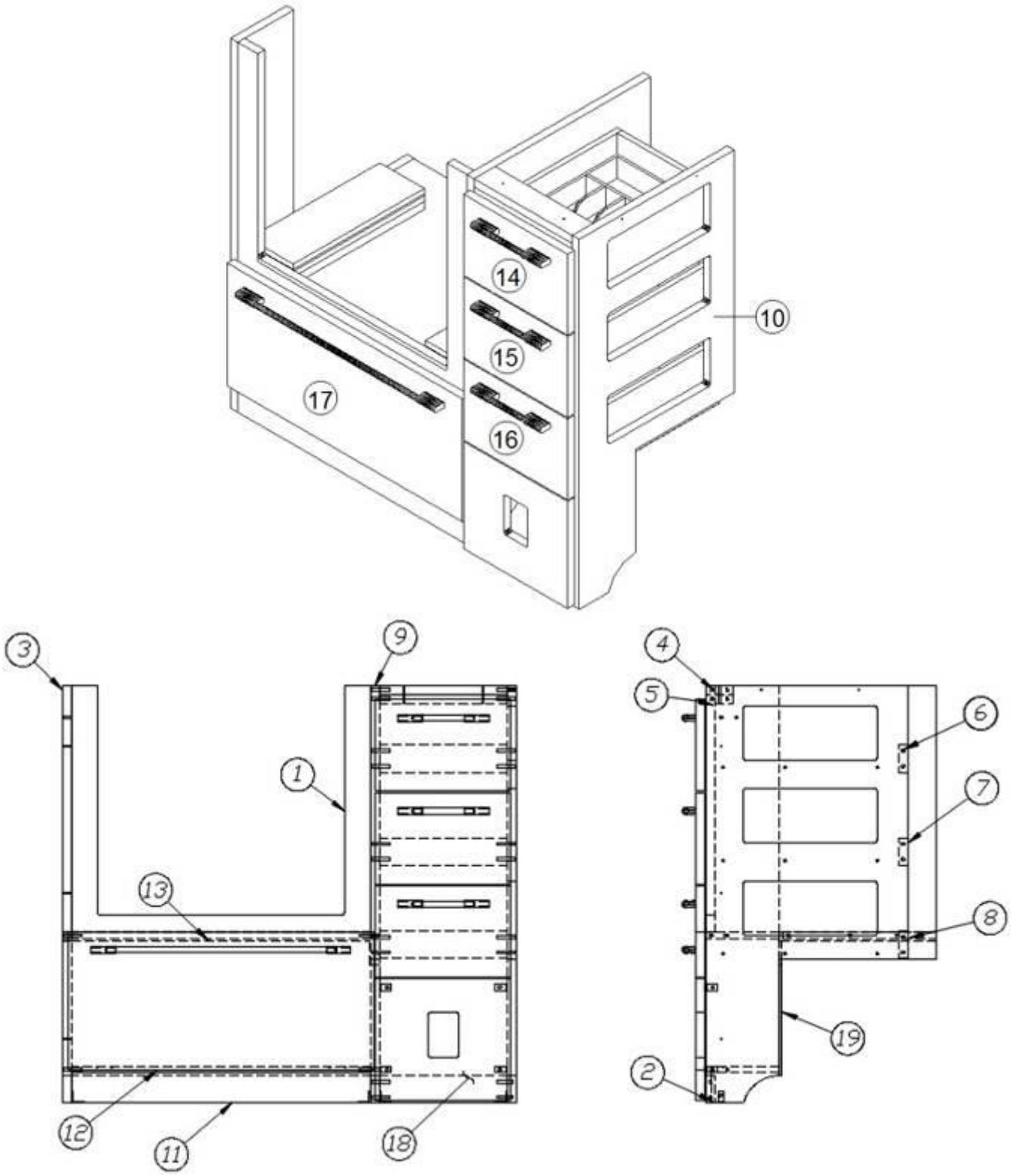

Parts Listed on Next Page

Galley Cabinet, Oven Section, 25FB Signature

	967992	Galley Oven Section
1.	967992-2	Panel, 24.5 x 20.25
2.	967992-3	Panel, 10.5 x 2.25
3.	967992-4	Panel, 6 x 34.25
4.	967992-5	Panel, 2.25 x 10.5
5.	967992-6	Panel, 2.25 x 10.5
6.	967992-7	Panel, 2.25 x 10.5
7.	967992-8	Panel, 2.25 x 10.5
8.	967992-9	Panel, 2.25 x 10.5
9.	967992-10	Panel, 18.88 x 34.25
10.	967992-11	Panel, 16.56 x 34.25
11.	967992-14	Panel, 24.5 x 3
12.	967992-15I	Panel, 6 x 24.5
13.	967992-16	Panel, 18.88 x 25.25
14.	967992-17	Door, 11.13 x 7.5
15.	967992-18	Door, 11.13 x 7.5
16.	967992-19	Door, 11.13 x 7.5
17.	967992-20	Door, 25.13 x 11.38
18.	967992-21	Panel, 11.13 x 9.92
19.	967992-22	Panel, 26 x 11.06
	382029-00	Handle bar, 7.48”
	382029-05	Handle bar, 21"
	968020-02	Drawer box, 5" x 15”
	381607-11	Hinge, Self-close
	381228-02	Catch, Grabber door (5lb Pull)
	382203-03	Drawer slide, Self-close, 15” (Pair)
	382203-06	Front fixing clip (Pair)
	968024	Insert, Cutlery drawer

2018 INTERNATIONAL
FURNITURE, GALLEY

Galley Cabinet, Oven Section, 25FB Serenity

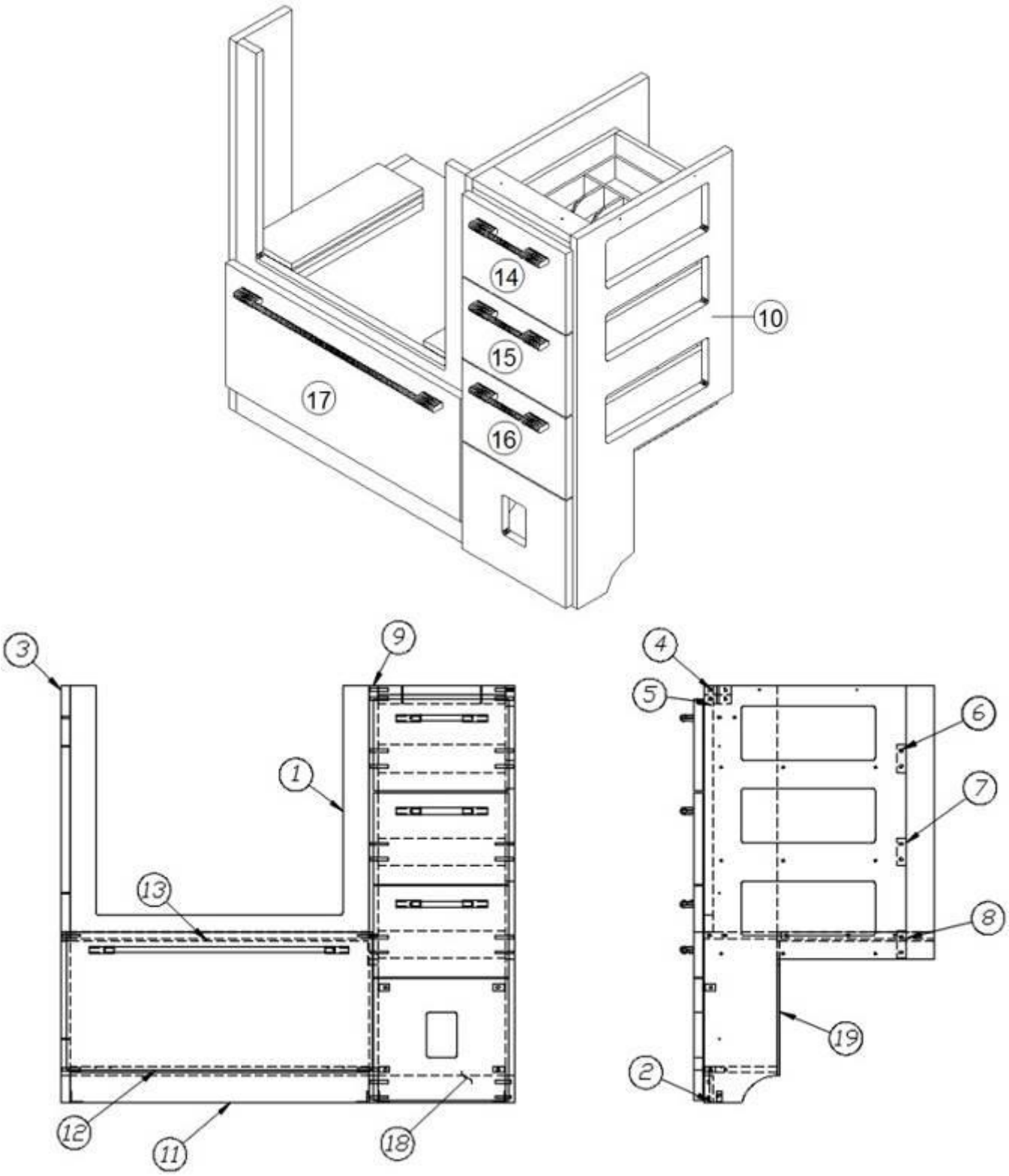

Parts Listed on Next Page

Galley Cabinet, Oven Section, 25FB Serenity

	967992-15	Galley Oven Section
1.	967992-152	Panel, 24.5 x 20.25
2.	967992-153	Panel, 10.5 x 2.25
3.	967992-4	Panel, 6 x 34.25
4.	967992-5	Panel, 2.25 x 10.5
5.	967992-6	Panel, 2.25 x 10.5
6.	967992-7	Panel, 2.25 x 10.5
7.	967992-8	Panel, 2.25 x 10.5
8.	967992-9	Panel, 2.25 x 10.5
9.	967992-10	Panel, 18.88 x 34.25
10.	967992-11	Panel, 16.56 x 34.25
11.	967992-1514	Panel, 24.5 x 3
12.	967992-15I	Panel, 6 x 24.5
13.	967992-16	Panel, 18.88 x 25.25
14.	967992-1517	Door, 11.13 x 7.5
15.	967992-1518	Door, 11.13 x 7.5
16.	967992-1519	Door, 11.13 x 7.5
17.	967992-1520	Door, 25.13 x 11.38
18.	967992-1521	Panel, 11.13 x 9.92
19.	967992-22	Panel, 26 x 11.06
	382044	Handle, Brushed Nickel
	382115	Pull, Flat Black
	381228-02	Catch, Grabber door (5lb Pull)
	968020-02	Drawer box, Self-close, 5” x 15”
	381607-11	Hinge, Self-close
	382203-03	Drawer slide, Self-close, 15” (Pair)
	382203-06	Front fixing clips (Pr)
	968024	Insert, Cutlery drawer

2018 INTERNATIONAL
FURNITURE, GALLEY

Galley Cabinet, Microwave Option, 25FB Signature

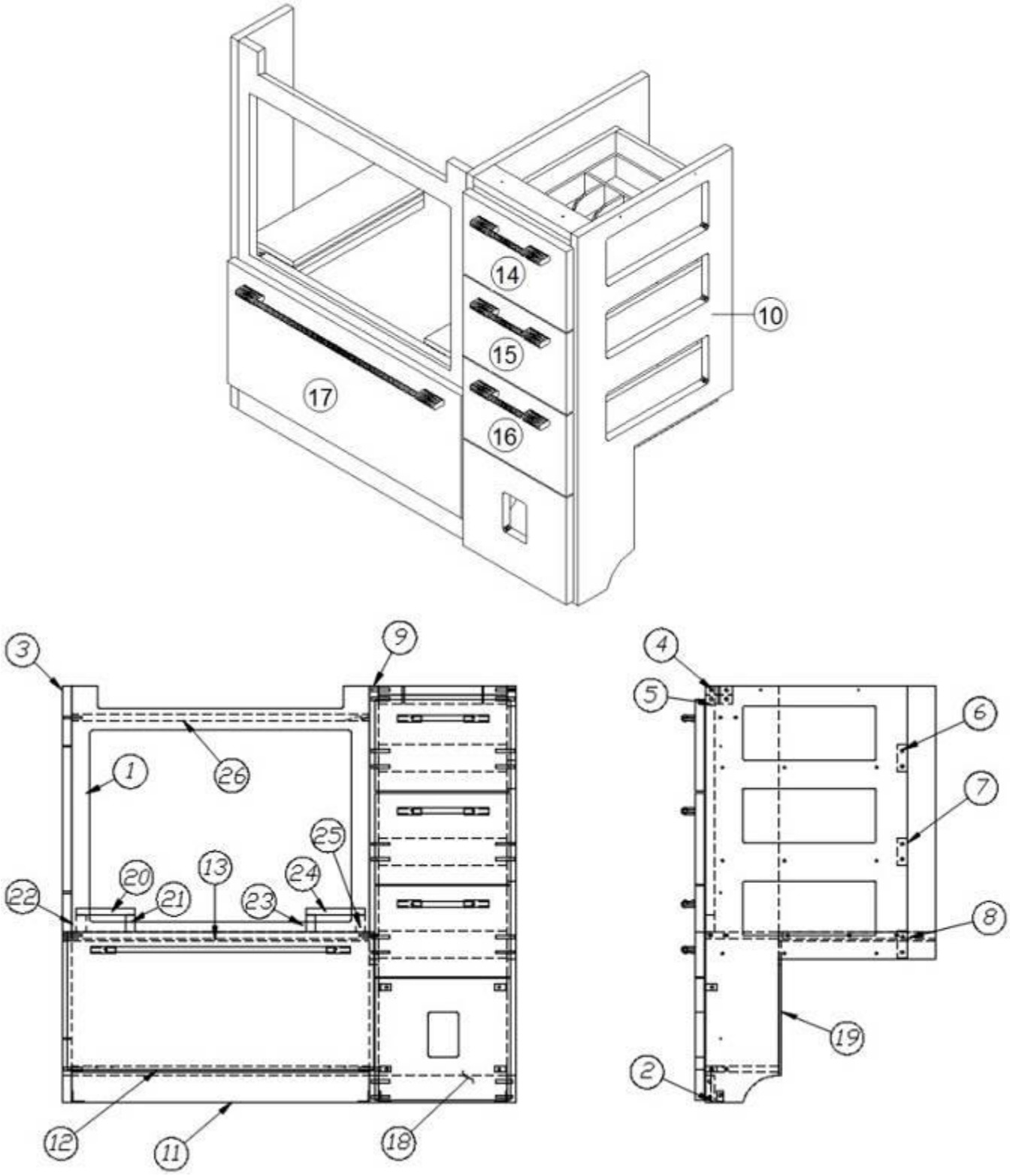

Parts Listed on Next Page

2018 INTERNATIONAL
FURNITURE, GALLEY

Galley Cabinet, Microwave Option, 25FB Signature

	967992-04	Galley Microwave Option Section
1.	967992-0444	Panel, 24.5 x 20.25
2.	967992-3	Panel, 10.5 x 2.25
3.	967992-4	Panel, 6 x 34.25
4.	967992-5	Panel, 2.25 x 10.5
5.	967992-6	Panel, 2.25 x 10.5
6.	967992-7	Panel, 2.25 x 10.5
7.	967992-8	Panel, 2.25 x 10.5
8.	967992-9	Panel, 2.25 x 10.5
9.	967992-10	Panel, 18.88 x 34.25
10.	967992-11	Panel, 16.56 x 34.25
11.	967992-14	Panel, 24.5 x 3
12.	967992-15I	Panel, 6 x 24.5
13.	967992-16	Panel, 18.88 x 25.25
14.	967992-17	Door, 11.13 x 7.5
15.	967992-18	Door, 11.13 x 7.5
16.	967992-19	Door, 11.13 x 7.5
17.	967992-20	Door, 25.13 x 11.38
18.	967992-21	Panel, 11.13 x 9.92
19.	967992-22	Panel, 26 x 11.06
20.	967992-33	Panel, 4.75 x 14
21.	967992-34	Panel, 1.13 x 14
22.	967992-35	Panel, 1.13 x 14
23.	967992-36	Panel, 1.13 x 14
24.	967992-37	Panel, 4.75 x 14
25.	967992-38	Panel, 1.13 x 14
26.	967992-39	Panel, 24.5 x 17.13
	382029-00	Handle bar, 7.48”
	382029-05	Handle bar, 21"
	968020-02	Drawer box, 5" x 15”
	381607-11	Hinge, Self-close
	381228-02	Catch, Grabber door (5lb Pull)
	382203-03	Drawer slide, Self-close, 15” (Pair)
	382203-06	Front fixing clip (Pair)
	968024	Insert, Cutlery drawer

2018 INTERNATIONAL
FURNITURE, GALLEY

Galley Cabinet, Microwave Option, 25FB Serenity

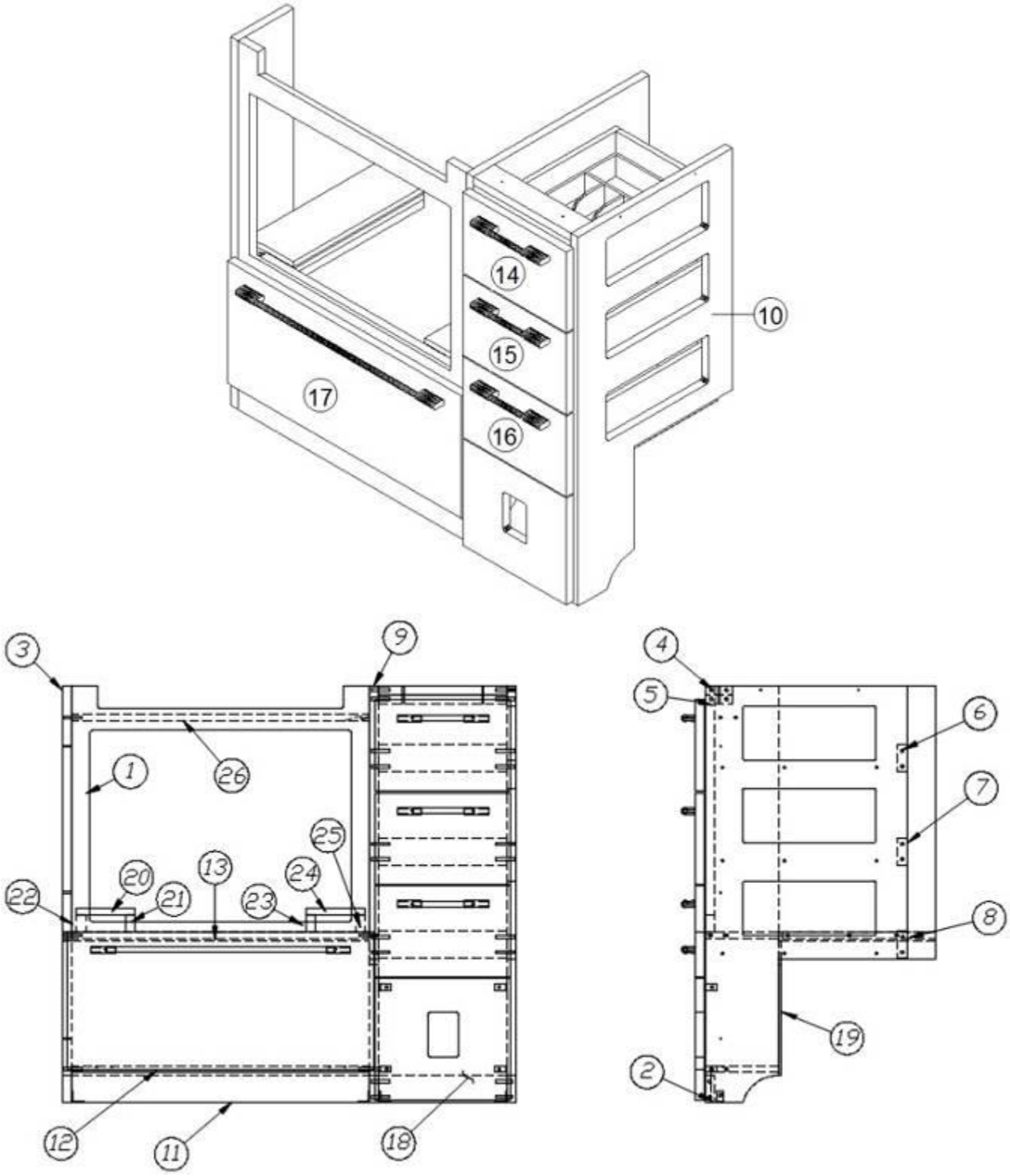

Parts Listed on Next Page

Galley Cabinet, Microwave Option, 25FB Serenity

	967992-1504	Galley Microwave Option Section
1.	967992-1544	Panel, 24.5 x 20.25
2.	967992-153	Panel, 10.5 x 2.25
3.	967992-4	Panel, 6 x 34.25
4.	967992-5	Panel, 2.25 x 10.5
5.	967992-6	Panel, 2.25 x 10.5
6.	967992-7	Panel, 2.25 x 10.5
7.	967992-8	Panel, 2.25 x 10.5
8.	967992-9	Panel, 2.25 x 10.5
9.	967992-10	Panel, 18.88 x 34.25
10.	967992-11	Panel, 16.56 x 34.25
11.	967992-1514	Panel, 24.5 x 3
12.	967992-15I	Panel, 6 x 24.5
13.	967992-16	Panel, 18.88 x 25.25
14.	967992-1517	Door, 11.13 x 7.5
15.	967992-1518	Door, 11.13 x 7.5
16.	967992-1519	Door, 11.13 x 7.5
17.	967992-1520	Door, 25.13 x 11.38
18.	967992-1521	Panel, 11.13 x 9.92
19.	967992-22	Panel, 26 x 11.06
20.	967992-33	Panel, 4.75 x 14
21.	967992-34	Panel, 1.13 x 14
22.	967992-35	Panel, 1.13 x 14
23.	967992-36	Panel, 1.13 x 14
24.	967992-37	Panel, 4.75 x 14
25.	967992-38	Panel, 1.13 x 14
26.	967992-39	Panel, 24.5 x 17.13
	382044	Handle, Brushed Nickel
	382115	Pull, Flat Black
	381228-02	Catch, Grabber door (5lb Pull)
	968020-02	Drawer box, Self-close, 5” x 15”
	381607-11	Hinge, Self-close
	382203-03	Drawer slide, Self-close, 15” (Pair)
	382203-06	Front fixing clips (Pr)
	968024	Insert, Cutlery drawer

2018 INTERNATIONAL
FURNITURE, GALLEY

Galley Cabinet, Aft Section, 25FB Signature

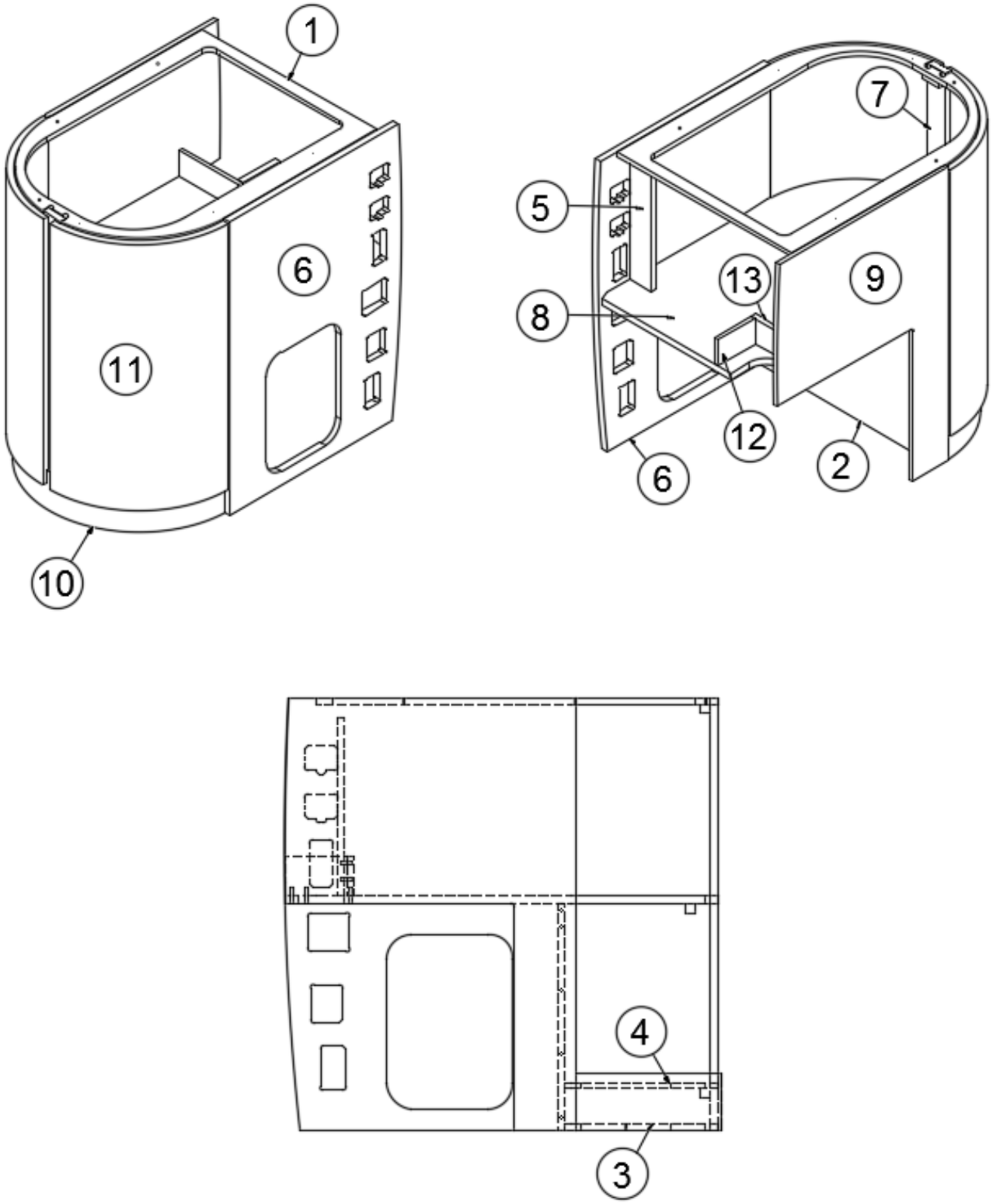

Parts Listed on Next Page

Galley Cabinet, Aft Section, 25FB Signature

	967991	Galley Aft Section
1.	967991-1	Panel, 23.5 x 33.94
2.	967991-2	Panel, 23.54 x 17.88
3.	967991-3	Panel, 23.27 x 12.18
4.	967991-4	Panel, 23.27 x 12.18
5.	967991-5	Panel, 3 x 14
6.	967991-6	Panel, 23.04 x 34.25
7.	967991-7	Panel, 2.4 x 34.25
8.	967991-8	Panel, 23.5 x 34.4
9.	967991-9	Panel, 23.04 x 34.25
10.	115309	Toe kick, Aluminum
11.	801787-0124	Door, 16.26 x 31, Ebony
12.	967991-32	Panel, 3 x 5
13.	967991-33	Panel, 3 x 6.5
	967989-01	Galley flip shelf
	602351-01	Galley flip shelf top, Corian, Ecru
	382092	Bracket, Hinged spring
	203440	T-molding, .8125, Black Embossed
	381856	Catch, Tension 2-ball
	381607-11	Hinge, Self-close
	381808-01	Bracket, Face mount hinge
	382029-00	Handle bar, 7.48"
	203383	Magazine rack
	115042	Rod, .25", Aluminum
	203483	Sink cover, Round, 17.75"
	381708	Wastebasket

2018 INTERNATIONAL
FURNITURE, GALLEY

Galley Cabinet, Aft Section, 25FB Serenity

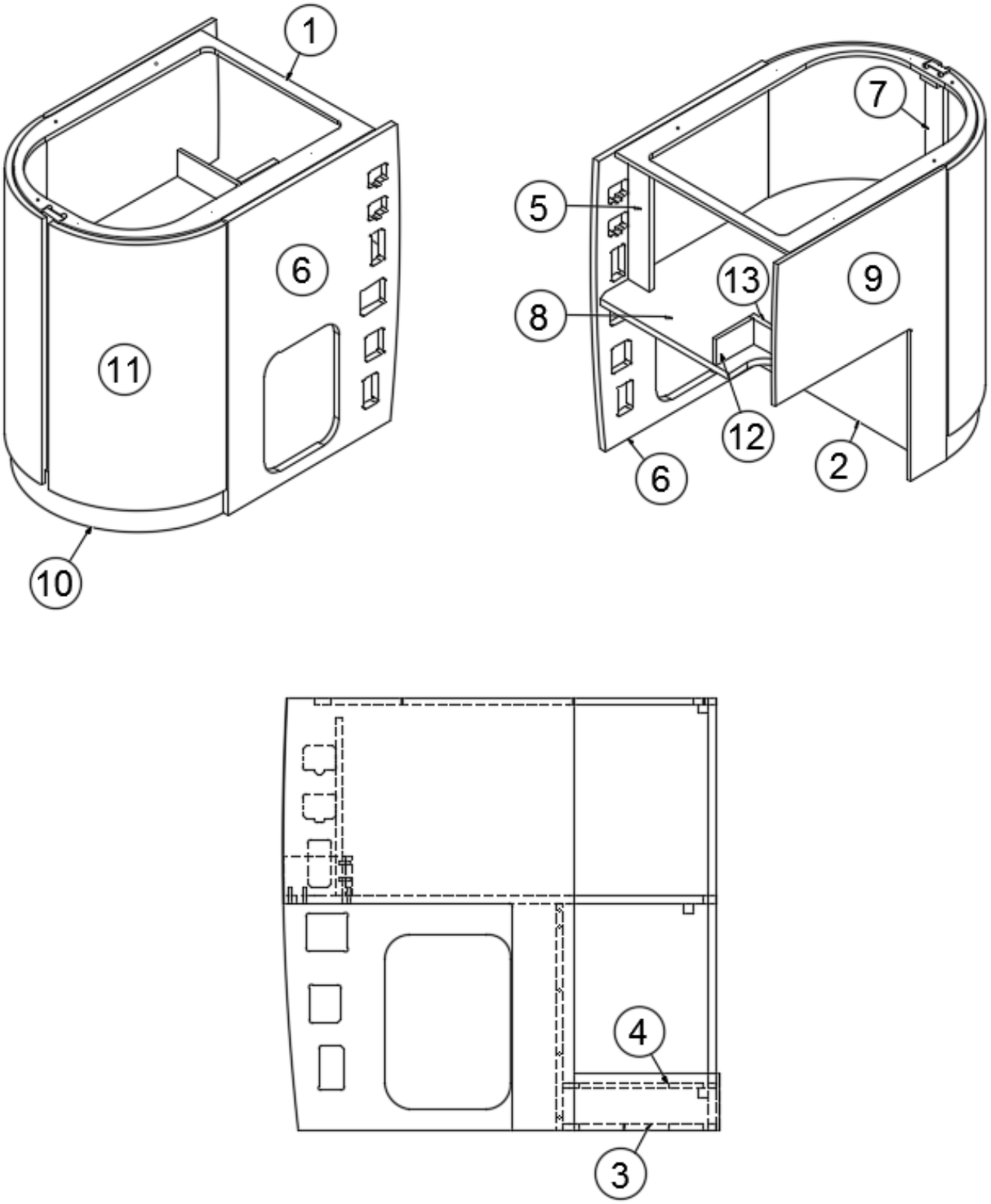

Parts Listed on Next Page

2018 INTERNATIONAL
FURNITURE, GALLEY

Galley Cabinet, Aft Section, 25FB Serenity

	967991-15	Galley Aft Section
1.	967991-1	Panel, 23.5 x 33.94
2.	967991-2	Panel, 23.54 x 17.88
3.	967991-3	Panel, 23.27 x 12.18
4.	967991-4	Panel, 23.27 x 12.18
5.	967991-5	Panel, 3 x 14
6.	967991-156	Panel, 23.04 x 34.25
7.	967991-157	Panel, 2.4 x 34.25
8.	967991-8	Panel, 23.5 x 34.4
9.	967991-159	Panel, 23.04 x 34.25
10.	115309	Toe Kick, Aluminum
11.	801787-0118	Door, 16.26 x 31, Asian Sand
12.	967991-32	Panel, 3 x 5
13.	967991-33	Panel, 3 x 6.5
	967989-02	Galley flip shelf
	602351-06	Galley flip shelf top, Corian, Sorrel
	382092	Bracket, Hinged spring
	203693	T-molding, .8125, Beige Embossed
	381607-11	Hinge, Self-close
	381808-01	Bracket, Face mount hinge
	382115	Pull, Black
	203383	Magazine rack
	115042	Rod, .25", Aluminum
	381856	Catch, Tension 2-ball
	203483	Sink cover, Round, 17.75"
	381708	Wastebasket

Galley Top, 27FB

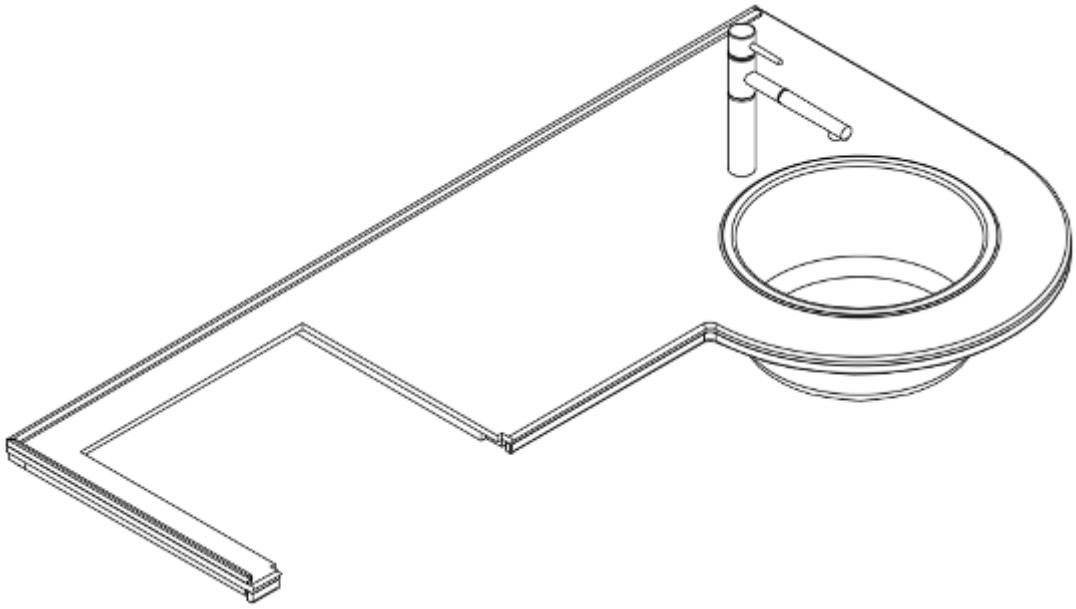

967994-01	Galley Top, Signature
967994-02	Galley Top, Serenity
602354-01	Top, Corian, Ecru, Signature
602354-06	Top, Corian, Sorrel, Serenity
601806	Galley sink, Round, SS
602549	Galley faucet, Pull-out, Chrome

2018 INTERNATIONAL
FURNITURE, GALLEY

Galley Cabinet, Oven Section, 27FB Signature

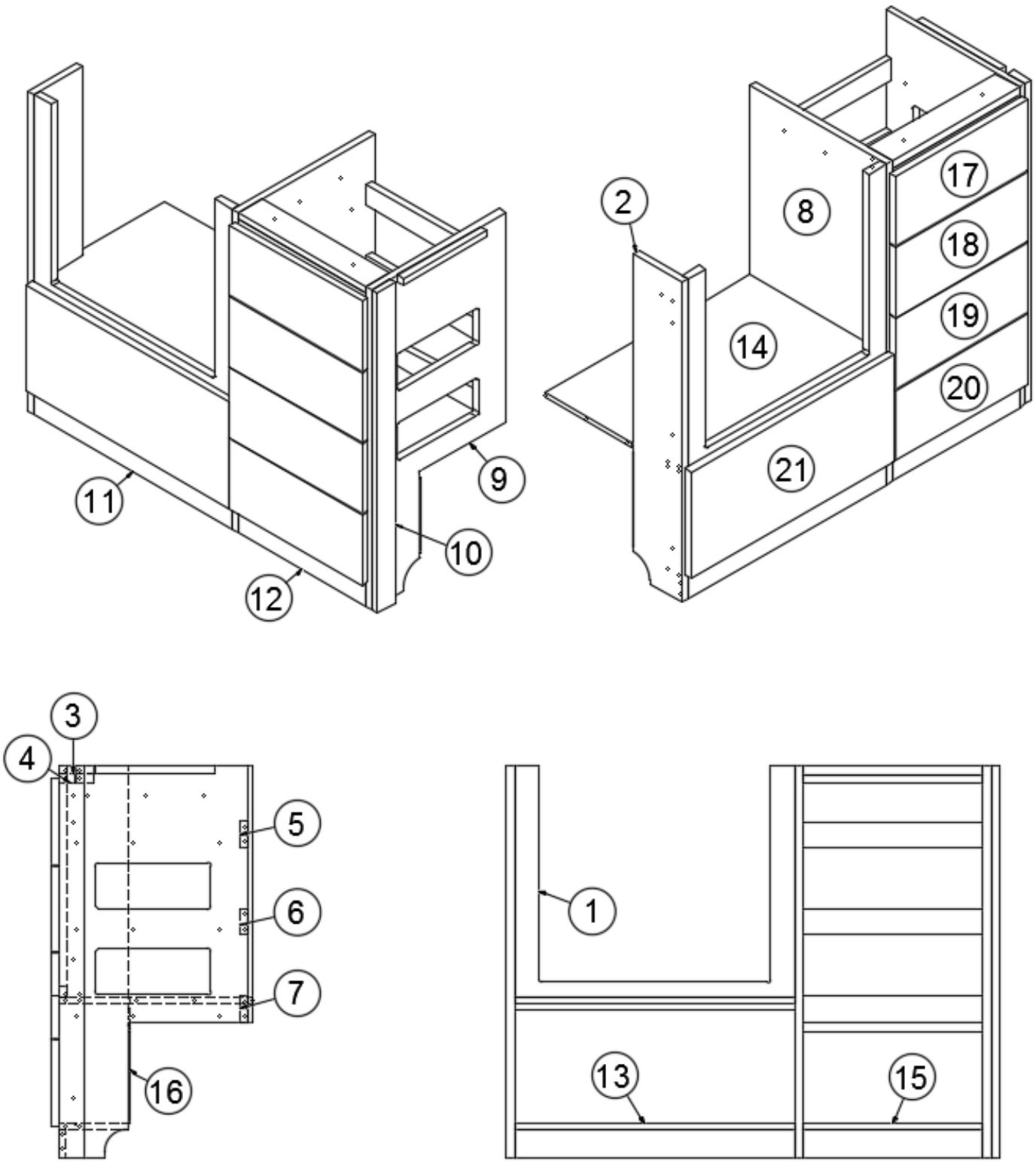

Parts Listed on Next Page

Galley Cabinet, Oven Section, 27FB Signature

	967995	Galley Standard Oven Section
1.	967995-2	Panel, 24.5 x 20.25
2.	967995-3	Panel, 6 x 34.25
3.	967995-4	Panel, 15.75 x 3
4.	967995-5	Panel, 15.75 x 3
5.	967995-6	Panel, 2.25 x 15.75
6.	967995-7	Panel, 2.25 x 15.75
7.	967995-8	Panel, 2.25 x 15.75
8.	967995-9	Panel, 16.88 x 34.25
9.	967995-10	Panel, 16.56 x 34.25
10.	967995-12	Panel, 2.25 x 34.25
11.	967995-14	Panel, 24.5 x 3.5
12.	967995-15I	Panel, 15.75 x 2.5
13.	967995-16	Panel, 6 x 24.5
14.	967995-17	Panel, 16.88 x 25.25
15.	967995-18	Panel, 6 x 15.75
16.	967995-19	Panel, 42.5 x 10
17.	967995-21	Drawer face, 16.38 x 7.5
18.	967995-22	Drawer face, 16.38 x 7.5
19.	967995-23	Drawer face, 16.38 x 7.5
20.	967995-24	Door, 16.38 x 7.5
21.	967995-25	Door, 25.13 x 11.63
	382029-04	Handle bar, 15”
	381228-02	Catch, Grabber door (5lb Pull)
	968020-04	Drawer box, Self-close, 5”
	381607-11	Hinge, Self-close
	382029-05	Handle bar, 21.33"
	382203-03	Drawer slide, Self-close, 15”
	382203-06	Front fixing clips
	115309	Toe kick, Aluminum
	968024	Insert, Cutlery drawer

2018 INTERNATIONAL
FURNITURE, GALLEY

Galley Cabinet, Oven Section, 27FB Serenity

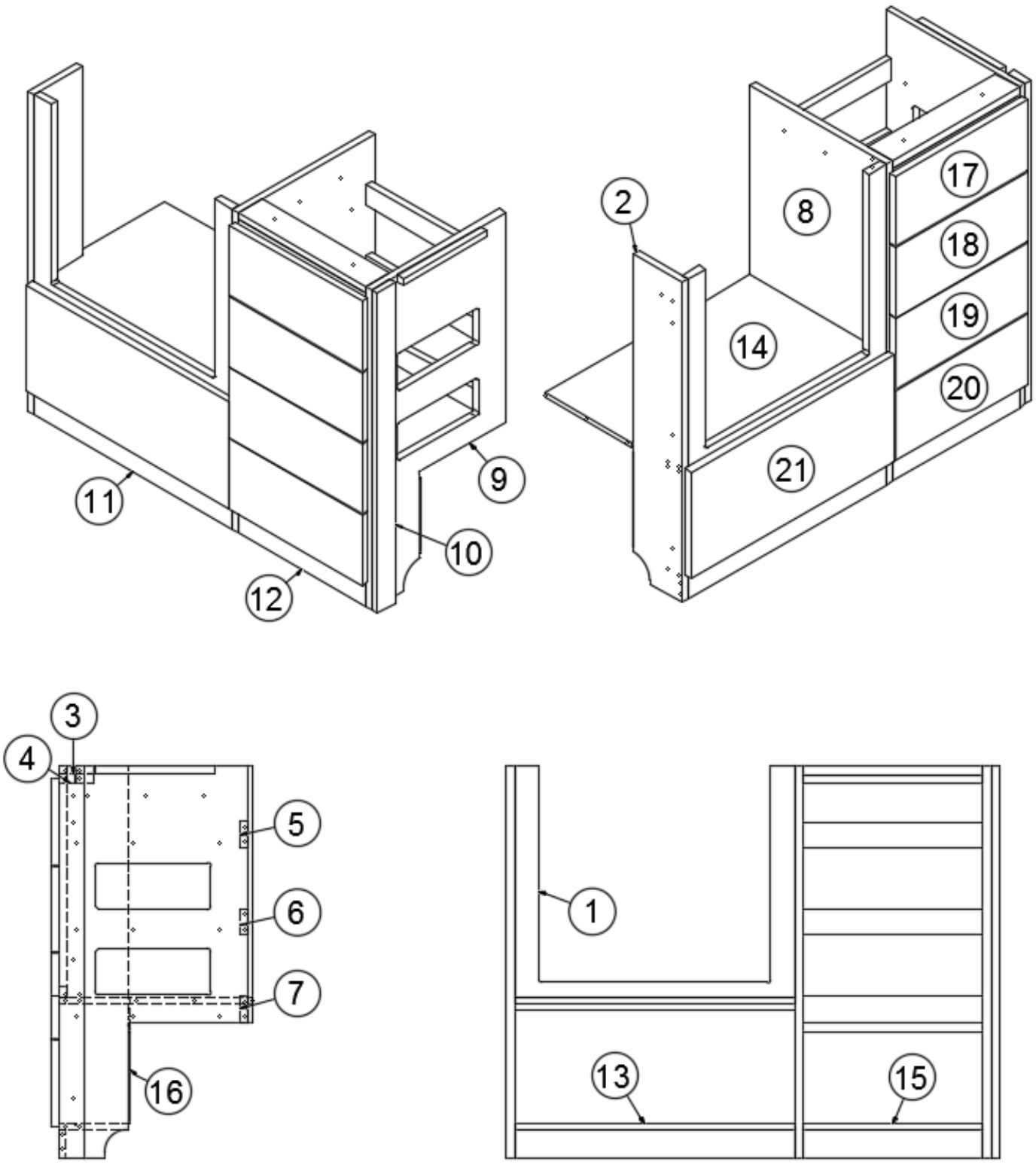

Parts Listed on Next Page

Galley Cabinet, Oven Section, 27FB Serenity

	967995-15	Galley Standard Oven Section
1.	967995-152	Panel, 24.5 x 20.25
2.	967995-3	Panel, 6 x 34.25
3.	967995-4	Panel, 15.75 x 3
4.	967995-5	Panel, 15.75 x 3
5.	967995-6	Panel, 2.25 x 15.75
6.	967995-7	Panel, 2.25 x 15.75
7.	967995-8	Panel, 2.25 x 15.75
8.	967995-9	Panel, 16.88 x 34.25
9.	967995-10	Panel, 16.44 x 34.25
10.	967995-12	Panel, 2.25 x 34.25
11.	967995-1514	Panel, 24.5 x 2.5
12.	967995-1515	Panel, 15.75 x 2.5
13.	967995-16	Panel, 6 x 24.5
14.	967995-17	Panel, 16.88 x 25.25
15.	967995-18	Panel, 6 x 15.75
16.	967995-19	Panel, 42.5 x 10
17.	967995-1521	Drawer face, 16.38 x 7.5
18.	967995-1522	Drawer face, 16.38 x 7.5
19.	967995-1523	Drawer face, 16.38 x 7.5
20.	967995-1524	Door, 16.38 x 7.5,
21.	967995-1525	Door, 25.13 x 11.63
	382115	Pull, Flat Black
	381228-02	Catch, Grabber door (5lb Pull)
	968020-04	Drawer box, Self-close, 5”
	381607-11	Hinge, Self-close
	382203-03	Drawer slide, 15”, Tandem (Pair)
	382203-06	Front fixing clips (Pair)
	115309	Toe kick, Aluminum
	968024	Insert, Cutlery drawer

2018 INTERNATIONAL
FURNITURE, GALLEY

Galley Cabinet, Microwave Option, 27FB Signature

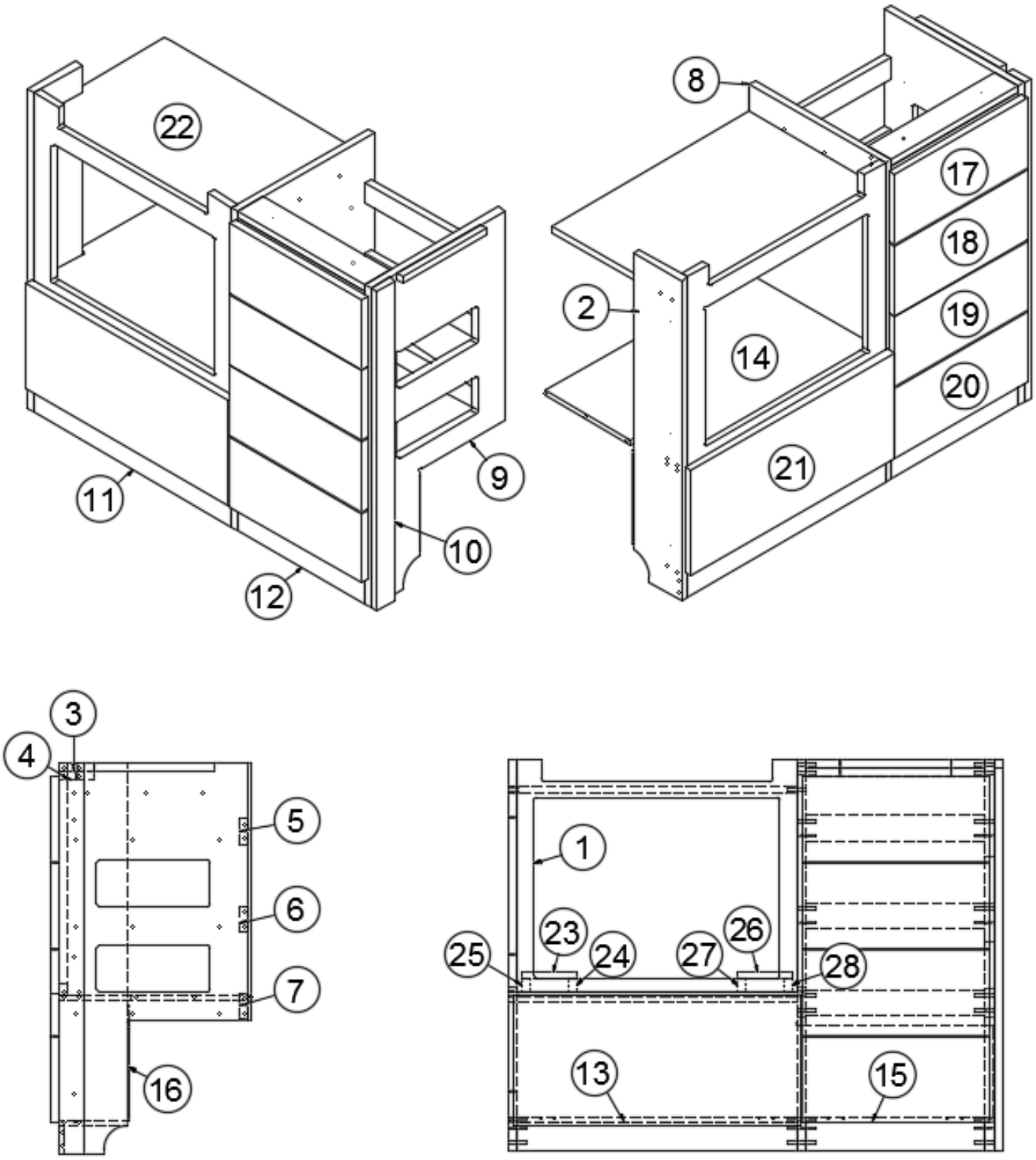

Parts Listed on Next Page

2018 INTERNATIONAL
FURNITURE, GALLEY

Galley Cabinet, Microwave Option, 27FB Signature

	967995-04	Galley Microwave Option Section
1.	967995-44	Panel, 24.5 x 20.25
2.	967995-3	Panel, 6 x 34.25
3.	967995-4	Panel, 15.75 x 3
4.	967995-5	Panel, 15.75 x 3
5.	967995-6	Panel, 2.25 x 15.75
6.	967995-7	Panel, 2.25 x 15.75
7.	967995-8	Panel, 2.25 x 15.75
8.	967995-9	Panel, 16.88 x 34.25
9.	967995-10	Panel, 16.56 x 34.25
10.	967995-12	Panel, 2.25 x 34.25
11.	967995-14	Panel, 24.5 x 3.5
12.	967995-15I	Panel, 15.75 x 2.5
13.	967995-16	Panel, 6 x 24.5
14.	967995-17	Panel, 16.88 x 25.25
15.	967995-18	Panel, 6 x 15.75
16.	967995-19	Panel, 42.5 x 10
17.	967995-21	Drawer face, 16.38 x 7.5
18.	967995-22	Drawer face, 16.38 x 7.5
19.	967995-23	Drawer face, 16.38 x 7.5
20.	967995-24	Door, 16.38 x 7.5
21.	967995-25	Door, 25.13 x 11.63
22.	967995-35	Panel, 25.25 x 16.13
23.	967995-36	Panel, 4.75 x 14
24.	967995-37	Panel, 1.15 x 14
25.	967995-38	Panel, 1.15 x 14
26.	967995-39	Panel, 4.75 x 14
27.	967995-40	Panel, 1.15 x 14
28.	967995-41	Panel, 1.15 x 14
	382029-04	Handle bar, 15”
	381228-02	Catch, Grabber door (5lb Pull)
	968020-04	Drawer box, Self-close, 5”
	381607-11	Hinge, Self-close
	382029-05	Handle bar, 21.33"
	382203-03	Drawer slide, Self-close, 15”
	382203-06	Front fixing clips
	115309	Toe kick, Aluminum
	968024	Insert, Cutlery drawer

2018 INTERNATIONAL
FURNITURE, GALLEY

Galley Cabinet, Microwave Option, 27FB Serenity

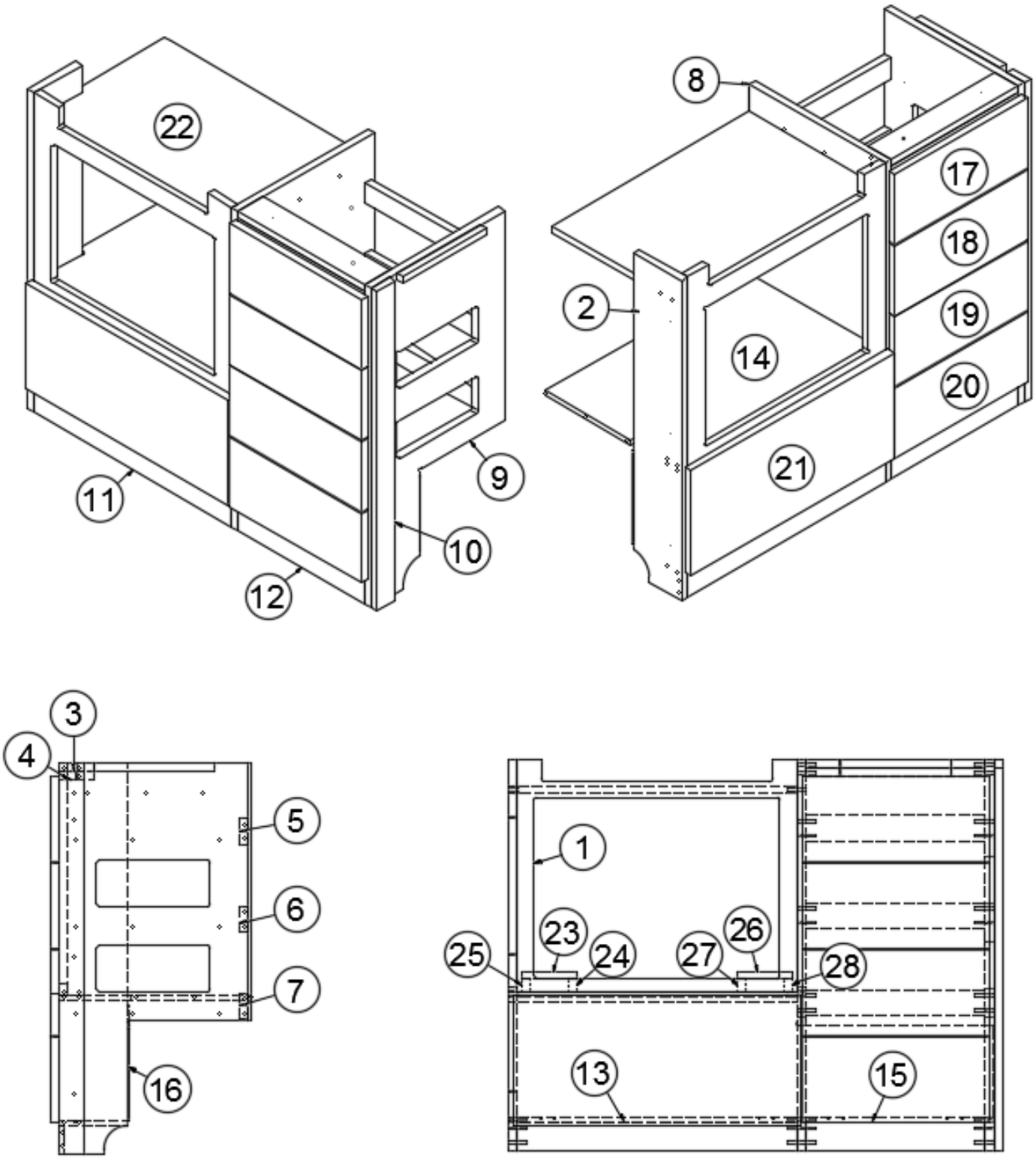

Parts Listed on Next Page

2018 INTERNATIONAL
FURNITURE, GALLEY

Galley Cabinet, Microwave Option, 27FB Serenity

	967995-0415	Galley Microwave Option Section
1.	967995-1544	Panel, 24.5 x 20.25
2.	967995-3	Panel, 6 x 34.25
3.	967995-4	Panel, 15.75 x 3
4.	967995-5	Panel, 15.75 x 3
5.	967995-6	Panel, 2.25 x 15.75
6.	967995-7	Panel, 2.25 x 15.75
7.	967995-8	Panel, 2.25 x 15.75
8.	967995-9	Panel, 16.88 x 34.25
9.	967995-10	Panel, 16.44 x 34.25
10.	967995-12	Panel, 2.25 x 34.25
11.	967995-1514	Panel, 24.5 x 2.5
12.	967995-1515	Panel, 15.75 x 2.5
13.	967995-16	Panel, 6 x 24.5
14.	967995-17	Panel, 16.88 x 25.25
15.	967995-18	Panel, 6 x 15.75
16.	967995-19	Panel, 42.5 x 10
17.	967995-1521	Drawer face, 16.38 x 7.5
18.	967995-1522	Drawer face, 16.38 x 7.5
19.	967995-1523	Drawer face, 16.38 x 7.5
20.	967995-1524	Door, 16.38 x 7.5,
21.	967995-1525	Door, 25.13 x 11.63
22.	967995-35	Panel, 25.25 x 16.13
23.	967995-36	Panel, 4.75 x 14
24.	967995-37	Panel, 1.15 x 14
25.	967995-38	Panel, 1.15 x 14
26.	967995-39	Panel, 4.75 x 14
27.	967995-40	Panel, 1.15 x 14
28.	967995-41	Panel, 1.15 x 14
	382115	Pull, Flat Black
	381228-02	Catch, Grabber door (5lb Pull)
	968020-04	Drawer box, Self-close, 5”
	381607-11	Hinge, Self-close
	382203-03	Drawer slide, 15”, Tandem (Pair)
	382203-06	Front fixing clips (Pair)
	115309	Toe kick, Aluminum
	968024	Insert, Cutlery drawer

2018 INTERNATIONAL
FURNITURE, GALLEY

Galley Cabinet, Aft Section, 27FB Signature

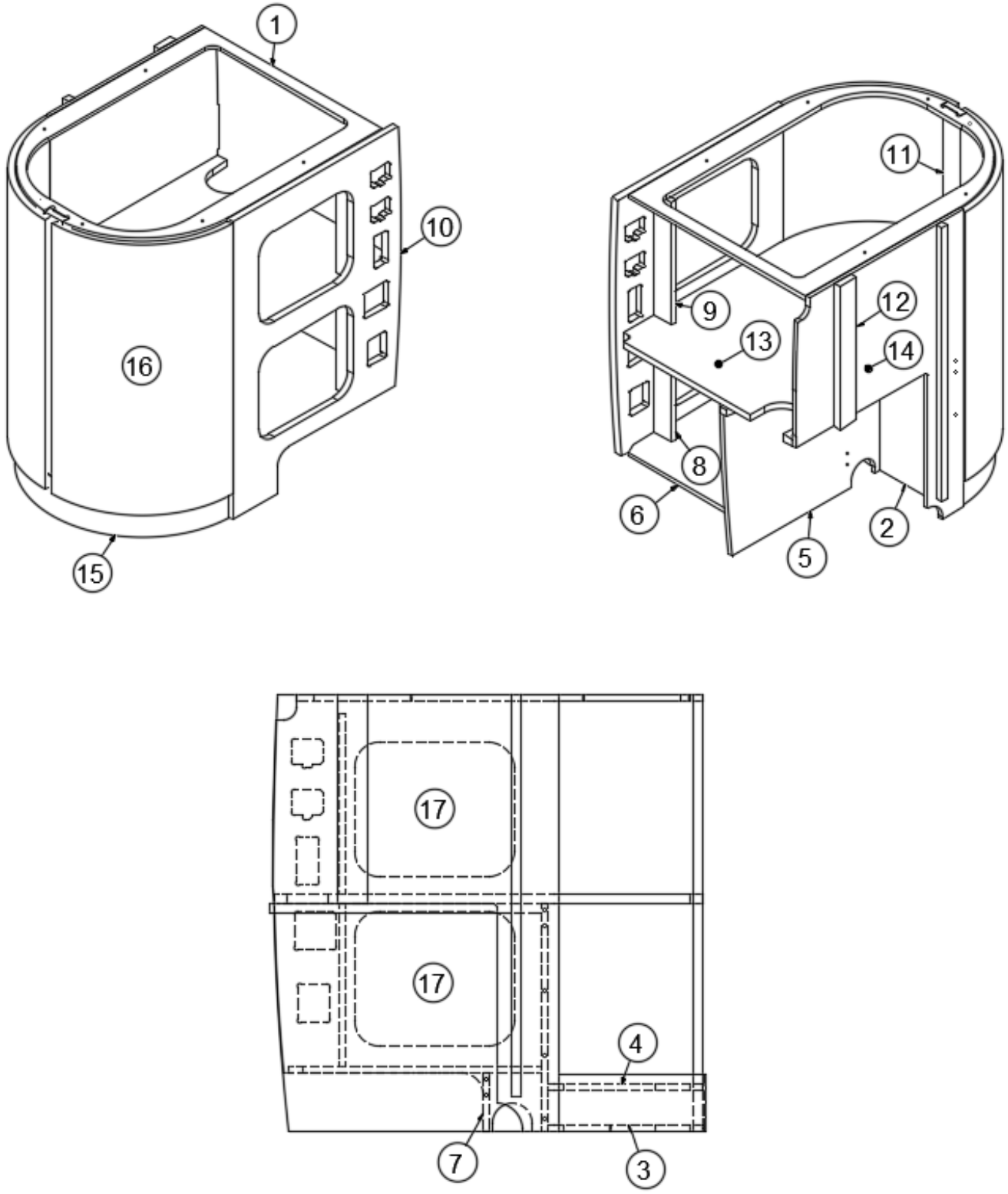

Parts Listed on Next Page

2018 INTERNATIONAL
FURNITURE, GALLEY

Galley Cabinet, Aft Section, 27FB Signature

	967996	Galley Aft Section
1.	967996-1	Panel, 23.5 x 33.44
2.	967996-2	Panel, 23.54 x 17.88
3.	967996-3	Panel, 23.27 x 12.18
4.	967996-4	Panel, 23.27 x 12.18
5.	967996-5	Panel, 17.88 x 20.82
6.	967996-6	Panel, 19.85 x 13.25
7.	967996-7	Panel, 4.63 x 13.75
8.	967996-8	Panel, 12.75 x 2.25
9.	967996-9	Panel, 14.13 x 2.25
10.	967996-10	Panel, 34.25 x 22.57
11.	967996-11	Panel, 2.4 x 34.25
12.	967996-12	Panel, 2.25 x 16.38
13.	967996-13	Panel, 23.5 x 33.62
14.	967996-14	Panel, 22.45 x 34.25
15.	115309	Toe kick, Aluminum
16.	801787-0124	Door, 16.81 x 31, Ebony
17.	371432	Door, 11.56 x 13.06
	203440	T-molding, Black Embossed .8125
	381856	Catch, Tension, 2-ball
	381654	Hinge, Black
	381707	Strike w/pull, Black
	381808-01	Bracket, Face mount hinge
	381607-11	Hinge, Self-close
	382029-05	Handle bar, 21.33"
	381708	Wastebasket
	203483	Sink cover, Round

2018 INTERNATIONAL
FURNITURE, GALLEY

Galley Cabinet, Aft Section, 27FB Serenity

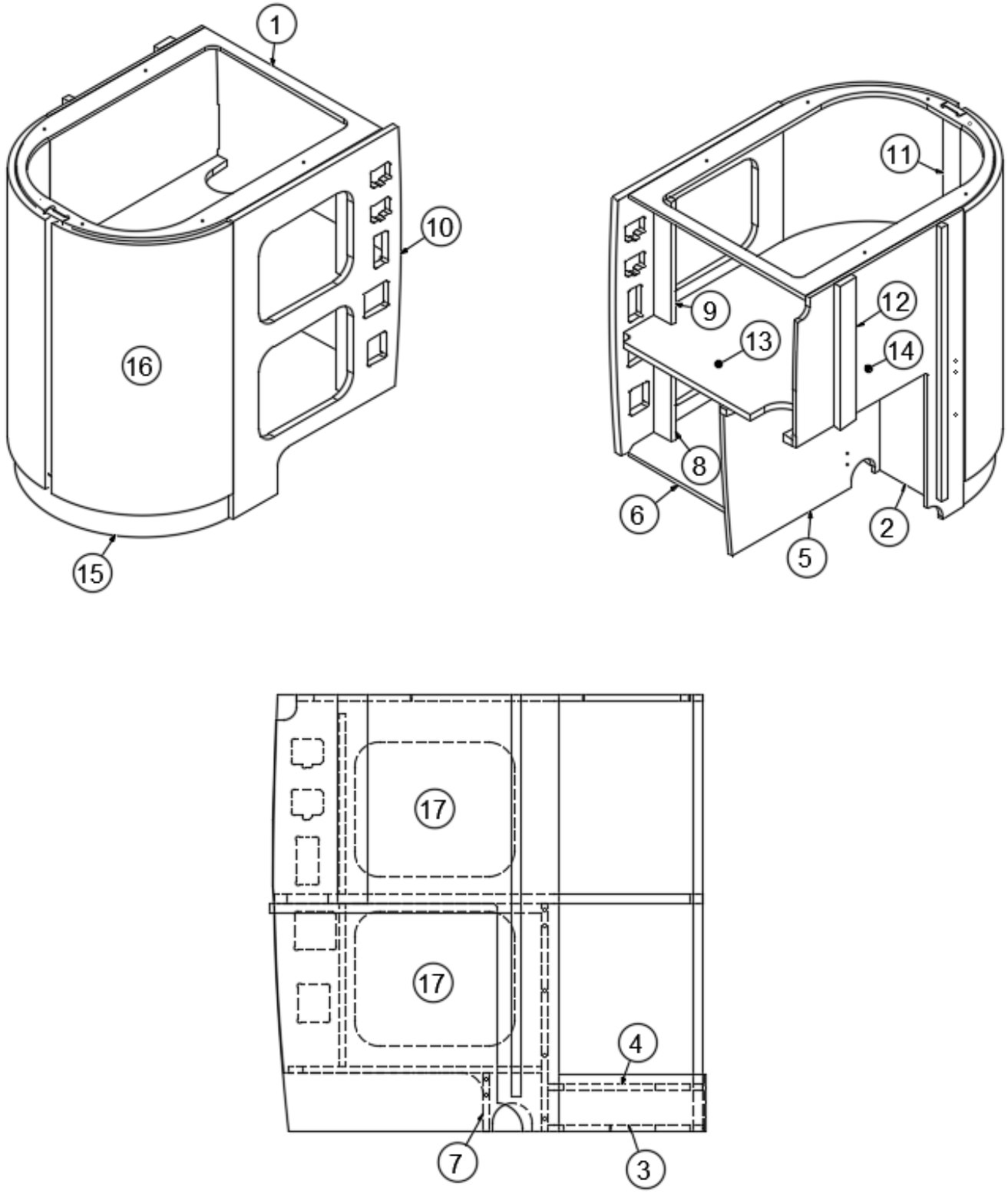

Parts Listed on Next Page

2018 INTERNATIONAL
FURNITURE, GALLEY

Galley Cabinet, Aft Section, 27FB Serenity

	967996-15	Galley Aft Section
1.	967996-1	Panel, 23.5 x 33.44
2.	967996-2	Panel, 23.54 x 17.88
3.	967996-3	Panel, 23.27 x 12.18
4.	967996-4	Panel, 23.27 x 1218
5.	967996-5	Panel, 17.88 x 20.82
6.	967996-6	Panel, 19.85 x 13.25
7.	967996-7	Panel, 4.63 x 13.75
8.	967996-8	Panel, 12.75 x 2.25
9.	967996-9	Panel, 14.13 x 2.25
10.	967996-1510	Panel, 34.25 x 22.57
11.	967996-1511	Panel, 2.40 x 34.25
12.	967996-1512	Panel, 2.25 x 16.38
13.	967996-13	Panel, 23.5 x 33.62
14.	967996-1514	Panel, 22.45 x 34.25
15.	115309	Toe kick, Aluminum
16.	801787-0118	Door, 16.97 x 31, Asian Sand
17.	371432	Door, 12.06 x 9.81
	203693	T-molding, .8125, Beige Embossed
	381856	Catch, Tension, 2-ball
	381654	Hinge, Black
	381707	Strike w/pull, Black
	381808-01	Bracket, Face mount hinge
	381607-11	Hinge, Self-close
	382115	Pull, Flat Black
	381708	Wastebasket
	203483	Sink cover, Round

2018 INTERNATIONAL
FURNITURE, GALLEY

Galley Top, 28’

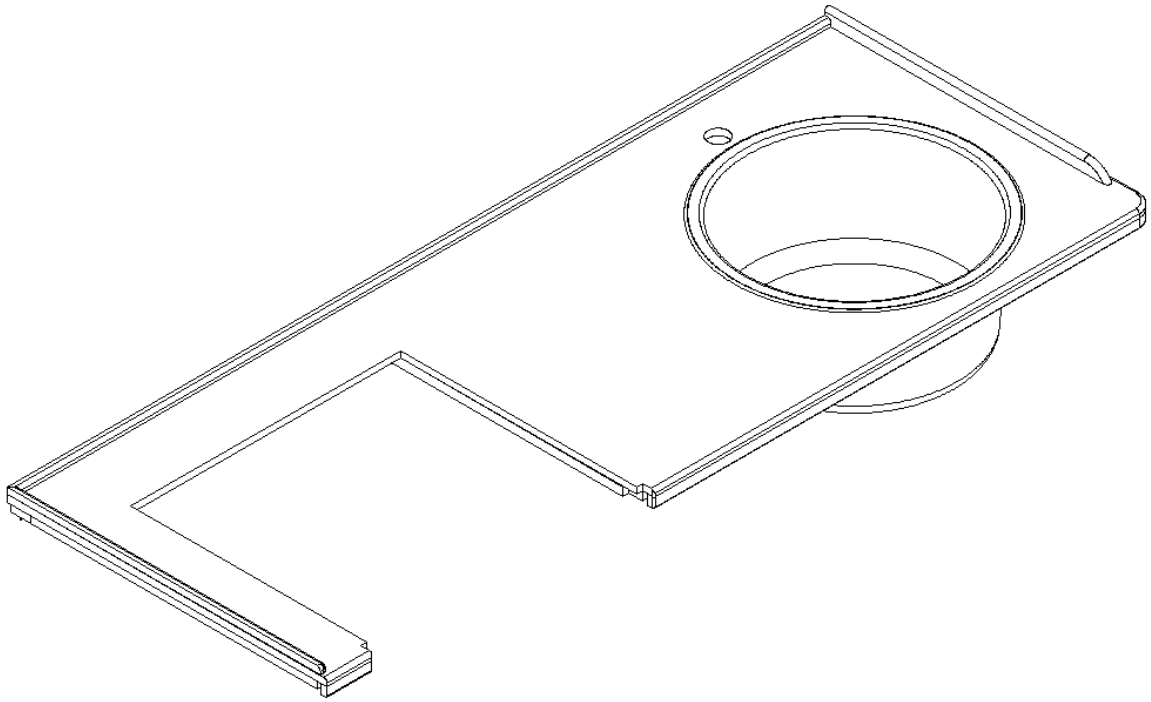

967998-01	Galley Top, Signature
967998-02	Galley Top, Serenity
602355-01	Top, Corian, Ecru, Signature
602355-06	Top, Corian, Sorrel, Serenity
601806	Galley sink, Round, SS
602549	Galley faucet, Pull-out, Chrome

2018 INTERNATIONAL
FURNITURE, GALLEY

Galley Cabinet, Standard Oven, 28’ Signature

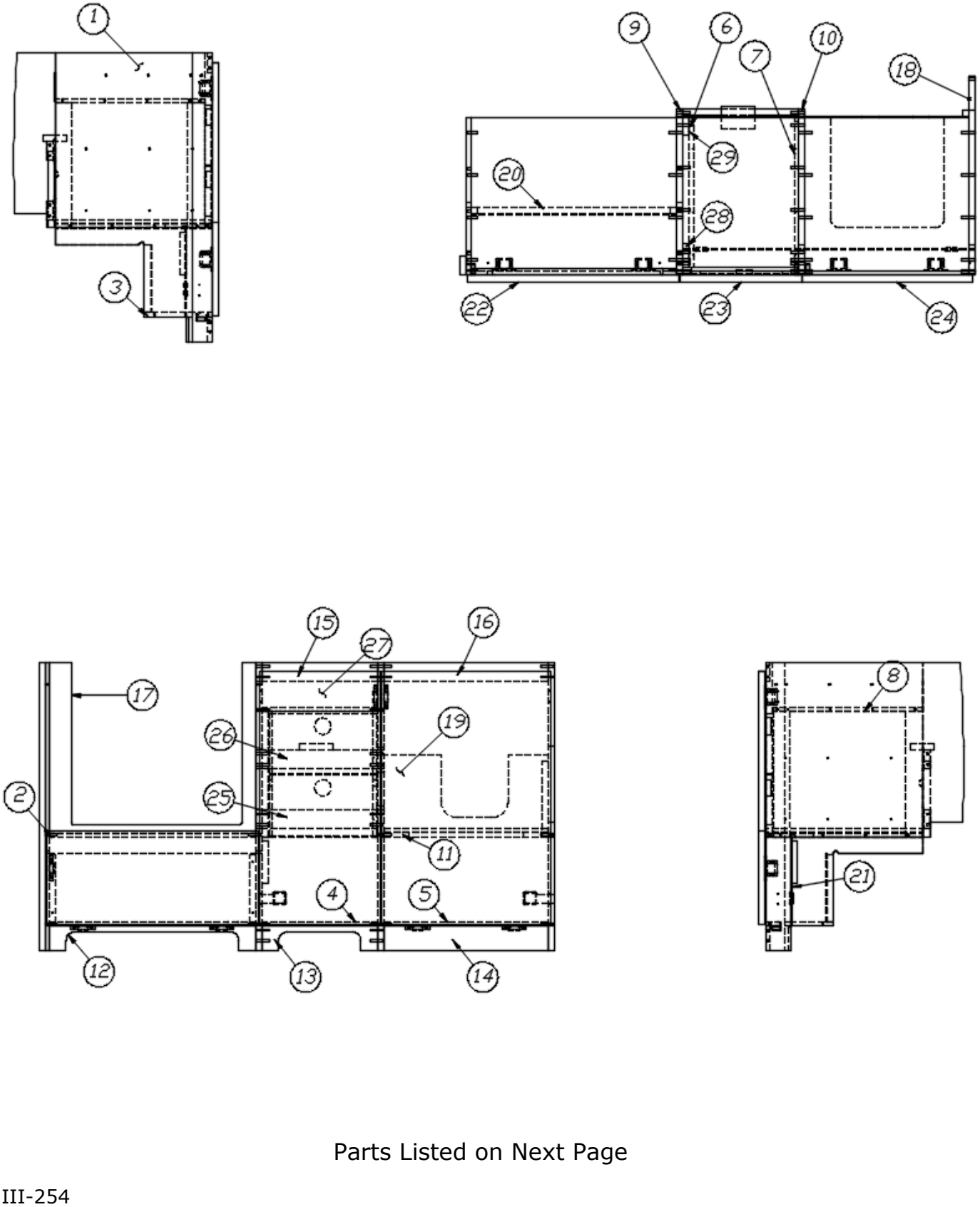

Parts Listed on Next Page

Galley Cabinet, Standard Oven, 28’ Signature

	967999	Galley Standard Oven
1.	967999-1	Panel, 18.63 x 34.25
2.	967999-2	Panel, 18.63 x 24.5
3.	967999-3	Panel, 8 x 24.5
4.	967999-4	Panel, 3 x 13.75
5.	967999-5	Panel, 3 x 19.5
6.	967999-6	Panel, 17.75 x 14.84
7.	967999-7	Panel, 17.75 x 14.84
8.	967999-8	Panel, 17.75 x 13.75
9.	967999-9	Panel, 19.63 x 34.25
10.	967999-10	Panel, 19.63 x 34.25
11.	967999-11	Panel, 18.63 x 19.5
12.	967999-12	Panel, 3 x 24.5
13.	967999-13	Panel, 3 x 13.75
14.	967999-14	Panel, 3 x 19.5
15.	967999-15I	Panel, 2.25 x 13.75
16.	967999-16	Panel, 2.25 x 19.5
17.	967999-18	Panel, 24.5 x 20.25
18.	967999-20	Panel, 23.51 x 34.25
19.	967999-21	Panel, 20.25 x 11.75
20.	967999-22	Panel, 8.06 x 24.5
21.	967999-23	Panel, 10.56 x 34.75
22.	967999-24	Door, 25.12 x 11.06
23.	967999-25	Door, 14.38 x 30
24.	967999-26	Door, 20.13 x 30
25.	967999-27	Drawer face, 12.63 x 7.17
26.	967999-28	Drawer face, 12.63 x 7.17
27.	967999-44	Panel, 3.5 x 15.25
28.	967999-42	Panel, 2 x 14.84
29.	967999-43	Panel, 2 x 14.84
	968020-06	Drawer box, Self-close, 5”
	381228-02	Catch, Grabber door (5lb Pull)
	382029-05	Handle bar, 21.33"
	380041	Brace, 1" Stanley corner
	381607-11	Hinge, Self-close
	968024	Insert, Cutlery drawer
	195329-202	Hemisphere, Clear bump-on
	203776	Plug, Square, 1.25”

2018 INTERNATIONAL
FURNITURE, GALLEY

Galley Cabinet, Standard Oven, 28’ Serenity

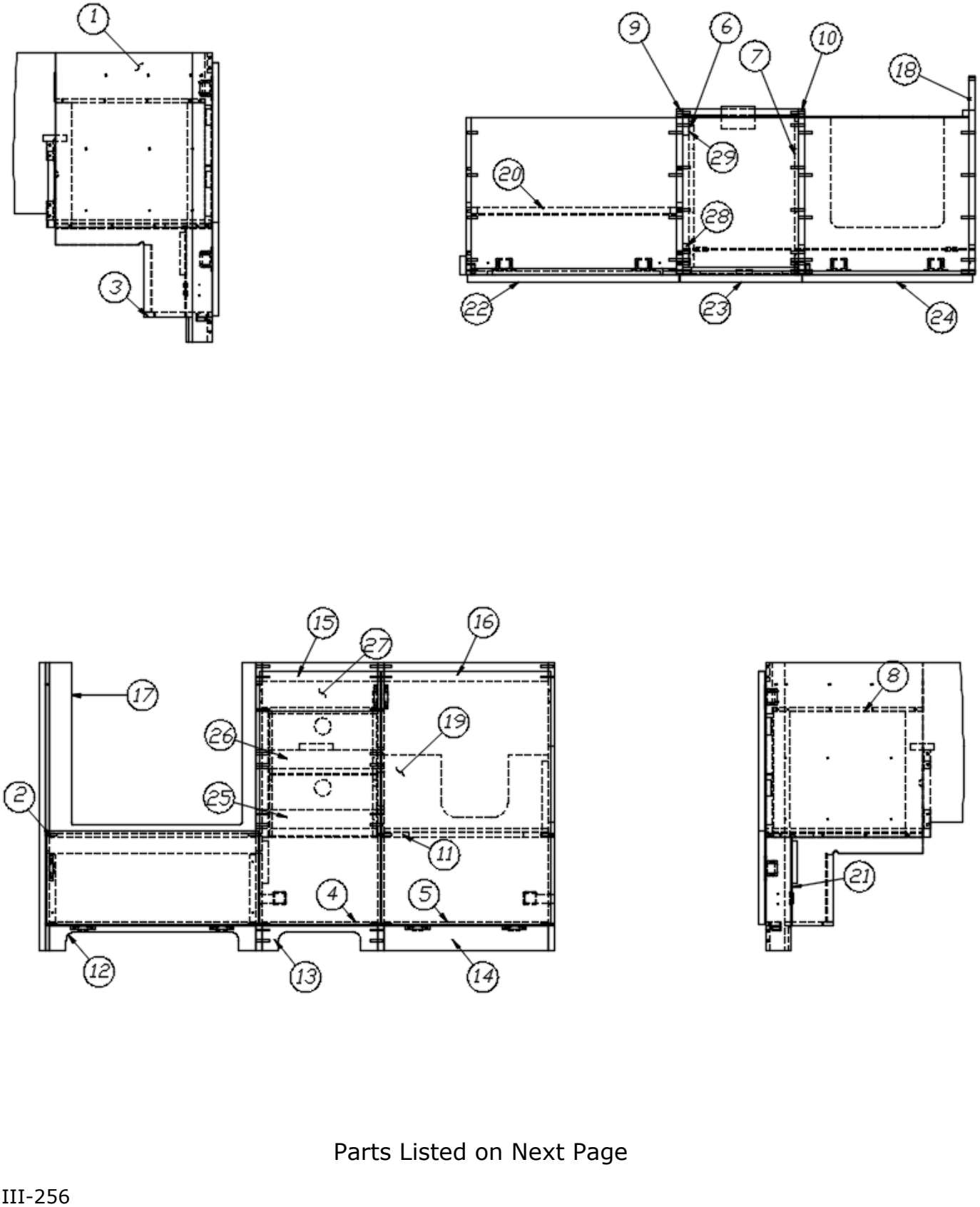

Parts Listed on Next Page

2018 INTERNATIONAL
FURNITURE, GALLEY

Galley Cabinet, Standard Oven, 28’ Serenity

	967999-15	Galley Standard Oven
1.	967999-1	Panel, 18.63 x 34.25
2.	967999-2	Panel, 18.63 x 24.5
3.	967999-3	Panel, 8 x 24.5
4.	967999-4	Panel, 3 x 13.75
5.	967999-5	Panel, 3 x 19.5
6.	967999-6	Panel, 17.75 x 14.84
7.	967999-7	Panel, 17.75 x 14.84
8.	967999-8	Panel, 17.75 x 13.75
9.	967999-9	Panel, 19.63 x 34.25
10.	967999-10	Panel, 19.63 x 34.25
11.	967999-11	Panel, 18.63 x 19.5
12.	967999-1512	Panel, 3 x 24.5
13.	967999-1513	Panel, 3 x 13.75
14.	967999-1514	Panel, 3 x 19.5
15.	967999-1515	Panel, 2.25 x 13.75
16.	967999-1516	Panel, 2.25 x 19.5
17.	967999-1518	Panel, 24.5 x 20.25
18.	967999-1520	Panel, 23.51 x 34.25
19.	967999-21	Panel, 20.25 x 11.75
20.	967999-22	Panel, 8.06 x 24.5
21.	967999-23	Panel, 10.56 x 34.75
22.	967999-1524	Door, 25.12 x 11.06
23.	967999-1525	Door, 14.38 x 30
24.	967999-1526	Door, 20.13 x 30
25.	967999-1527	Drawer face, 12.63 x 7.17
26.	967999-1528	Drawer face, 12.63 x 7.17
27.	967999-44	Panel, 3.5 x 15.25
28.	967999-1542	Panel, 2 x 14.84
29.	967999-1543	Panel, 2 x 14.84
	968020-06	Drawer box, Self-close, 5”
	382115	Pull, Flat Black
	380041	Brace, 1" Stanley corner
	381607-11	Hinge, Self-close
	381228-02	Catch, Grabber door (5lb Pull)
	968024	Insert, Cutlery drawer
	195329-202	Hemisphere, Clear bump-on
	203776	Plug, Square, 1.25”

2018 INTERNATIONAL
FURNITURE, GALLEY

Galley Cabinet, Convection Microwave Option, 28’ Signature

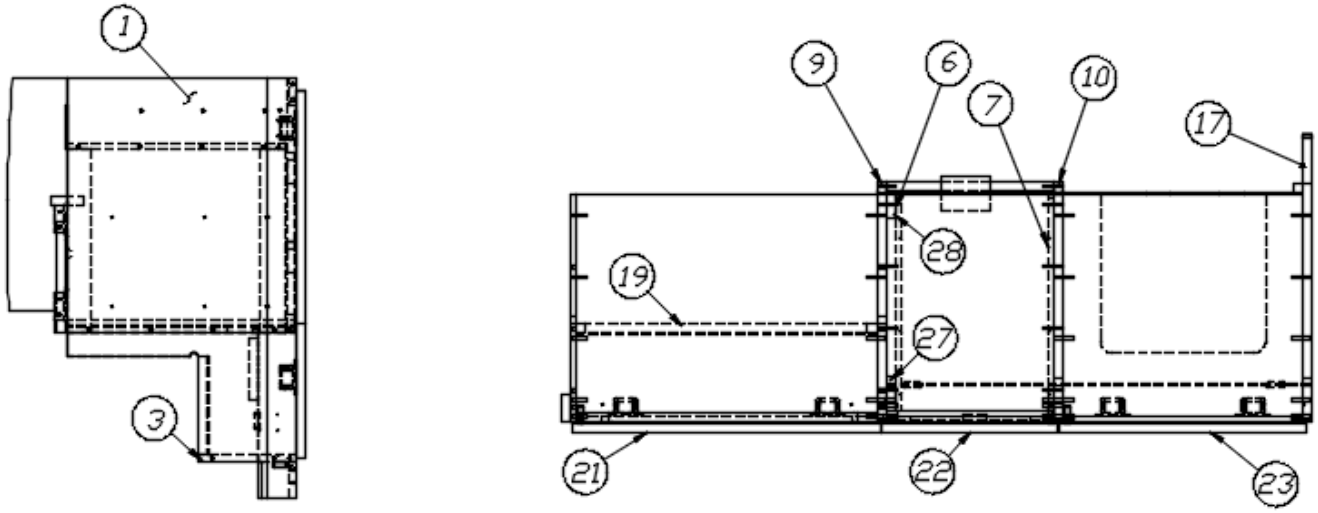

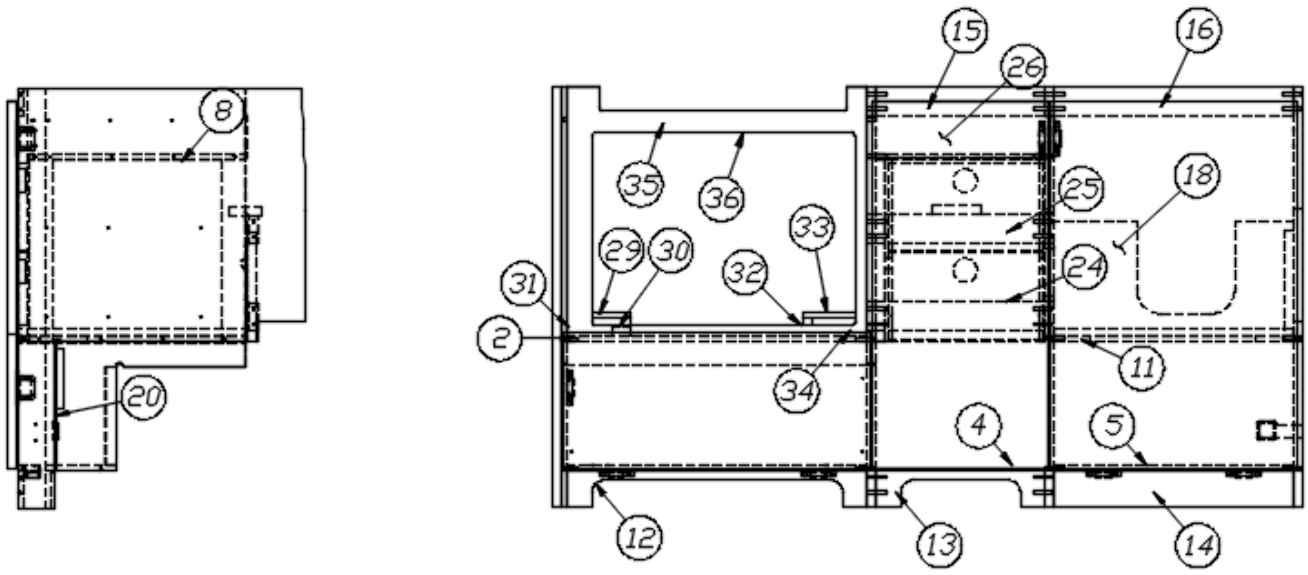

Parts Listed on Next Page

2018 INTERNATIONAL
FURNITURE, GALLEY

Galley Cabinet, Convection Microwave Option, 28’ Signature

	967999-04	Galley Convection Microwave Option
1.	967999-1	Panel, 18.63 x 34.25
2.	967999-2	Panel, 18.63 x 24.5
3.	967999-3	Panel, 8 x 24.5
4.	967999-4	Panel, 3 x 13.75
5.	967999-5	Panel, 3 x 19.5
6.	967999-6	Panel, 17.75 x 14.84
7.	967999-7	Panel, 17.75 x 14.84
8.	967999-8	Panel, 17.75 x 13.75
9.	967999-9	Panel, 19.63 x 34.25
10.	967999-10	Panel, 19.63 x 34.25
11.	967999-11	Panel, 18.63 x 19.5
12.	967999-12	Panel, 3 x 24.5
13.	967999-13	Panel, 3 x 13.75
14.	967999-14	Panel, 3 x 19.5
15.	967999-15I	Panel, 2.25 x 13.75
16.	967999-16	Panel, 2.25 x 19.5
17.	967999-20	Panel, 23.51 x 34.25
18.	967999-21	Panel, 20.25 x 11.75
19.	967999-22	Panel, 8.06 x 24.5
20.	967999-23	Panel, 10.56 x 34.75
21.	967999-24	Door, 25.12 x 11.06
22.	967999-25	Door, 14.38 x 30
23.	967999-26	Door, 20.13 x 30
24.	967999-27	Drawer Face 12.63 x 7.17
25.	967999-28	Drawer Face 12.63 x 7.17
26.	967999-44	Panel, 3.5 x 15.25
27.	967999-42	Panel, 2 x 14.84
28.	967999-43	Panel, 2 x 14.84
29.	967999-47	Panel, 4.75 x 14
30.	967999-48	Panel, 1.44 x 14
31.	967999-49	Panel, 1.44 x 14
32.	967999-50	Panel, 1.44 x 14
33.	967999-51	Panel, 4.75 x 14
34.	967999-52	Panel, 1.44 x 14
35.	967999-53	Panel, 24.5 x 17.62
36.	967999-0460	Panel, 24.5 x 20.25
	968020-06	Drawer box, Self-Close, 5”
	381228-02	Catch, Grabber door (5lb Pull)
	382029-05	Handle bar, 21.33"
	381607-11	Hinge, Self-close
	968024	Insert, Cutlery drawer
	382203-03	Drawer slide, 15”

2018 INTERNATIONAL
FURNITURE, GALLEY

Galley Cabinet, Convection Microwave Option, 28’ Serenity

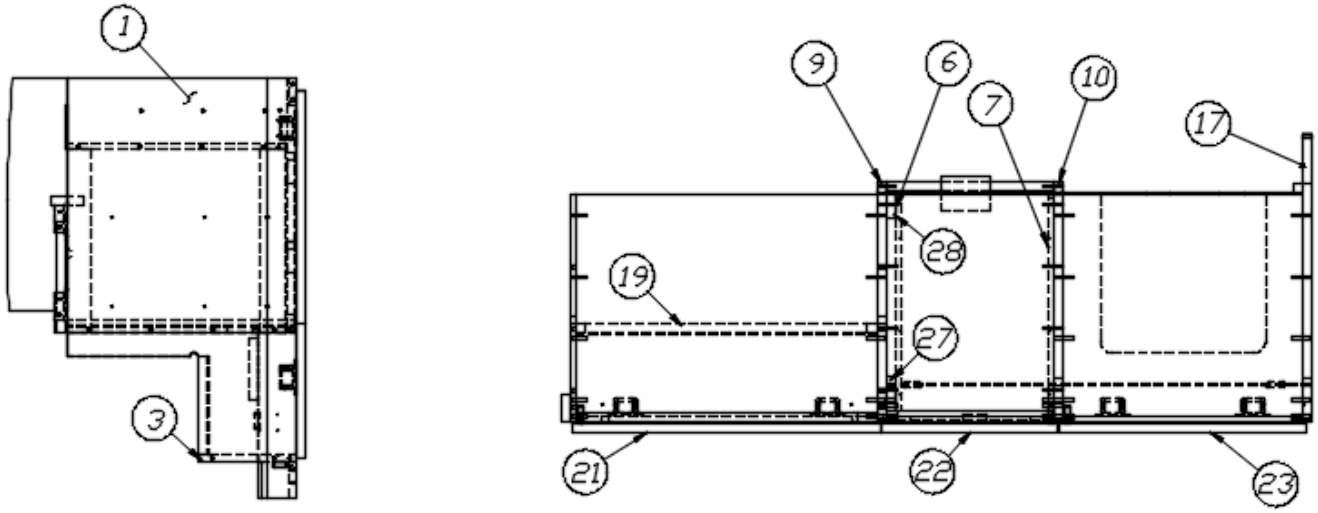

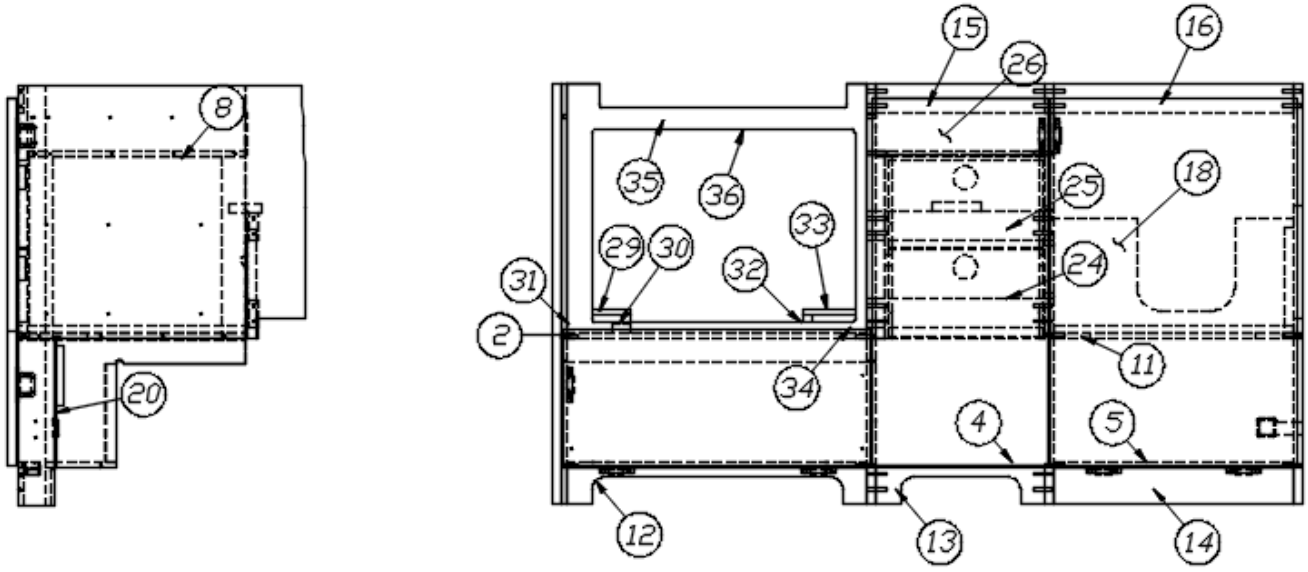

Parts Listed on Next Page

2018 INTERNATIONAL
FURNITURE, GALLEY

Galley Cabinet, Convection Microwave Option, 28’ Serenity

	967999-0415	Galley Convection Microwave Option
1.	967999-1	Panel, 18.63 x 34.25
2.	967999-2	Panel, 18.63 x 24.5
3.	967999-3	Panel, 8 x 24.5
4.	967999-4	Panel, 3 x 13.75
5.	967999-5	Panel, 3 x 19.5
6.	967999-6	Panel, 17.75 x 14.84
7.	967999-7	Panel, 17.75 x 14.84
8.	967999-8	Panel, 17.75 x 13.75
9.	967999-9	Panel, 19.63 x 34.25
10.	967999-10	Panel, 19.63 x 34.25
11.	967999-11	Panel, 18.63 x 19.5
12.	967999-1512	Panel, 3 x 24.5
13.	967999-1513	Panel, 3 x 13.75
14.	967999-1514	Panel, 3 x 19.5
15.	967999-1515	Panel, 2.25 x 13.75
16.	967999-1516	Panel, 2.25 x 19.5
17.	967999-1520	Panel, 23.51 x 34.25
18.	967999-21	Panel, 20.25 x 11.75
19.	967999-22	Panel, 8.06 x 24.5
20.	967999-23	Panel, 10.56 x 34.75
21.	967999-1524	Door, 25.12 x 11.06
22.	967999-1525	Door, 14.38 x 30
23.	967999-1526	Door, 20.13 x 30
24.	967999-1527	Drawer Face 12.63 x 7.17
25.	967999-1528	Drawer Face 12.63 x 7.17
26.	967999-44	Panel, 3.5 x 15.25
27.	967999-1542	Panel, 2 x 14.84
28.	967999-1543	Panel, 2 x 14.84
29.	967999-47	Panel, 4.75 x 14
30.	967999-48	Panel, 1.44 x 14
31.	967999-49	Panel, 1.44 x 14
32.	967999-50	Panel, 1.44 x 14
33.	967999-51	Panel, 4.75 x 14
34.	967999-52	Panel, 1.44 x 14
35.	967999-53	Panel, 24.5 x 17.62
36.	967999-150460	Panel, 24.5 x 20.25
	968020-06	Drawer box, Self-Close, 5”
	381228-02	Catch, Grabber door (5lb Pull)
	382115	Pull, Flat Black
	381607-11	Hinge, Self-close
	968024	Insert, Cutlery drawer
	382203-03	Drawer slide, 15”

Galley Top, 30’

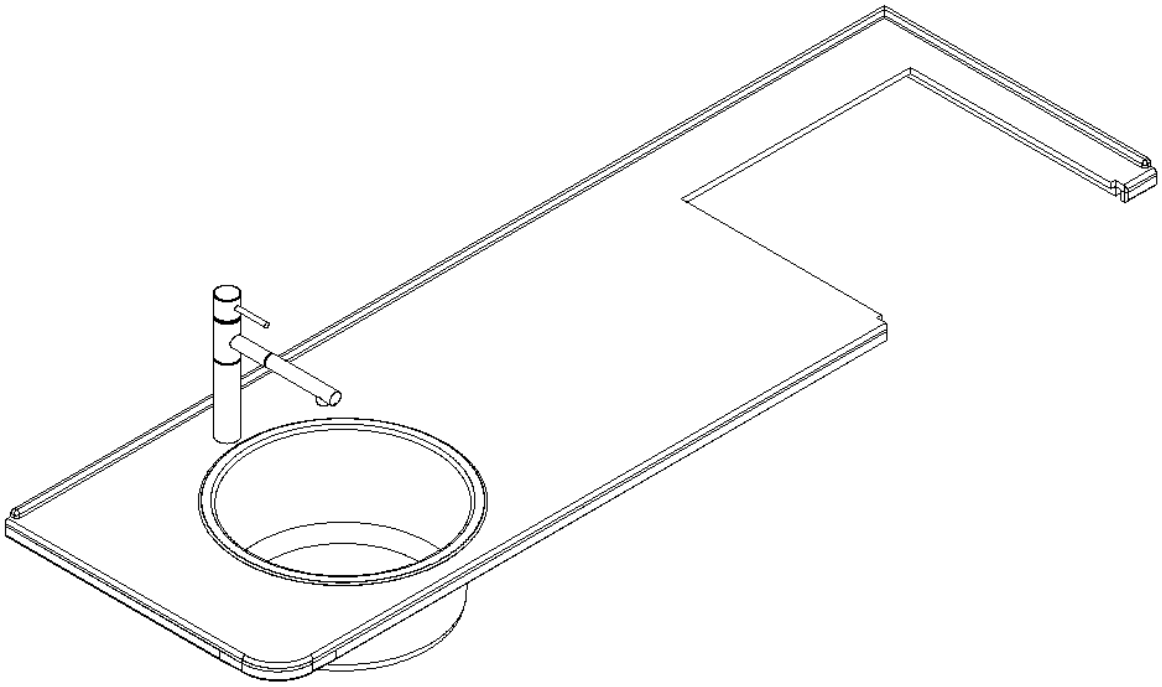

968001-01	Galley Top, Signature
968001-02	Galley Top, Serenity
602356-01	Top, Corian, Ecru, Signature
602356-06	Top, Corian, Sorrel, Serenity
601806	Galley sink, Round, SS
602549	Galley faucet, Pull-out, Chrome

2018 INTERNATIONAL
FURNITURE, GALLEY

Galley Cabinet, Forward Section, 30’ Signature

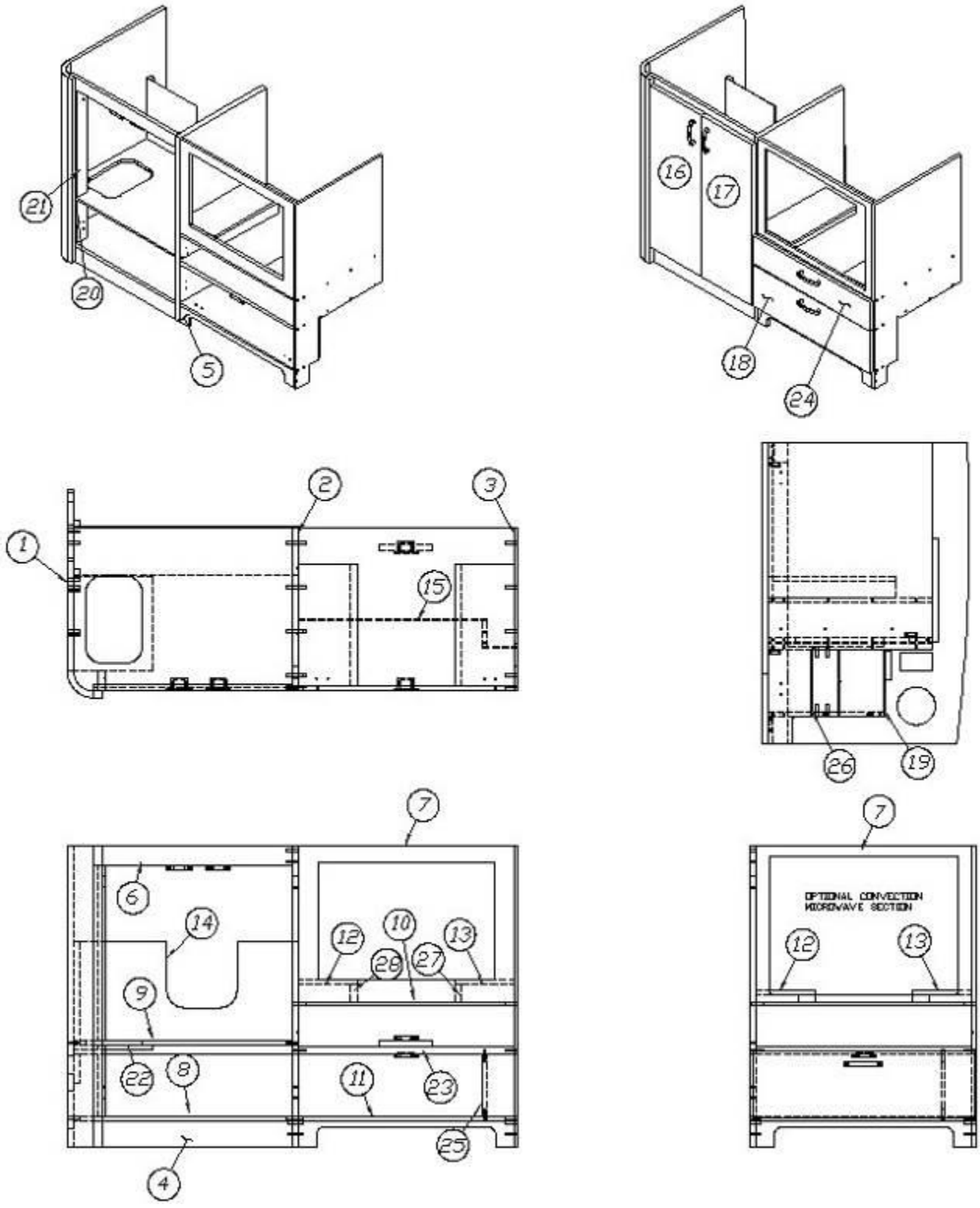

Parts Listed on Next Page

2018 INTERNATIONAL
FURNITURE, GALLEY

Galley Cabinet, Forward Section, 30’ Signature

	968002	Galley Forward Section
	968002-01	Galley Forward Section w/Convection Microwave
1.	968013	Galley sub assembly
2.	968002-2	Panel, 18.63 x 34.25
3.	968002-3	Panel, 18.63 x 34.25
4.	968002-4	Panel, 3 x 22.63
5.	968002-5	Panel, 3 x 24.5
6.	968002-6	Panel, 2.25 x 22.63
7.	968002-7	Panel, 24.5 x 17.75, Standard microwave
	968002-27	Panel, 24.5 x 17.75, Convection microwave
8.	968002-8	Panel, 13.17 x 24.88
9.	968002-9	Panel, 18.63 x 24.88
10.	968002-10	Panel, 18.63 x 24.5
11.	968002-11	Panel, 8 x 24.5
12.	968002-13	Panel, 5.69 x 14
13.	968002-15I	Panel, 5.69 x 14
14.	968002-16	Panel, 25.63 x 11.75
15.	968002-17	Panel, 25 x 7.63
16.	968002-18	Door, 10.88 x 30
17.	968002-19	Door, 10.88 x 30
18.	968002-20	Door, 25.13 x 7.69
19.	968002-28	Panel, 3 x 7.13
20.	968002-29	Panel, 4 x 7.13
21.	968002-30	Panel, 1.94 x 14
22.	968002-31	Panel, 10.88 x 9
23.	968002-32	Panel, 18.63 x 24.5
24.	968002-33	Door, 25.13 x 5.25
25.	968002-40	Panel, 3 x 7.13
26.	968002-41	Panel, 4 x 7.13
27.	968002-42	Panel, 1.94 x 14
28.	968002-43	Panel, 1.94 x 14
	968021-04	Drawer box, 2.75”
	968024	Insert, Cutlery drawer
	381228-02	Catch, Grabber door (5lb Pull)
	382029-00	Handle bar, 21.33"
	381607-11	Hinge, Self-close
	382203-03	Drawer slide, Self-close
	382203-06	Front fixing clips

2018 INTERNATIONAL
FURNITURE, GALLEY

Galley Cabinet, Forward Section, 30’ Serenity

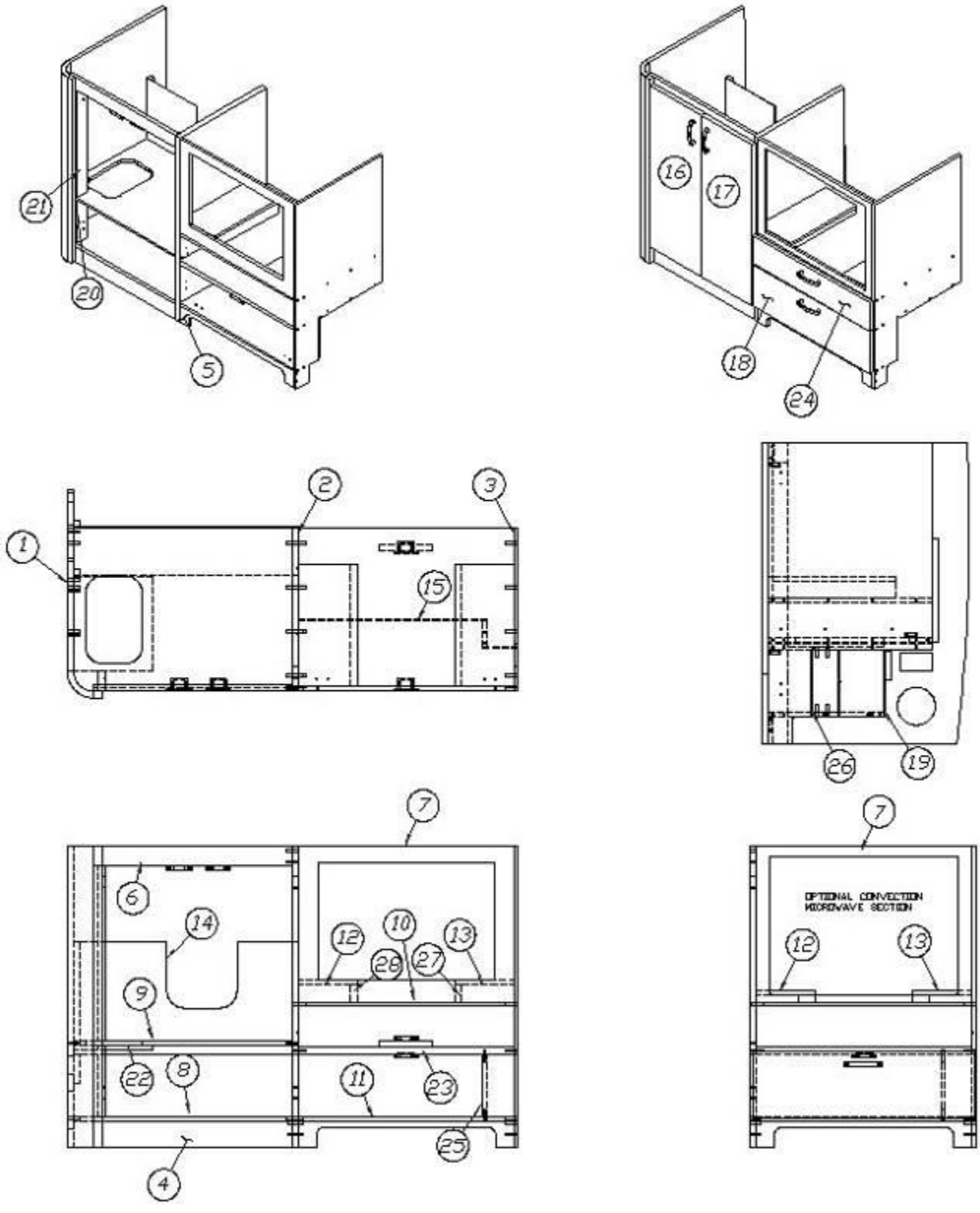

Parts Listed on Next Page

2018 INTERNATIONAL
FURNITURE, GALLEY

Galley Cabinet, Forward Section, 30’ Serenity

	968002-15	Galley Forward Section
	968002-0115	Galley Forward Section w/Convection Microwave
1.	968013-15	Galley sub assembly
2.	968002-2	Panel, 18.63 x 34.25
3.	968002-3	Panel, 18.63 x 34.25
4.	968002-154	Panel, 3 x 22.63
5.	968002-155	Panel, 3 x 24.5
6.	968002-156	Panel, 2.25 x 22.63
7.	968002-157	Panel, 24.5 x 17.75, Standard microwave
	968002-1527	Panel, 24.50 x 17.75, Convection microwave
8.	968002-8	Panel, 13.17 x 24.88
9.	968002-9	Panel, 18.63 x 24.88
10.	968002-10	Panel, 18.63 x 24.5
11.	968002-11	Panel, 8 x 24.5
12.	968002-13	Panel, 5.69 x 14
13.	968002-15I	Panel, 5.69 x 14
14.	968002-16	Panel, 25.63 x 11.75
15.	968002-17	Panel, 25 x 7.63
16.	968002-1518	Door, 10.88 x 30
17.	968002-1519	Door, 10.88 x 30
18.	968002-1520	Door, 25.13 x 7.75
19.	968002-28	Panel, 3 x 7.13
20.	968002-29	Panel, 4 x 7.13
21.	968002-30	Panel, 1.94 x 14
22.	968002-31	Panel, 10.88 x 9
23.	968002-32	Panel, 18.63 x 24.5
24.	968002-1533	Door, 25.13 x 5.25
25.	968002-40	Panel, 3 x 7.13
26.	968002-41	Panel, 4 x 7.13
27.	968002-42	Panel, 1.94 x 14
28.	968002-43	Panel, 1.94 x 14
	381228-02	Catch, Grabber door (5lb Pull)
	382115	Pull, Flat Black
	381607-11	Hinge, Self-close
	968021-04	Drawer box, 2.75”
	968024	Insert, Cutlery drawer
	382203-03	Drawer slide, Self-close
	382203-06	Front fixing clips

2018 INTERNATIONAL
FURNITURE, GALLEY

Galley Cabinet, Aft with Oven, 30’ Signature

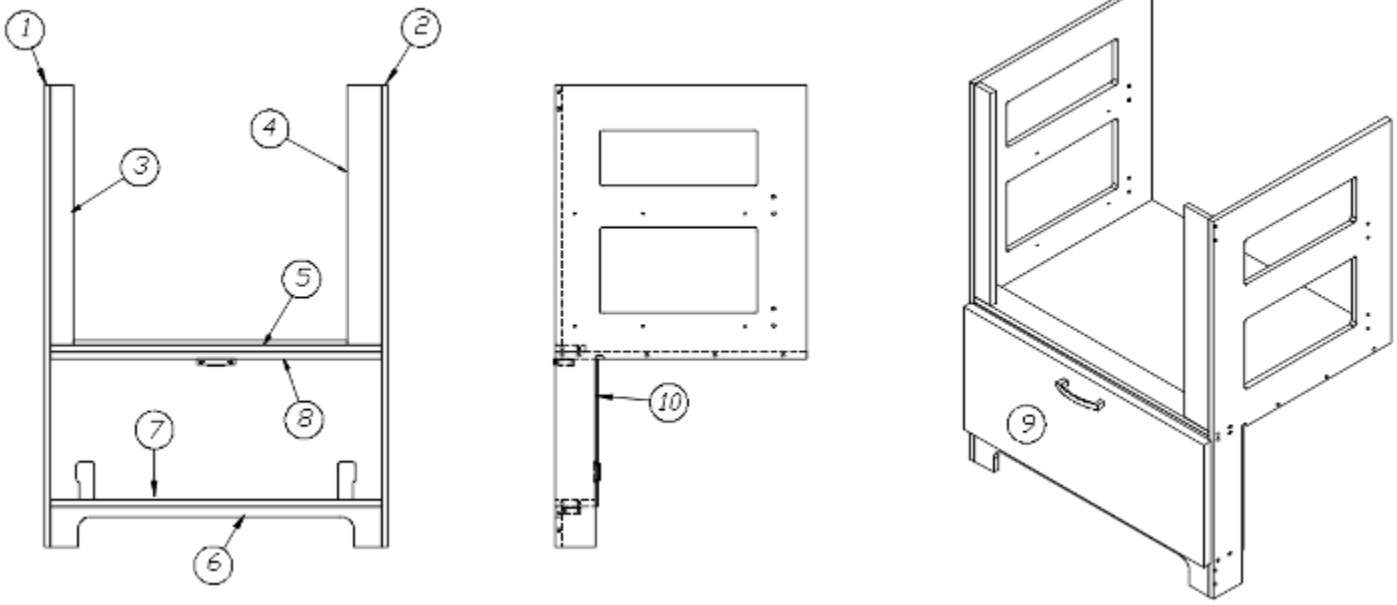

	968003	Galley Aft with Oven
1.	968003-1	Panel, 18.63 x 34.25
2.	968003-2	Panel, 18.63 x 34.25
3.	968003-3	Panel, 1.69 x 19.25
4.	968003-4	Panel, 2.56 x 19.25
5.	968003-5	Panel, 24.5 x 2.25
6.	968003-6	Panel, 3 x 24.5
7.	968003-7	Panel, 3 x 24.5
8.	968003-8	Panel, 18.63 x 24.5
9.	968003-9	Door, 25.13 x 11.13
10.	968003-10	Panel, 11 x 25.5
	381228-02	Catch, Grabber door (5lb Pull)
	382029-00	Handle bar, 21.33"
	381607-11	Hinge, Self-close
	365364-01	Edgebanding .63”, Ebony Woods
	365364-02	Edgebanding .94”, Ebony Woods
	203776	Plug, Square finishing ribbed, White

2018 INTERNATIONAL
FURNITURE, GALLEY

Galley Cabinet, Aft with Oven, 30’ Serenity

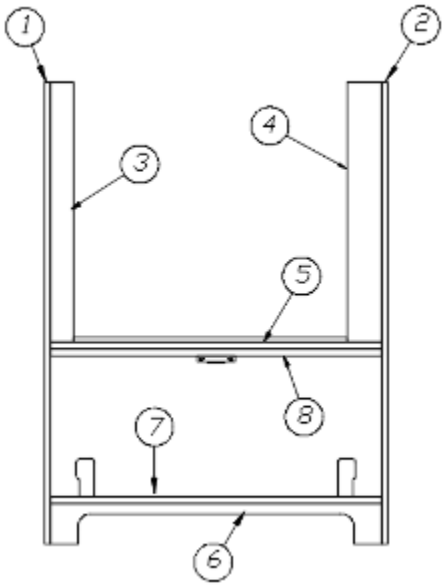

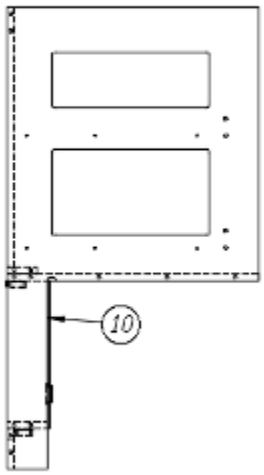

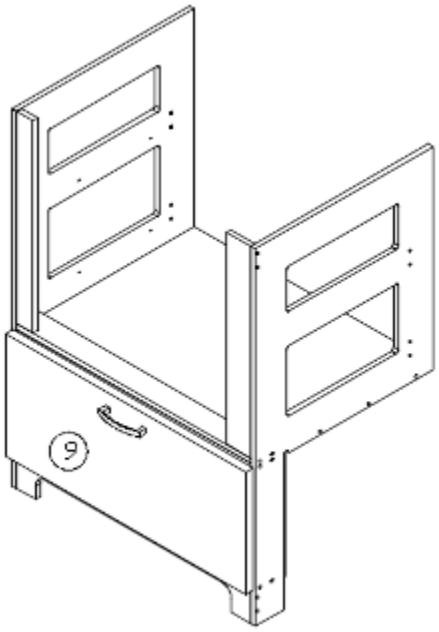

	968003-15	Galley Aft with Oven
1.	968003-1	Panel, 18.63 x 34.25
2.	968003-2	Panel, 18.63 x 34.25
3.	968003-1516	Panel, 1.69 x 18.88
4.	968003-1517	Panel, 2.56 x 18.88
5.	968003-5	Panel, 24.5 x 2.25
6.	968003-156	Panel, 3 x 24.5
7.	968003-7	Panel, 3 x 24.5
8.	968003-8	Panel, 18.63 x 24.5
9.	968003-159	Door, 25.13 x 11.13
10.	968003-10	Panel, 11 x 25.5
	381228-02	Catch, Grabber door (5lb Pull)
	382115	Pull, Flat Black
	381607-11	Hinge, Self-close
	365344-01	Edgebanding, .63", Pearl Bisque
	365344-02	Edgebanding, .94", Pearl Bisque
	203776	Plug, Square finishing ribbed, White

2018 INTERNATIONAL
FURNITURE, GALLEY

Galley Cabinet, Aft with Convection Microwave, 30’ Signature

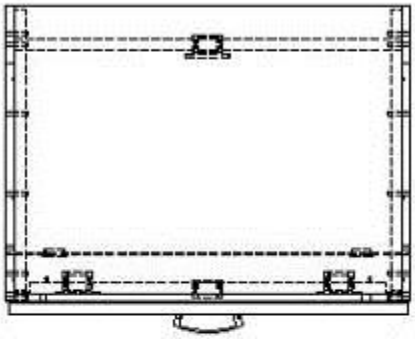

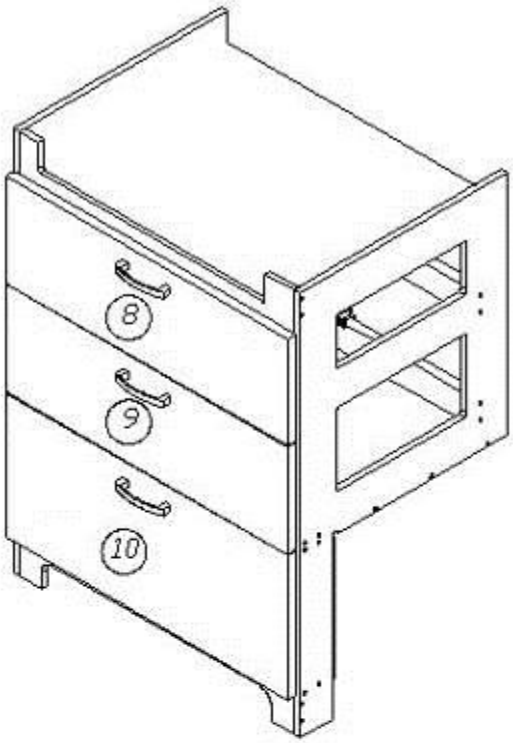

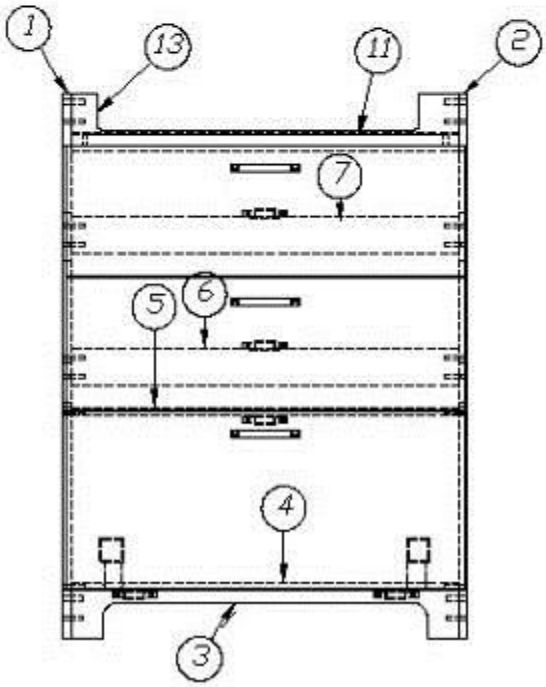

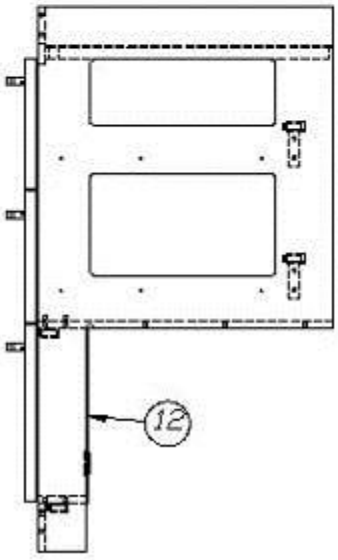

Parts Listed on Next Page

Galley Cabinet, Aft with Convection Microwave, 30’ Signature

	968004	Galley, Aft with Convection Microwave Option
1.	968004-1	Panel, 18.63 x 34.75
2.	968004-2	Panel, 18.63 x 34.75
3.	968004-4	Panel, 3.5 x 24.5
4.	968004-5	Panel, 3 x 24.5
5.	968004-6	Panel, 18.63 x 24.5
6.	968004-7	Panel, 2.25 x 24.5
7.	968004-8	Panel, 2.25 x 24.5
8.	968004-9	Door, 25.13 x 8.25
9.	968004-10	Door, 25.13 x 8.25
10.	968004-11	Panel, 25.13 x 11.13
11.	968004-12	Panel, 18.13 x 24.5
12.	968004-13	Panel, 11 x 25.5
13.	968004-21	Panel, 3.63 x 24.5
	382029-00	Handle bar, 21.33"
	381607-11	Hinge, Self-close
	365364-01	Edgebanding, .63", Ebony Woods
	365364-02	Edgebanding, .94", Ebony Woods
	968020-07	Drawer box, 5”
	381228-02	Catch, Grabber door (5lb Pull)
	382203-03	Drawer slide, Self-close
	382203-06	Front fixing clips

2018 INTERNATIONAL
FURNITURE, GALLEY

Galley Cabinet, Aft with Convection Microwave, 30’ Serenity

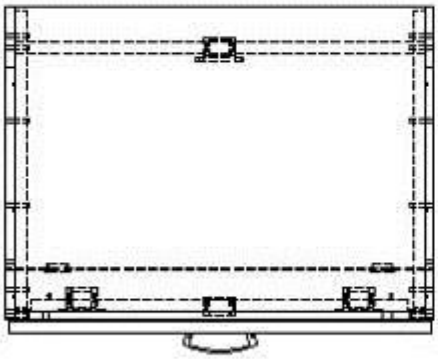

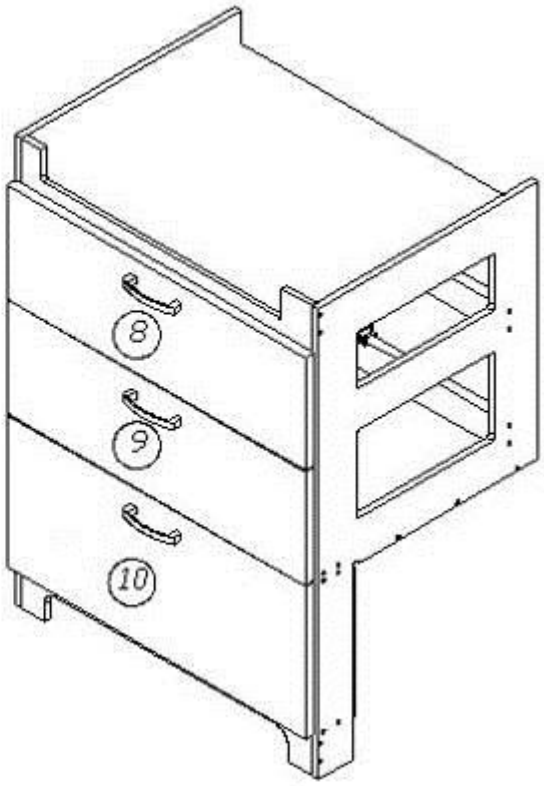

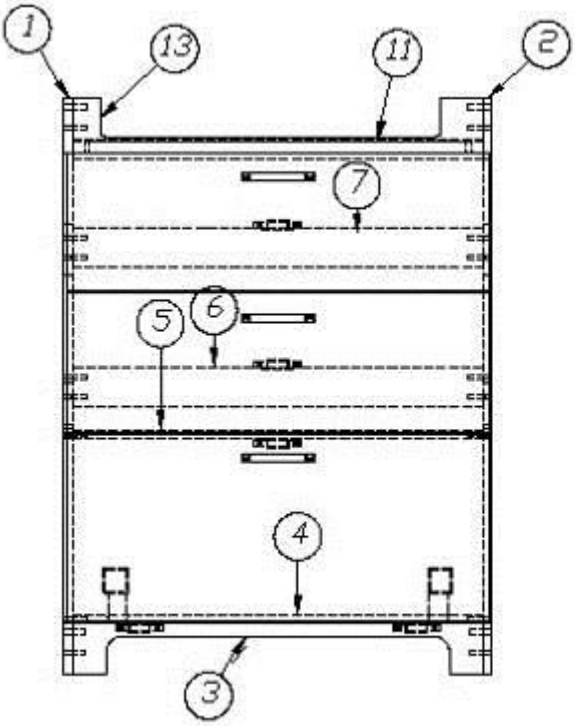

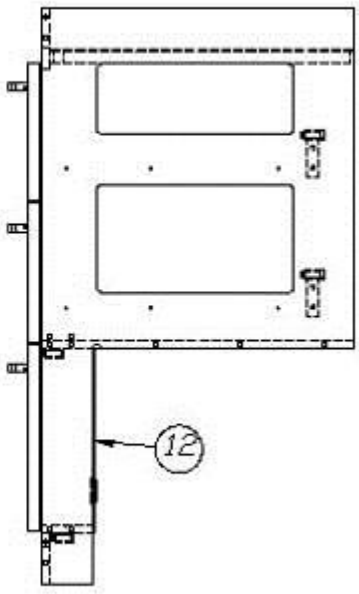

Parts Listed on Next Page

Galley Cabinet, Aft with Convection Microwave, 30’ Serenity

	968004-15	Galley, Aft with Convection Microwave Option
1.	968004-1	Panel, 18.63 x 34.75
2.	968004-2	Panel, 18.63 x 34.75
3.	968004-1521	Panel, 3.63 x 24.5
4.	968004-154	Panel, 3.5 x 24.5
5.	968004-5	Panel, 3 x 24.5
6.	968004-6	Panel, 18.63 x 24.5
7.	968004-7	Panel, 2.25 x 24.5
8.	968004-8	Panel, 2.25 x 24.5
9.	968004-159	Door, 25.13 x 8.25
10.	968004-1510	Door, 25.13 x 8.25
11.	968004-1511	Panel, 25.13 x 11.13
12.	968004-12	Panel, 18.13 x 24.5
13.	968004-13	Panel, 11 x 25.5
	382115	Pull, Flat Black
	381228-02	Catch, Grabber door (5lb Pull)
	381607-11	Hinge, Self-close
	365344-01	Edgebanding, .63", Pearl Bisque
	365344-02	Edgebanding, .94", Pearl Bisque
	968020-07	Drawer box, 5”
	382203-03	Drawer slide, Self-close
	382203-06	Front fixing clips

2018 INTERNATIONAL
FURNITURE, GALLEY

Refrigerator and Microwave Cabinet, 23CB Signature

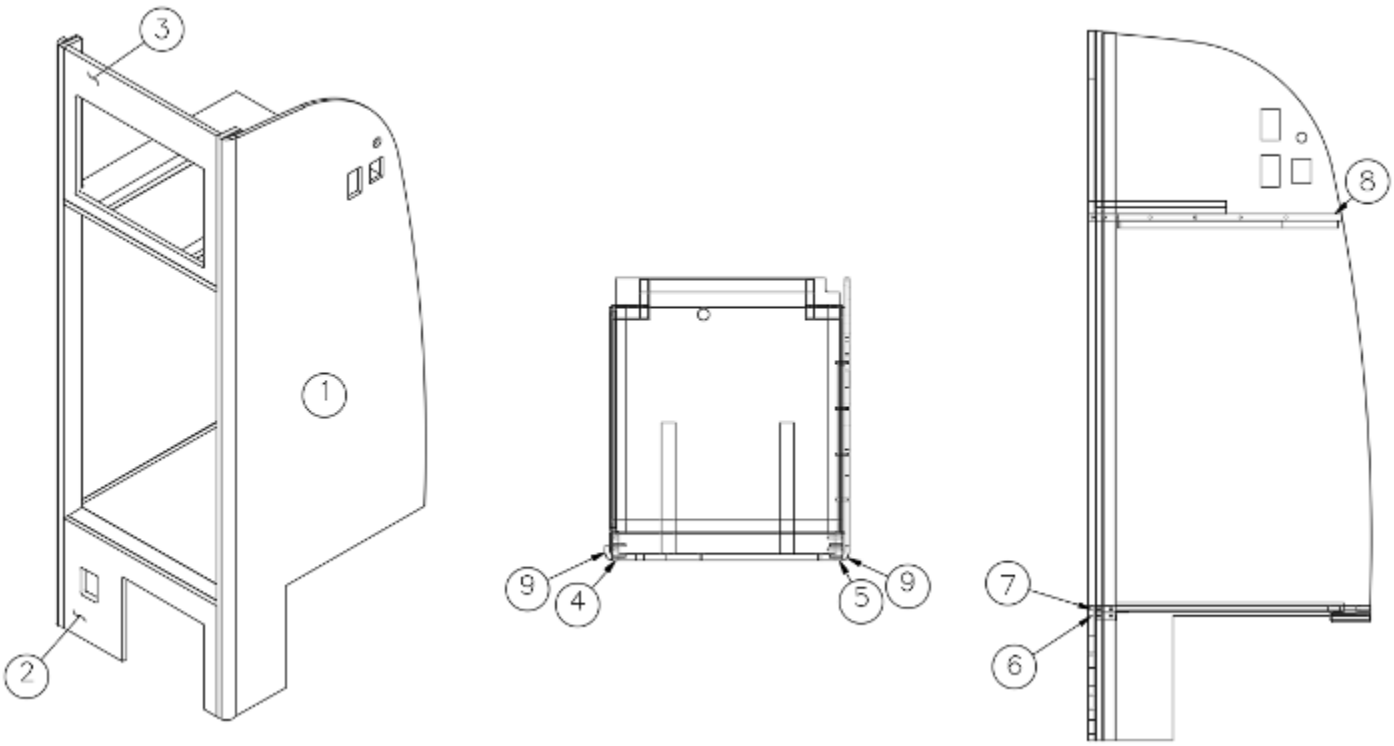

	966948	Refrigerator and Microwave Cabinet
1.	966948-1	Panel, 29.65 x 78.37
2.	966948-2	Panel, 23.94 x 14.88
3.	966948-3	Panel, 23.94 x 20.39
4.	966948-4	Panel, 3 x 78.65
5.	966948-5	Panel, 3 x 78.65
6.	966948-6	Panel, 2.25 x 23.94
7.	966948-7	Panel, 2.25 x 23.94
8.	966948-8	Panel, 25.94 x 285
9.	801706-0024	Corner trim, 90°, 1" Radius, Ebony
	203138-05	Extrusion, Plastic, ½”, Black
	966811	Refrigerator stand
	381209-01	Grommet w/cap, 1.5" hole, Black

2018 INTERNATIONAL
FURNITURE, GALLEY

Refrigerator and Microwave Cabinet, 23CB Serenity

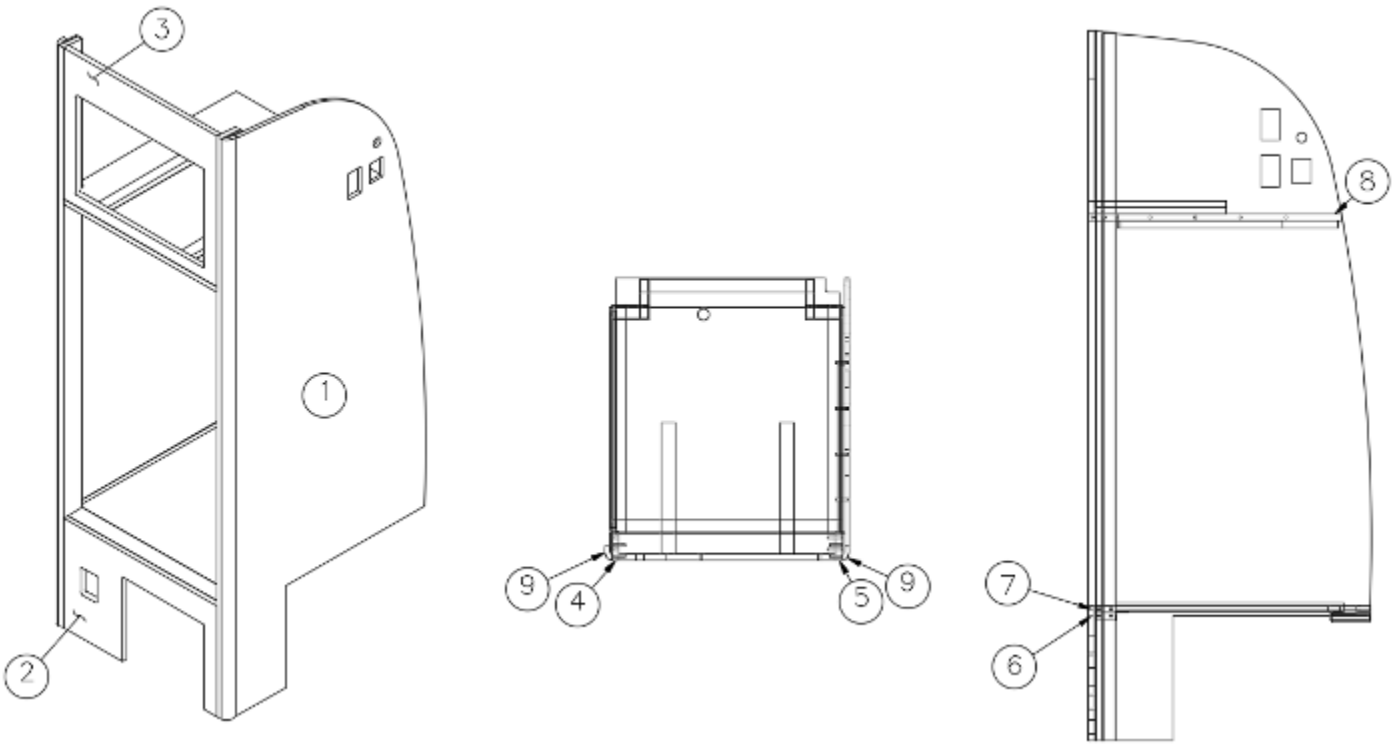

	966948-15	Refrigerator and Microwave Cabinet
1.	966948-151	Panel, 29.65 x 78.37
2.	966948-152	Panel, 23.94 x 14.88
3.	966948-153	Panel, 23.94 x 20.39
4.	966948-4	Panel, 3 x 78.65
5.	966948-5	Panel, 3 x 78.65
6.	966948-6	Panel, 2.25 x 23.94
7.	966948-7	Panel, 2.25 x 23.94
8.	966948-8	Panel, 25.94 x 285
9.	801706-0018	Corner trim, 90°, 1" radius, Asian Sand
	203138-03	Extrusion, Plastic, ½”, Beige
	966811	Refrigerator stand,
	381209-01	Grommet, 1.5" hole, Black

2018 INTERNATIONAL
FURNITURE, GALLEY

Refrigerator and Convection Microwave Cabinet, 23CB Signature

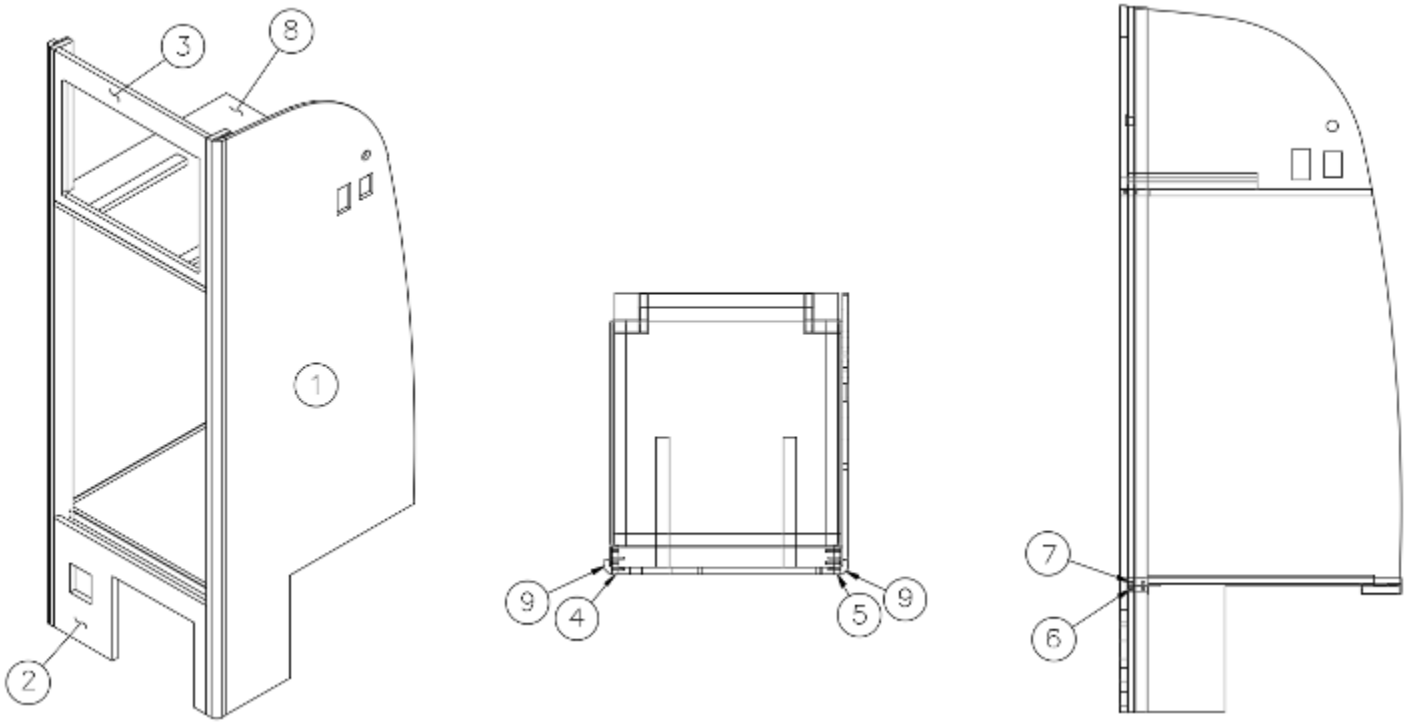

	967226	Refrigerator and Convection Microwave Cabinet
1.	967226-1	Panel, 29.65 x 78.37
2.	967226-2	Panel, 23.94 x 14.88
3.	967226-3	Panel, 23.94 x 20.39
4.	967226-4	Panel, 3 x 78.65
5.	967226-5	Panel, 3 x 78.65
6.	967226-6	Panel, 2.25 x 23.94
7.	967226-7	Panel, 2.25 x 23.94
8.	967226-8	Panel, 25.94 x 285
9.	801706-0024	Corner trim, 90°, 1" radius, Ebony
	966811	Refrigerator stand
	203138-05	Extrusion, Plastic, .5", Black
	381209-01	Grommet w/cap, 1.5" hole, Black

2018 INTERNATIONAL
FURNITURE, GALLEY

Refrigerator and Convection Microwave Cabinet, 23CB Serenity

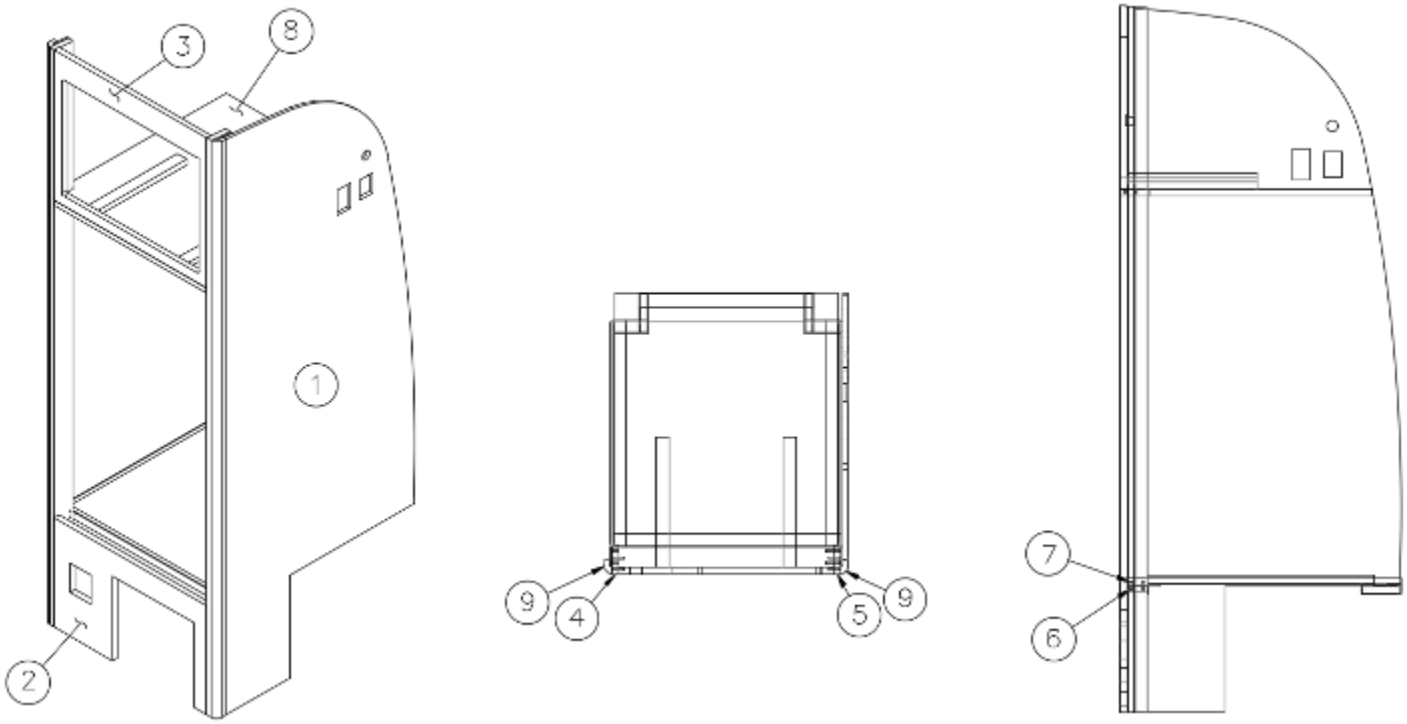

	967226-15	Refrigerator and Convection Microwave Cabinet
1.	967226-151	Panel, 29.65 x 78.37
2.	967226-152	Panel, 23.94 x 14.88
3.	967226-153	Panel, 23.94 x 20.39
4.	967226-154	Panel, 3 x 78.65
5.	967226-155	Panel, 3 x 78.65
6.	967226-156	Panel, 2.25 x 23.94
7.	967226-157	Panel, 2.25 x 23.94
8.	967226-158	Panel, 25.94 x 285
9.	801393-0018	Corner trim, 90°, 1" radius, Asian Sand
	966811	Refrigerator stand
	203138-03	Extrusion, Plastic, .5", Beige
	381209-01	Grommet w/cap, 1.5" hole, Black

2018 INTERNATIONAL
FURNITURE, GALLEY

Refrigerator and Microwave Cabinet, 23FB A2GO, 23FB Signature

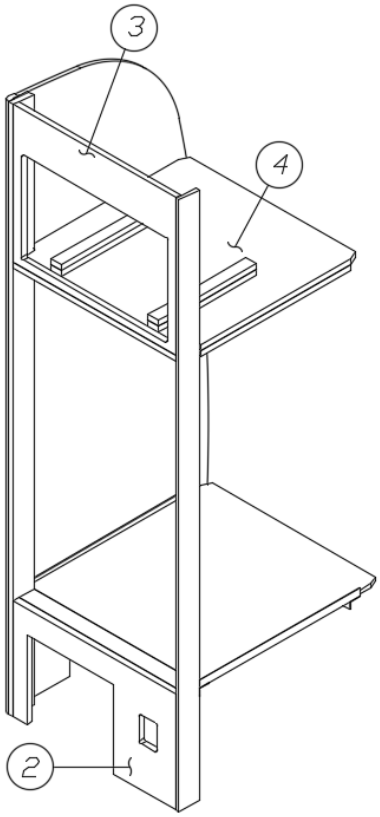

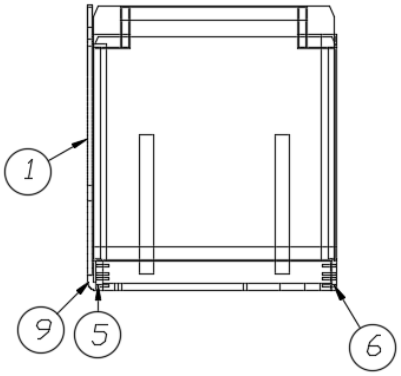

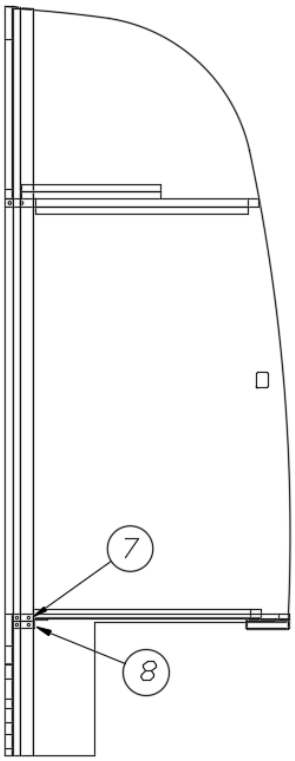

	967310	Refrigerator and Microwave Cabinet, Convection Microwave
	967310-02	Refrigerator and Microwave Cabinet, 23FB A2GO
1.	967310-1	Panel, 28.22 x 78.19
2.	967310-23	Panel, 23.94 x 14.88
	967310-0219	Panel, 23.94 x 14.88, A2GO
3.	967310-3	Panel, 23.94 x 20.23
4.	967310-4	Panel, 26.56 x 25.44
5.	967310-5	Panel, 3 x 78.39
6.	967310-6	Panel, 3 x 78.48
7.	967310-7	Panel, 2.25 x 23.94
8.	967310-8	Panel, 2.25 x 23.94
9.	801706-0024	Corner trim, 90°, 1” radius, Ebony Woods
	968352	Refrigerator stand
	203138-05	Extrusion, Plastic ½” Black

2018 INTERNATIONAL
FURNITURE, GALLEY

Refrigerator and Microwave Cabinet, 23FB Serenity

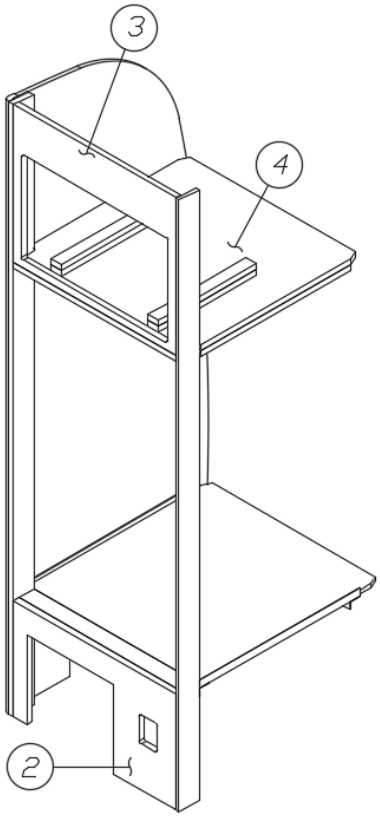

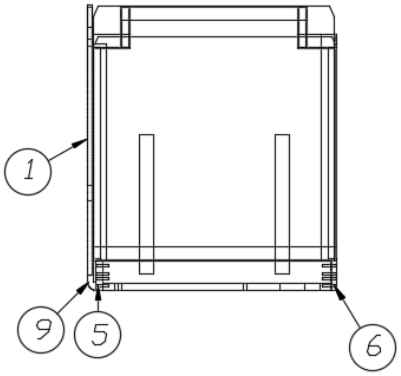

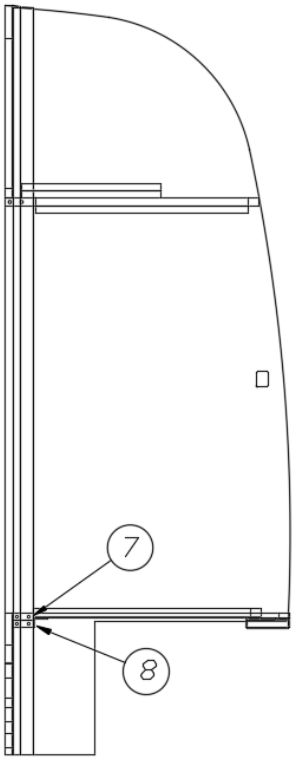

	967310-15	Refrigerator and Microwave Cabinet, Convection
1.	967310-151	Panel, 28.22 x 78.19
2.	967310-1523	Panel, 23.94 x 14.88
3.	967310-153	Panel, 23.94 x 20.23
4.	967310-4	Panel, 26.56 x 25.44
5.	967310-5	Panel, 3 x 78.39
6.	967310-156	Panel, 3 x 78.48
7.	967310-7	Panel, 2.25 x 23.94
8.	967310-8	Panel, 2.25 x 23.94
9.	801706-0018	Corner trim, 90°, 1” radius, Asian Sand
	968352	Refrigerator stand
	203138-03	Extrusion, Plastic, ½”, Beige

2018 INTERNATIONAL
FURNITURE, GALLEY

Refrigerator and Microwave Cabinet, 25’ Signature

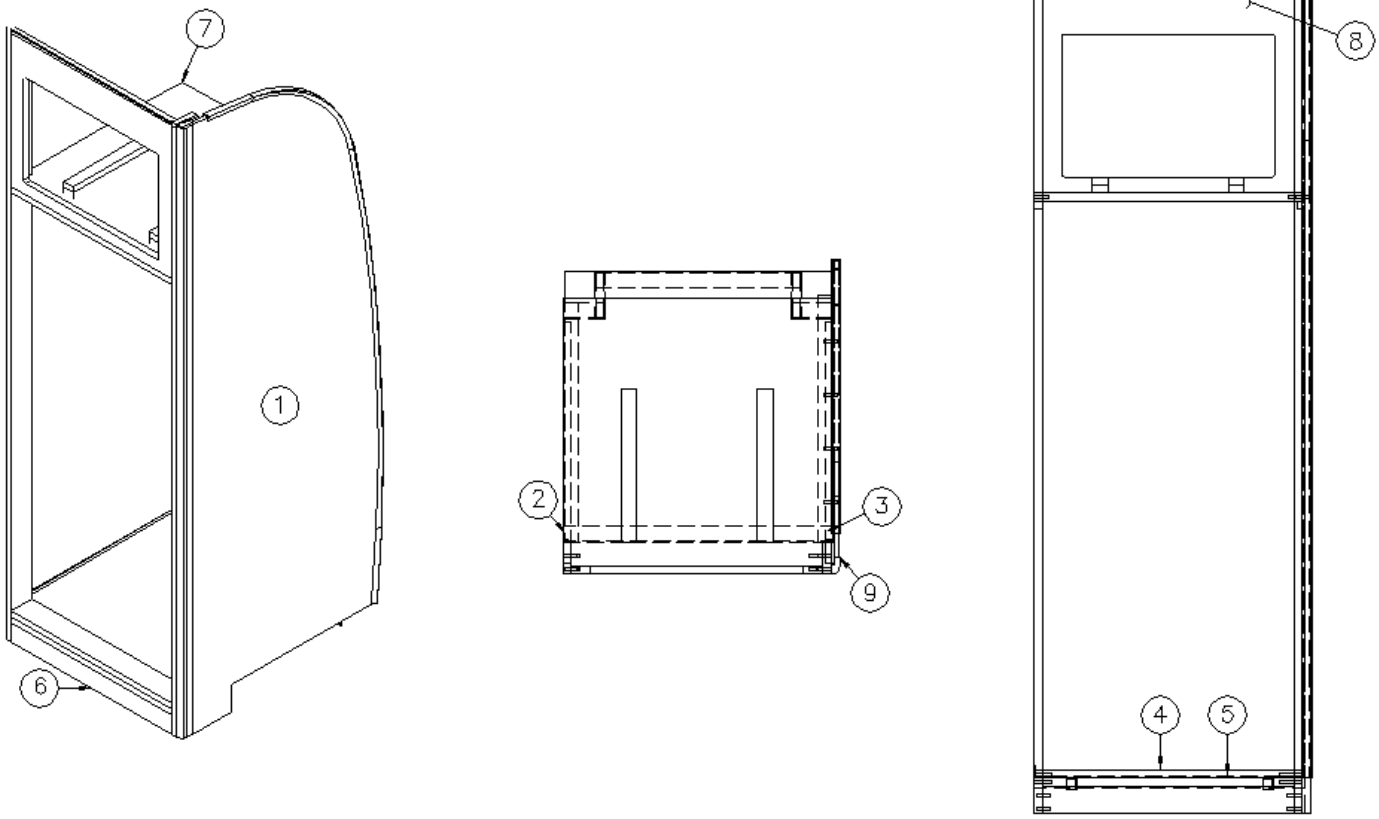

	967724	Refrigerator Cabinet
1.	967724-1	Panel, 28 x 78.31
2.	967724-2	Panel, 3 x 78.7
3.	967724-3	Panel, 3 x 78.8
4.	967724-4	Panel, 3 x 23.81
5.	967724-5	Panel, 3 x 23.81
6.	967724-6	Panel, 2.5 x 23.81
7.	967724-7	Panel, 26.11 x 25.56
8.	967724-10	Panel, 23.81 x 20.2
9.	801706-0024	Corner trim, 90°, 1" radius, Ebony
	203138-05	Extrusion, Plastic, .5", Black
	968353	Refrigerator stand

2018 INTERNATIONAL
FURNITURE, GALLEY

Refrigerator and Microwave Cabinet, 25’ Serenity

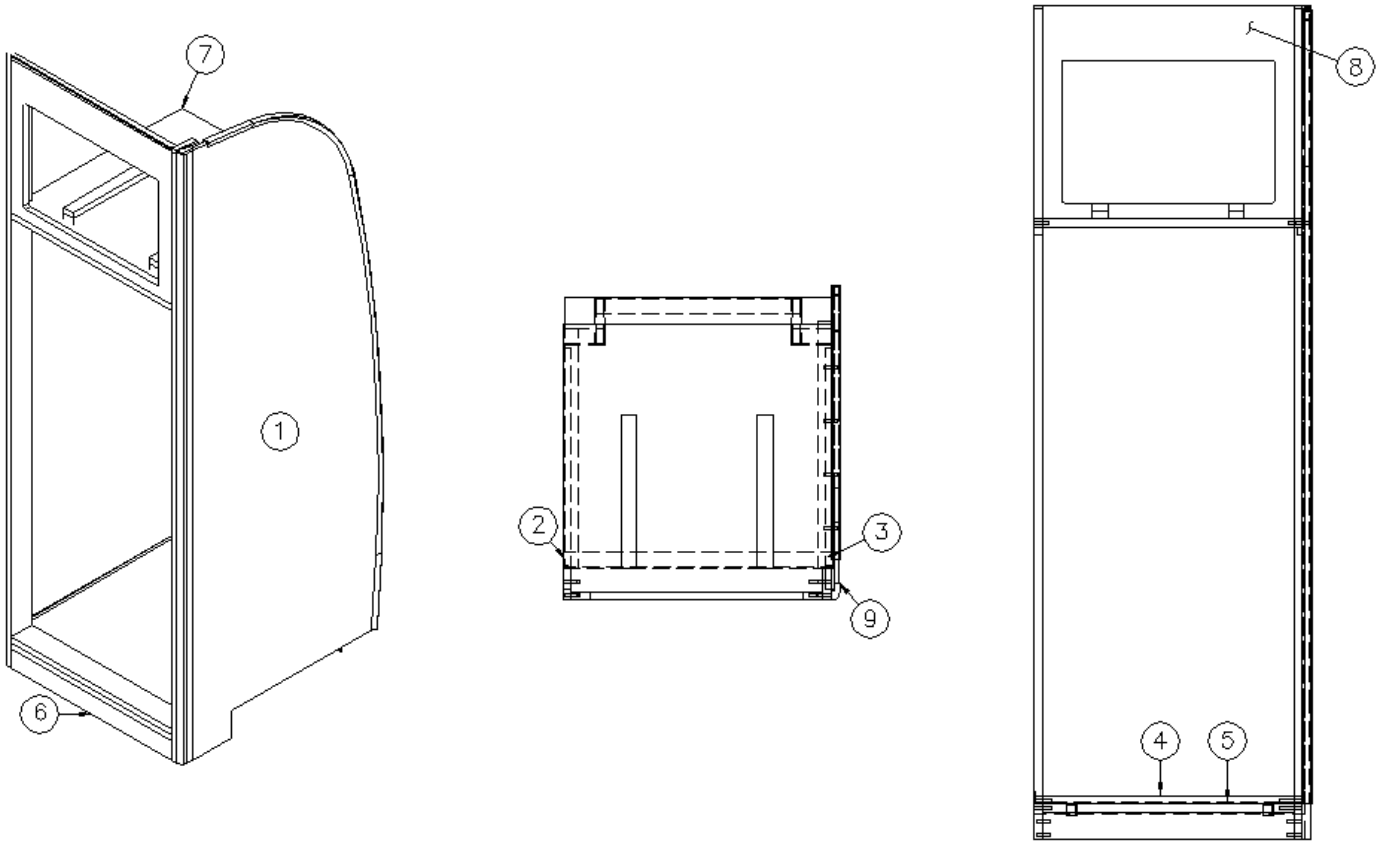

	967724-15	Refrigerator Cabinet
1.	967724-151	Panel, 28 x 78.31
2.	967724-2	Panel, 3 x 78.7
3.	967724-3	Panel, 3 x 78.8
4.	967724-154	Panel, 3 x 23.81
5.	967724-155	Panel, 3 x 23.81
6.	967724-6	Panel, 2.5 x 23.81
7.	967724-7	Panel, 26.11 x 25.56
8.	967724-1510	Panel, 23.81 x 20.2
9.	801706-0018	Corner trim, 90°, 1" radius, Asian Sand
	203138-03	Extrusion, Plastic, .5", Beige
	968353	Refrigerator stand

2018 INTERNATIONAL
FURNITURE, GALLEY

Refrigerator Cabinet, 25FB, 27FB Signature

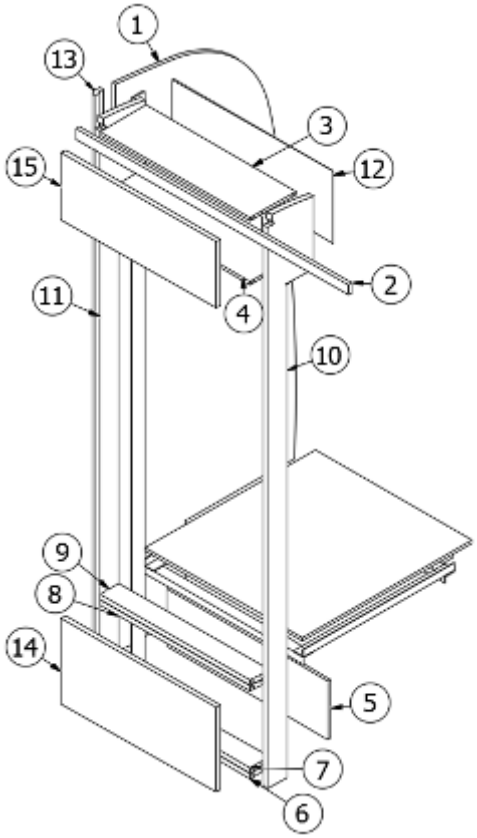

	966853	Refrigerator Cabinet
1.	966853-1	Panel, 28.64 x 78.45
2.	966853-2	Panel, 1.49 x 43
3.	966853-3	Panel, 7.25 x 23.81
4.	966853-4	Panel, 7.25 x 23.81
5.	966853-5	Panel, 8 x 25.5
6.	966853-6	Panel, 3 x 23.81
7.	966853-7	Panel, 3 x 23.81
8.	966853-8	Panel, 3 x 23.81
9.	966853-9	Panel, 3 x 23.81
10.	966853-11	Panel, 7.25 x 78.74
11.	966853-12	Panel, 7.25 x 78.74
12.	966853-15I	Panel, 9.92 x 25.31
13.	801706-0024	Corner trim, 90°, 1" radius, Ebony
14.	966853-18	Door, 24.44 x 11.69
15.	966853-19I	Door, 24.44 x 9.25
	966812	Refrigerator stand
	382029-05	Handle bar, 21.33"
	381607-11	Hinge, Self-close
	381228-02	Catch, Grabber door (5lb Pull)

2018 INTERNATIONAL
FURNITURE, GALLEY

Refrigerator Cabinet, 25FB, 27FB Serenity

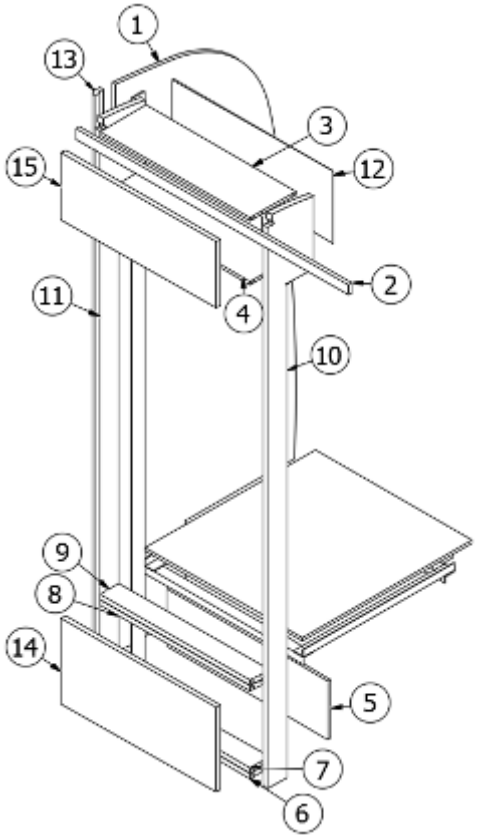

	966853-15	Refrigerator Cabinet
1.	966853-151	Panel, 28.64 x 78.45
2.	966853-152	Panel, 1.49 x 43
3.	966853-3	Panel, 7.25 x 23.81
4.	966853-4	Panel, 7.25 x 23.81
5.	966853-5	Panel, 8 x 25.5
6.	966853-6	Panel, 3 x 23.81
7.	966853-7	Panel, 3 x 23.81
8.	966853-8	Panel, 3 x 23.81
9.	966853-9	Panel, 3 x 23.81
10.	966853-11	Panel, 7.25 x 78.74
11.	966853-12	Panel, 7.25 x 78.74
12.	966853-15I	Panel, 9.92 x 25.31
13.	801706-0018	Corner trim, 90°, 1" radius, Asian Sand
14.	966853-1518	Door, 24.44 x 11.69
15.	966853-1519	Door, 24.44 x 9.25
	966812	Refrigerator stand
	382115	Pull, Flat Black
	381607-11	Hinge, Self-close
	381228-02	Catch, Grabber door (5lb Pull)

2018 INTERNATIONAL
FURNITURE, GALLEY

Refrigerator Cabinet, 28’ Signature

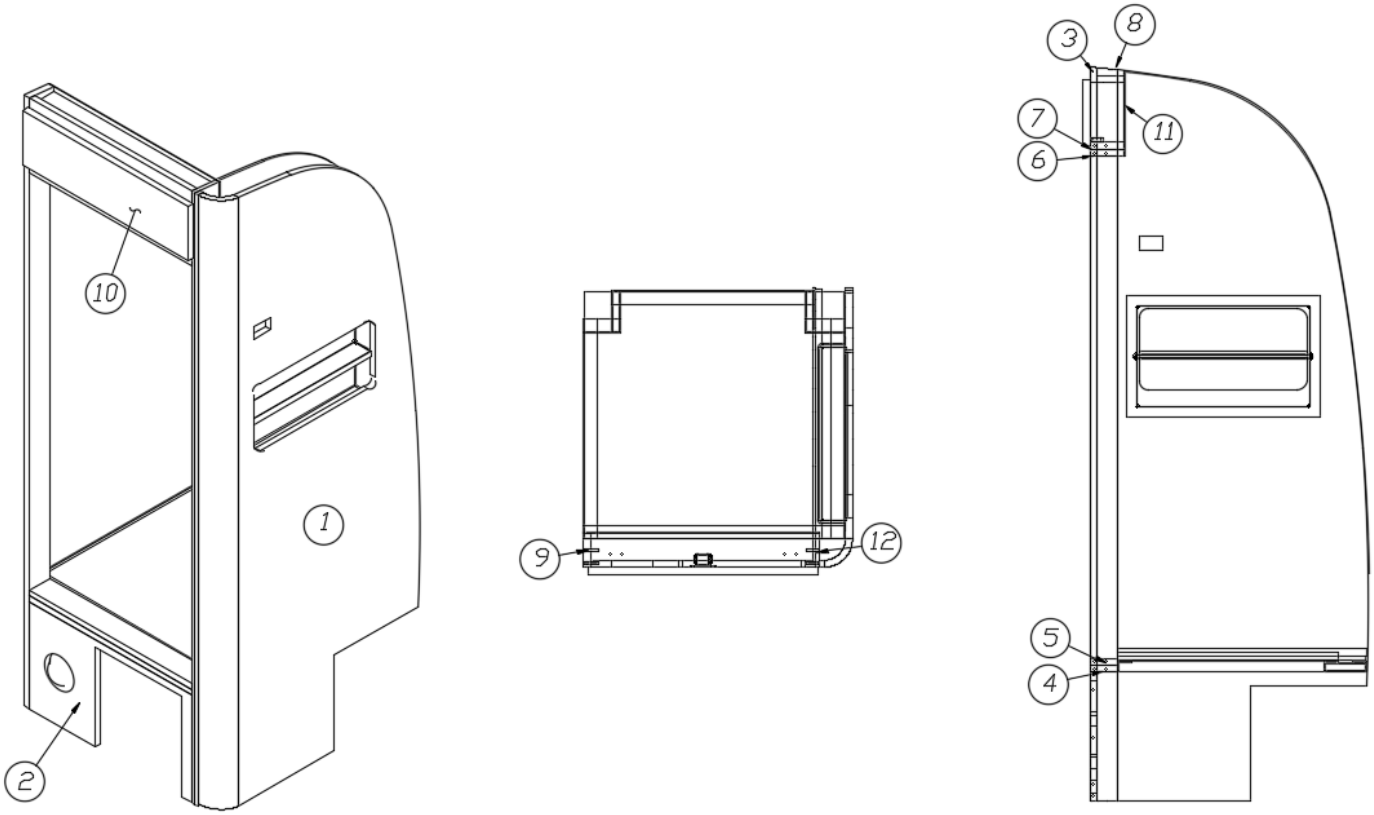

	968213	Refrigerator Cabinet
1.	966993	Refrigerator panel
2.	968213-2	Panel, 13.75 x 24.06
3.	968213-3	Panel, 1.71 x 24.06
4.	968213-4	Panel, 3 x 24.06
5.	968213-5	Panel, 3 x 24.06
6.	968213-6	Panel, 3.63 x 24.06
7.	968213-7	Panel, 3.63 x 24.06
8.	968213-8	Panel, 2.88 x 24.06
9.	968213-9	Panel, 3.63 x 78.581
10.	968213-11	Door, 24.69 x 7
11.	968213-12	Panel, 9.21 x 25.31
12.	968213-13	Panel, 3.63 x 78.581
	203384	Spice rack
	203476	Refrigerator shelf
	966808	Refrigerator stand
	382029-05	Handle bar, 21.33”
	381607-11	Hinge, Self-close
	381228-02	Catch, Grabber door
	365364-01	Edgebanding, .63”, Ebony Woods
	365364-02	Edgebanding, .94”, Ebony Woods

2018 INTERNATIONAL
FURNITURE, GALLEY

Refrigerator Cabinet, 28’ Serenity

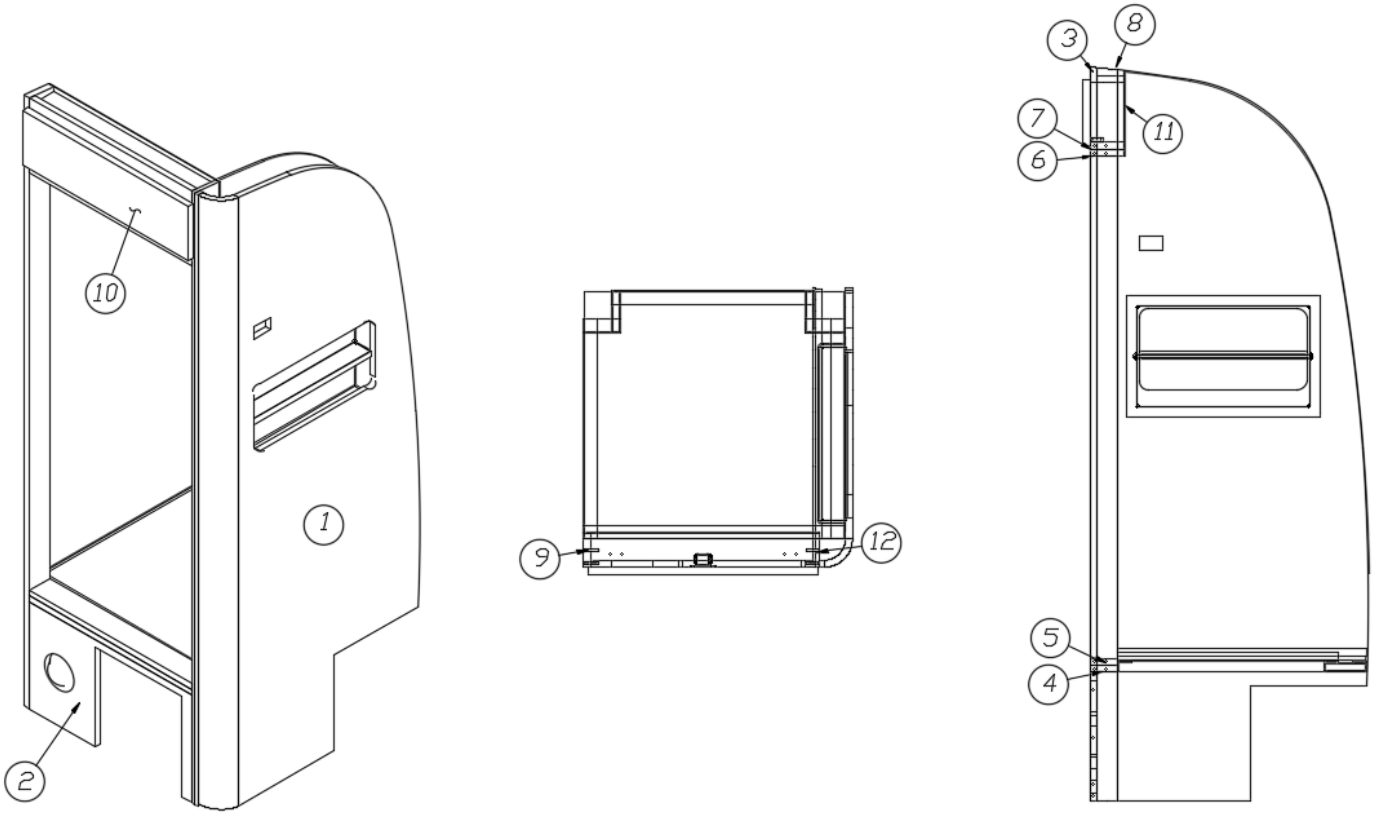

	968213-15	Refrigerator Cabinet
1.	966993-15	Refrigerator panel
2.	968213-152	Panel, 13.75 x 24.06
3.	968213-153	Panel, 1.71 x 24.06
4.	968213-4	Panel, 3 x 24.06
5.	968213-5	Panel, 3 x 24.06
6.	968213-6	Panel, 3.63 x 24.06
7.	968213-7	Panel, 3.63 x 24.06
8.	968213-8	Panel, 2.88 x 24.06
9.	968213-9	Panel, 3.63 x 78.581
10.	968213-1511	Door, 24.69 x 7
11.	968213-12	Panel, 9.21 x 25.31
12.	968213-13	Panel, 3.63 x 78.581
	203384	Spice rack
	203476	Refrigerator shelf
	966808	Refrigerator stand
	382115	Pull, Flat Black
	381607-11	Hinge, Self-close
	381228-02	Catch, Grabber door
	365344-01	Edgebanding, .63”, Pearl Bisque
	365344-02	Edgebanding, .94”, Pearl Bisque

2018 INTERNATIONAL
FURNITURE, GALLEY

Refrigerator Cabinet, 30’ Signature

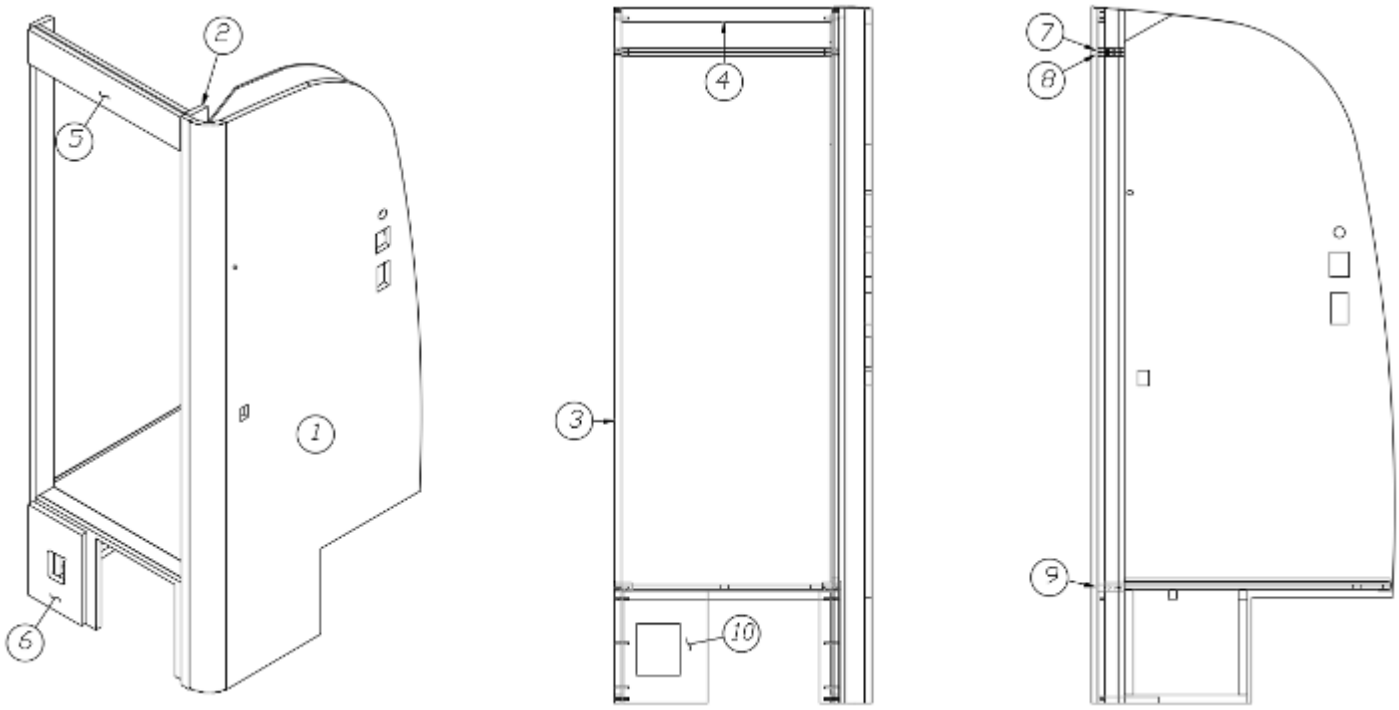

	967520	Refrigerator Cabinet
1.	967523	Refrigerator sub assembly
2.	967520-2	Panel, 3 x 79.12
3.	967520-3	Panel, 3 x 79.12
4.	967520-4	Panel, 24.06 x 1.75
5.	967520-5	Panel, 24.5 x 4.75
6.	967520-6	Panel, 10.06 x 12.63
7.	967520-7	Panel, 3 x 24.06
8.	967520-8	Panel, 3 x 24.06
9.	967520-9	Panel, 3 x 24.06
10.	967520-28	Panel, 24.06 x 13.5
	967519	Refrigerator stand
	454736	Refrigerator baffle
	365364-01	Edgebanding, .63", Ebony Woods
	365364-02	Edgebanding, .94", Ebony Woods

2018 INTERNATIONAL
FURNITURE, GALLEY

Refrigerator Cabinet, 30’ Serenity

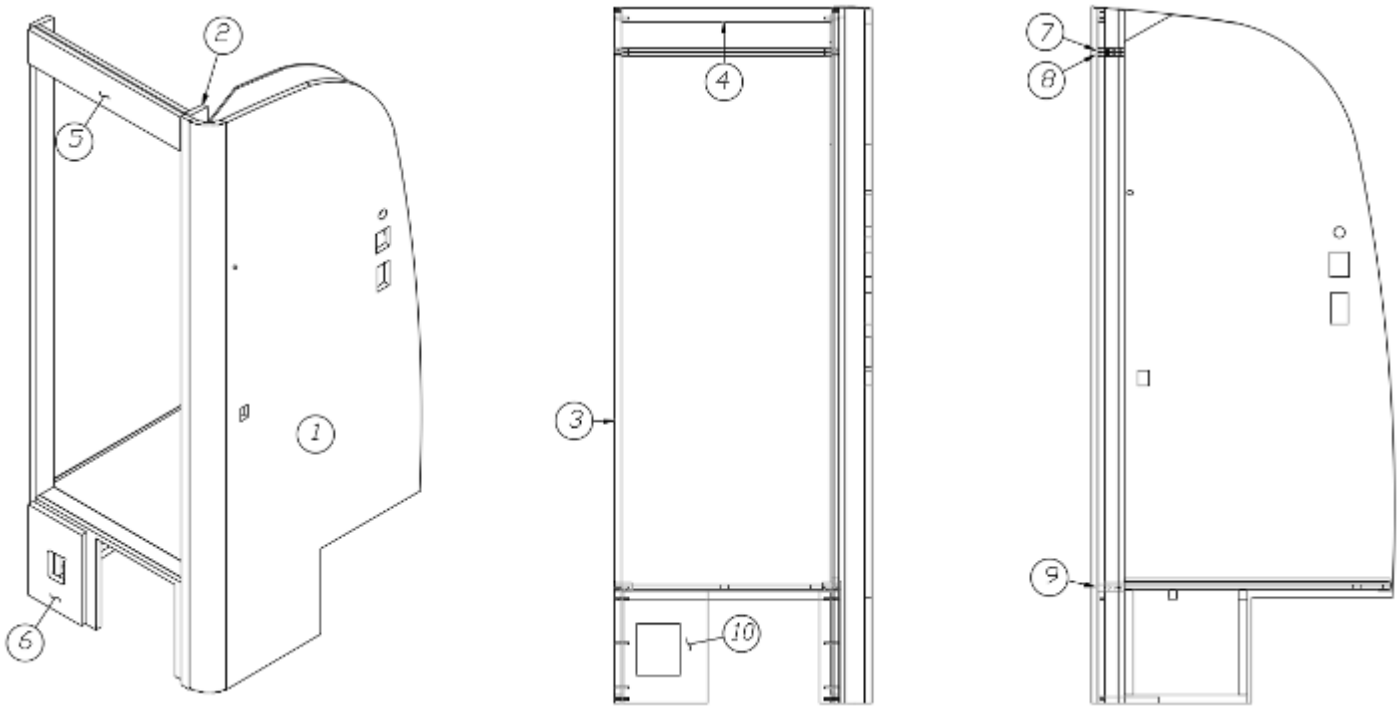

	967520-15	Refrigerator Cabinet
1.	967523	Refrigerator sub assembly
2.	967520-2	Panel, 3 x 79.12
3.	967520-3	Panel, 3 x 79.12
4.	967520-154	Panel, 24.06 x 1.75
5.	967520-155	Panel, 24.5 x 4.75
6.	967520-156	Panel, 10.06 x 12.63
7.	967520-7	Panel, 3 x 24.06
8.	967520-8	Panel, 3 x 24.06
9.	967520-9	Panel, 3 x 24.06
10.	967520-1528	Panel, 24.06 x 13.5
	967519	Refrigerator stand
	365344-01	Edgebanding, .63”, Pearl Bisque
	365344-02	Edgebanding, .94”, Pearl Bisque
	454736	Refrigerator baffle

Pantry, 23CB Signature

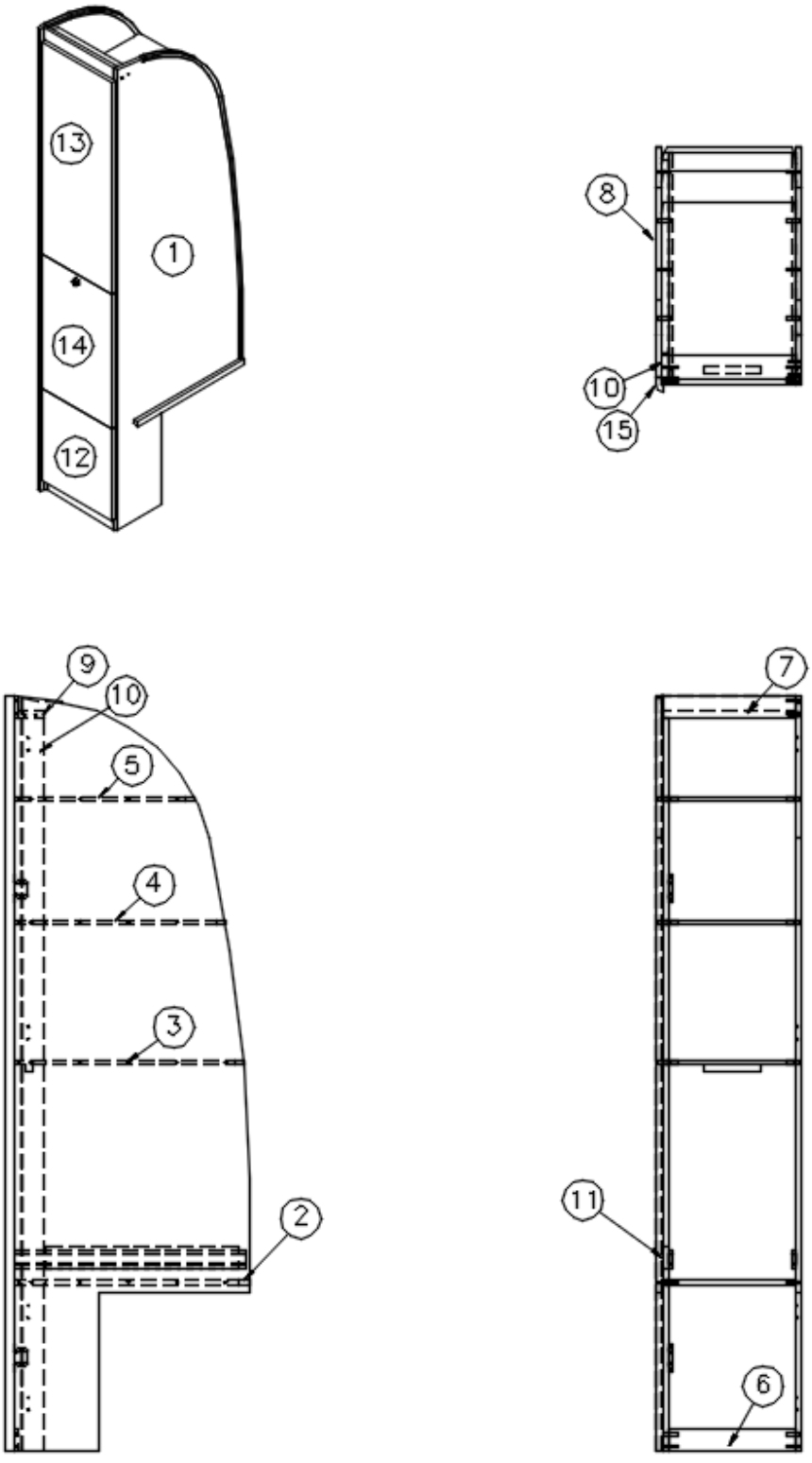

Parts Listed on Next Page

Pantry, 23CB Signature

	966936	Pantry Cabinet
1.	966936-1	Panel, 24.55 x 78.14
2.	966936-2	Panel, 14.01 x 24.27
3.	966936-3	Panel, 14.01 x 23.84
4.	966936-4	Panel, 14.01 x 21.96
5.	966936-5	Panel, 14.01 x 18.71
6.	966936-6	Panel, 13.26 x 2.25
7.	966936-7	Panel, 14.01 x 2.26
8.	966936-8	Panel, 23.79 x 77.9
9.	966936-9	Panel, 2.5 x 14.01
10.	966936-10	Panel, 3 x 75.88
11.	966936-11	Panel, 2.5 x 20
12.	966936-12	Door, 13.88 x 15.5
13.	966936-13	Door, 13.88 x 35.88
14.	966935	Slide-out pantry
15.	801706-0024	Corner trim, 90°, 1” radius, Ebony
	382029-03	Handle bar, 11.25"
	381607-11	Hinge, Self-close
	381228-02	Catch, Grabber door (5lb Pull)
	203138-01	Extrusion, Plastic, White
	203138-05	Extrusion, Plastic, ½”, Black
	381925	Drawer slide, 24”
	381408	Lock, Push button style, Black

Pantry, 23CB Serenity

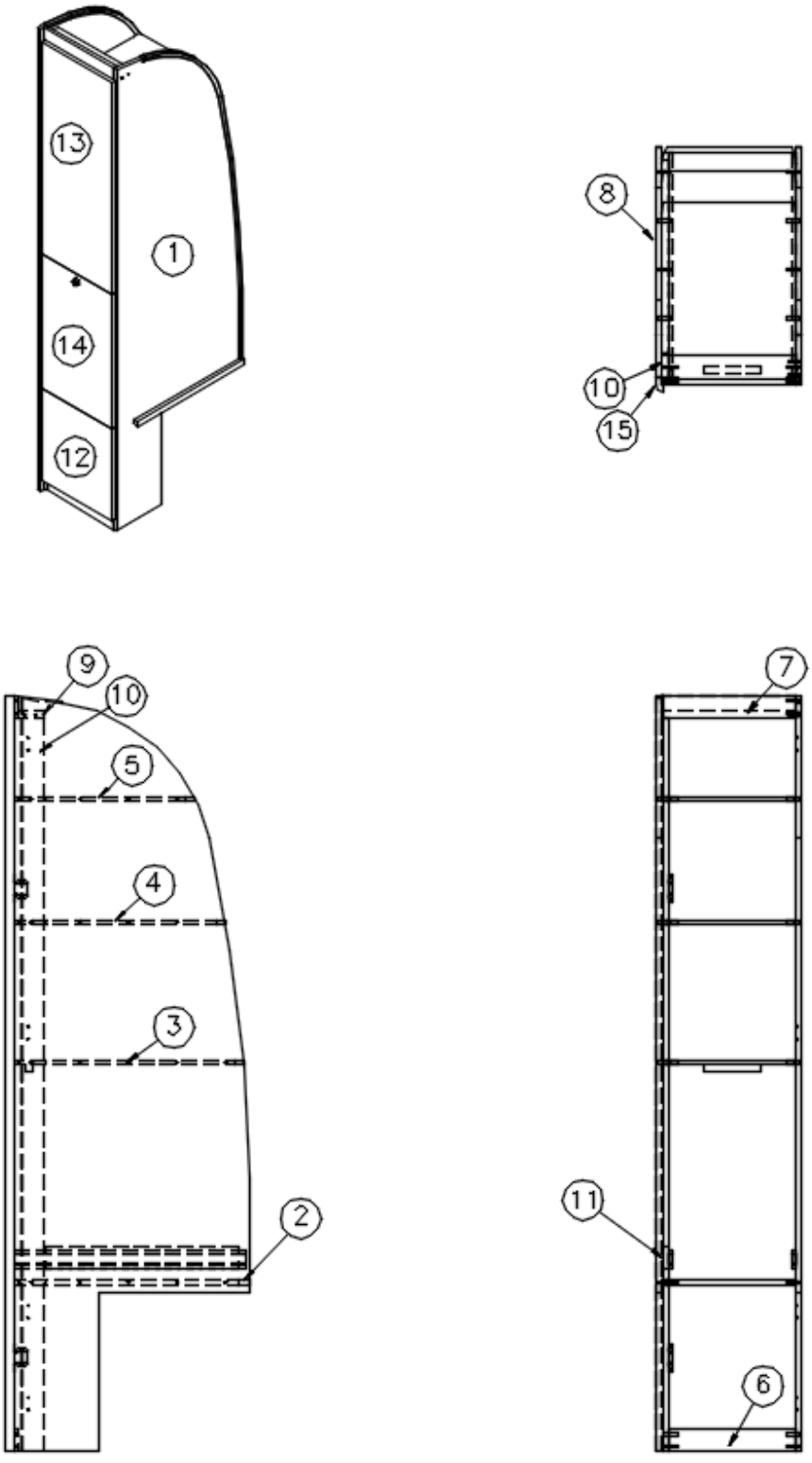

Parts Listed on Next Page

Pantry, 23CB Serenity

	966936-15	Pantry Cabinet
1.	966936-1	Panel, 24.55 x 78.14
2.	966936-2	Panel, 14.01 x 24.27
3.	966936-3	Panel, 14.01 x 23.84
4.	966936-4	Panel, 14.01 x 21.96
5.	966936-5	Panel, 14.01 x 18.71
6.	966936-156	Panel, 13.26 x 2.25
7.	966936-157	Panel, 14.01 x 2.26
8.	966936-158	Panel, 23.79 x 77.9
9.	966936-9	Panel, 2.5 x 14.01
10.	966936-10	Panel, 3 x 75.88
11.	966936-11	Panel, 2.5 x 20
12.	966936-1512	Door, 13.88 x 15.5
13.	966936-1513	Door, 13.88 x 35.88
14.	966935-15	Slide-out pantry
15.	801706-0018	Corner trim, 90°, 1” radius, Asian Sand
	382115	Pull, Flat Black
	381607-11	Hinge, Self-close
	381228-02	Catch, Grabber door (5lb Pull)
	203138-03	Extrusion, Plastic, Beige
	381925	Drawer slide, 24”
	381408	Lock, Push button, Black

2018 INTERNATIONAL
FURNITURE, GALLEY

Pantry, Slide-Out, 23CB Signature

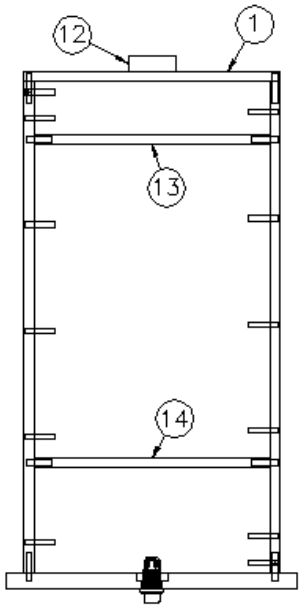

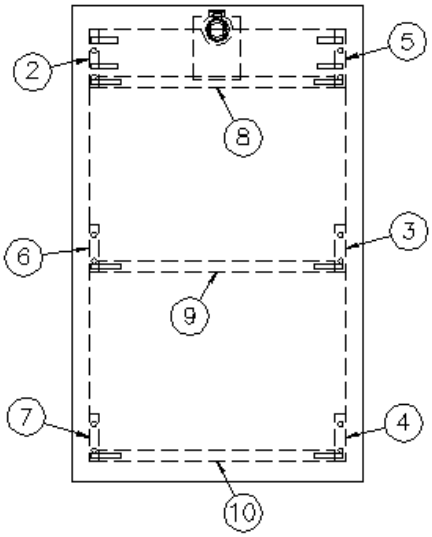

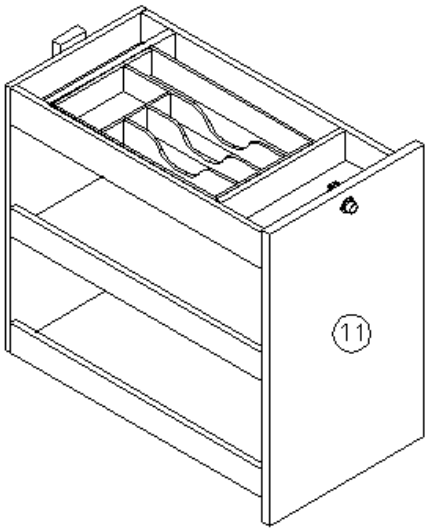

	966935	Slide-Out Pantry Cabinet
1.	966935-1	Panel, 12.25 x 20.5
2.	966935-2	Panel, 2.25 x 23.38
3.	966935-3	Panel, 2.25 x 23.38
4.	966935-4	Panel, 2.25 x 23.38
5.	966935-5	Panel, 2.25 x 23.38
6.	966935-6	Panel, 2.25 x 23.38
7.	966935-7	Panel, 2.25 x 23.38
8.	966935-8	Panel, 11.25 x 23.38
9.	966935-9	Panel, 11.25 x 23.38
10.	966935-10	Panel, 11.25 x 23.38
11.	966935-11	Panel, 13.88 x 22.62
12.	966935-12	Panel, 3 x 2.25
13.	966935-16	Panel 2.25 x 11.25
14.	966935-17	Panel 2.25 x 11.25
	968024	Insert, Cutlery drawer
	381408	Lock, Push button, Black

2018 INTERNATIONAL
FURNITURE, GALLEY

Pantry, Slide-Out, 23CB Serenity

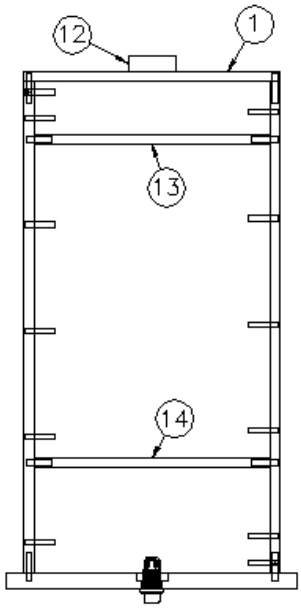

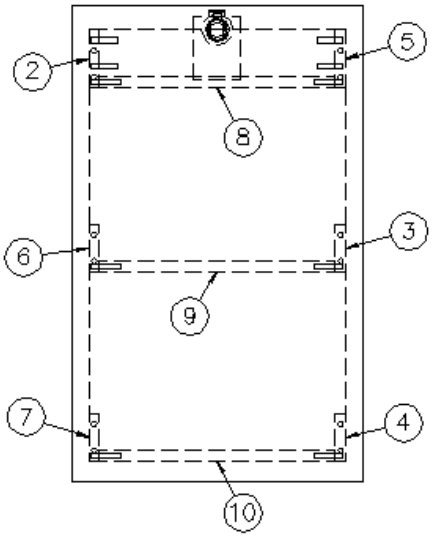

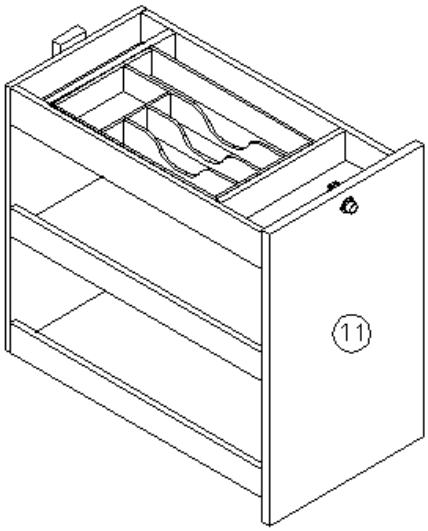

	966935-15	Slide-Out Pantry Cabinet
1.	966935-1	Panel, 12.25 x 20.5
2.	966935-2	Panel, 2.25 x 23.38
3.	966935-3	Panel, 2.25 x 23.38
4.	966935-4	Panel, 2.25 x 23.38
5.	966935-5	Panel, 2.25 x 23.38
6.	966935-6	Panel, 2.25 x 23.38
7.	966935-7	Panel, 2.25 x 23.38
8.	966935-8	Panel, 11.25 x 23.38
9.	966935-9	Panel, 11.25 x 23.38
10.	966935-10	Panel, 11.25 x 23.38
11.	966935-1511	Panel, 13.88 x 22.62
12.	966935-12	Panel, 3 x 2.25
13.	966935-16	Panel 2.25 x 11.25
14.	966935-17	Panel 2.25 x 11.25
	968024	Insert, Cutlery drawer
	381408	Lock, Push button style, Black

2018 INTERNATIONAL
FURNITURE, GALLEY

Pantry, 23FB Signature

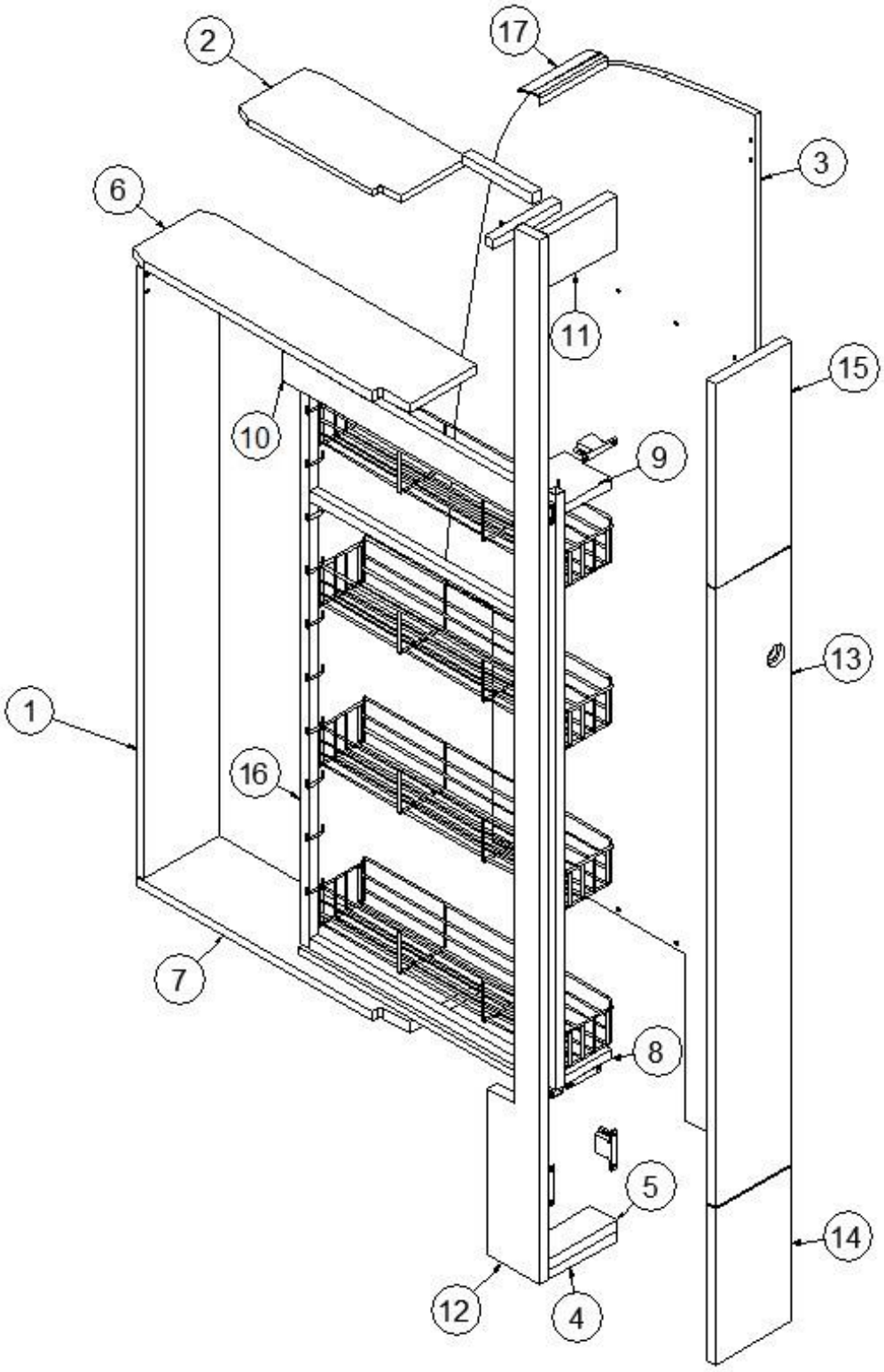

Parts Listed on Next Page

Pantry, 23FB Signature

	968347	Pantry Cabinet
1.	968347-1	Panel, 6.63 x 45.63
2.	968347-2	Panel, 5.88 x 13.75
3.	968347-3	Panel, 26.87 x 78.25
4.	968347-4	Panel, 2.25 x 5.88
5.	968347-5	Panel, 2.25 x 5.88
6.	968347-6	Panel, 23.63 x 6.63
7.	968347-7	Panel, 6.63 x 22.75
8.	968347-8	Panel, 4 x 4
9.	968347-9	Panel, 4 x 4
10.	968347-10	Panel, 20 x 2.25
11.	968347-11	Panel, 4 x 5.88
12.	968347-12	Panel, 4.5 x 78.25
13.	968347-13	Door, 6.5 x 46.25
14.	968347-14	Door, 6.5 x 11.63
15.	968347-15I	Door, 6.5 x 15.25
16.	381551-01	Pantry rack, White
17.	104821	Roof locker support
	381228-02	Catch, Grabber door (5lb Pull)
	381228	Catch, Grabber door
	381551-02	Wire basket, 4" wide, White
	381408	Lock, Push button, Black
	381607-11	Hinge, Self-close
	382029-00	Handle bar, 7.48”
	203138-05	Extrusion, Plastic ½”, Black

2018 INTERNATIONAL
FURNITURE, GALLEY

Pantry, 23FB Serenity

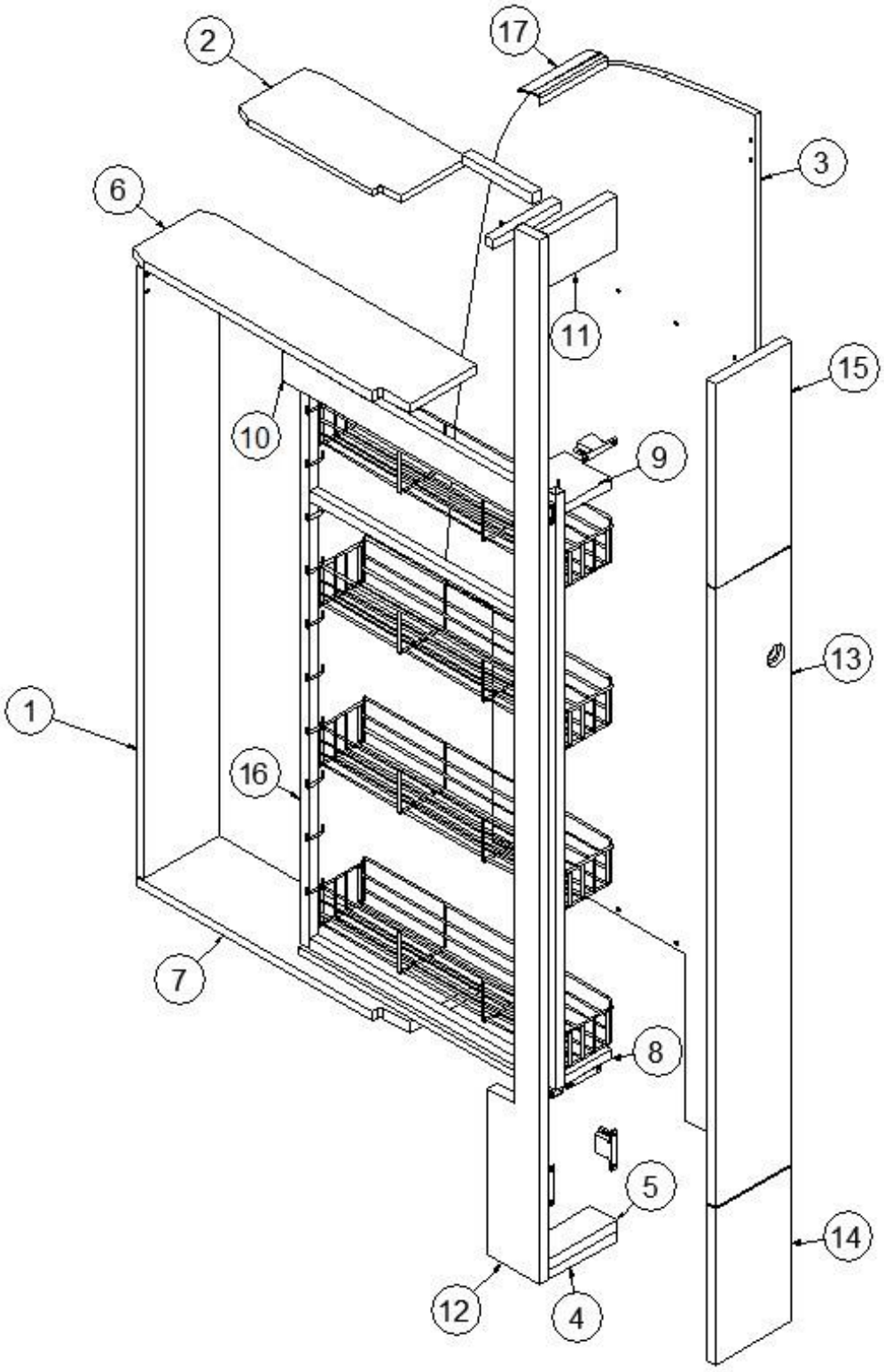

Parts Listed on Next Page

Pantry, 23FB Serenity

	968347-15	Pantry Cabinet
1.	968347-1	Panel, 6.63 x 45.63
2.	968347-2	Panel, 5.88 x 13.75
3.	968347-153	Panel, 26.87 x 78.25
4.	968347-4	Panel, 2.25 x 5.88
5.	968347-5	Panel, 2.25 x 5.88
6.	968347-6	Panel, 23.63 x 6.63
7.	968347-7	Panel, 6.63 x 22.75
8.	968347-8	Panel, 4 x 4
9.	968347-9	Panel, 4 x 4
10.	968347-10	Panel, 20 x 2.25
11.	968347-1511	Panel, 4 x 5.88
12.	968347-1512	Panel, 4.5 x 78.25
13.	968347-1513	Door, 6.5 x 46.25
14.	968347-1514	Door, 6.5 x 11.63
15.	968347-1515	Door, 6.5 x 15.25
16.	381551-01	Pantry rack, White
17.	104821	Roof locker support
	381228-02	Catch, Grabber door (5lb Pull)
	381228	Catch, Grabber door
	381551-02	Wire basket, 4" wide, White
	381408	Lock, Push button, Black
	381607-11	Hinge, Self-close
	382115	Pull, Flat Black
	203138-03	Extrusion, Plastic ½”, Beige

2018 INTERNATIONAL
FURNITURE, GALLEY

Pantry, 25’ Signature

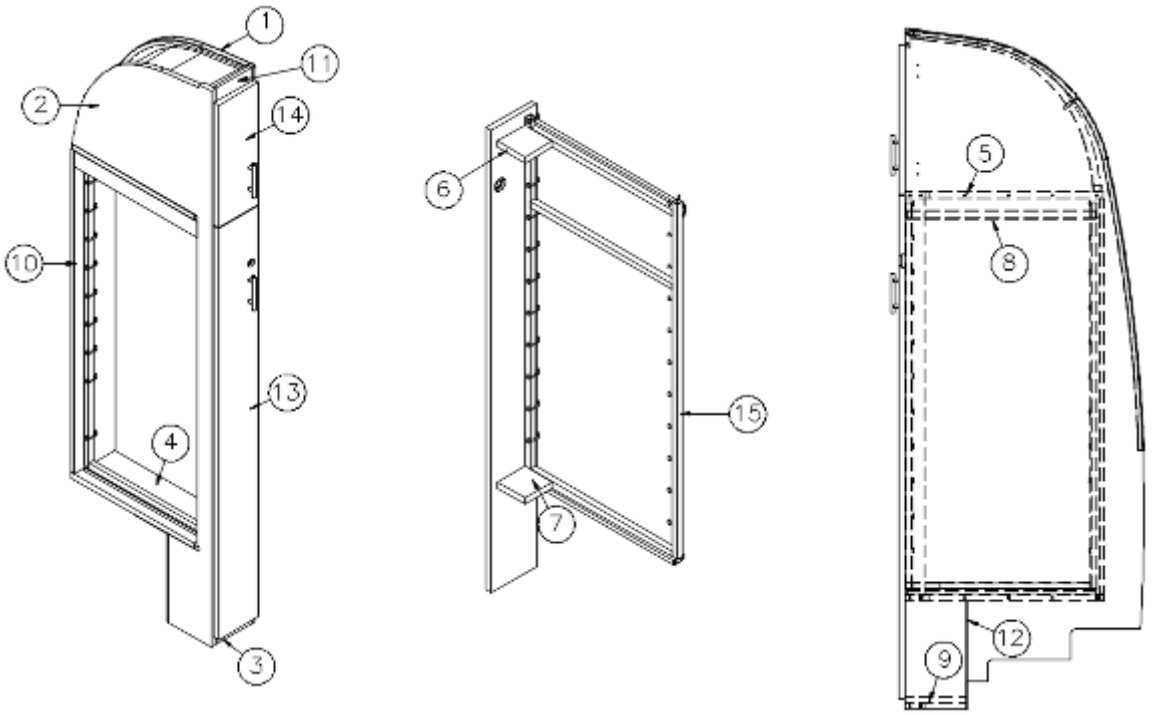

	967726	Pantry Cabinet
1.	967726-1	Panel, 27.25 x 78.23
2.	967726-2	Panel, 22.63 x 78.23
3.	967726-3	Panel, 2.25 x 5.88
4.	967726-4	Panel, 6.63 x 22.75
5.	967726-5	Panel, 6.63 x 22.63
6.	967726-6	Panel, 4 x 4
7.	967726-7	Panel, 4 x 4
8.	967726-8	Panel, 2.25 x 20
9.	967726-9	Panel, 7 x 5.88
10.	967726-10	Panel, 6.63 x 45.5
11.	967726-11	Panel, 2.25 x 5.88
12.	967726-12	Panel, 6.63 x 12.5
13.	967726-13	Door, 6.5 x 58
14.	967726-14	Door, 6.5 x 17.25
15.	381551-01	Pantry rack, White
	381408	Lock, Push button, Black
	382029-05	Handle bar, 21.33"
	381228-02	Catch, Grabber door (5lb Pull)
	381551-02	Wire basket, 4" wide, White
	203138-05	Extrusion, Plastic .5", Black
	381607-11	Hinge, Self-close

2018 INTERNATIONAL
FURNITURE, GALLEY

Pantry, 25’ Serenity

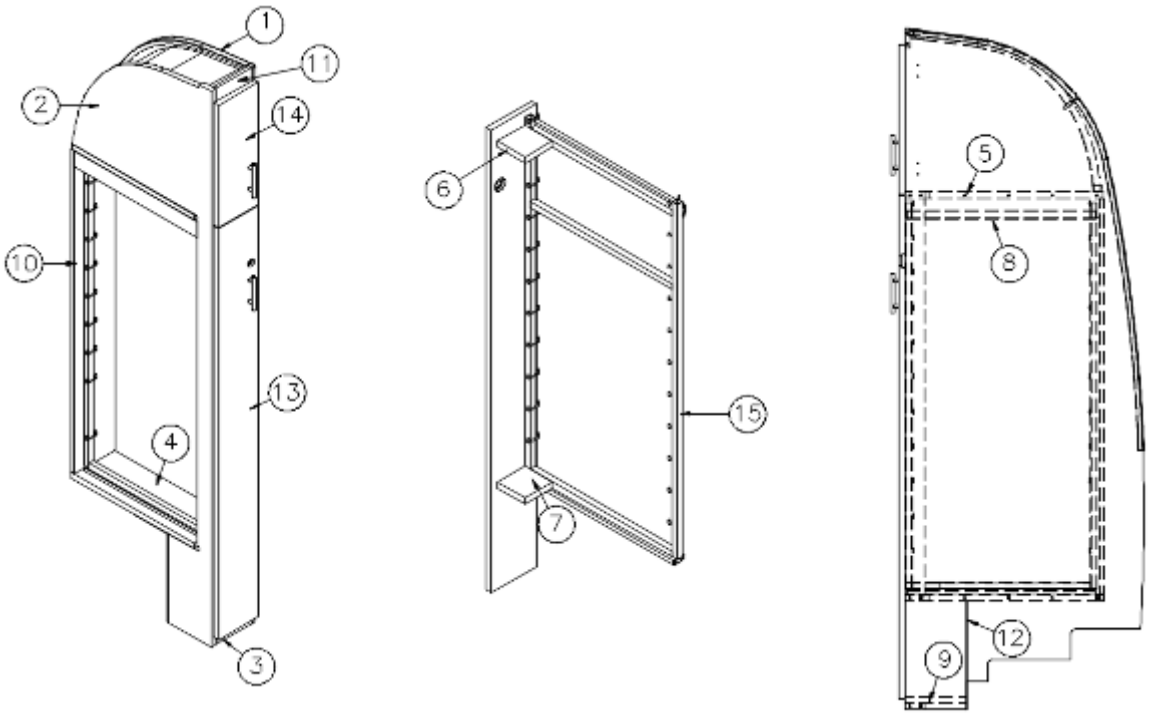

	967726-15	Pantry Cabinet
1.	967726-151	Panel, 27.25 x 78.23
2.	967726-2	Panel, 22.63 x 78.23
3.	967726-3	Panel, 2.25 x 5.88
4.	967726-4	Panel, 6.63 x 22.75
5.	967726-5	Panel, 6.63 x 22.63
6.	967726-6	Panel, 4 x 4
7.	967726-7	Panel, 4 x 4
8.	967726-8	Panel, 2.25 x 20
9.	967726-9	Panel, 7 x 5.88
10.	967726-10	Panel, 6.63 x 45.63
11.	967726-1511	Panel, 2.25 x 5.88
12.	967726-1512	Panel, 6.63 x 12.5
13.	967726-1513	Door, 6.5 x 58
14.	967726-1514	Door, 6.5 x 17.25
15.	381551-01	Pantry rack, White
	381408	Lock, Push button, Black
	382115	Pull, Flat Black
	381228-02	Catch, Grabber door (5lb Pull)
	381551-02	Wire basket, 4" wide, White
	203138-03	Extrusion, Plastic .5", Beige
	381607-11	Hinge, Self-close

2018 INTERNATIONAL
FURNITURE, GALLEY

Pantry, 25FB Signature

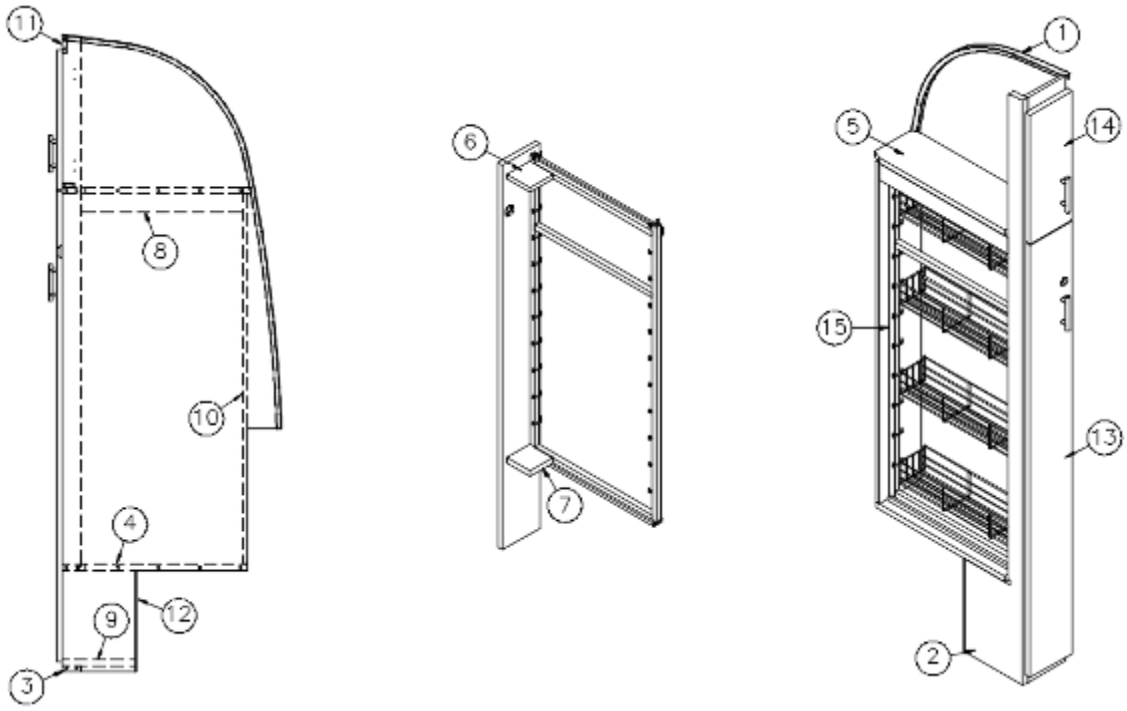

	966904	Pantry Cabinet
1.	966904-1	Panel, 26.88 x 78.29
2.	966904-2	Panel, 9 x 78.43
3.	966904-3	Panel, 2.25 x 5.88
4.	966904-4	Panel, 6.63 x 22.75
5.	966904-5	Panel, 6.63 x 23.38
6.	966904-6	Panel, 4 x 4
7.	966904-7	Panel, 4 x 4
8.	966904-8	Panel, 2.25 x 20
9.	966904-9	Panel, 9 x 5.88
10.	966904-10	Panel, 6.63 x 45.63
11.	966904-11	Panel, 5.88 x 2.25
12.	966904-12	Panel, 7.13 x 12.5
13.	966904-13	Door, 6.5 x 58
14.	966904-14	Door, 6.5 x 17.25
15.	381551-01	Pantry rack, White
	382029-00	Handle bar, 7.48"
	381228-02	Catch, Grabber door (5lb Pull)
	381607-11	Hinge, Self-close
	381551-02	Wire basket, 4" wide, White
	381408	Lock, Push button, Black
	203138-05	Extrusion, Plastic ½”, Black

2018 INTERNATIONAL
FURNITURE, GALLEY

Pantry, 25FB Serenity

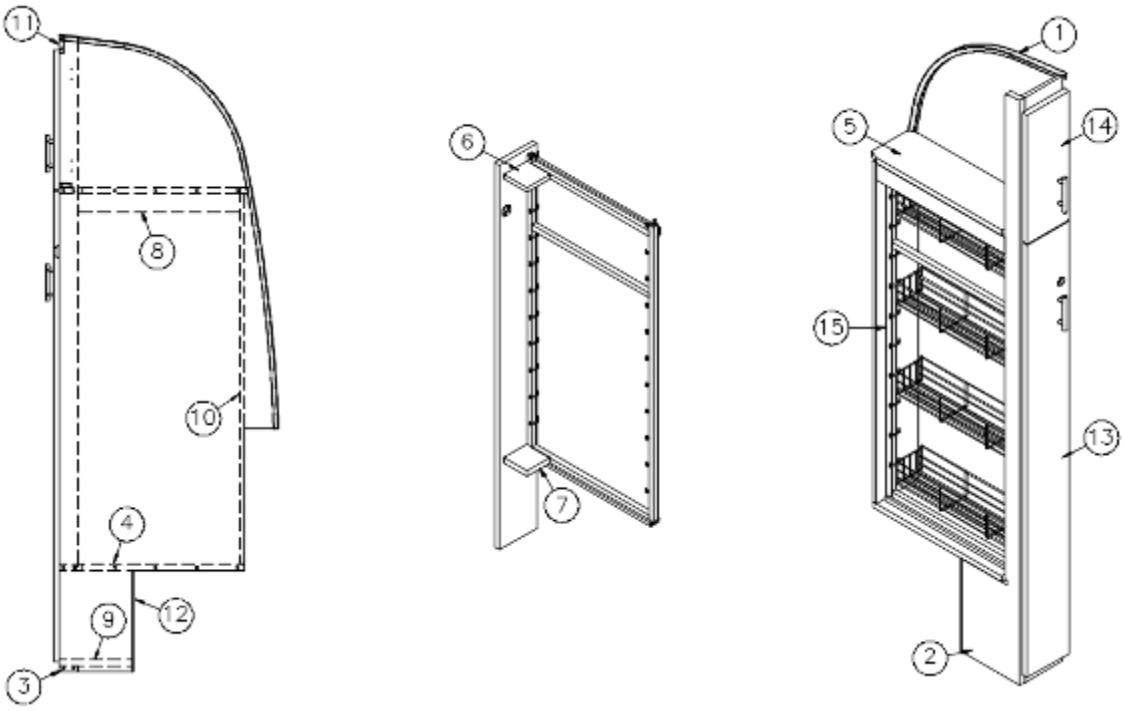

	966904-15	Pantry Cabinet
1.	966904-151	Panel, 26.88 x 78.29
2.	966904-2	Panel, 9 x 78.43
3.	966904-3	Panel, 2.25 x 5.88
4.	966904-4	Panel, 6.63 x 22.75
5.	966904-5	Panel, 6.63 x 23.38
6.	966904-6	Panel, 4 x 4
7.	966904-7	Panel, 4 x 4
8.	966904-8	Panel, 2.25 x 20
9.	966904-9	Panel, 9 x 5.88
10.	966904-10	Panel, 6.63 x 45.63
11.	966904-1511	Panel, 5.88 x 2.25
12.	966904-1512	Panel, 7.13 x 12.5
13.	966904-1513	Door, 6.5 x 58
14.	966904-1514	Door, 6.5 x 17.25
15.	381551-01	Pantry rack, White
	382115	Pull, Flat Black
	381228-02	Catch, Grabber door (5lb Pull)
	381607-11	Hinge, Self-close
	381551-02	Wire basket, 4" wide, White
	381408	Lock, Push button, Black
	203138-03	Extrusion, Plastic, ½”, Beige

2018 INTERNATIONAL
FURNITURE, GALLEY

Pantry, with Microwave, 27FB Signature

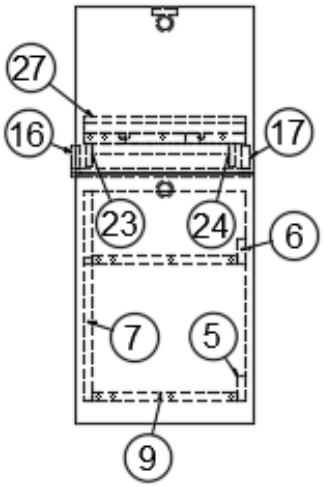

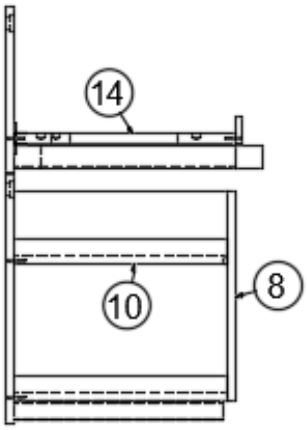

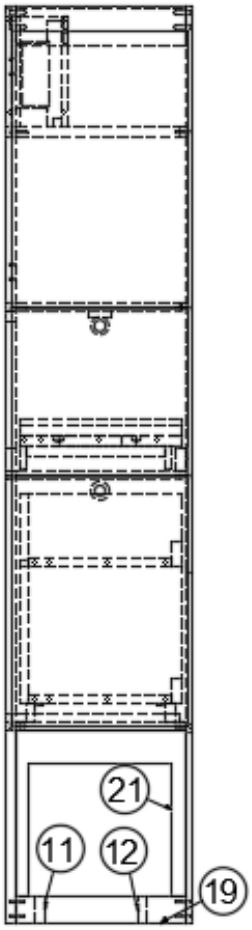

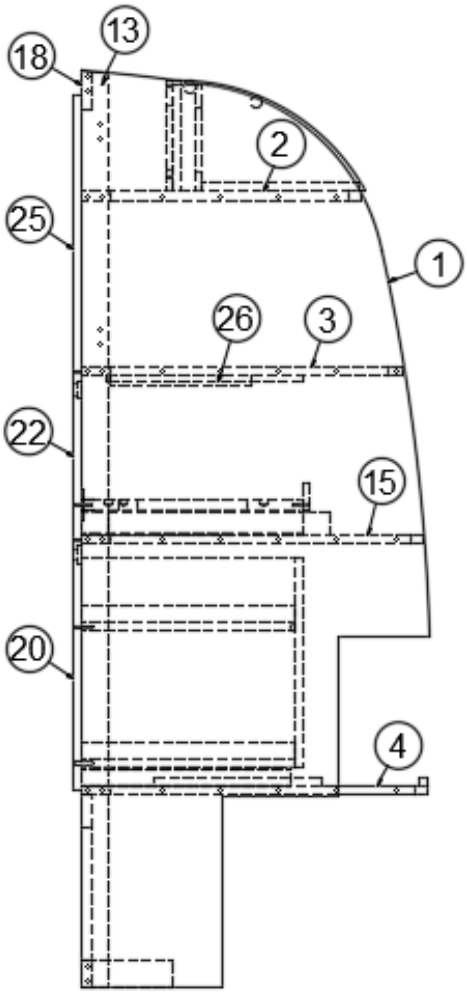

Parts Listed on Next Page

2018 INTERNATIONAL
FURNITURE, GALLEY

Pantry, with Microwave, 27FB Signature

	966898	Pantry Cabinet with Microwave
1.	966898-1	Panel, 29.87 x 78.7
2.	966898-2	Panel, 24 x 15.38
3.	966898-3	Panel, 27.5 x 15.38
4.	966898-4	Panel, 29.75 x 15.38
5.	966898-5	Panel, 2.25 x 18.25
6.	966898-6	Panel, 2.25 x 18.25
7.	966898-7	Panel, 18 x 18.25
8.	966898-8	Panel, 18 x 13.88
9.	966898-9	Panel, 12.38 x 18.25
10.	966898-10	Panel, 12.38 x 18.25
11.	966898-11	Panel, 2.25 x 7
12.	966898-12	Panel, 2.25 x 7
13.	966898-13	Panel, 2.25 x 78.63
14.	966898-14	Panel, 19 x 13.88
15.	966898-15I	Panel, 29.31 x 15.38
16.	966898-16	Panel, 2 x 19
17.	966898-17	Panel, 2 x 19
18.	966898-18	Panel, 3.27 x 14.63
19.	966898-19	Panel, 2.25 x 14.63
20.	966898-20	Door, 21.38 x 15.25
21.	966898-21	Panel, 14.63 x 14.22
22.	966898-24	Door, 14.31 x 15.25
23.	966898-25	Panel, 2 x 19
24.	966898-26	Panel, 2 x 19
25.	966898-27	Door, 15.25 x 23.63
26.	966898-42	Panel, 2 x 17
27.	966898-54	Panel, 2.25 x 13.88
	381944-01	Slide, 18", Per set
	381408	Lock, Push button, Black
	203445	T-molding, Black flexible plastic
	114812	Aluminum angle, 1” x 1”
	381192	Drawer slide, 18”, Pair
	382029-04	Handle bar, 15"
	381607-11	Hinge, Self-close
	381228-02	Catch, Grabber door (5lb Pull)

2018 INTERNATIONAL
FURNITURE, GALLEY

Pantry, with Microwave, 27FB Serenity

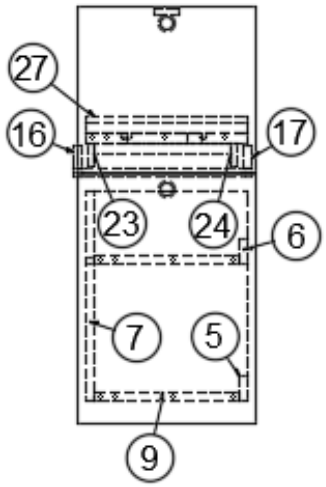

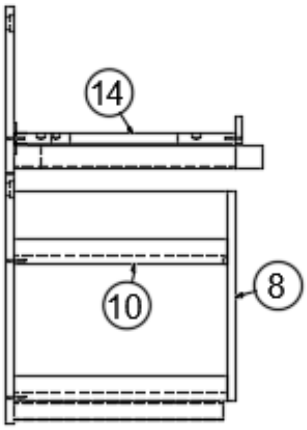

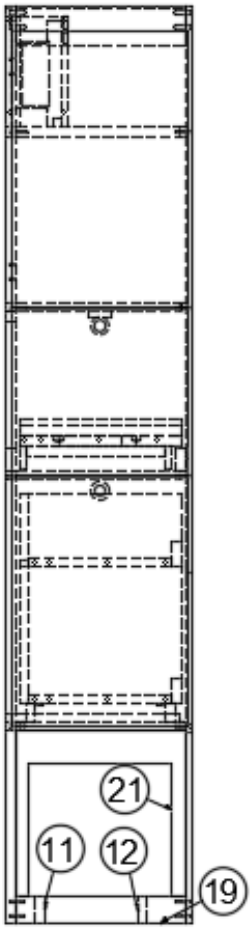

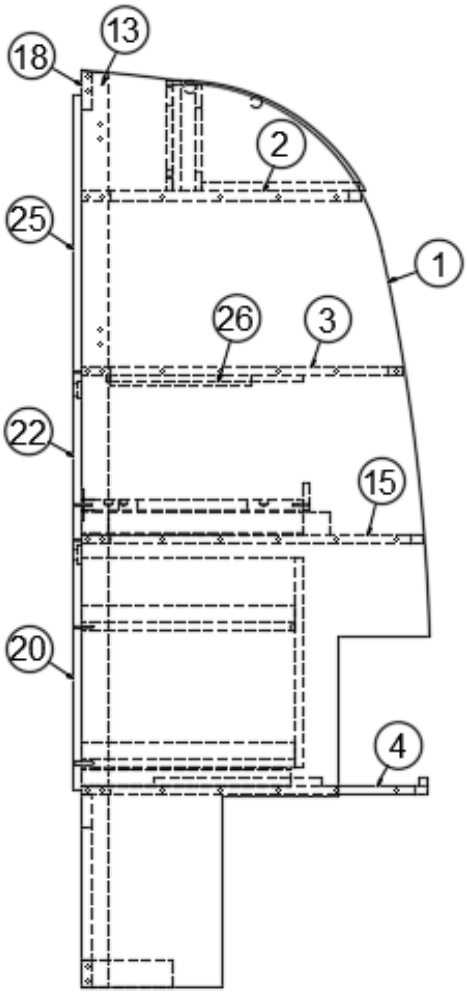

Parts Listed on Next Page

2018 INTERNATIONAL
FURNITURE, GALLEY

Pantry, with Microwave, 27FB Serenity

	966898-15	Pantry Cabinet with Microwave
1.	966898-151	Panel, 29.87 x 78.7
2.	966898-152	Panel, 24 x 15.38
3.	966898-153	Panel, 27.5 x 15.38
4.	966898-154	Panel, 29.75 x 15.38
5.	966898-155	Panel, 2.25 x 18.25
6.	966898-156	Panel, 2.25 x 18.25
7.	966898-157	Panel, 18 x 18.25
8.	966898-158	Panel, 18 x 13.88
9.	966898-159	Panel, 12.38 x 18.25
10.	966898-1510	Panel, 12.38 x 18.25
11.	966898-1511	Panel, 2.25 x 7
12.	966898-1512	Panel, 2.25 x 7
13.	966898-1513	Panel, 2.25 x 78.63
14.	966898-1514	Panel, 19 x 13.88
15.	966898-1515	Panel, 29.31 x 15.38
16.	966898-1516	Panel, 2 x 19
17.	966898-1517	Panel, 2 x 19
18.	966898-1518	Panel, 3.27 x 14.63
19.	966898-1519	Panel, 2.25 x 14.63
20.	966898-1520	Door, 21.38 x 15.25
21.	966898-1521	Panel, 1 x 11.31
22.	966898-1524	Door, 14.31 x 15.25
23.	966898-1525	Panel, 2 x 19
24.	966898-1526	Panel, 2 x 19
25.	966898-1527	Door, 15.25 x 23.63
26.	966898-1542	Panel, 2 x 17
27.	966898-54	Panel, 2.25 x 13.88
	381944-01	Slide, 18", Per set
	381408	Lock, Push button, Black
	203445	T-molding, Black flexible plastic
	114812	Aluminum angle, 1” x 1”
	381192	Drawer slide, 18”, Pair
	382115	Pull, Flat Black
	381607-11	Hinge, Self-close
	381228-02	Catch, Grabber door (5lb Pull)

2018 INTERNATIONAL
FURNITURE, GALLEY

Pantry, Without Microwave, 27FB Signature

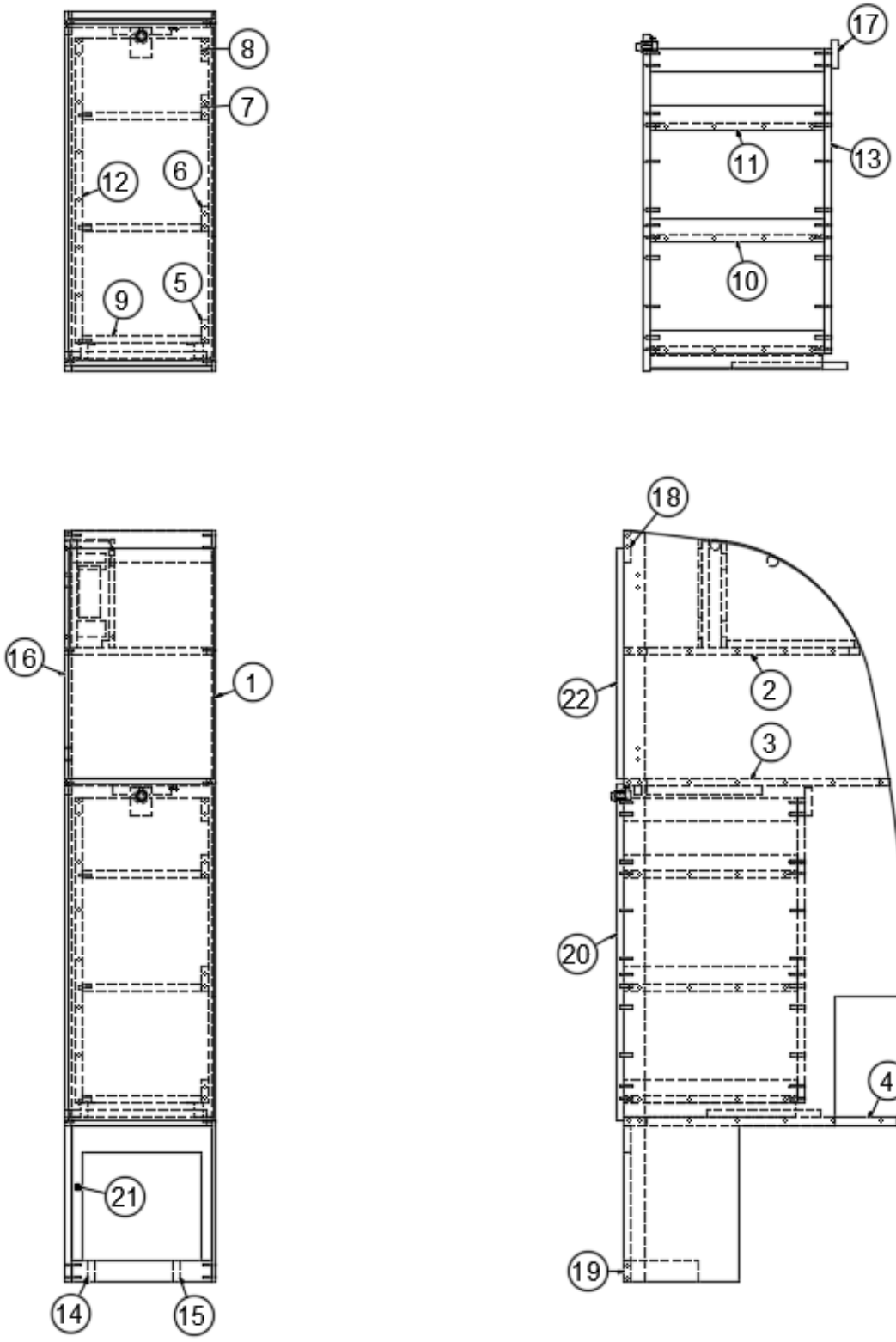

Parts Listed on Next Page

2018 INTERNATIONAL
FURNITURE, GALLEY

Pantry, Without Microwave, 27FB Signature

	966886	Pantry Cabinet without microwave
1.	966886-1	Panel, 29.87 x 78.42
2.	966886-2	Panel, 24.75 x 15.38
3.	966886-3	Panel, 27.75 x 15.38
4.	966886-4	Panel, 29.75 x 15.38
5.	966886-5	Panel, 2.5 x 18.25
6.	966886-6	Panel, 2.5 x 18.25
7.	966886-7	Panel, 2.5 x 18.25
8.	966886-8	Panel, 2.5 x 18.25
9.	966886-9	Panel, 18.25 x 12.38
10.	966886-10	Panel, 18.25 x 12.38
11.	966886-11	Panel, 18.25 x 12.38
12.	966886-12	Panel, 18.25 x 32
13.	966886-13	Panel, 13.88 x 32
14.	966886-14	Panel, 2.25 x 7
15.	966886-15I	Panel, 2.25 x 7
16.	966886-16	Panel, 2.25 x 78.72
17.	966886-17	Panel, 2.25 x 3
18.	966886-18	Panel, 3.129 x 14.63
19.	966886-19I	Panel, 2.25 x 14.63
20.	966886-20	Door, 15.25 x 35.31
21.	966886-21	Panel, 14.63 x 14.22
22.	966886-24	Door, 15.25 x 24.13
	381944-01	Slide, 18", Per set
	381408	Lock, Push button, Black
	203445	T-molding, Black
	382029-04	Handle bar, 15"
	381607-11	Hinge, Self-close
	381228-02	Catch, Grabber door (5lb Pull)

2018 INTERNATIONAL
FURNITURE, GALLEY

Pantry, Without Microwave, 27FB Serenity

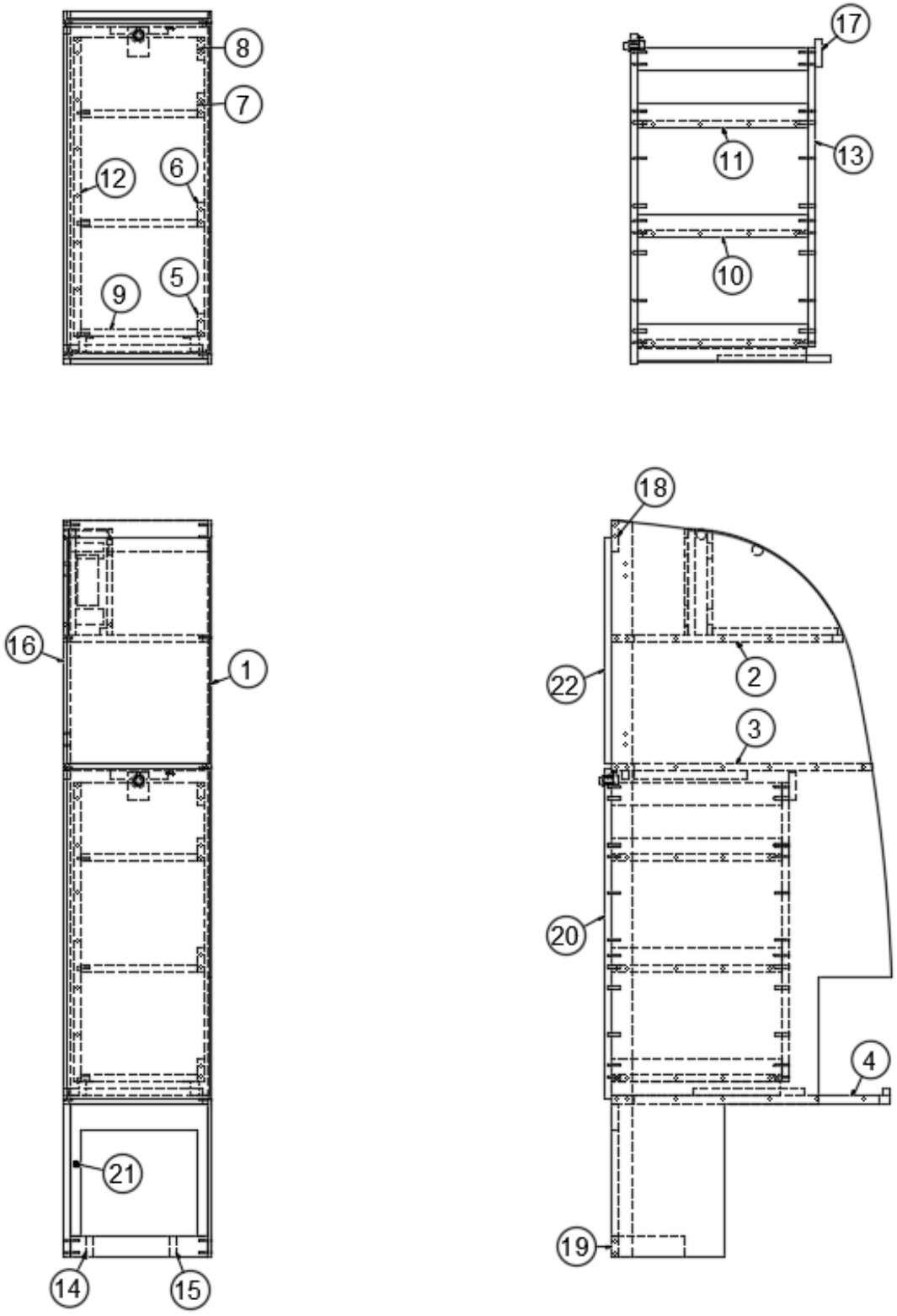

Parts Listed on Next Page

2018 INTERNATIONAL
FURNITURE, GALLEY

Pantry, Without Microwave, 27FB Serenity

	966886-15	Pantry Cabinet without Microwave
1.	966886-151	Panel, 29.87 x 78.42
2.	966886-2	Panel, 24.75 x 15.38
3.	966886-3	Panel, 27.75 x 15.38
4.	966886-4	Panel, 29.75 x 15.38
5.	966886-5	Panel, 2.5 x 18.25
6.	966886-6	Panel, 2.5 x 18.25
7.	966886-7	Panel, 2.5 x 18.25
8.	966886-8	Panel, 2.5 x 18.25
9.	966886-9	Panel, 18.25 x 12.38
10.	966886-10	Panel, 18.25 x 12.38
11.	966886-11	Panel, 18.25 x 12.38
12.	966886-12	Panel, 18.25 x 32
13.	966886-13	Panel, 13.88 x 32
14.	966886-14	Panel, 2.25 x 7
15.	966886-15I	Panel, 2.25 x 7
16.	966886-16	Panel, 2.25 x 78.72
17.	966886-17	Panel, 2.25 x 3
18.	966886-1518	Panel, 3.129 x 14.63
19.	966886-1519	Panel, 2.25 x 14.63
20.	966886-1520	Panel, 15.25 x 35.31
21.	966886-1521	Panel, 14.63 x 14.22
22.	966886-1524	Door, 15.25 x 24.13
	381944-01	Slide, 18", Per set
	381408	Lock, Push button, Black
	203445	T-molding, Black
	382115	Pull, Flat Black
	381607-11	Hinge, Self-close
	381228-02	Catch, Grabber door (5lb Pull)

2018 INTERNATIONAL
FURNITURE, GALLEY

Pantry, Slide-Out, 30’ Signature

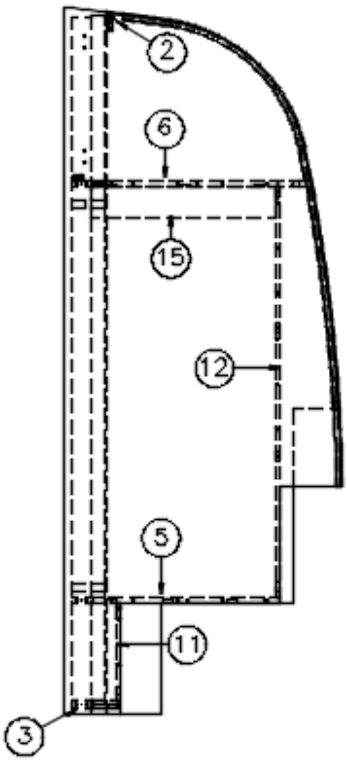

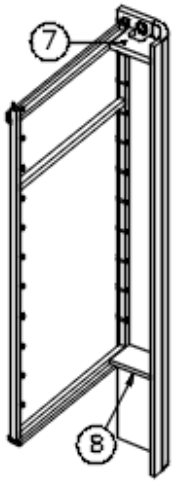

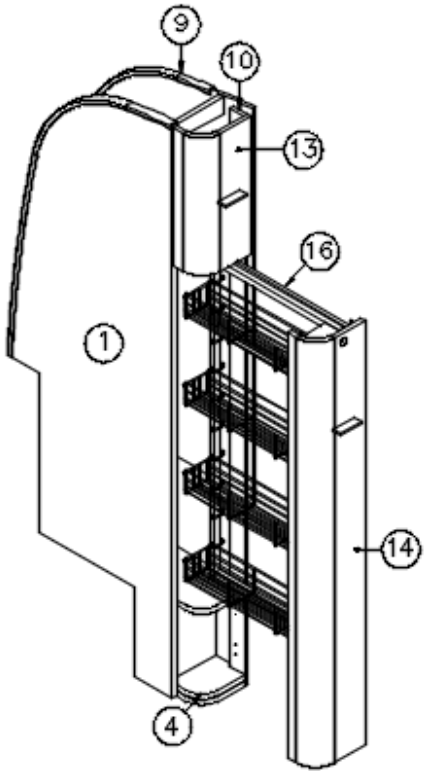

Parts Listed on Next Page

Pantry, Slide-Out, 30’ Signature

	967529	Slide-out Pantry Cabinet
1.	967529-1	Panel, 25.88 x 78.17
2.	967529-2	Panel, 7.25 x 2.25
3.	967529-3	Panel, 4 x 6.75
4.	967529-4	Panel, 13.5 x 7.25
5.	967529-5	Panel, 23.25 x 7.25
6.	967529-6	Panel, 25.5 x 7.25
7.	967529-7	Panel, 5.38 x 3.75
8.	967529-8	Panel, 5.38 x 3.75
9.	967529-9	Panel, 30.82 x 78.77
10.	967529-10	Panel, 2.25 x 77.75
11.	967529-11	Panel, 7.25 x 10.88
12.	967529-12	Panel, 7.25 x 45.63
13.	967304-01	Door, 18.75"
14.	967304-02	Door, 58"
15.	967529-27	Panel, 3.5 x 20.5
16.	381551-01	Pantry rack, White
	382044	Handle, Brushed Nickel
	381228-02	Catch, Grabber door (5lb Pull)
	381408	Lock, Push button, Black
	381551-02	Wire basket, 4" wide, White
	203138-05	Extrusion, Plastic .5", Black
	203464	Trim panel, .75", Black
	382057	Knockdown, 8mm
	381607-11	Hinge, Self-close
	365364-01	Edgebanding, .63", Ebony Woods
	365364-02	Edgebanding, .94", Ebony Woods

2018 INTERNATIONAL
FURNITURE, GALLEY

Pantry, Slide-Out, 30’ Serenity

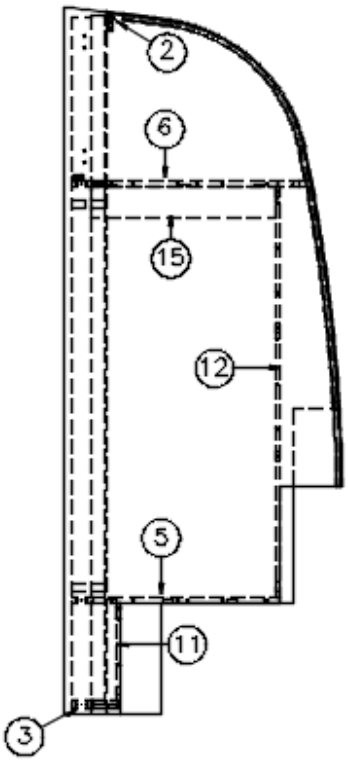

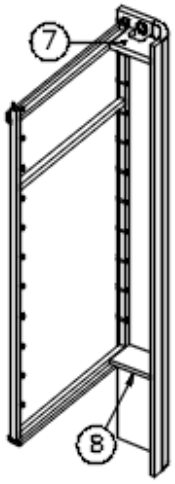

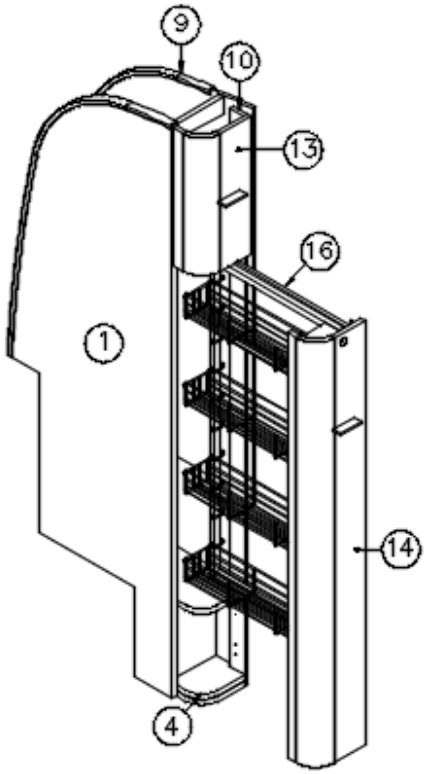

Parts Listed on Next Page

Pantry, Slide-Out, 30’ Serenity

	967529-15	Slide-out Pantry Cabinet
1.	967529-151	Panel, 25.88 x 78.17
2.	967529-152	Panel, 7.25 x 2.25
3.	967529-3	Panel, 4 x 6.75
4.	967529-4	Panel, 13.5 x 7.25
5.	967529-5	Panel, 23.25 x 7.25
6.	967529-6	Panel, 25.5 x 7.25
7.	967529-7	Panel, 5.38 x 3.75
8.	967529-8	Panel, 5.38 x 3.75
9.	967529-159	Panel, 30.82 x 78.77
10.	967529-10	Panel, 2.25 x 77.75
11.	967529-11	Panel, 7.25 x 10.88
12.	967529-12	Panel, 7.25 x 45.63
13.	967304-01	Door, 18.75"
14.	967304-02	Door, 58"
15.	967529-27	Panel, 3.5 x 20.5
16.	381551-01	Pantry rack, White
	382115	Pull, Flat Black
	381228-02	Catch, Grabber door (5lb Pull)
	381408	Lock, Push button, Black
	381551-02	Wire basket, 4" wide, White
	203138-03	Extrusion, Plastic .5", Beige
	203464-02	Trim panel, .75”, Beige
	381607-11	Hinge, Self-close
	365344-01	Edgebanding, .63", Pearl Bisque
	365344-02	Edgebanding, .94", Pearl Bisque
	382057	Knockdown, 8mm

Flip Shelf, Signature

967989-01	Galley flip shelf
602351-01	Flip shelf top, Corian, Ecru

Flip Shelf, Serenity

967989-02	Galley flip shelf
602351-06	Flip shelf top, Corian, Sorrel

2018 INTERNATIONAL
FURNITURE, GALLEY

Water Heater Cover, 30’ Signature

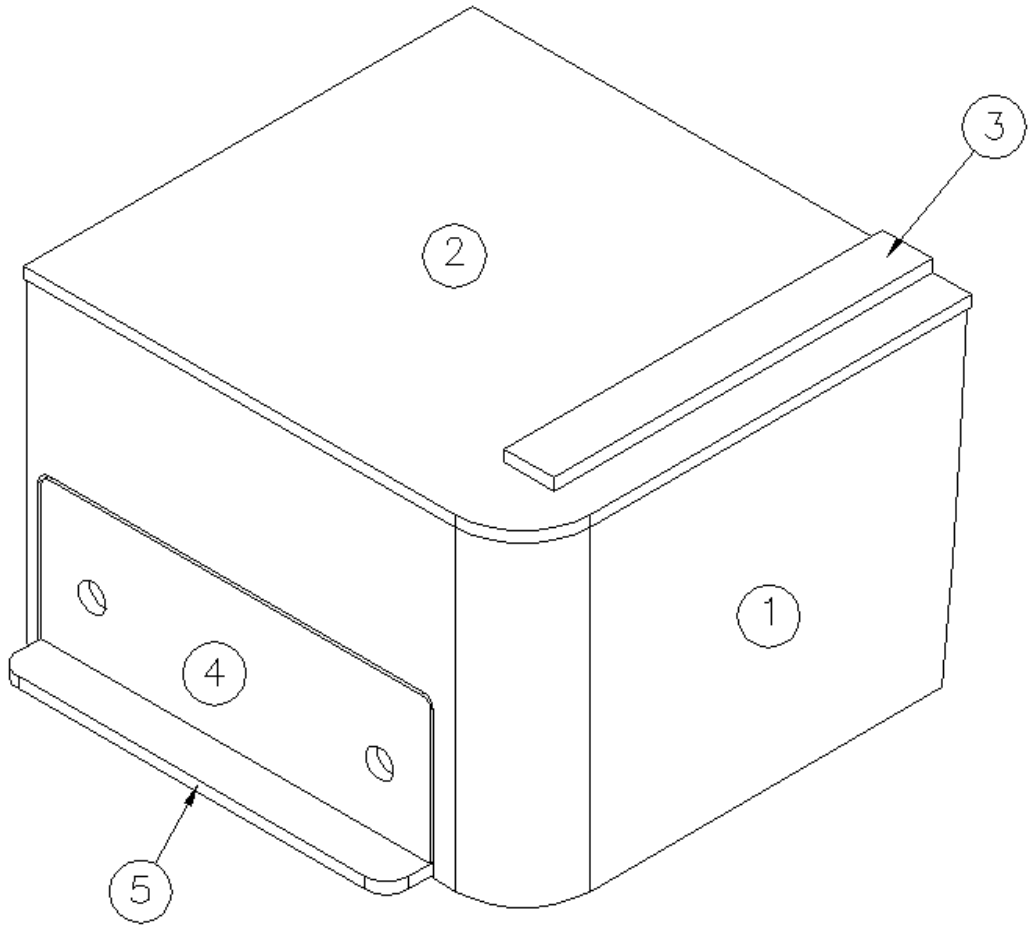

	967630	Water Heater Cover
1.	967630-4	Panel, Water cover
2.	967630-5	Panel, 22.38 x 20.13
3.	967630-6	Panel, 2.25 x 17
4.	967630-7	Panel, 4.62 x 9.62
5.	967630-11	Panel, 2.5 x 17.52
	381228-02	Catch, Grabber door (5lb Pull)
	365364-01	Edgebanding, .63”, Ebony Woods

Water Heater Cover, 30’ Serenity

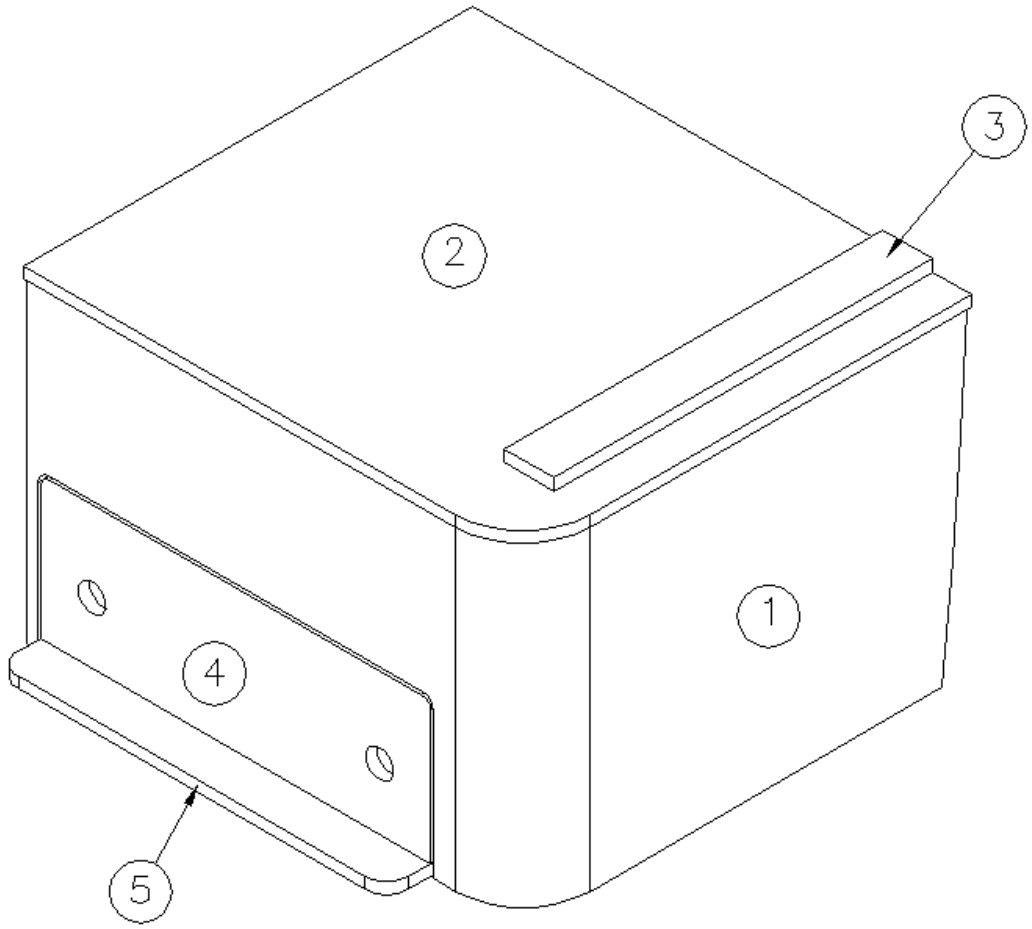

	967630-15	Water Heater Cover
1.	967630-154	Panel, Water cover
2.	967630-155	Panel, 22.38 x 20.13
3.	967630-156	Panel, 2.25 x 17
4.	967630-157	Panel, 4.62 x 9.62
5.	967630-1511	Panel, 2.5 x 17.52
	381228-02	Catch, Grabber door (5lb Pull)
	365344-01	Edgebanding, .63", Pearl Bisque

2018 INTERNATIONAL
FURNITURE, GALLEY

Roof Locker, Galley, 23CB Signature

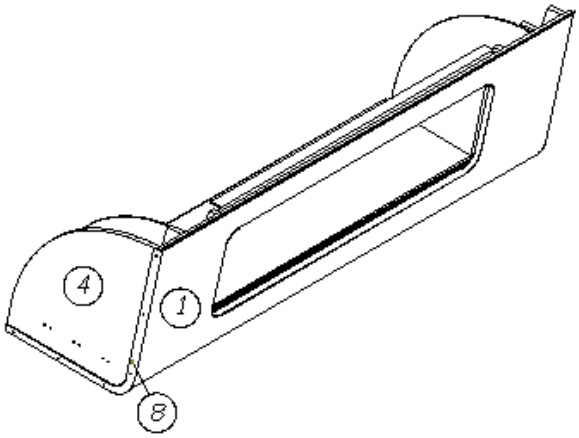

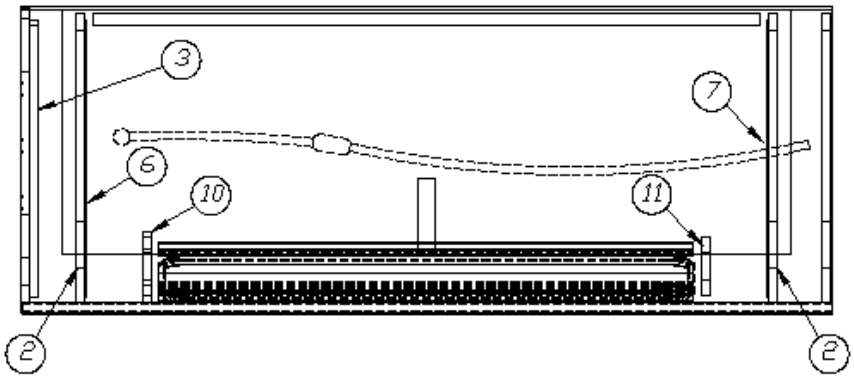

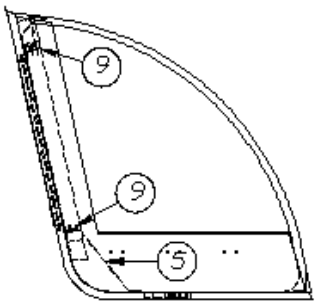

	966947	Galley Roof Locker
1.	801542-13	Galley locker face
2.	801545-05	Divider, Partial
3.	801545-01	Divider, Full
4.	802073	End cap
5.	115226	Bracket, Formed, Locker center support
6.	801539-01	Divider, LH
7.	801539-02	Divider, RH
8.	115375	Formed extrusion, End cap
9.	203388	Sliding door track
10.	966947-16	Panel, 1 x 12.5
11.	966947-17	Panel, 1 x 12.5
	203749-01	Door, 17.5"
	201673	Reverse cove molding, White
	203445	T-molding, .5625", Black
	115227-03	Angle, Formed, 41.25”
	104821	Roof locker support

2018 INTERNATIONAL
FURNITURE, GALLEY

Roof Locker, Galley, 23CB Serenity

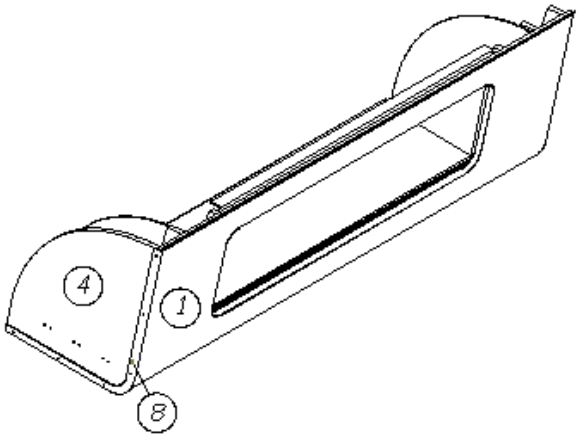

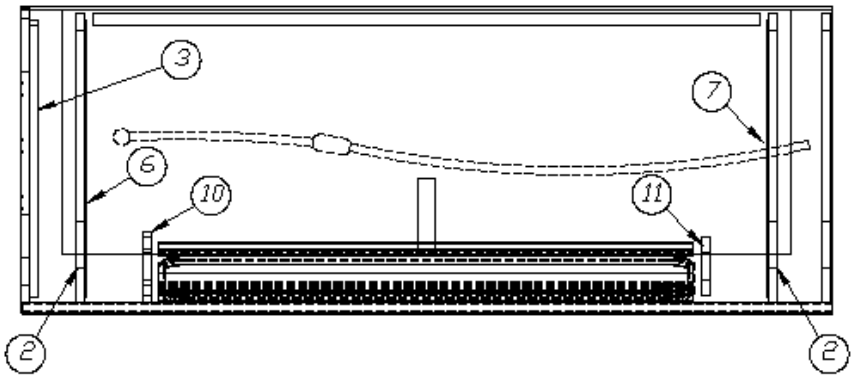

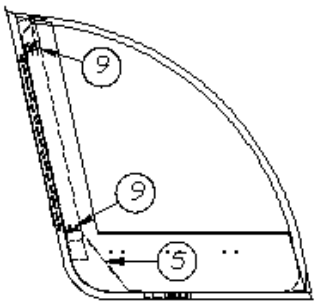

	967554-15	Galley Roof Locker
1.	801847	Galley locker face
2.	801545-05	Divider, Partial
3.	801545-01	Divider, Full
4.	802073-15	End cap
5.	115226	Bracket, Formed, Locker center support
6.	801539-01	Divider, LH
7.	801539-02	Divider, RH
8.	115375	Formed extrusion, End cap
9.	203388	Sliding door track
10.	967554-16	Panel, 1 x 12.5
11.	967554-17	Panel, 1 x 12.5
	203677-01	Door, 11.31 x 17.5
	201673	Reverse cove molding, White
	114812	Aluminum angle, 1 x 1
	104821	Roof locker support
	382114	Knob, Brushed Satin Nickel

2018 INTERNATIONAL
FURNITURE, GALLEY

Roof Locker, Galley, 23FB Signature

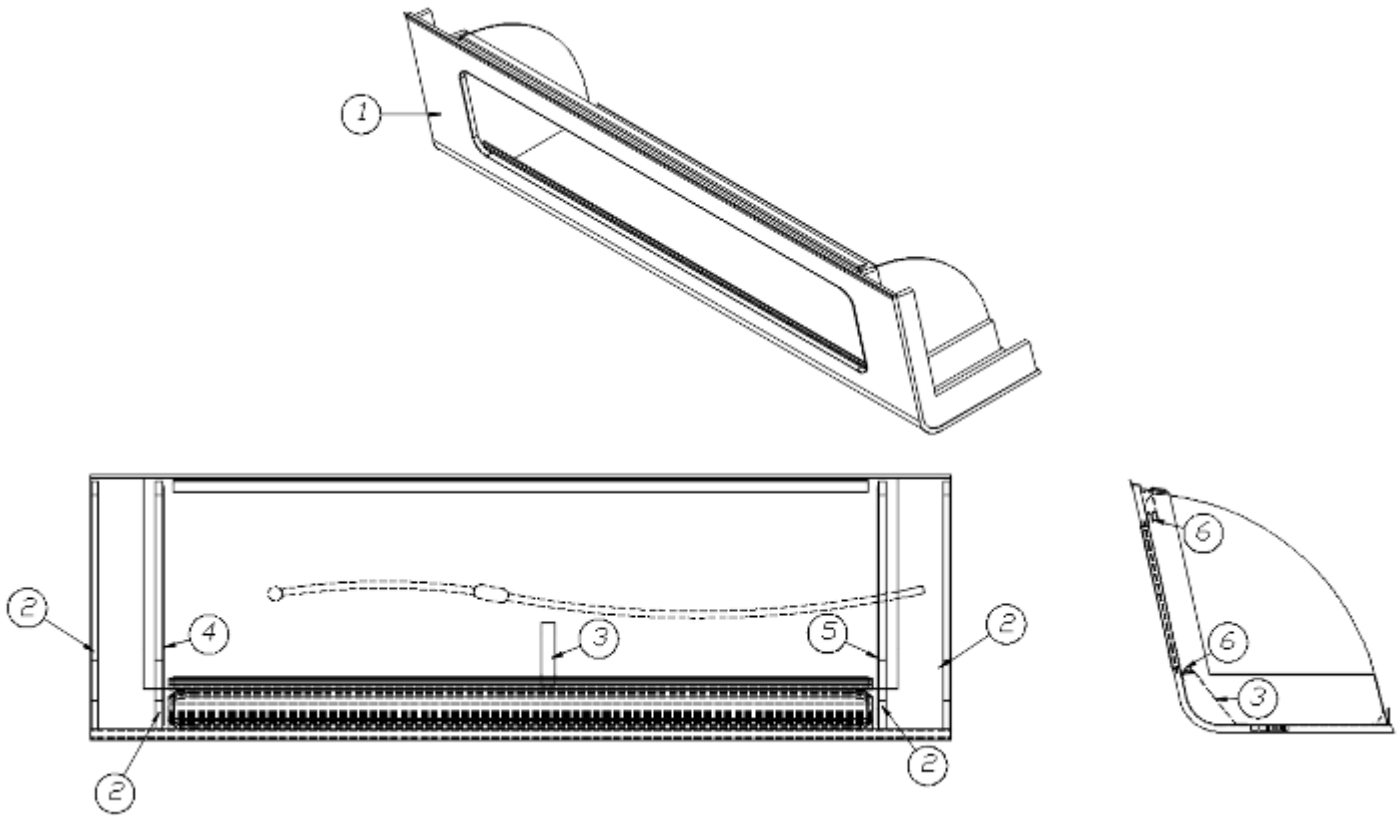

	967642	Galley Roof Locker
1.	801884	Galley locker face
2.	801884-02	Divider, Partial
3.	115226	Bracket, Formed, Locker center support
4.	801539-01	Divider, LH
5.	801539-02	Divider, RH
6.	203388	Sliding door track
	203749-09	Door, 11.31 x 26.25
	201673	Reverse cove molding, White
	703991	Pile seal weather strip
	203445	T-molding, .5625", Black
	114812	Aluminum angle, 1 x 1
	104821	Roof locker support

2018 INTERNATIONAL
FURNITURE, GALLEY

Roof Locker, Galley, 23FB Serenity

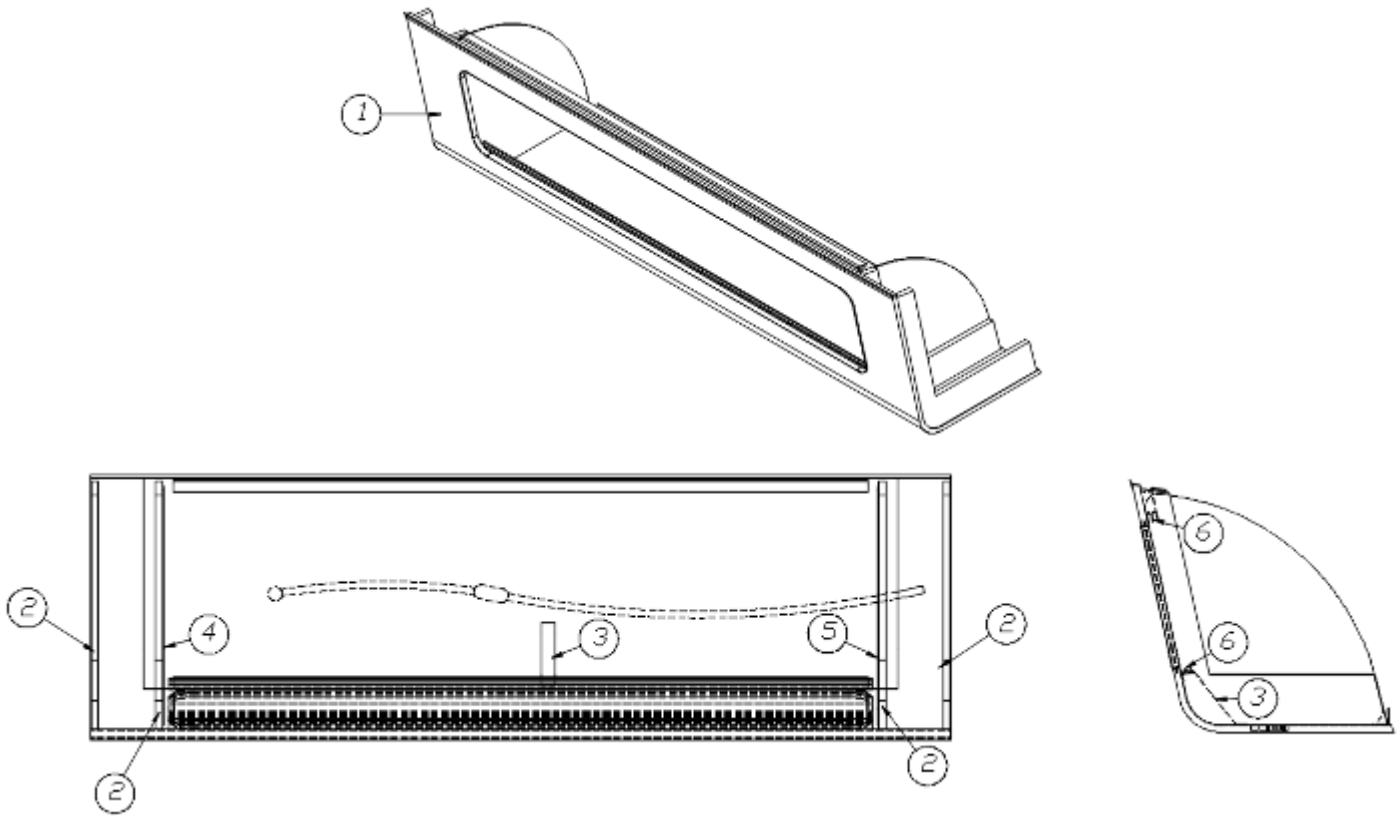

	967643	Galley Roof Locker
1.	801885	Galley locker face
2.	801885-02	Divider, Partial
3.	115226	Bracket, Formed, Locker center support
4.	801539-01	Divider, LH
5.	801539-02	Divider, RH
6.	203388	Sliding door track
	203677-02	Door, 11.31 x 26.25
	201673	Reverse cove molding, White
	114812	Aluminum angle, 1 x 1
	104821	Roof locker support
	703991	Pile seal weather strip
	203445	T-molding, .5625", Black
	382114	Knob, Brush Satin Nickel

2018 INTERNATIONAL
FURNITURE, GALLEY

Roof Locker, Dinette, 23FB A2GO, 23FB Signature

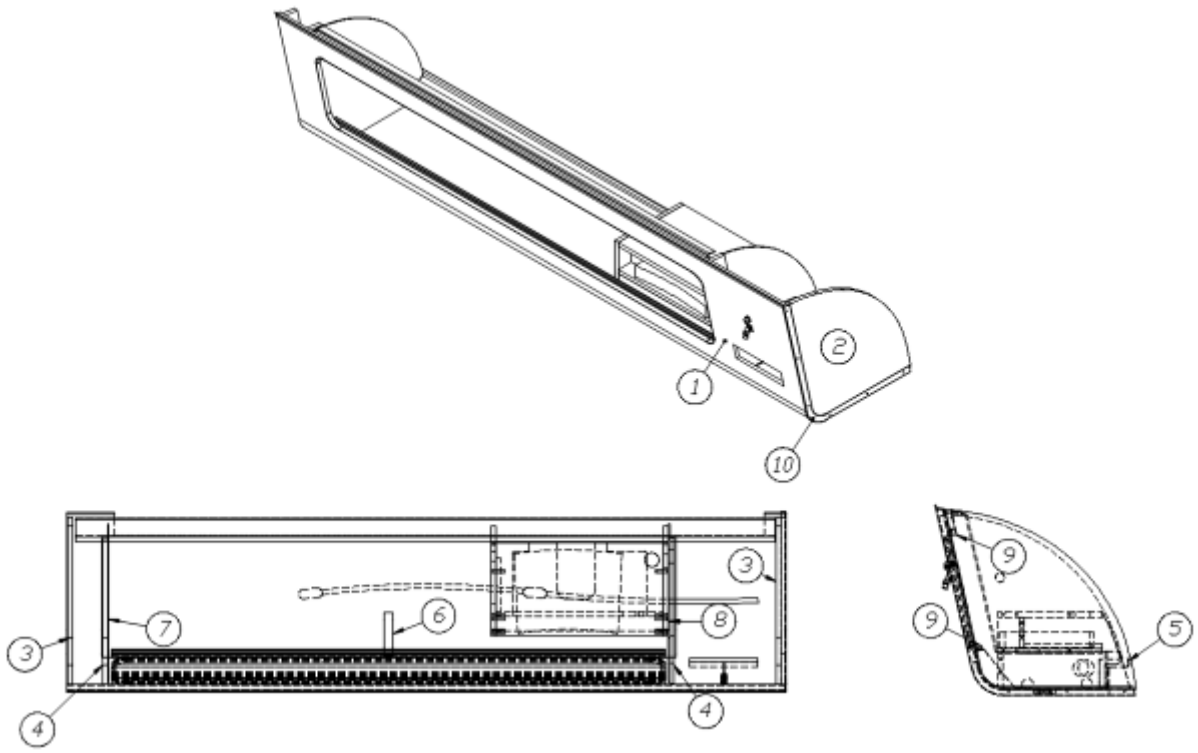

	967635	Dinette Roof Locker
	967635-01	Dinette Roof Locker, A2GO
1.	801882	Locker face
2.	967635-3	Panel, 17.15 x 18.21
3.	801882-03	Divider, Partial
4.	801882-02	Divider, Partial, Short
5.	115228-04	Blind closeout, Formed
6.	115226	Bracket, Formed, Locker center support
7.	801540-01	Divider, LH
8.	801540-05	Divider, RH
	801540-06	Divider, RH dinette, A2GO
9.	203388	Sliding door track
10.	115375	Formed extrusion, End cap
	203749-08	Door, 11.31 x 30
	104821	Roof locker support
	201673	Reverse cove molding, White
	115227-01	Angle, Formed
	703991	Pile seal weather strip
	115064	Aluminum counter top trim
	512577	Bushing, Strain relief, Black
	968345	Blu-Ray shelf
	968122	Blu-Ray shelf, A2GO

2018 INTERNATIONAL
FURNITURE, GALLEY

Roof Locker, Dinette, 23FB Serenity

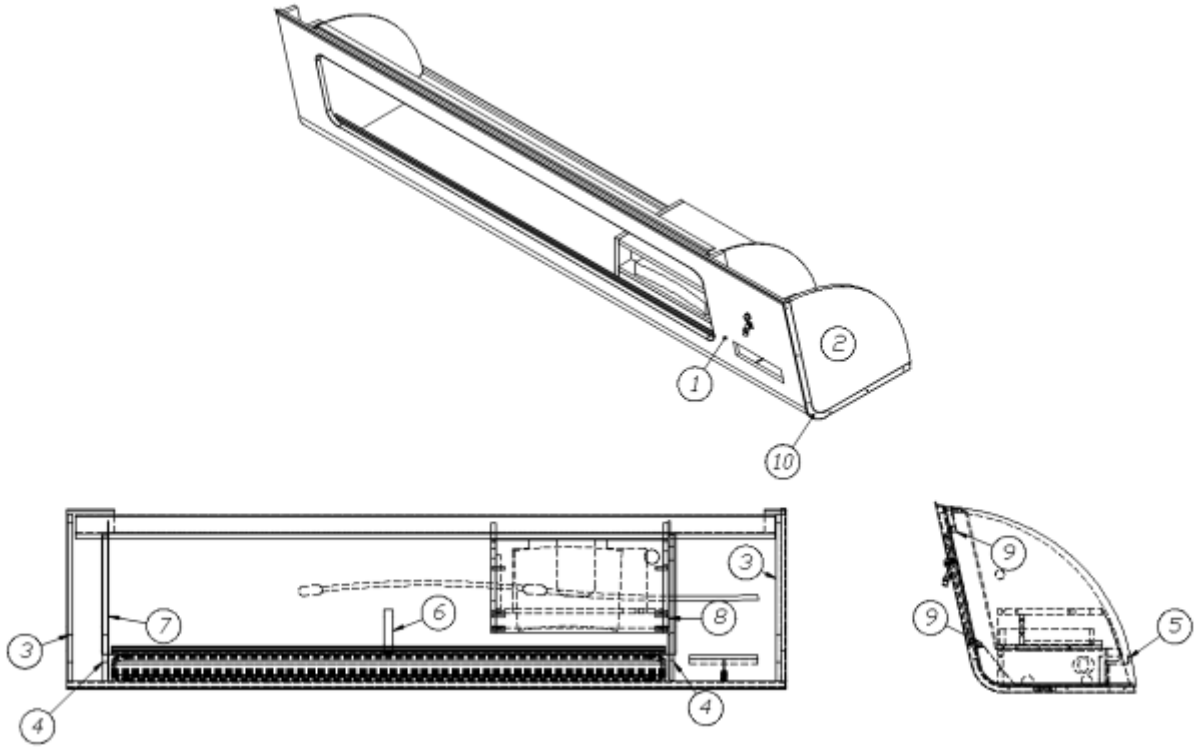

	967636	Dinette Roof Locker
1.	801883	Locker face
2.	967636-3	Panel, 17.15 x 18.21
3.	801883-03	Divider, Partial
4.	801883-02	Divider, Partial, Short
5.	115228-04	Blind closeout, Formed
6.	115226	Bracket, Formed, Locker center support
7.	801540-01	Divider, LH
8.	801540-05	Divider, RH w/radio
9.	203388	Sliding door track
10.	115375	Formed extrusion, End cap
	203677-03	Door, 11.31 x 30
	201673	Reverse cove molding, White
	115227-01	Angle, Formed
	104821	Roof locker support
	703991	Pile seal weather strip
	382114	Knob, Brushed Satin Nickel
	115064	Aluminum counter top trim
	512577	Bushing, Strain relief, Black
	968345	Blu-Ray shelf

2018 INTERNATIONAL
FURNITURE, GALLEY

Roof Locker, Galley, 25’ Signature

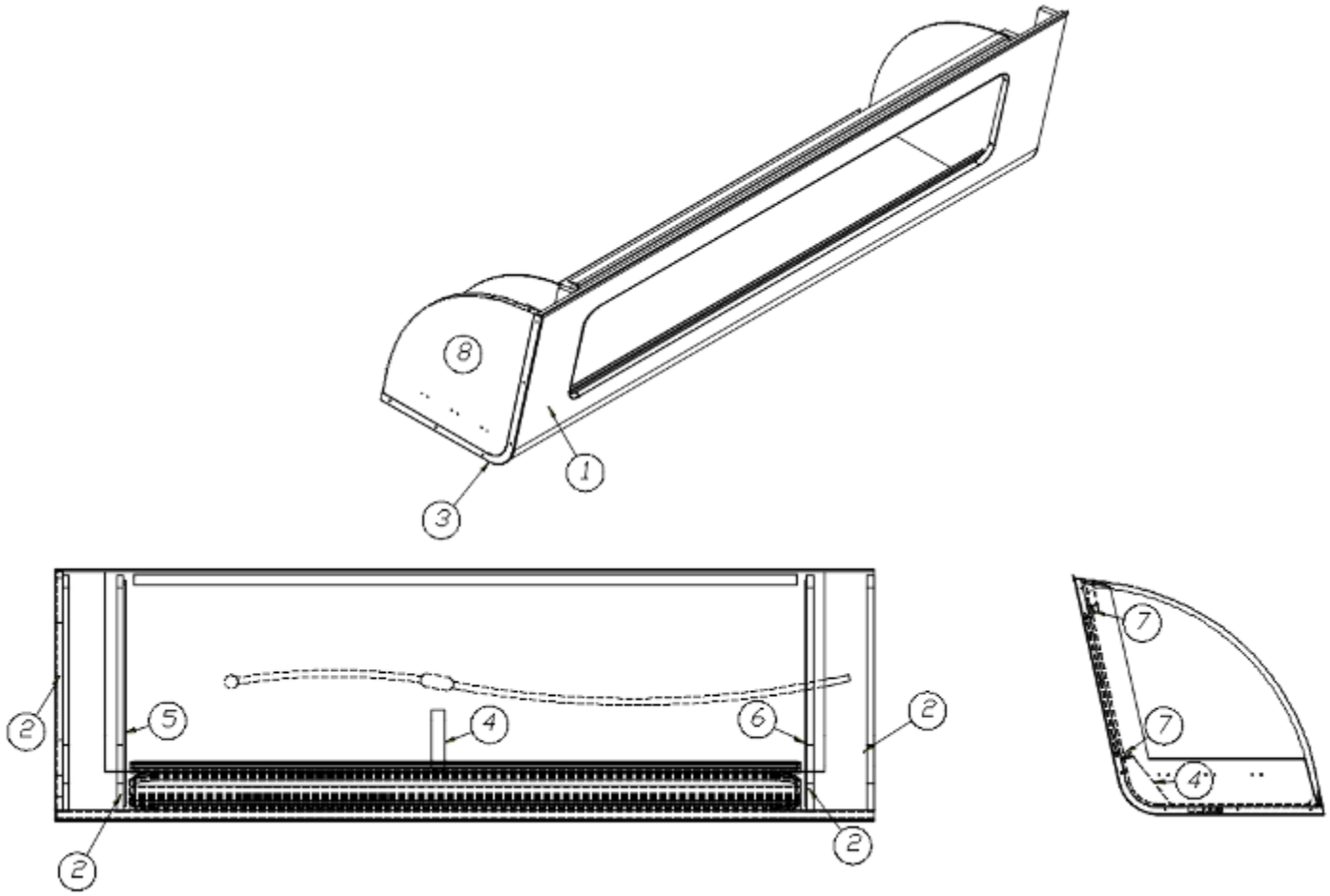

	967764	Galley Roof Locker
1.	801909	Locker face
2.	801909-02	Divider, Partial
3.	115375	Formed extrusion, End cap
4.	115226	Bracket, Formed, Locker center support
5.	801539-01	Divider, LH
6.	801539-02	Divider, RH
7.	203388	Sliding door track
8.	802073	End cap
	203749-09	Door, 11.31 x 26.25
	115227-02	Angle, Formed
	104821	Roof locker support
	203445	T-molding, Flexible Black poly
	201673	Reverse cove molding, White
	703991	Pile seal weather strip

2018 INTERNATIONAL
FURNITURE, GALLEY

Roof Locker, Galley, 25’ Serenity

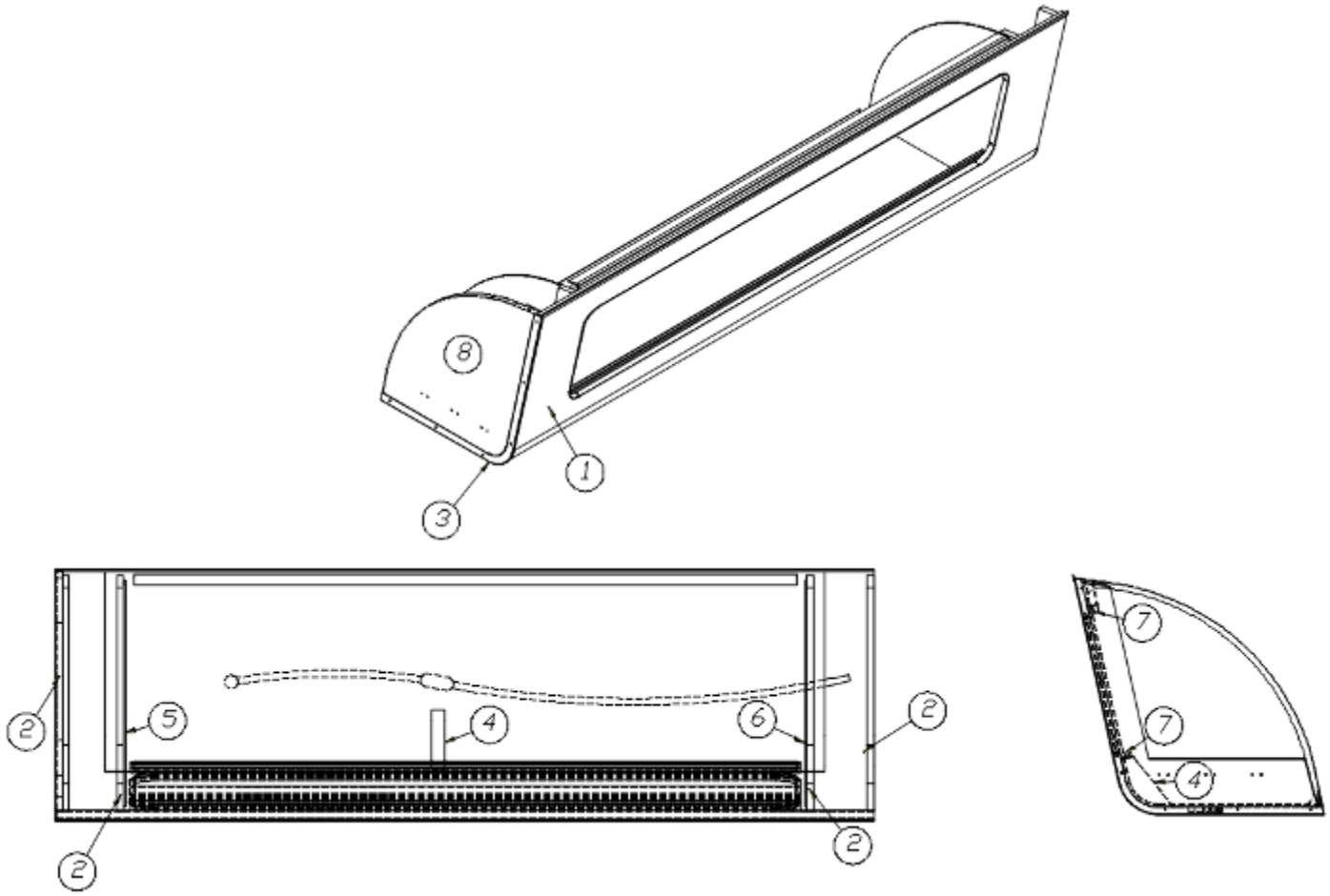

	967779-15	Galley Roof Locker
1.	801912-15	Locker face
2.	801912-02	Divider, Partial
3.	115375-01	Formed extrusion, End cap
4.	115226	Bracket, Formed, Locker CTR Support
5.	801539-01	Divider, LH
6.	801539-02	Divider, RH
7.	203388	Sliding door track
8.	802073-15	End cap
	203677-02	Door, 11.31 x 26.25
	201673	Reverse cove molding, White
	115483	Aluminum angle, .75" x .75"
	114812	Aluminum angle, 1 x 1
	104821	Roof locker support
	382114	Knob, Brushed Satin Nickel
	703991	Pile seal weather strip

2018 INTERNATIONAL
FURNITURE, GALLEY

Roof Locker, Galley, 25FB Signature

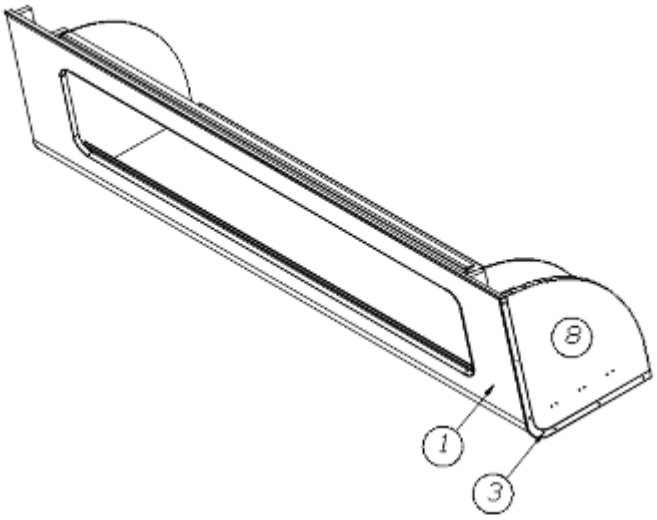

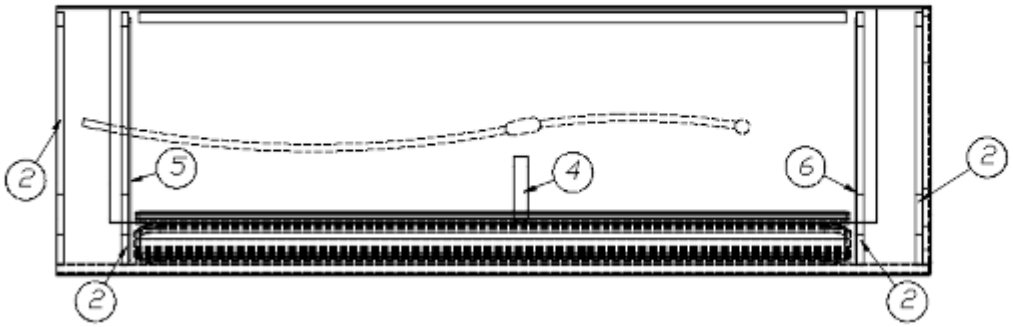

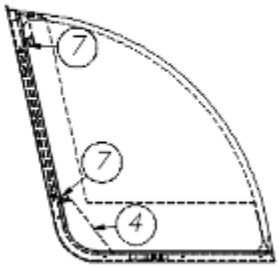

	966911	Galley Roof Locker
1.	801726	Locker face
2.	801545-02	Divider, Partial
3.	115375	Formed extrusion, End cap
4.	115226	Bracket, Formed, Locker center support
5.	801539-01	Divider, LH
6.	801539-02	Divider, RH
7.	203388	Sliding door track
8.	802073-01	End cap
	203749-09	Door, 11.31 x 26.25
	201673	Reverse cove molding, White
	703991	Pile seal weather strip
	115227-02	Angle, Formed
	104821	Roof locker support
	203445	T-molding, .5625", Black

2018 INTERNATIONAL
FURNITURE, GALLEY

Roof Locker, Galley, 25FB Serenity

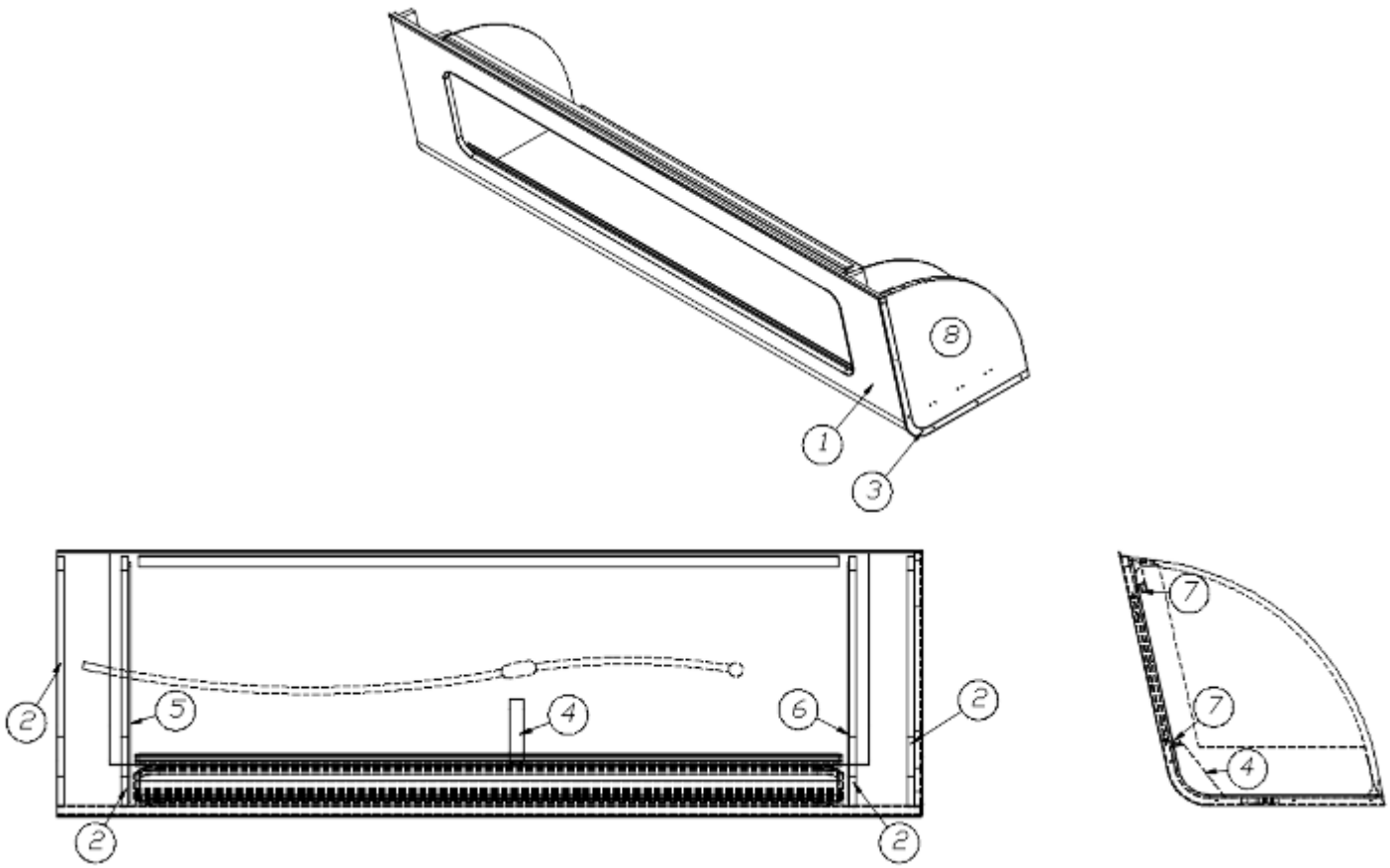

	967558-15	Galley Roof locker
1.	801851-01	Locker face
2.	801851-02	Divider, Partial
3.	115375	Formed extrusion, End cap
4.	115226	Bracket, Formed, Locker center support
5.	801539-01	Divider, LH
6.	801539-02	Divider, RH
7.	203388	Sliding door track
8.	802073-1501	End cap
	203677-02	Door, 11.31 x 26.25
	201673	Reverse cove molding, White
	114812	Aluminum angle, 1 x 1
	104821	Roof locker support
	382114	Knob, Brushed Satin Nickel
	115483	Aluminum angle, .75" x .75"
	703991	Pile seal weather strip

2018 INTERNATIONAL
FURNITURE, GALLEY

Roof Locker, Galley, 27FB Signature

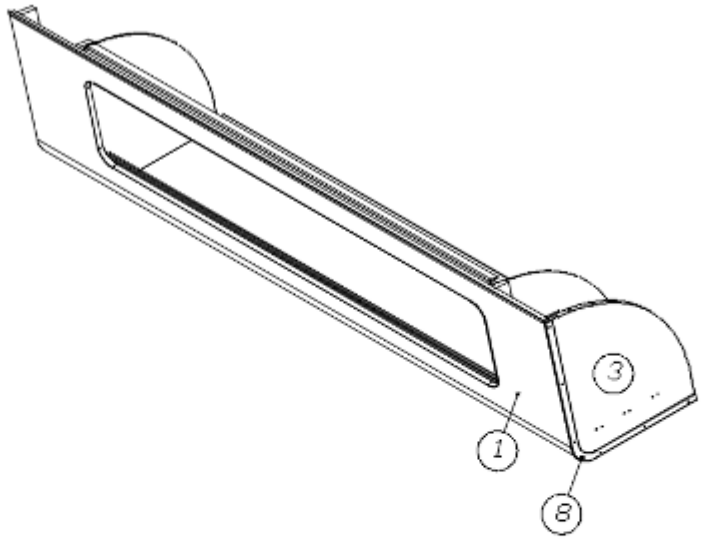

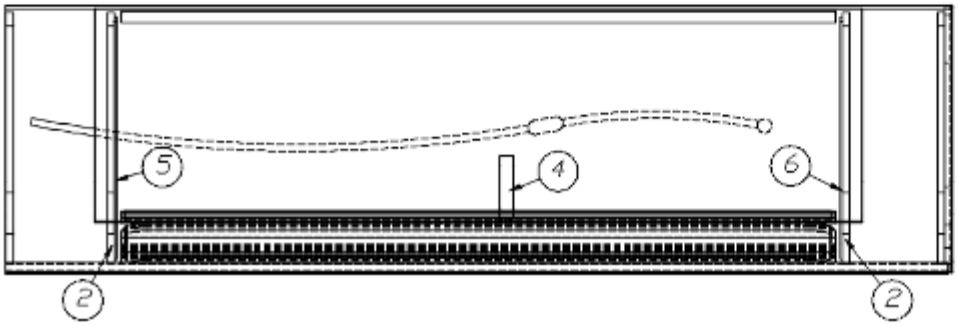

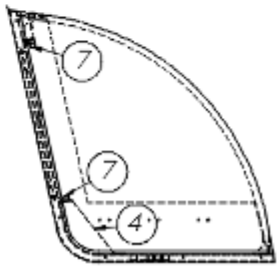

	966854	Galley Roof Locker
1.	801542-12	Locker face
2.	801545-02	Divider, Partial
3.	802073-01	End cap
4.	115226	Bracket, Formed, Locker center support
5.	801539-01	Divider, LH
6.	801539-02	Divider, RH
7.	203388	Sliding door track
8.	115375	Formed extrusion, End cap
	203749-09	Door, 11.31 x 26
	201673	Reverse cove molding, White
	115227-02	Angle, Formed
	104821	Roof locker support
	203445	T-molding, .5625", Black
	703991	Pile seal weather strip

2018 INTERNATIONAL
FURNITURE, GALLEY

Roof Locker, Galley, 27FB Serenity

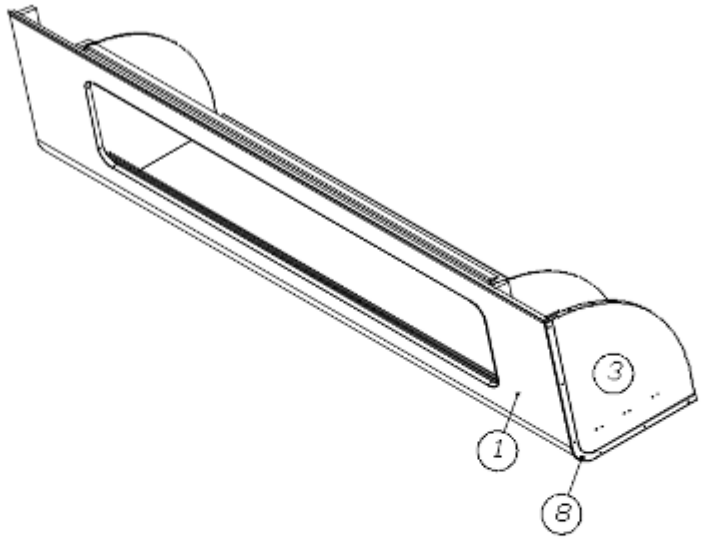

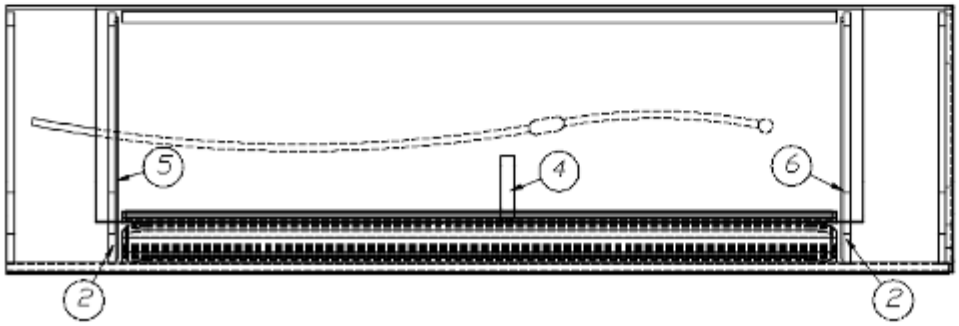

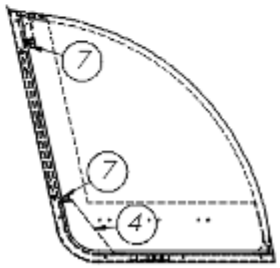

	967559-15	Galley Roof Locker
1.	801852-01	Locker face
2.	801852-02	Divider, Partial
3.	802073-1501	End cap
4.	115226	Bracket, Formed, Locker center support
5.	801539-01	Divider, LH
6.	801539-02	Divider, RH
7.	203388	Sliding door track
8.	115375	Formed extrusion, End cap
	203677-02	Door, 11.31 x 26.25
	201673	Reverse cove molding, White
	114812	Aluminum angle, 1 x 1
	104821	Roof locker support
	703991	Pile seal weather strip

2018 INTERNATIONAL
FURNITURE, GALLEY

Roof Locker, Galley, 28’ Signature

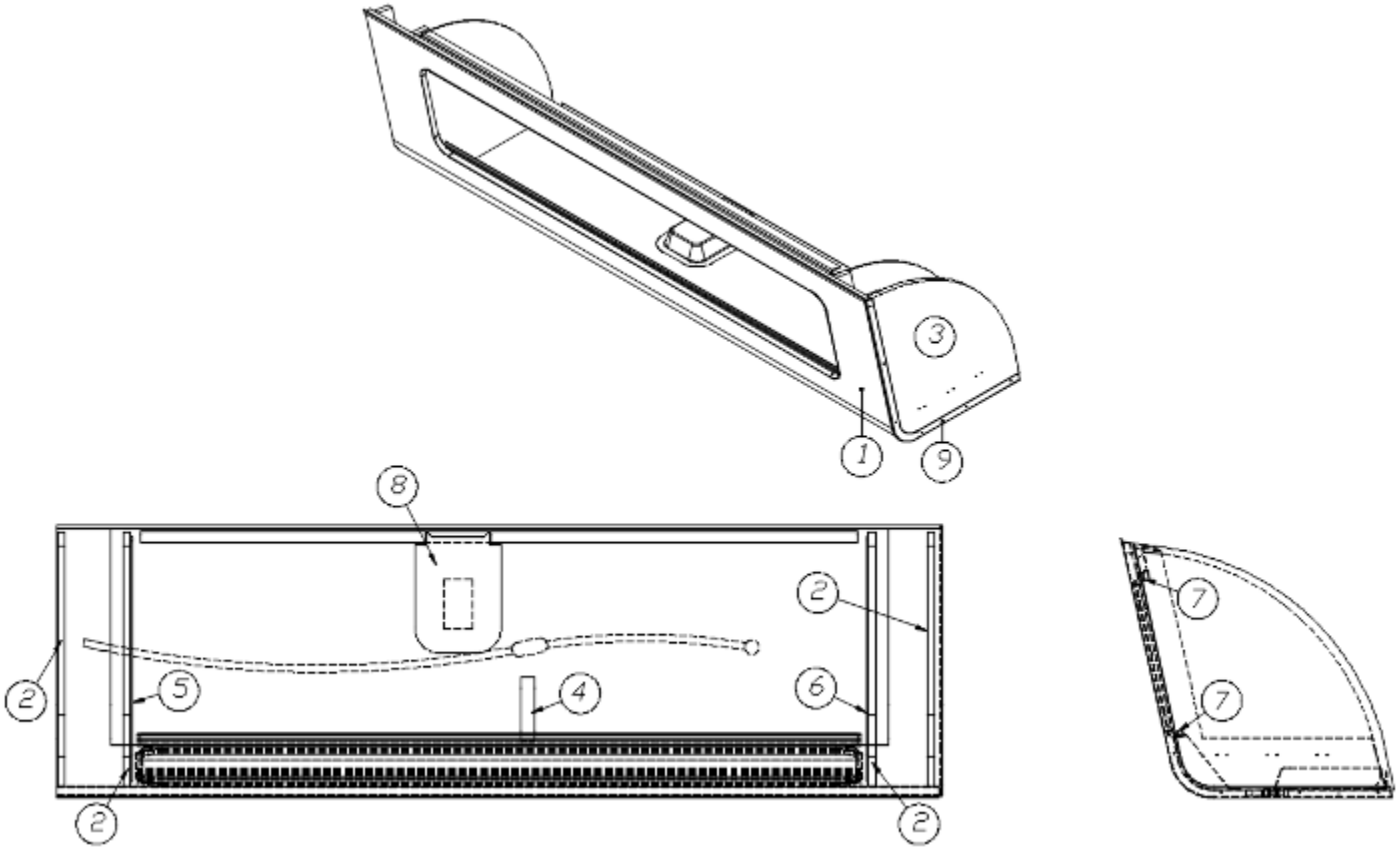

	966968	Galley Roof Locker
1.	801542-03	Locker face
2.	801545-02	Divider Partial
3.	802073-01	End cap
4.	115226	Bracket, Formed, Locker center support
5.	801539-01	Divider, LH
6.	801539-02	Divider, RH
7.	203388	Sliding door track
8.	200772	Pan, Deadbolt
9.	115375	Formed extrusion, End cap
	203749-09	Door, 11.31 x 26
	115227-02	Angle, Formed
	104821	Roof locker support
	203445	T-molding, .5625", Black
	201673	Reverse cove molding, White
	703991	Pile seal weather strip

2018 INTERNATIONAL
FURNITURE, GALLEY

Roof Locker, Galley, 28’ Serenity

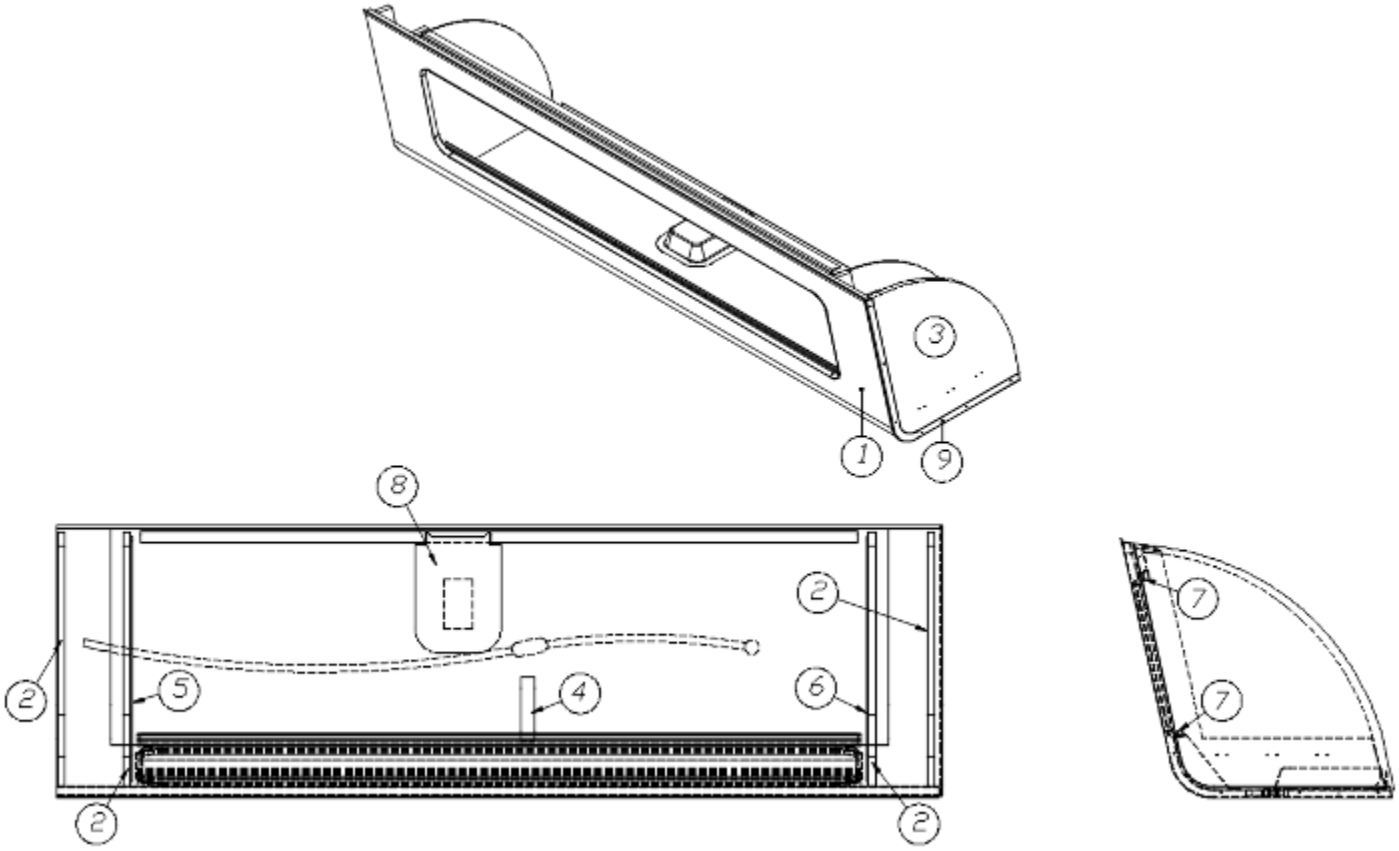

	967560-15	Galley Roof Locker
1.	801853-01	Locker face
2.	801853-02	Divider, Partial
3.	802073-1501	End cap
4.	115226	Bracket, Formed, Locker center support
5.	801539-01	Divider, LH
6.	801539-02	Divider, RH
7.	203388	Sliding door track
8.	200772	Pan, Deadbolt, Tri-Mark
9.	115375	Formed extrusion, End cap
	203677-02	Door, 11.31 x 26.25
	201673	Reverse cove molding, White
	115483	Aluminum angle, .75" x .75"
	114812	Aluminum angle, 1 x 1
	104821	Roof locker support
	382114	Knob, Brushed Satin Nickel
	703991	Pile seal weather strip

2018 INTERNATIONAL
FURNITURE, GALLEY

Roof Locker, Galley, 30’ Signature

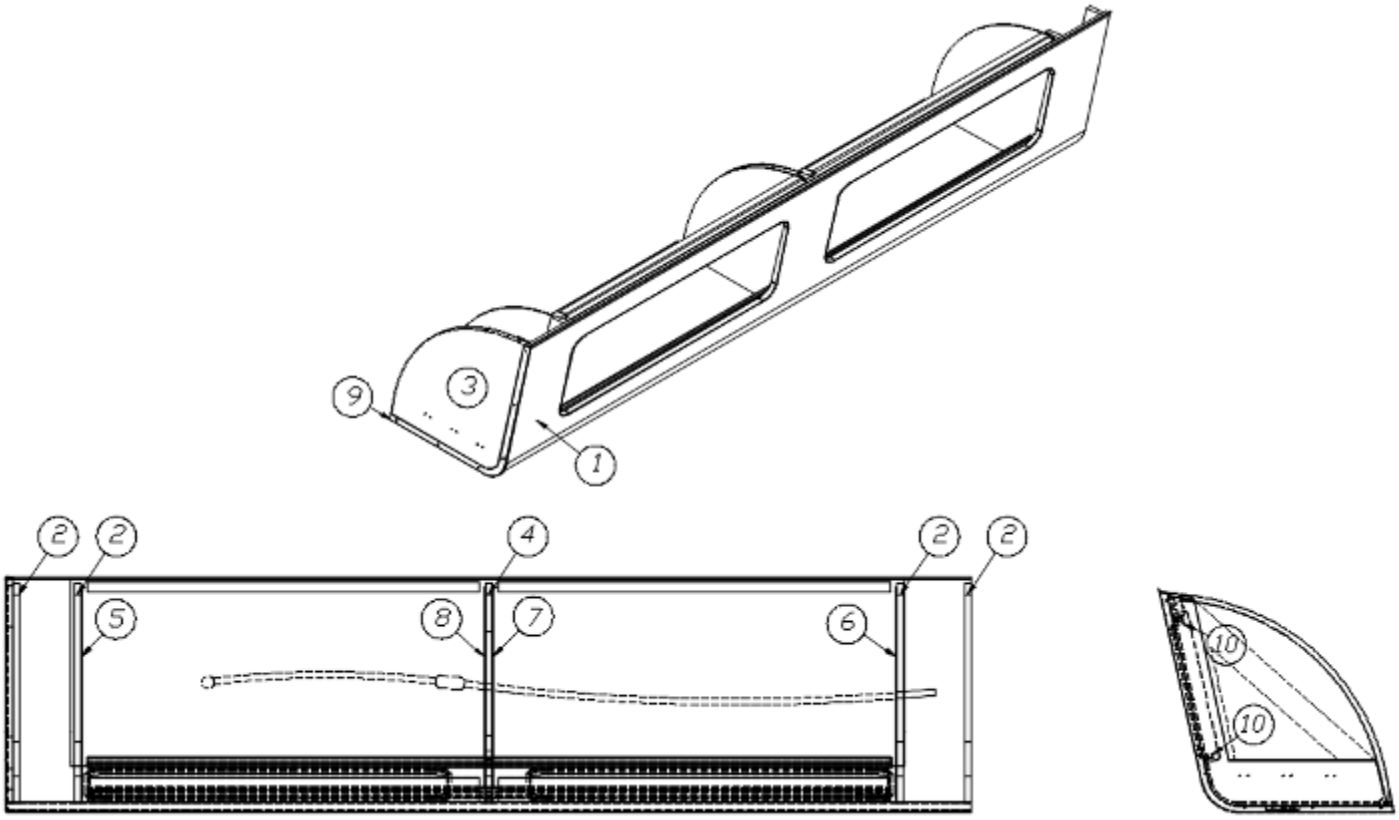

	967626	Galley Roof Locker
1.	801878	Locker face
2.	801878-02	Divider, Partial
3.	802073	End cap
4.	967626-5	Panel, 16.9 x 17.78
5.	801539-01	Divider, LH
6.	801539-02	Divider, RH
7.	801539-07	Divider, Center pass-thru, LH
8.	801539-08	Divider, Center pass-thru, RH
9.	115375-01	Formed extrusion, End cap
10.	203388	Sliding door track
	203749-08	Door, 11.31 x 30
	201673	Reverse cove molding, White
	115227-05	Angle, Formed
	104821	Roof locker support
	203445	T-molding, Flexible Black plastic
	703991	Pile seal weather strip

2018 INTERNATIONAL
FURNITURE, GALLEY

Roof Locker, Galley, 30’ Serenity

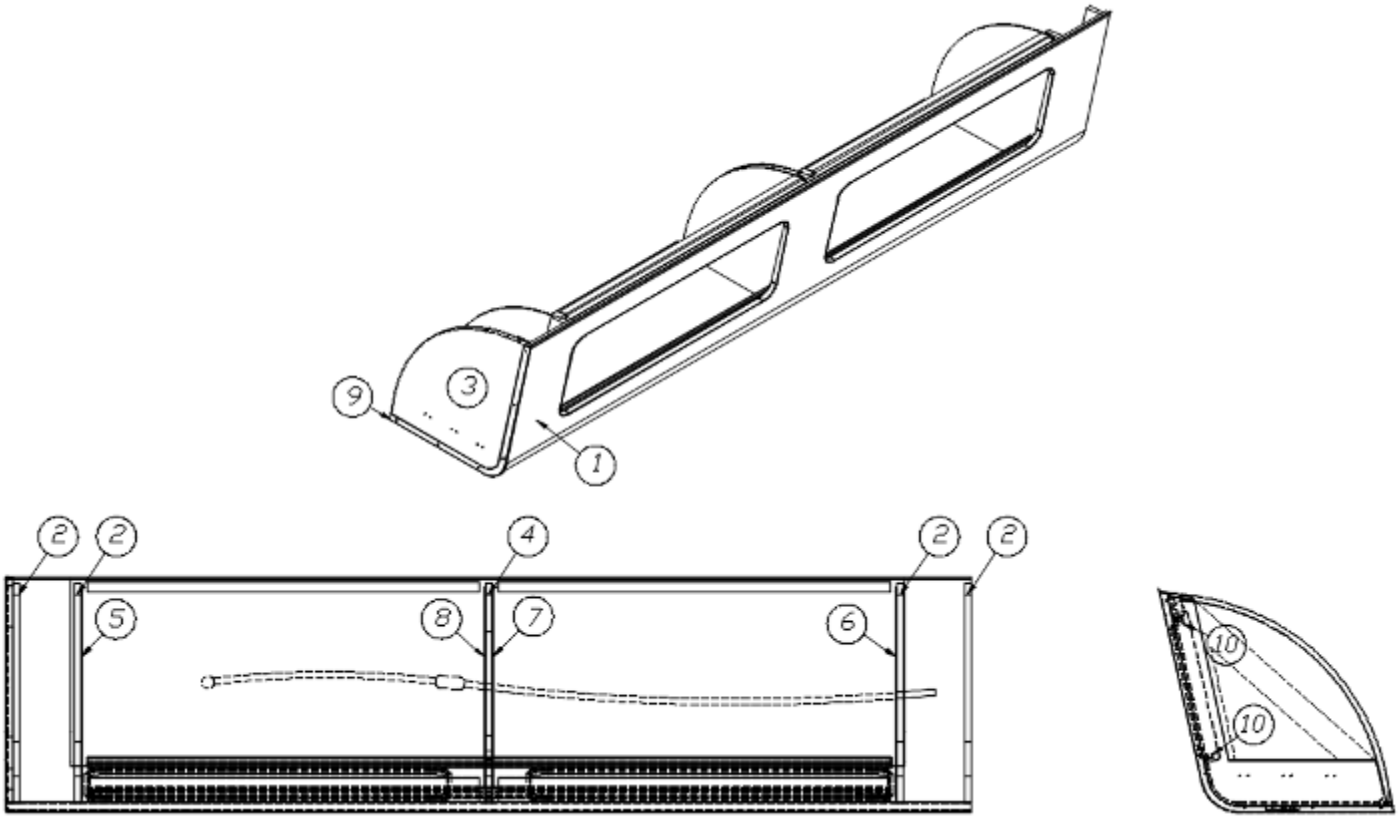

	967627	Galley Roof Locker
1.	801879	Locker face
2.	801879-02	Divider, Partial
3.	802073-15	End cap
4.	967627-5	Panel, 16.9 x 17.78
5.	801539-01	Divider, LH
6.	801539-02	Divider, RH
7.	801539-07	Divider, Center pass-thru, LH
8.	801539-08	Divider, Center pass-thru, RH
9.	115375-01	Formed extrusion, End cap
10.	203388	Sliding door track
	203677-03	Door, 11.31 x 30
	104821	Roof locker support
	115227-05	Angle, Formed
	201673	Reverse cove molding, White
	703991	Pile seal weather strip
	382114	Knob, Brushed Satin Nickel

2018 INTERNATIONAL
FURNITURE, GALLEY

Dinette Seats, 23FB Signature

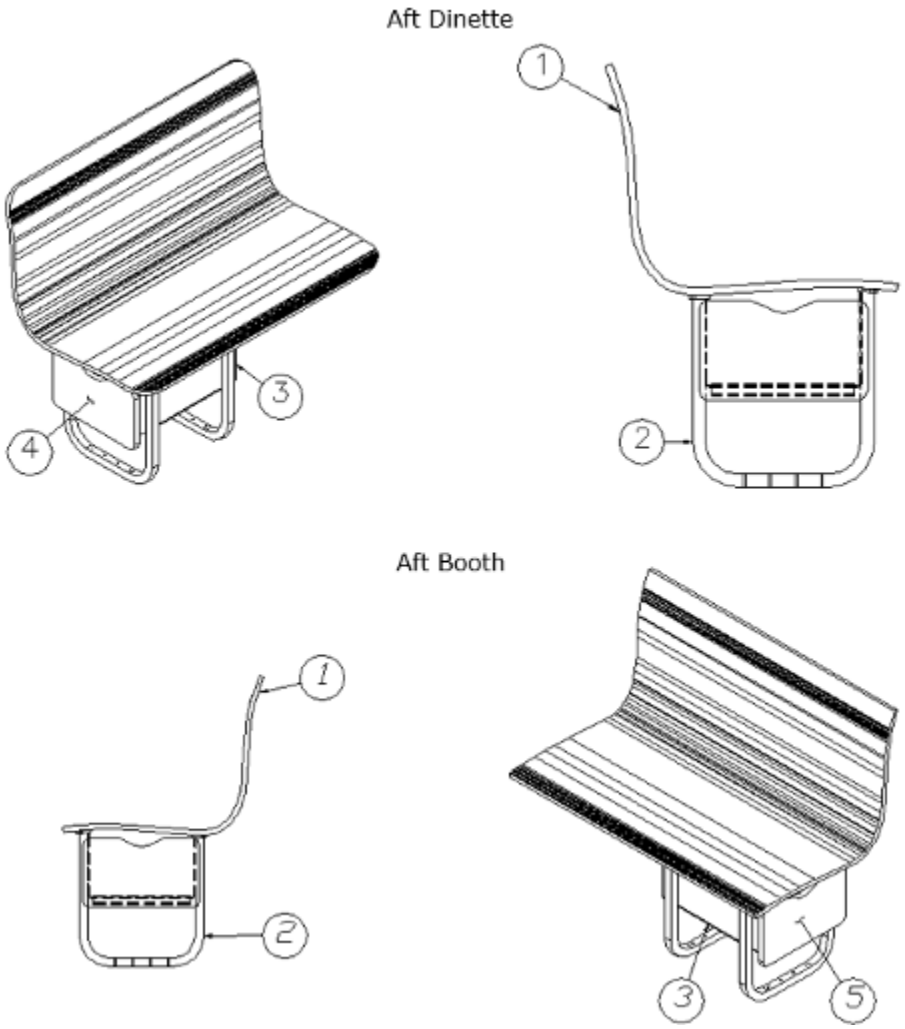

	967631	Aft Dinette Seat
	966987	Aft Booth
1.	801446	Dinette seat, Contoured
2.	115140	Leg, Dinette base
3.	115141-02	Closeout, Under booth seat
4.	967631-6	Door, 13.06 x 7.75, Aft dinette seat
5.	966987-6	Door, 13.06 x 7.75, Aft booth seat
	203439	Storage box, 17" x 11.13" x 6.38"
	381847-01	Piano hinge
	381228-02	Catch, Grabber door (5lb Pull)
	114070	Extrusion, J-trim
	114812	Aluminum angle, 1 x 1
	967638	Wheel well cover
	967639	Wire cover

2018 INTERNATIONAL
FURNITURE, GALLEY

Dinette Seats, 23FB Serenity

Aft Dinette

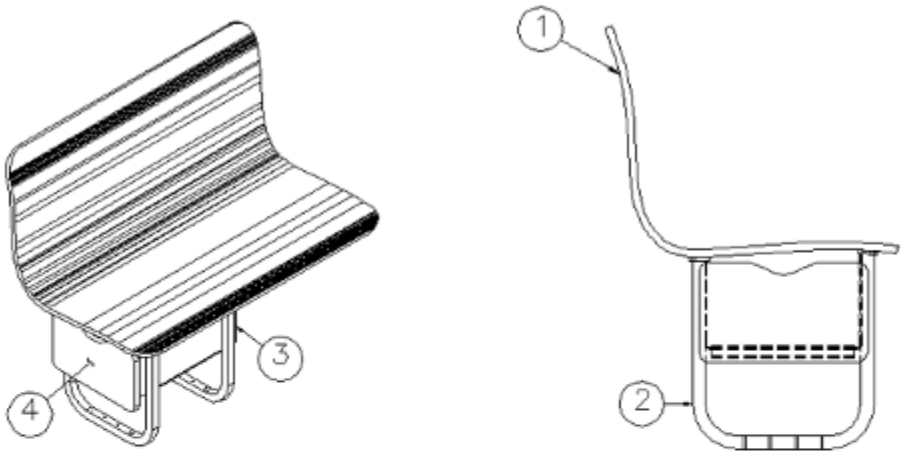

Aft Booth

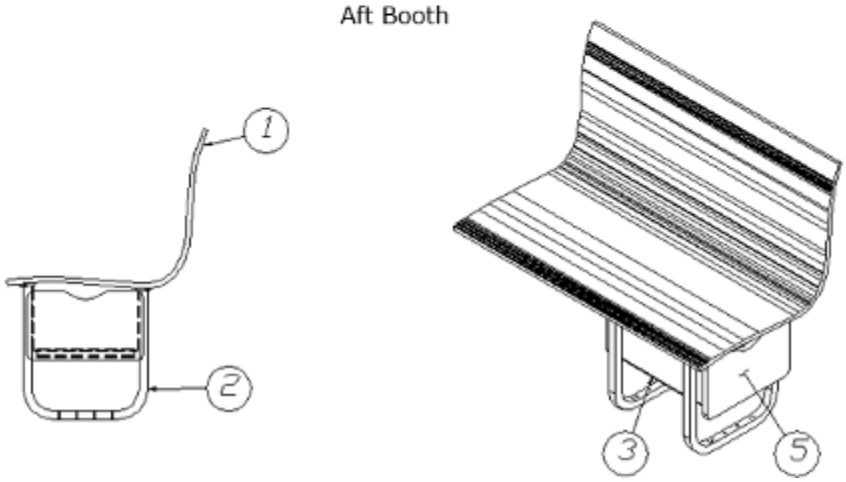

	967631-15	Aft Dinette Seat
	966987-15	Aft Booth
1.	801446	Dinette seat, Contoured
2.	115140	Leg, Dinette base
3.	115141-02	Closeout, Under booth seat, 15.5”
4.	967631-156	Door, 13.06 x 7.75, Aft dinette seat
5.	966987-156	Door, 13.06 x 7.75, Aft booth seat
	203439	Storage box, 17" x 11.13" x 6.38"
	381847-01	Piano hinge
	381228-02	Catch, Grabber door (5lb Pull)
	114070	Extrusion, J-trim
	114812	Aluminum angle, 1 x 1
	967638	Wheel well cover
	967639-15	Wire cover

2018 INTERNATIONAL
FURNITURE, GALLEY

Dinette Seat, Center, 23FB

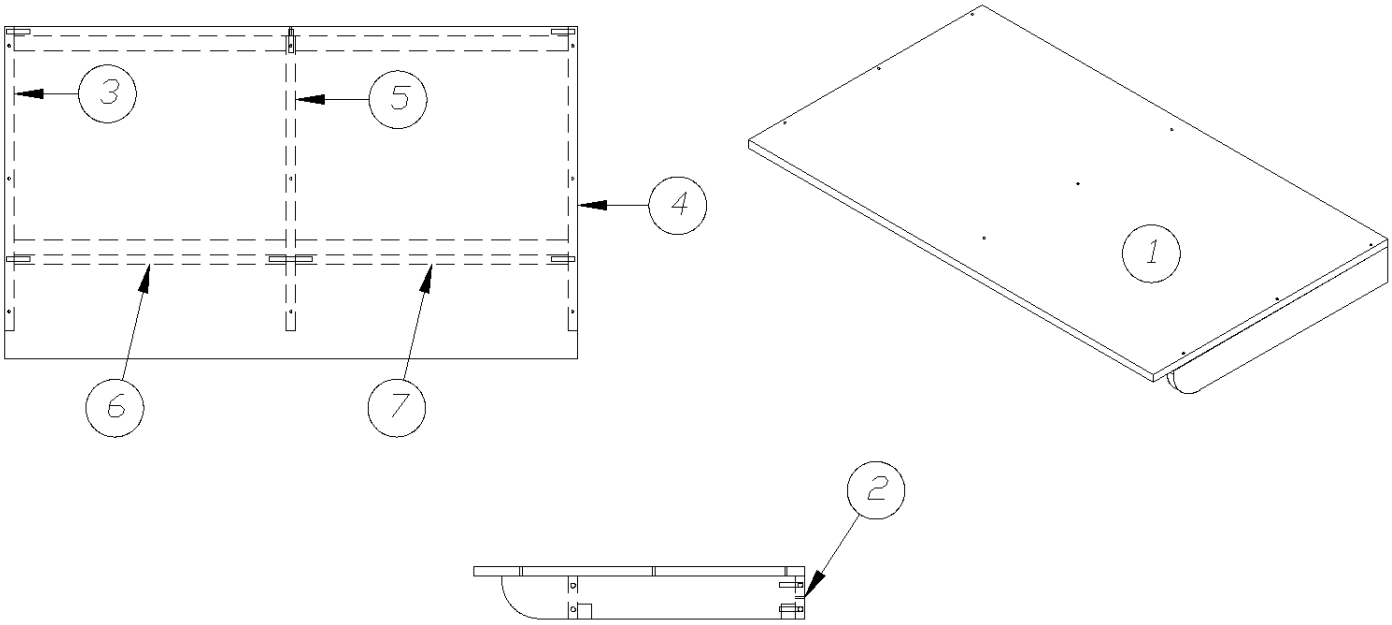

968012	Center Seat, Signature
968012-15	Center Seat, Serenity

1.	968012-1	Panel, 30.25 x 17.5
2.	968012-2	Panel, 2.25 x 29.25
3.	968012-3	Panel, 2.25 x 16
4.	968012-4	Panel, 2.25 x 16
5.	968012-5	Panel, 2.25 x 16
6.	968012-8	Panel, 2.25 x 14.38
7.	968012-9	Panel, 2.25 x 14.38

2018 INTERNATIONAL
FURNITURE, GALLEY

Dinette Seats, 28’ Signature

Forward Booth

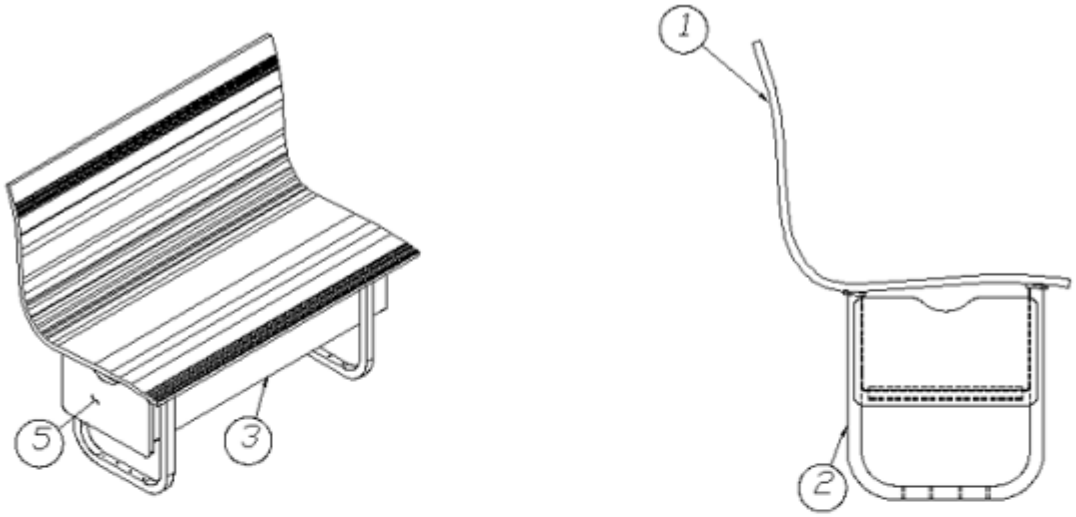

Aft Booth

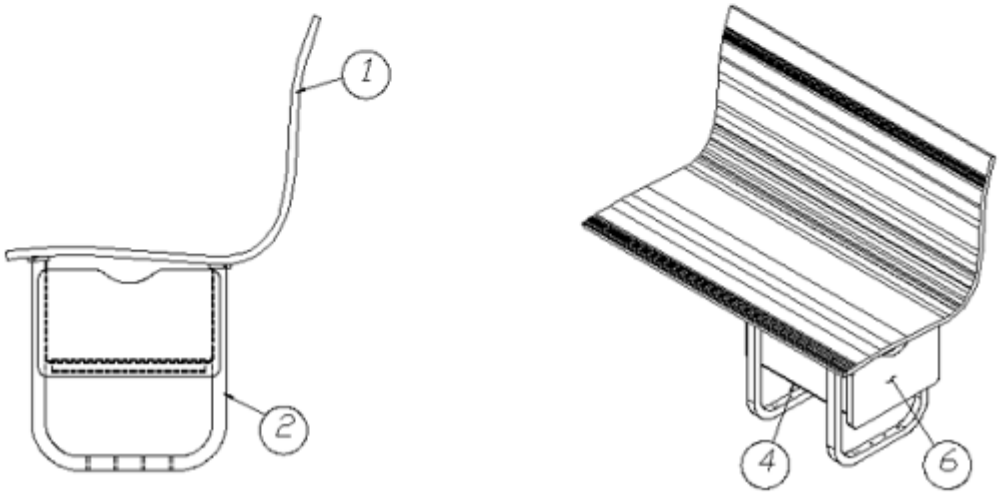

	966986	Forward Booth
	966987	Aft Booth
1.	801446	Dinette seat, Contoured
2.	115140	Leg, Dinette base
3.	115141	Closeout, Under booth seat
4.	115141-02	Closeout, Under booth seat
5.	966986-7	Door, 13.07 x 7.75, Forward booth seat
6.	966987-6	Door, 13.07 x 7.75, Aft booth seat
	381847-01	Piano hinge
	381228-02	Catch, Grabber door (5lb Pull)
	114070	Extrusion, J-trim
	114812	Aluminum angle, 1 x 1

2018 INTERNATIONAL
FURNITURE, GALLEY

Dinette Seats, 28’ Serenity

Forward Booth

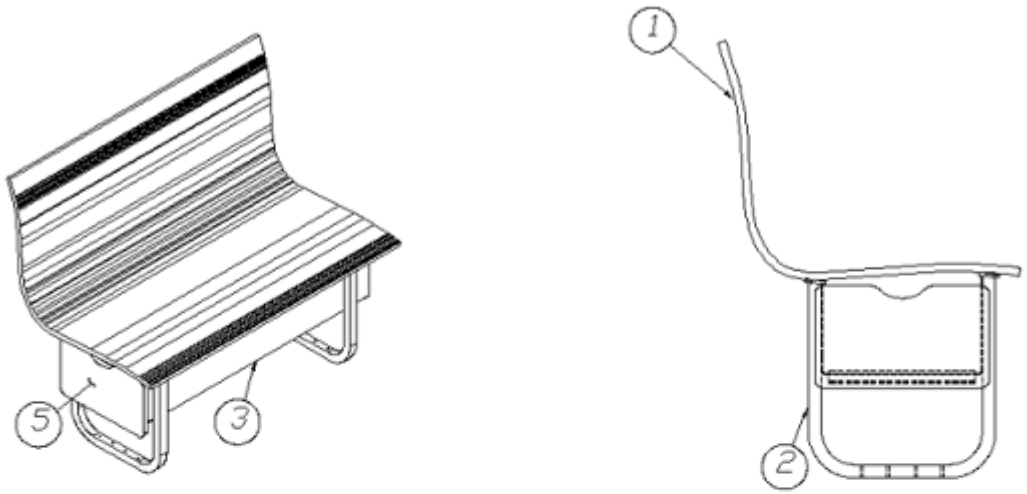

Aft Booth

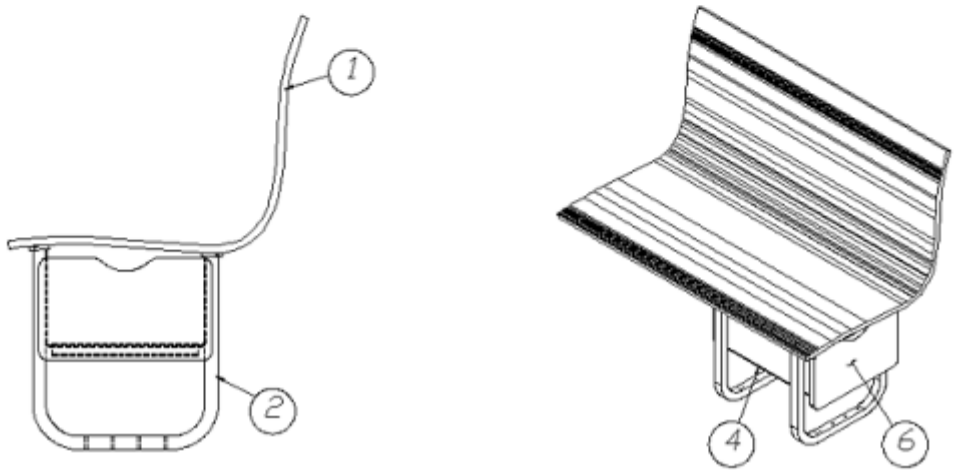

	966986-15	Forward Booth
	966987-15	Aft Booth
1.	801446	Dinette seat, Contoured
2.	115140	Leg, Dinette base
3.	115141	Closeout, Under booth seat
4.	115141-02	Closeout, Under booth seat
5.	966986-157	Door, 13.07 x 7.75, Forward booth seat
6.	966987-156	Door, 13.07 x 7.75, Aft booth seat
	381847-01	Piano hinge
	203439	Storage box, 17" x 11.13" x 6.38"
	381228-02	Catch, Grabber door (5lb Pull)
	114070	Extrusion, J-trim
	114812	Aluminum angle, 1 x 1

2018 INTERNATIONAL
FURNITURE, GALLEY

Dinette Seats, 30’ Signature

Aft Dinette Seat

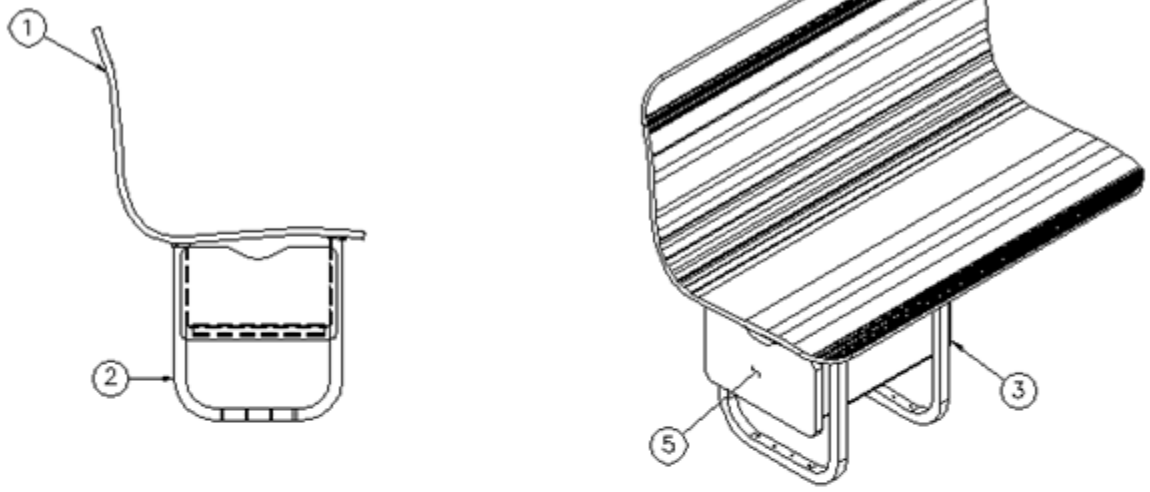

Forward Dinette Seat

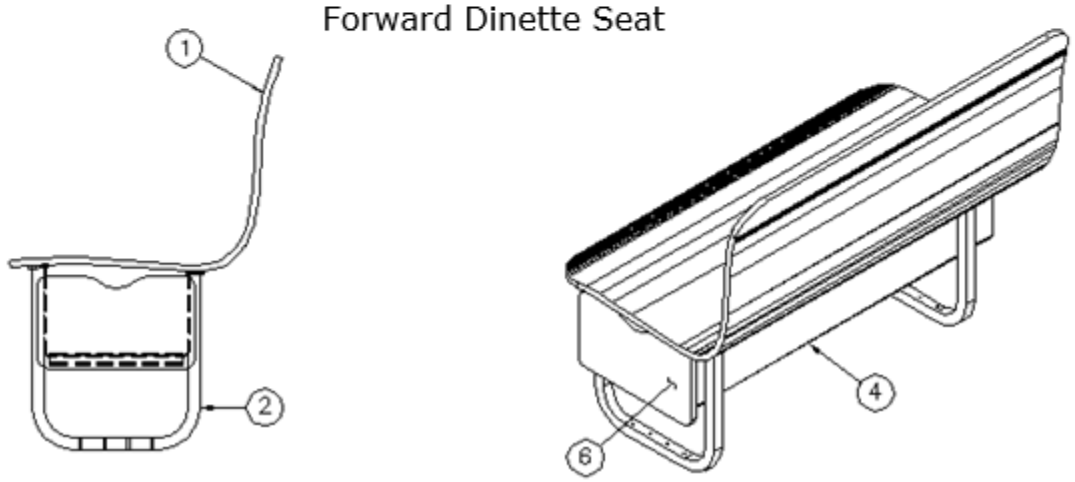

	967631	Aft Dinette Seat
	967632	Forward Dinette Seat
1.	801446	Dinette seat, Contoured
2.	115140	Leg, Dinette base
3.	115141-02	Closeout, Under booth seat
4.	115141	Closeout, Under booth seat
5.	967631-6	Door, 13.06 x 7.75, Aft dinette seat
6.	967632-6	Door, 13.06 x 7.75, Forward dinette seat
	203439	Storage box, 17” x 11.13” x 6.38”
	381847-01	Piano hinge
	381228-02	Catch, Grabber door (5lb Pull)

2018 INTERNATIONAL
FURNITURE, GALLEY

Dinette Seats, 30’ Serenity

Aft Dinette Seat

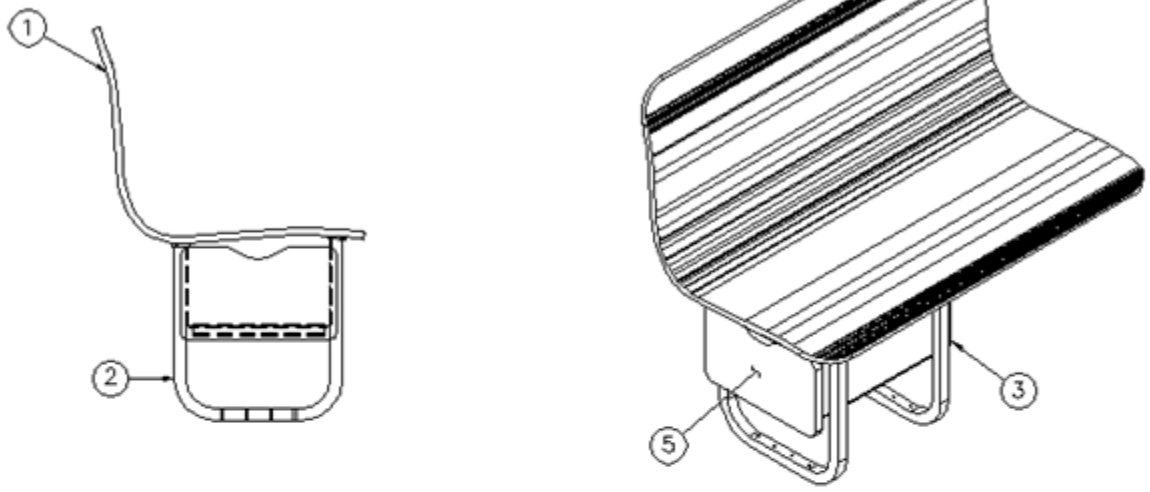

Forward Dinette Seat

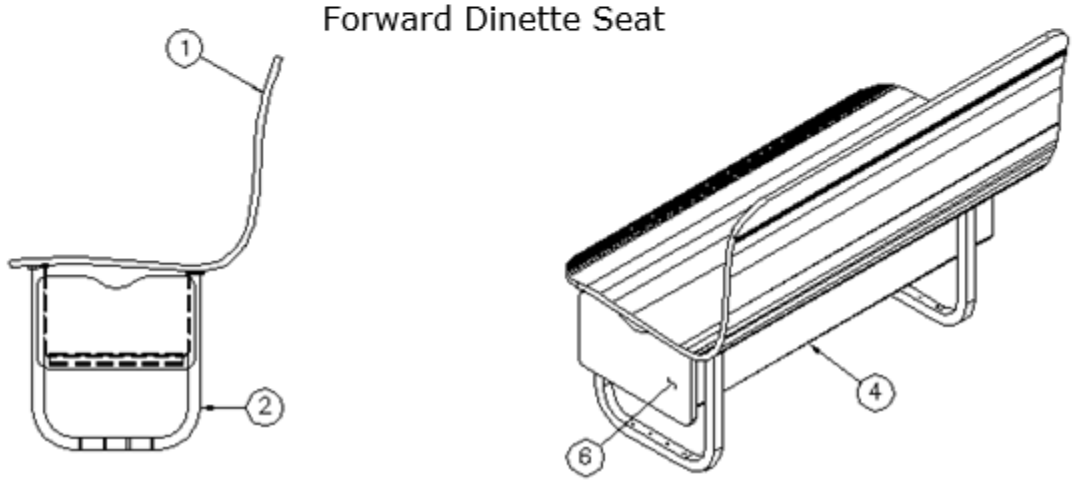

	967631-15	Aft Dinette Seat
	967632-15	Forward Dinette Seat
1.	801446	Dinette seat, Contoured
2.	115140	Leg, Dinette base
3.	115141-02	Closeout, Under booth seat
4.	115141	Closeout, Under booth seat
5.	967631-156	Door, 13.06 x 7.75, Aft dinette seat
6.	967632-156	Door, 13.06 x 7.75, Forward dinette seat
	203439	Storage box, 17” x 11.13” x 6.38”
	381847-01	Piano hinge
	381228-02	Catch, Grabber door (5lb Pull)

Dinette Table, Sliding Pedestal, 23FB

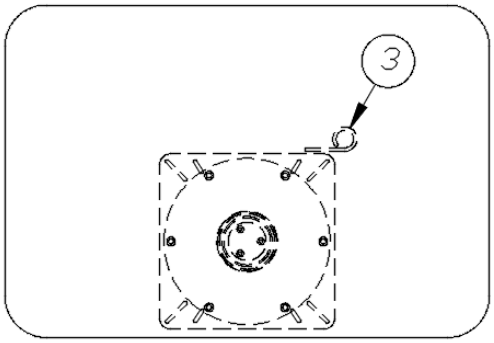

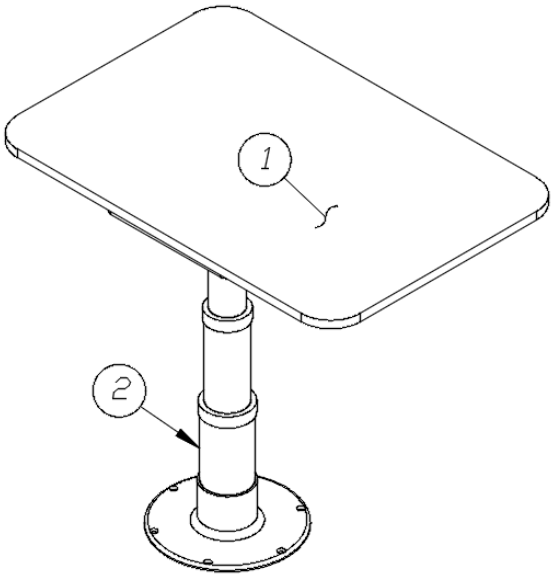

	967924	Sliding Pedestal Table, Signature
	967924-15	Sliding Pedestal Table, Serenity
1.	967924-1	Top, 24” x 35”, Signature
	967924-151	Top, 24” x 35”, Serenity
2.	382073-01	Bracket, Pedestal table
3.	381109-01	Latch w/flat U-strike
	381400-01	Drawer slide, 12”

2018 INTERNATIONAL
FURNITURE, GALLEY

Dinette Table, 28’ A2GO, 28’, 30’

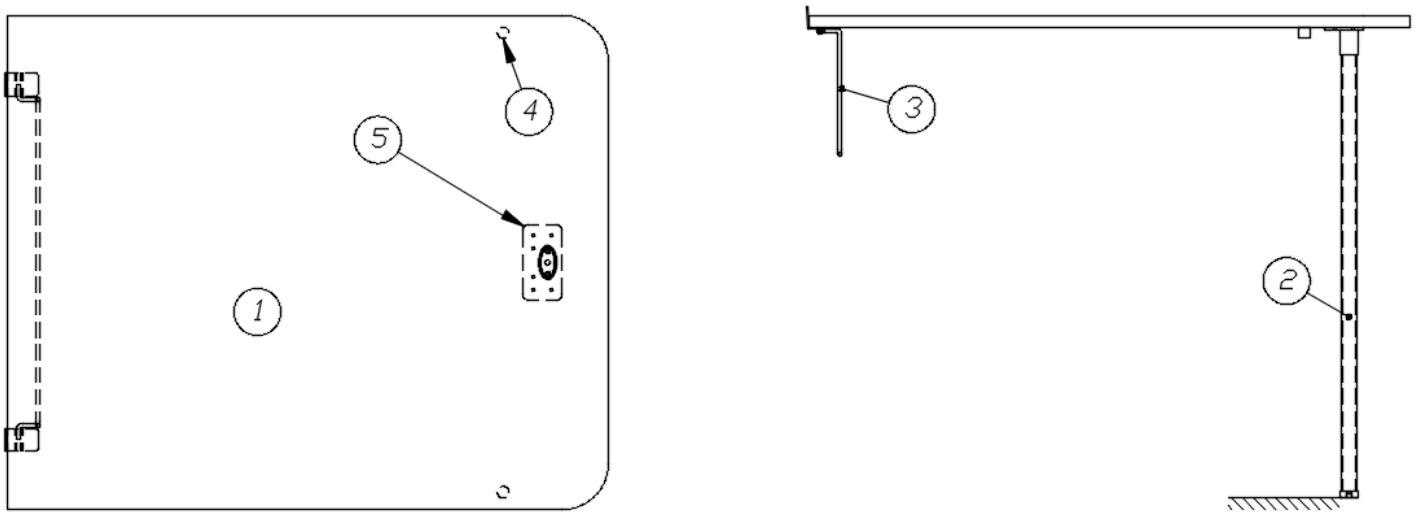

	967155	Dinette Table, Signature
	967155-15	Dinette Table, Serenity
	967155-23	Dinette Table, A2GO
1.	967155-1	Table top, Signature
	967155-151	Table top, Serenity
	967155-231	Table top, A2GO
2.	382177	Leg, Folding table
3.	380284-02	Bracket, Table hinge assembly kit
	380284-03	Table hinge brackets
4.	381136	Rubber bumper
5.	967155-8	Panel, 3.63 x 5.88

2018 INTERNATIONAL
FURNITURE, LOUNGE

Dinette Seat, Curbside, 23CB Signature

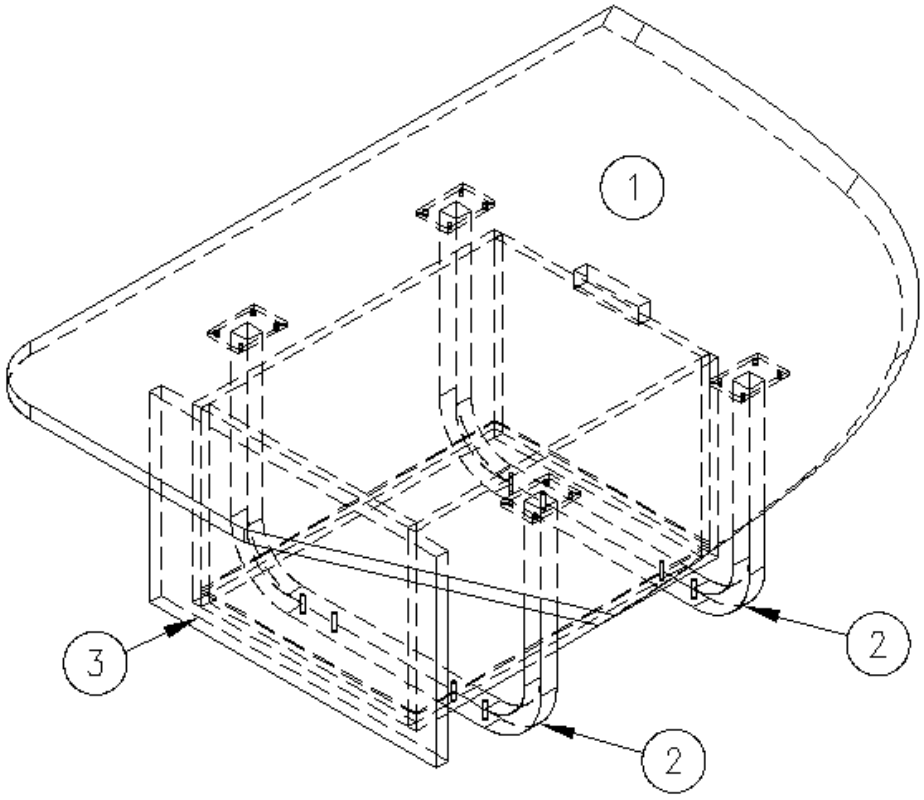

	966928	Curbside Dinette Seat
1.	966928-1	Panel, 33.38 x 40.18
2.	454177	Legs, Aluminum
3.	966928-4	Door, 11.5 x 18
	964909-11	Drawer box, 10 x 14 x 19
	381833-01	Drawer slide, 18"
	381074	Bull dog catch
	381775	Drawer pull

2018 INTERNATIONAL
FURNITURE, LOUNGE

Dinette Seat, Curbside, 23CB Serenity

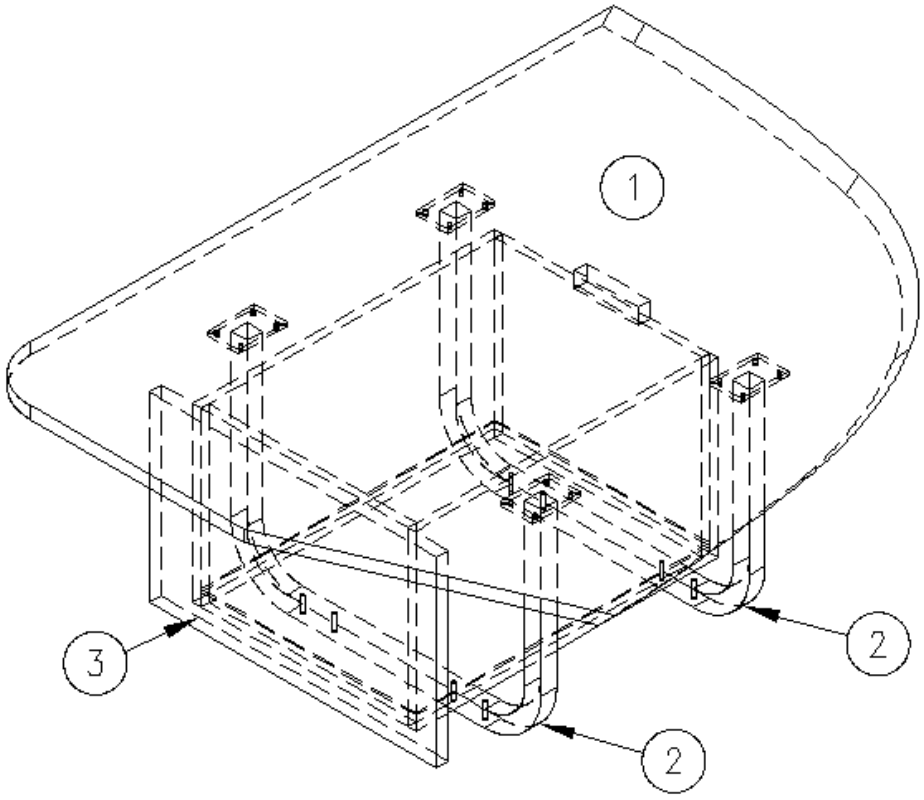

	966928-15	Curbside Dinette Seat
1.	966928-1	Panel, 33.38 x 40.18
2.	454177	Legs, Aluminum
3.	964909-11	Drawer box, 10 x 14 x 19
	966928-154	Door, 11.5 x 18
	381833-01	Drawer slide, 18"
	381074	Bull dog catch
	381775	Drawer pull

2018 INTERNATIONAL
FURNITURE, LOUNGE

Dinette Seat, Roadside, 23CB Signature

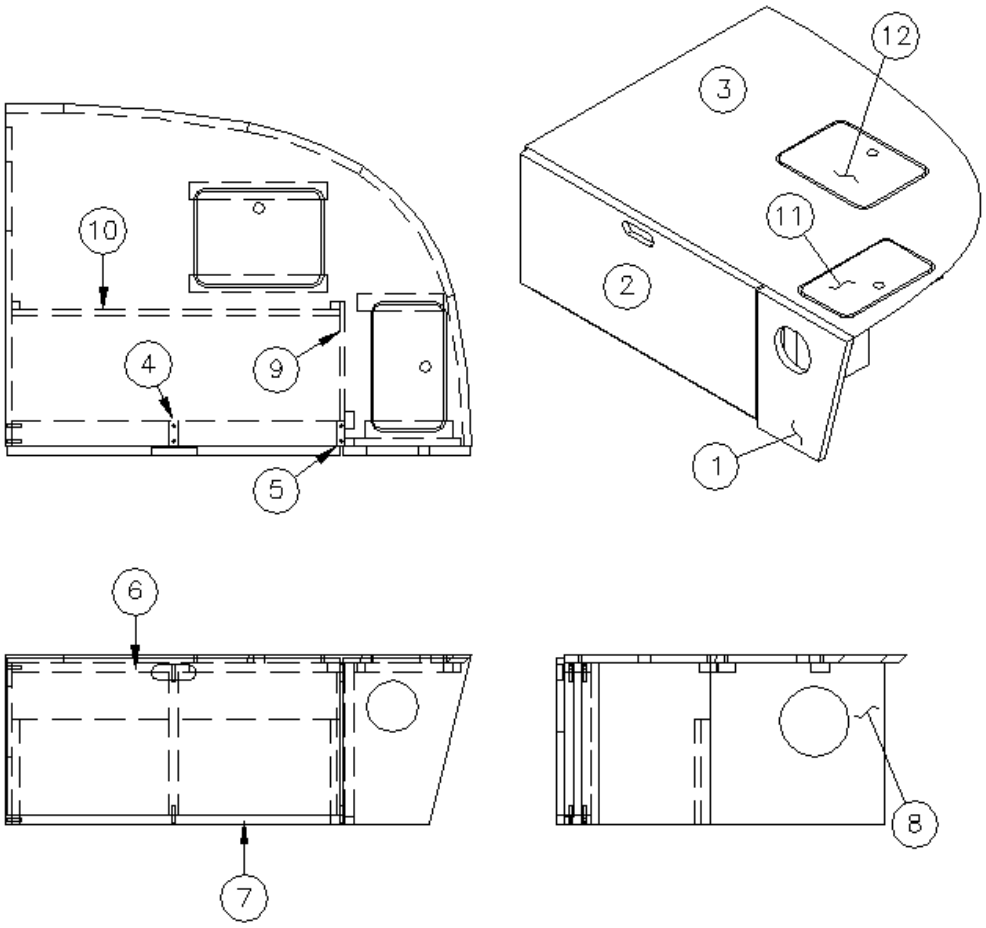

	966930	Roadside Dinette Seat
1.	966930-1	Panel, 14.38 x 10.88
2.	966930-2	Panel, 13.63 x 28.63
3.	966930-3	Panel, 29.5 x 40.19
4.	966930-4	Panel, 2.25 x 12.38
5.	966930-5	Panel, 2.25 x 12.38
6.	966930-6	Panel, 2.25 x 28.75
7.	966930-7	Panel, 2.25 x 28.75
8.	966930-8	Panel, 27.5 x 13.88
9.	966930-15I	Panel, 10.25 x 13.88
10.	966930-17	Panel, 9 x 28.25
11.	966930-18	Panel, 6 x 10.75
12.	966930-19	Panel, 8 x 10.75
	381072-01	Hinge 3" x 2", Fixed pin
	381775	Drawer pull
	381228-02	Catch, Grabber door (5lb Pull)

2018 INTERNATIONAL
FURNITURE, LOUNGE

Dinette Seat, Roadside, 23CB Serenity

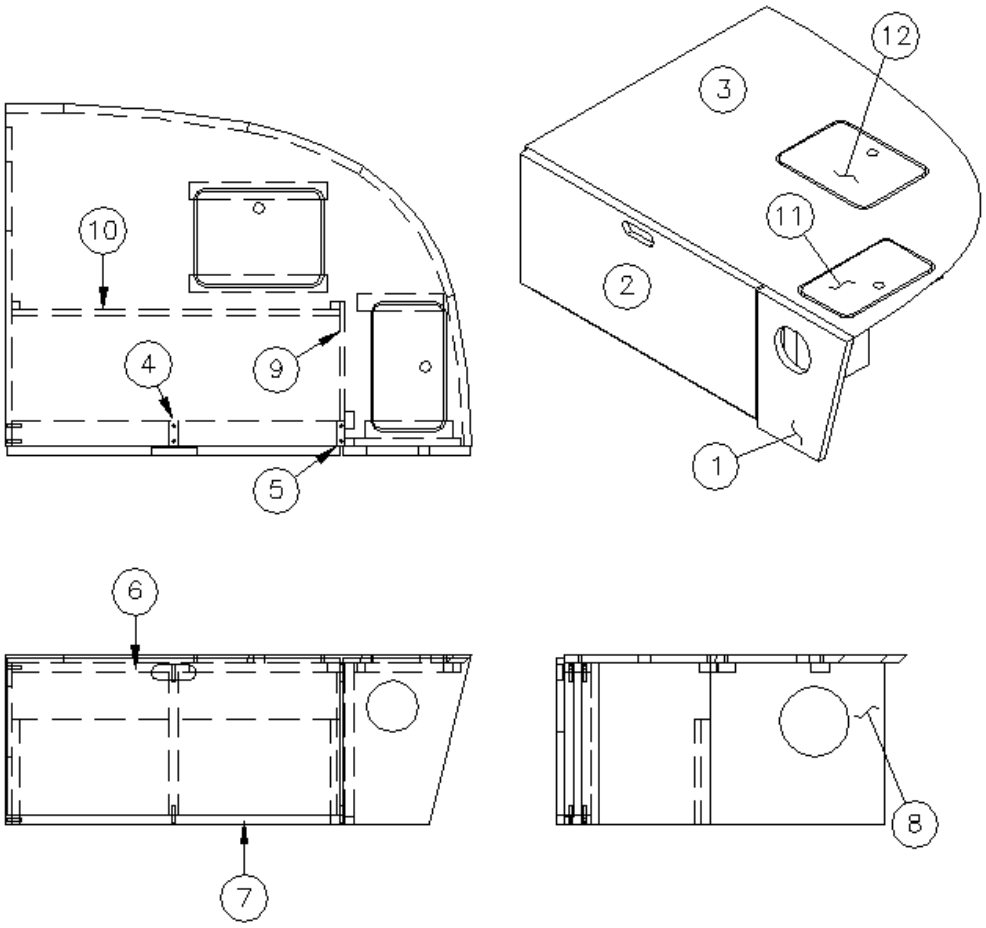

	966930-15	Roadside Dinette Seat
1.	966930-151	Panel, 8.88 x 14.38
2.	966930-152	Panel, 30.63 x 13.63
3.	966930-3	Panel, 29.5 x 40.19
4.	966930-4	Panel, 2.25 x 12.38
5.	966930-5	Panel, 2.25 x 12.38
6.	966930-6	Panel, 2.25 x 30.75
7.	966930-7	Panel, 2.25 x 30.75
8.	966930-8	Panel, 27.5 x 13.88
9.	966930-15I	Panel, 14 x 13.88
10.	966930-17	Panel, 9 x 30.25
11.	966930-18	Panel, 6 x 10.75
12.	966930-19	Panel, 8 x 10.75
	381775	Drawer pull
	381072-01	Hinge 3" x 2", Fixed pin
	381228-02	Catch, Grabber door (5lb Pull)

2018 INTERNATIONAL
FURNITURE, LOUNGE

Dinette Seat, Roadside, 25’, Signature

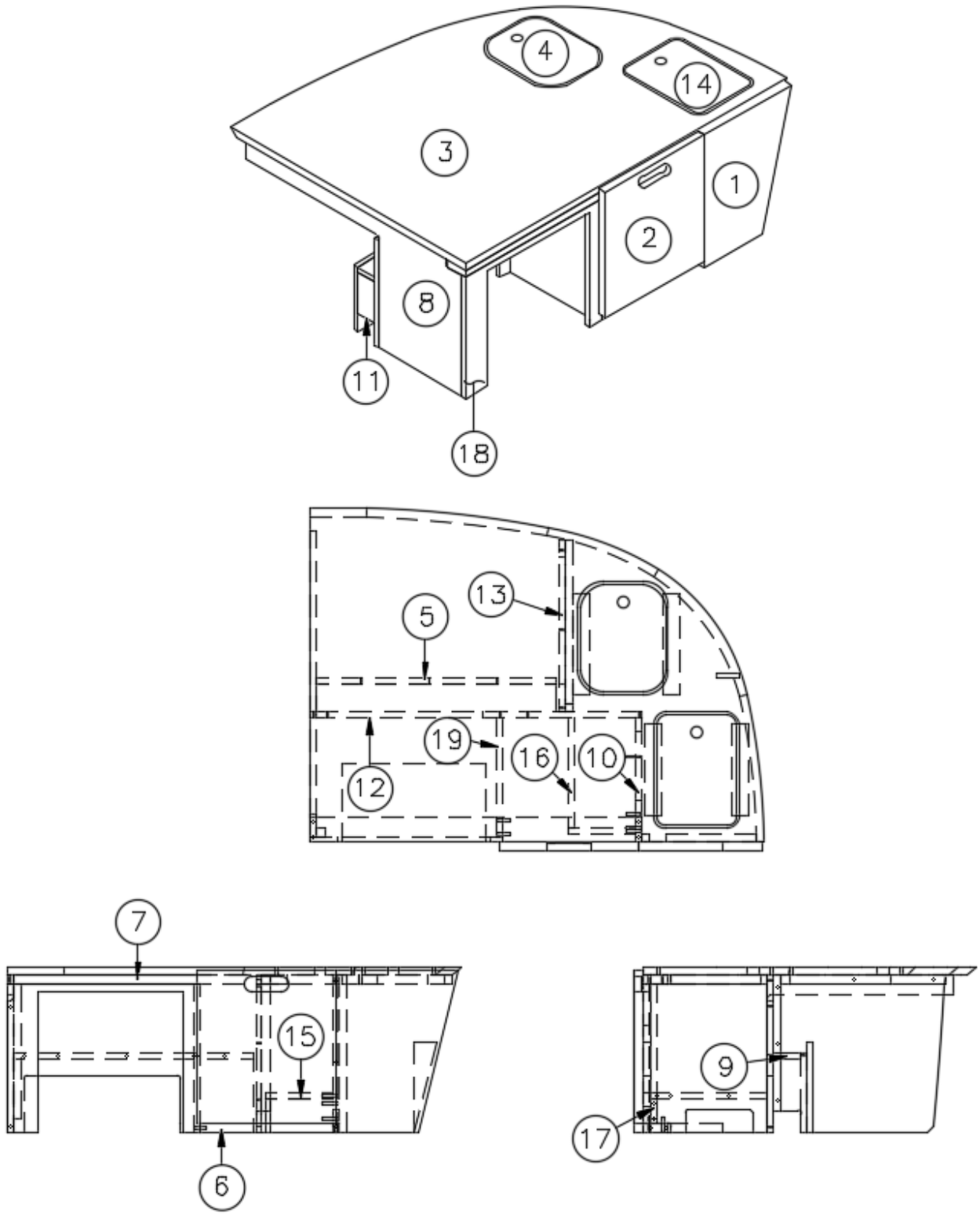

Parts Listed on Next Page

2018 INTERNATIONAL
FURNITURE, LOUNGE

Dinette Seat, Roadside, 25’, Signature

	968182	Roadside Dinette Seat
1.	968182-1	Panel, 14.38 x 10.87
2.	968182-2	Panel, 12.32 x 13.63
3.	968182-3	Panel, 29.5 x 40.19
4.	968182-4	Panel, 7.5 x 9.5
5.	968182-5	Panel, 21.75 x 7
6.	968182-6	Panel, 2.25 x 12.82
7.	968182-7	Panel, 2.25 x 29.31
8.	968182-8	Panel, 13.88 x 27
9.	968182-9	Panel, 21.75 x 2.5
10.	968182-10	Panel, 12.5 x 13.88
11.	968182-11	Panel, 4.5 x 2.5
12.	968182-12	Panel, 13.88 x 29.31
13.	968182-13	Panel, 13.88 x 15.27
14.	968182-22	Panel, 5.5 x 9.75
15.	968182-23	Panel, 10.25 x 6
16.	968182-24	Panel, 3 x 9.75
17.	968182-25	Panel, 2.25 x 6
18.	968182-26	Panel, 17 x 13.13
19.	968182-28	Panel, 13.3 x 10.5
	381775	Drawer pull, Flush Satin
	381072-01	Hinge, 3 x 2”, Open
	381228-02	Catch, Grabber door, 5LB
	365364-01	Edgebanding, .63", Ebony Woods
	365364-02	Edgebanding, .94”, Ebony Woods

2018 INTERNATIONAL
FURNITURE, LOUNGE

Dinette Seat, Roadside, 25’, Serenity

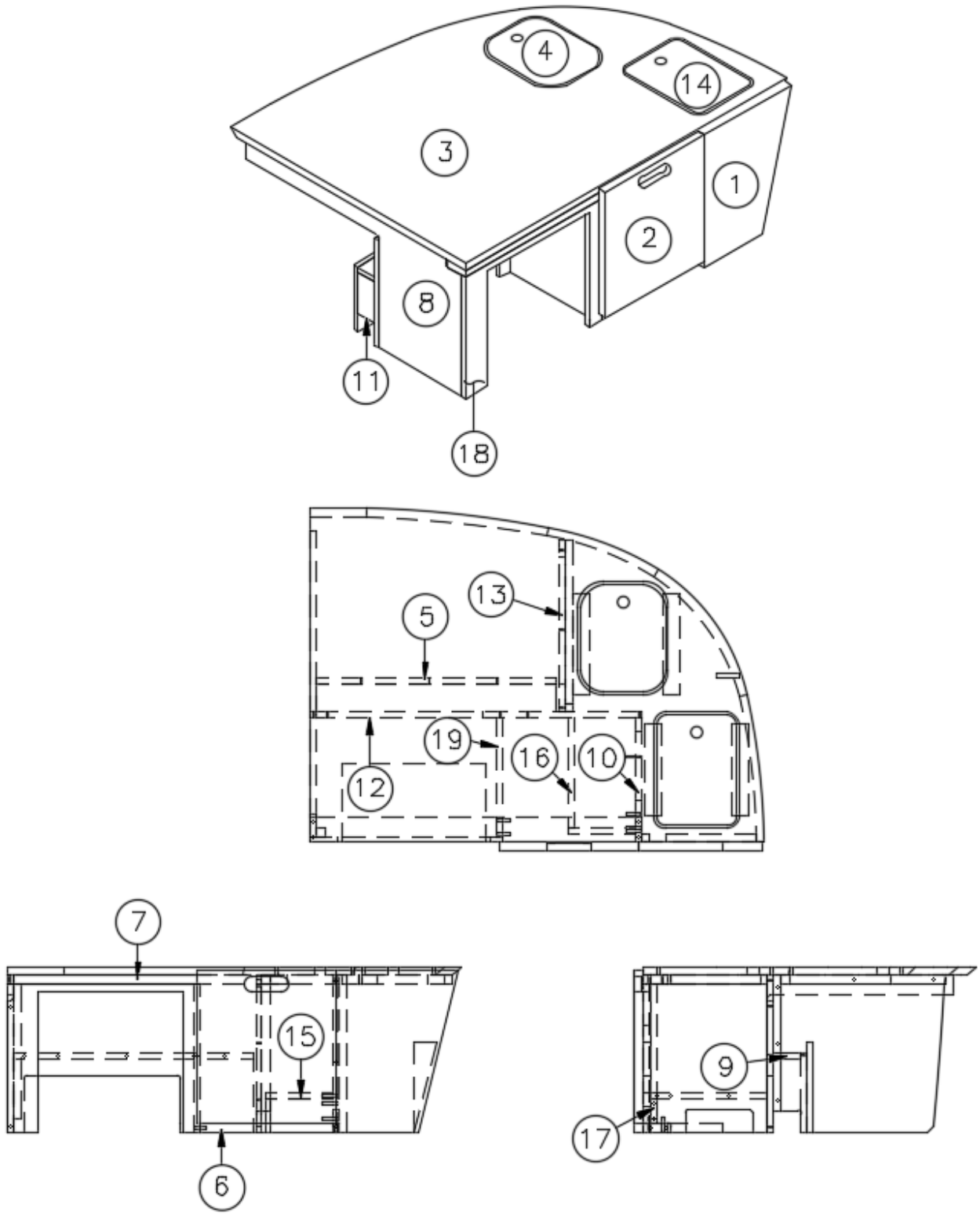

Parts Listed on Next Page

Dinette Seat, Roadside, 25’, Serenity

	968182-15	Roadside Dinette Seat
1.	968182-151	Panel, 14.38 x 10.87
2.	968182-152	Panel, 12.32 x 13.63
3.	968182-3	Panel, 29.5 x 40.19
4.	968182-4	Panel, 7.5 x 9.5
5.	968182-5	Panel, 21.75 x 7
6.	968182-6	Panel, 2.25 x 12.82
7.	968182-7	Panel, 2.25 x 29.31
8.	968182-8	Panel, 13.88 x 27
9.	968182-9	Panel, 21.75 x 2.5
10.	968182-10	Panel, 12.5 x 13.88
11.	968182-11	Panel, 4.5 x 2.5
12.	968182-12	Panel, 13.88 x 29.31
13.	968182-13	Panel, 13.88 x 15.27
14.	968182-22	Panel, 5.5 x 9.75
15.	968182-23	Panel, 10.25 x 6
16.	968182-24	Panel, 3 x 9.75
17.	968182-25	Panel, 2.25 x 6
18.	968182-1526	Panel, 17 x 13.13
19.	968182-28	Panel, 13.3 x 10.5
	381775	Drawer pull, Flush Satin
	381072-01	Hinge, 3 x 2”, Open
	381228-02	Catch, Grabber door, 5LB
	365344-01	Edgebanding, .63", Pearl Bisque
	365344-02	Edgebanding, .94”, Pearl Bisque

2018 INTERNATIONAL
FURNITURE, LOUNGE

Dinette Seat, Curbside, 25’ Signature

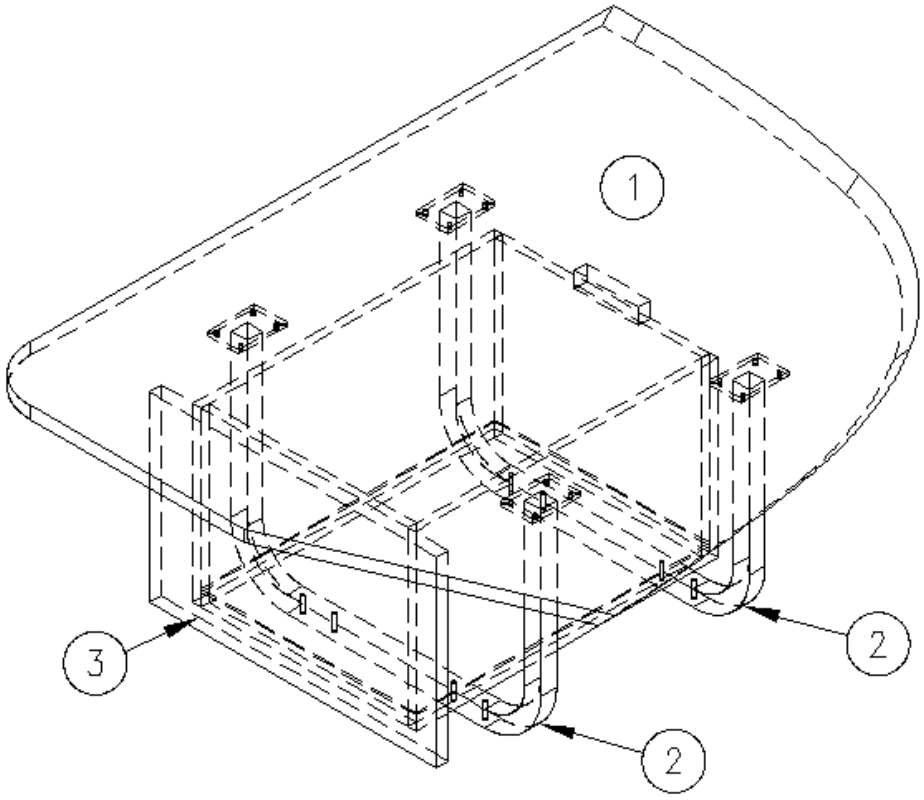

	966928	Curbside Dinette Seat
1.	966928-1	Panel, 33.38 x 40.18
2.	454177	Legs, Aluminum
3.	966928-4	Door, 11.5 x 18
	964909-11	Drawer box, 10 x 14 x 19
	381833-01	Drawer slide, 18"
	381074	Bull dog catch
	381775	Drawer pull

2018 INTERNATIONAL
FURNITURE, LOUNGE

Dinette Seat, Curbside, 25’ Serenity

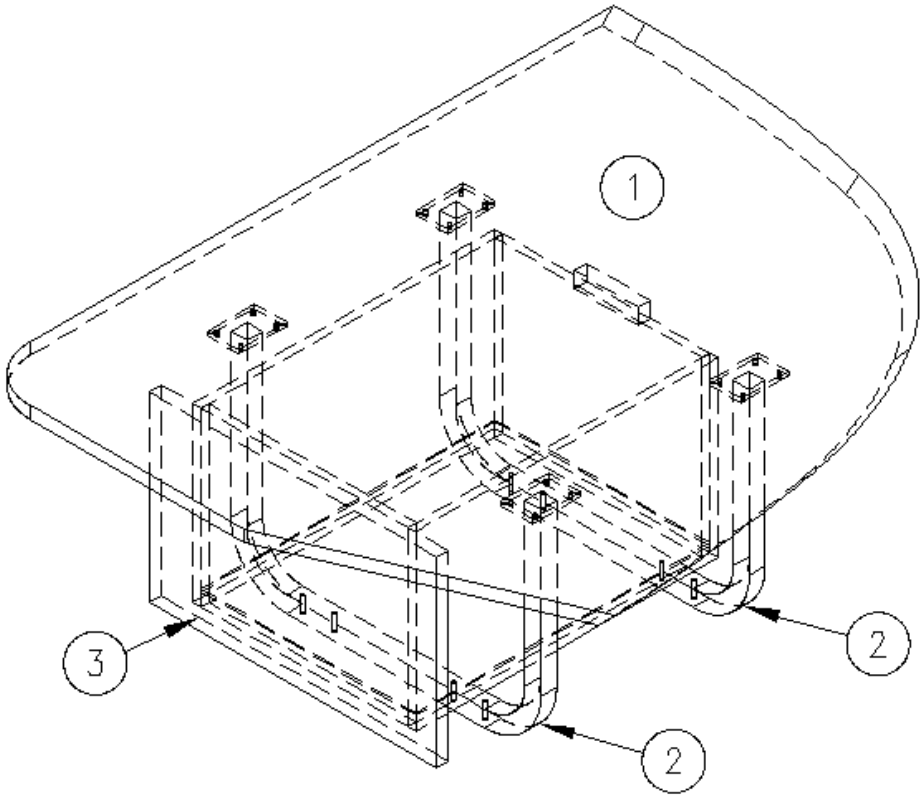

	966928-15	Curbside Dinette Seat
1.	966928-1	Panel, 33.38 x 40.18
2.	454177	Legs, Aluminum
3.	964909-11	Drawer box, 10 x 14 x 19
	966928-154	Door, 11.5 x 18
	381833-01	Drawer slide, 18"
	381074	Bull dog catch
	381775	Drawer pull

2018 INTERNATIONAL
FURNITURE, LOUNGE

Dinette Seat, Curbside, 25FB, 27FB Signature

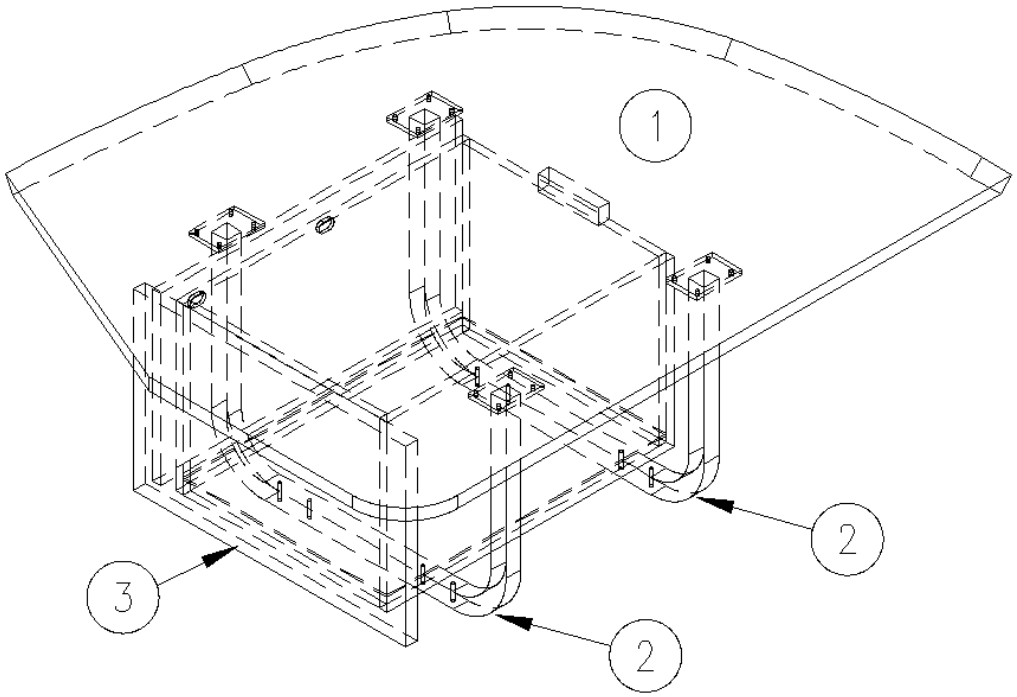

	966889	Curbside Dinette Seat
1.	966889-1	Panel, 33.38 x 40.18
2.	454177	Leg, Aluminum
3.	966889-04	Door, 11.5 x 18
	964909-11	Drawer box, 10" x 14” x 19”
	381833-01	Drawer slide, 18"
	381074	Bull dog catch
	365364-02	Edgebanding, .94", Ebony
	203439	Storage box, 17" x 11.13" x 6.38"
	381775	Drawer pull

2018 INTERNATIONAL
FURNITURE, LOUNGE

Dinette Seat, Curbside, 25FB, 27FB Serenity

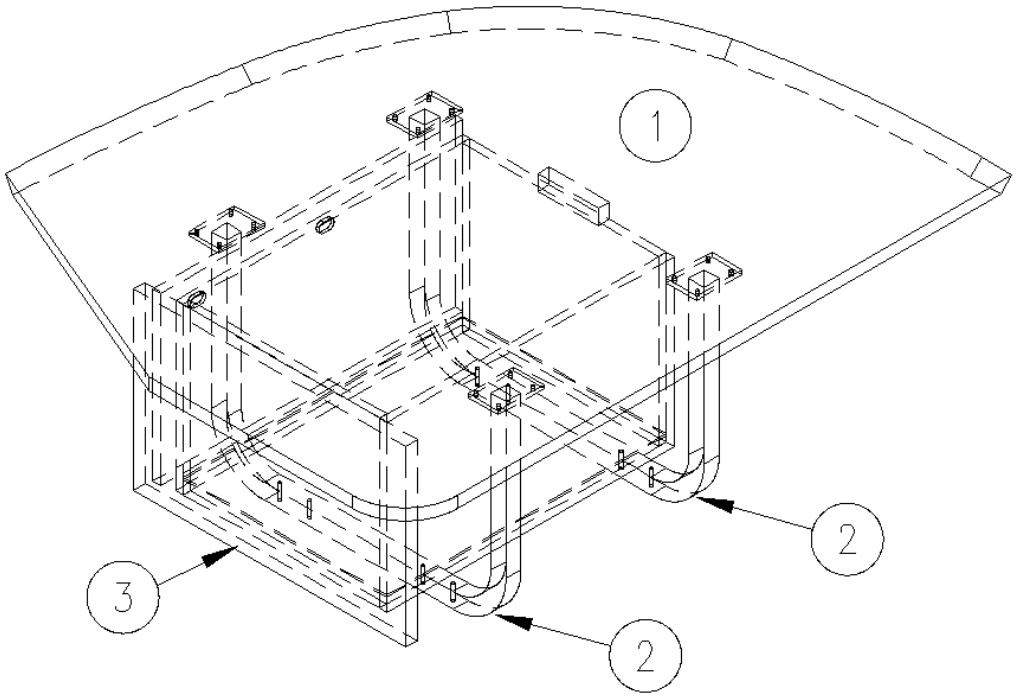

	966889-15	Curbside Dinette Seat
1.	966889-1	Panel, 33.38 x 40.18
2.	454177	Leg, Aluminum
3.	966889-154	Door, 11.5 x 18
	964909-11	Drawer box, 10" x 14” x 19”
	381833-01	Drawer slide, 18"
	381074	Bull dog catch
	365344-02	Edgebanding, .94”, Pearl Bisque
	203439	Storage box, 17" x 11.13" x 6.38"
	381775	Drawer pull

2018 INTERNATIONAL
FURNITURE, LOUNGE

Dinette Seat, Roadside, 25FB, 27FB Signature

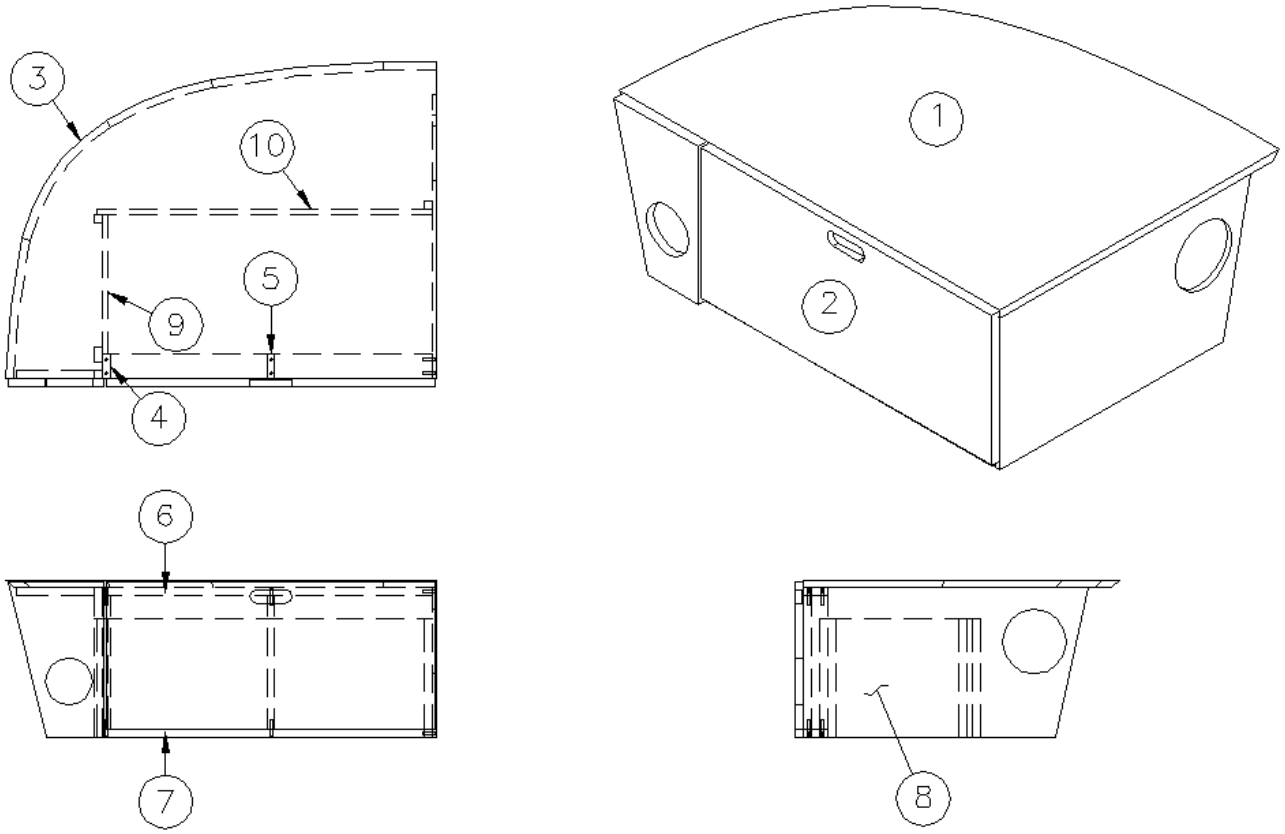

	966890	Roadside Dinette Seat
1.	966890-1	Panel, 14.38 x 8.88
2.	966890-2	Panel, 13.63 x 30.63
3.	966890-3	Panel, 29.5 x 40.19
4.	966890-4	Panel, 2.25 x 12.38
5.	966890-5	Panel, 2.25 x 12.38
6.	966890-6	Panel, 2.25 x 30.75
7.	966890-7	Panel, 2.25 x 30.75
8.	966890-8	Panel, 26.5 x 13.88
9.	966890-16	Panel, 13 x 11
10.	966890-17	Panel, 31.25 x 11
	381775	Drawer pull
	381072-01	Hinge, 3" x 2", Fixed pin
	381228-02	Catch, Grabber door (5lb Pull)
	365364-02	Edgebanding, .94", Ebony
	365364-01	Edgebanding, .63", Ebony
	203439	Storage box, 17" x 11.13" x 6.38"

2018 INTERNATIONAL
FURNITURE, LOUNGE

Dinette Seat, Roadside, 25FB, 27FB Serenity

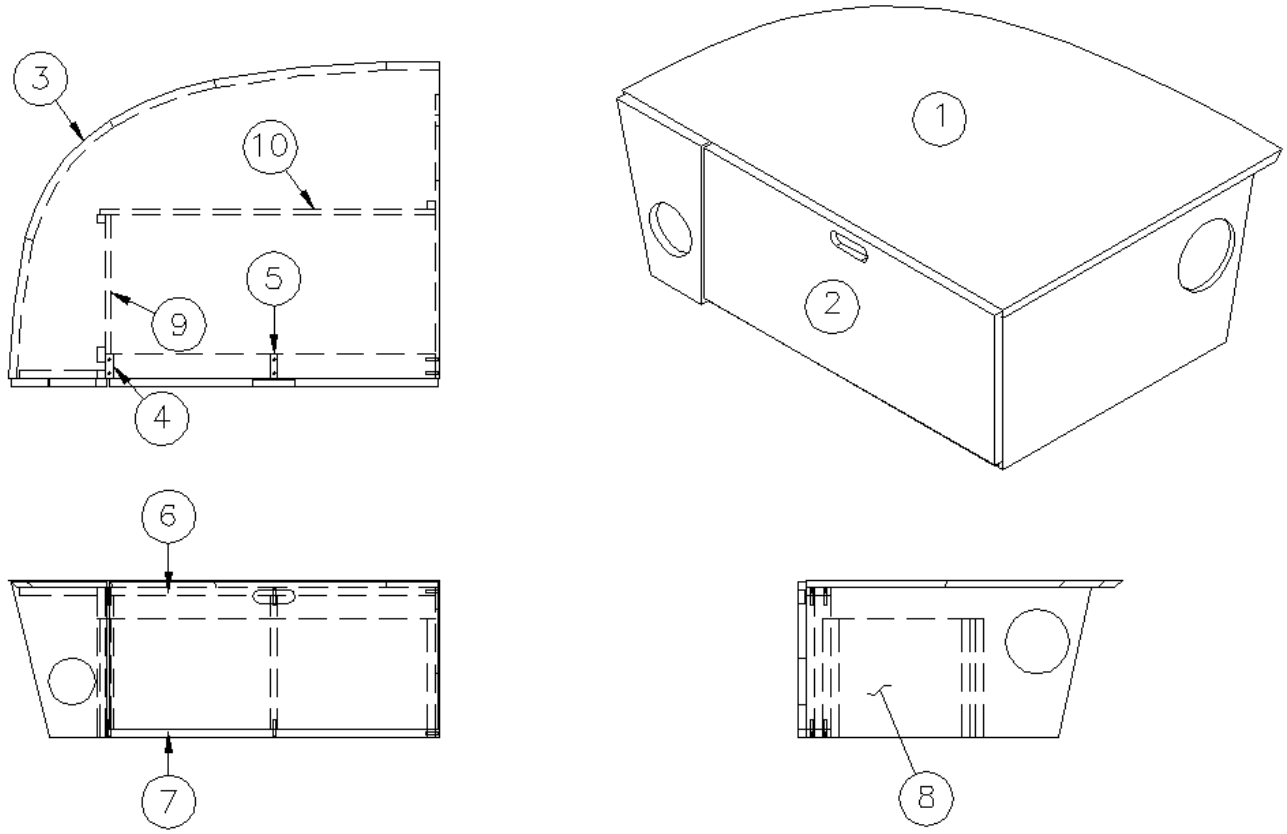

	966890-15	Roadside Dinette Seat
1.	966890-151	Panel 14.38 x 8.88
2.	966890-152	Panel 13.63 x 30.63
3.	966890-3	Panel, 29.5 x 40.19
4.	966890-4	Panel, 2.25 x 12.39
5.	966890-5	Panel, 2.25 x 12.38
6.	966890-6	Panel, 2.25 x 30.75
7.	966890-7	Panel, 2.25 x 30.75
8.	966890-8	Panel, 27.5 x 13.88
9.	966890-16	Panel, 13 x 11
10.	966890-17	Panel, 31.25 x 11
	381775	Drawer pull
	381072-01	Hinge, 3" x 2", Fixed pin
	381228-02	Catch, Grabber door (5lb Pull)
	365344-02	Edgebanding, .94”, Pearl Bisque
	365344-01	Edgebanding, .63”, Pearl Bisque
	203439	Storage Box, 17" x 11.13" x 6.38"

Dinette Table, 23CB

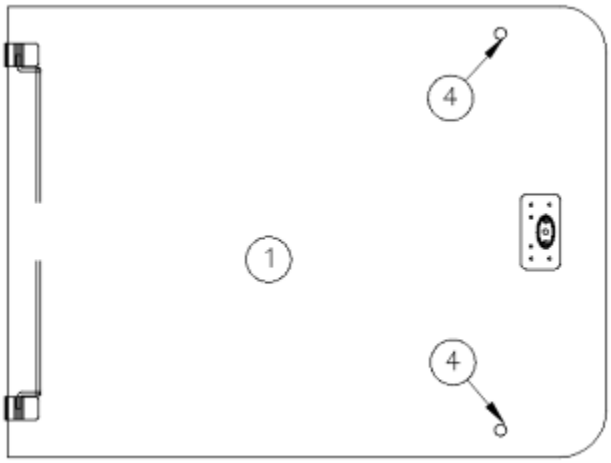

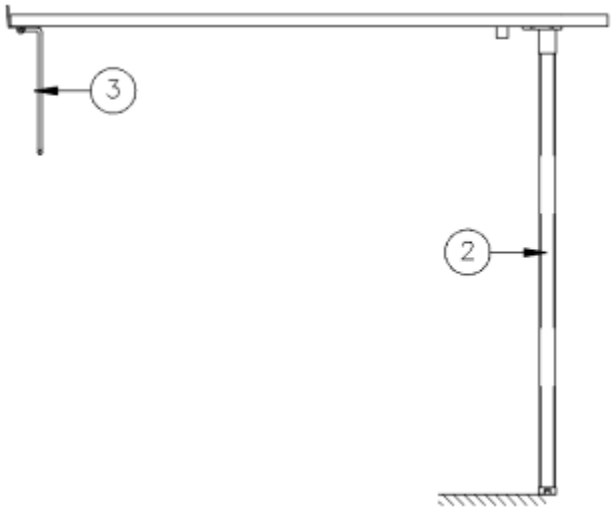

	967154	Dinette Table, Signature
	967154-15	Dinette Table, Serenity
1.	967154-1	Table top, 29.31 x 39, Signature
	967154-151	Table top, 29.31 x 39, Serenity
2.	382177	Leg, Folding
3.	380284-02	Bracket, Table hinge assembly kit
	380284-03	Table hinge brackets
4.	381136	Rubber bumper

2018 INTERNATIONAL
FURNITURE, LOUNGE

Dinette Table, 25', 25FB, 27FB

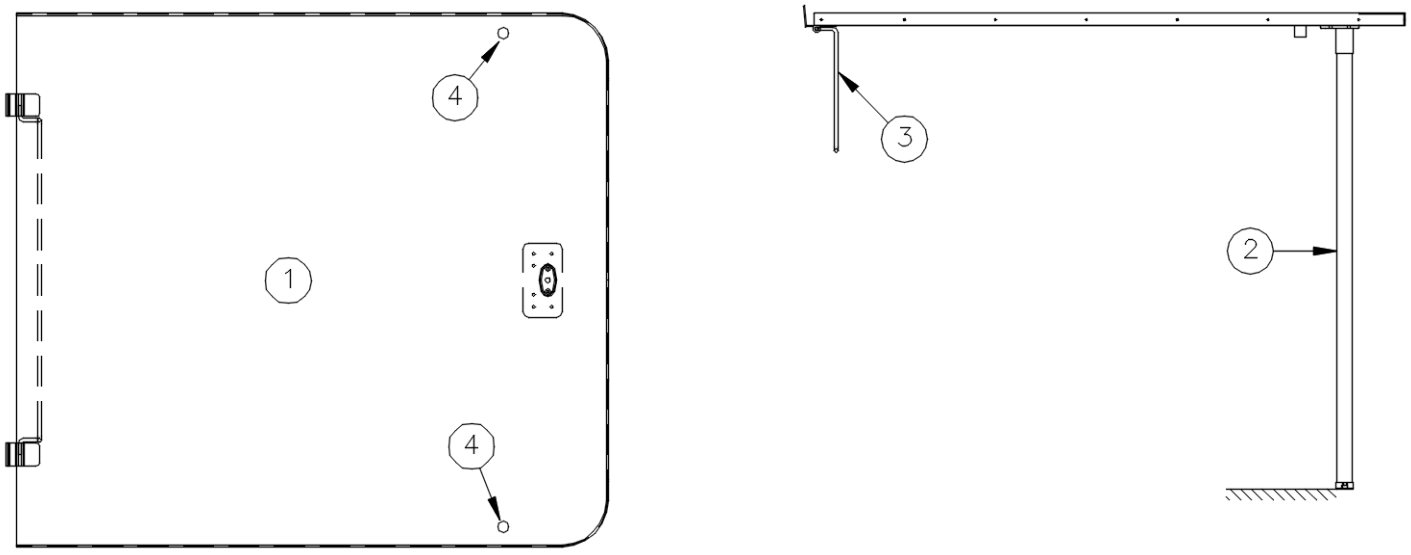

	967156	Dinette Table, Signature
	967156-15	Dinette Table, Serenity
1.	967156-1	Table top, 35 x 39, Signature
	967156-151	Table top, 35 x 39, Serenity
2.	382177	Leg, Folding
3.	380284-02	Bracket, Table hinge assembly kit
	380284-03	Table hinge brackets
4.	381136	Rubber bumper

2018 INTERNATIONAL
FURNITURE, LOUNGE

Roof Locker, Front Liner, 23CB Signature

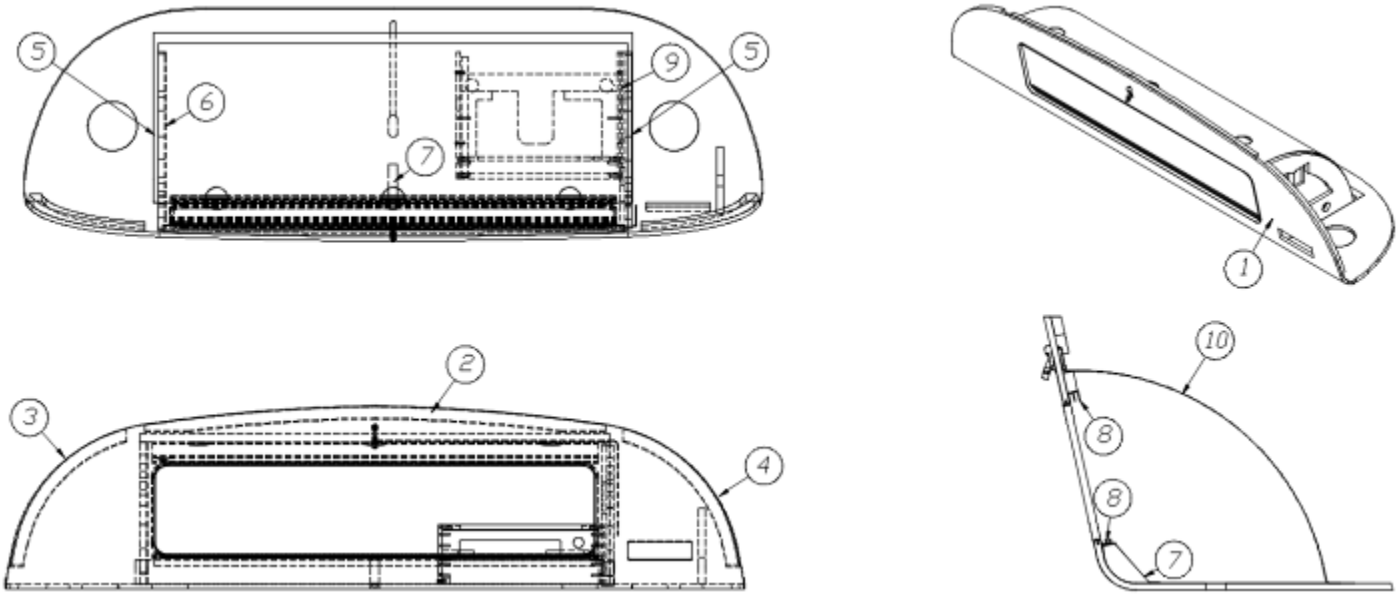

	966942	Front Liner Roof Locker
1.	801731	Face, NB front
2.	801596-01	Backer, WB liner locker center
3.	801596-02	Backer, LH
4.	801596-03	Backer, RH
5.	801594	Divider, Liner locker
6.	801595	Divider w/laminate
7.	115226-01	Bracket, Formed, Locker center support
8.	203388	Sliding door track
9.	801911-02	Divider, Liner w/Blu-Ray player
10.	115264-02	Pan, Liner locker
	203749-09	Door, 11.31 x 26.25
	115261-02	Angle, Formed
	203445	T-molding, .5625", Black
	201673	Reverse cove molding, White
	703991	Pile seal weather strip
	511314	Universal bushing, 1” ID, Black
	968343	Blu-Ray shelf
	512577	Bushing, Strain relief

2018 INTERNATIONAL
FURNITURE, LOUNGE

Roof Locker, Front Liner, 23CB Serenity

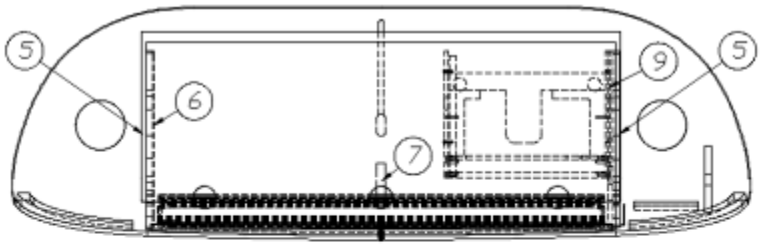

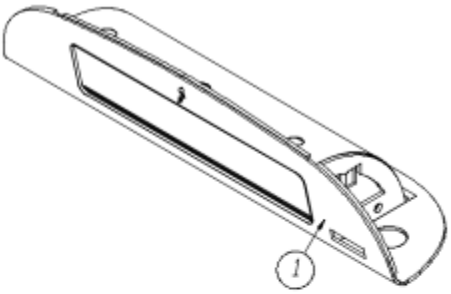

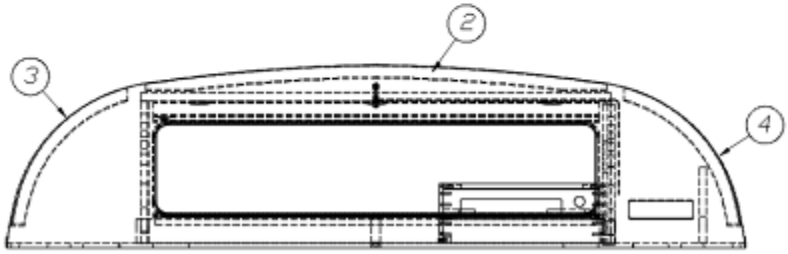

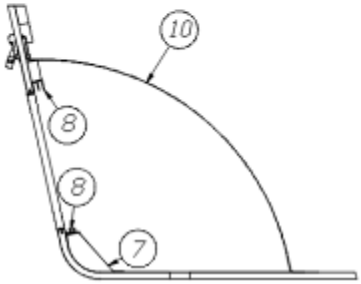

	967549-15	Front Liner Roof locker
1.	801826	Face, NB front
2.	801596-01	Backer, WB liner locker center
3.	801596-02	Backer, LH
4.	801596-03	Backer, RH
5.	801594	Divider, Liner locker
6.	801595	Divider w/laminate
7.	115226-01	Bracket, Formed, Locker center support
8.	203388	Sliding door track
9.	801911-02	Divider, Liner w/Blu-Ray player
10.	115264-02	Pan, Liner locker
	203677-02	Door, 11.31 x 26.25
	114812	Aluminum angle, 1 x 1
	382114	Knob, Brushed Satin Nickel
	201673	Reverse cove molding, White
	703991	Pile seal weather strip
	968343	Blu-Ray shelf

2018 INTERNATIONAL
FURNITURE, LOUNGE

Roof Locker, Aft w/Radio, 25FB, 27FB Signature

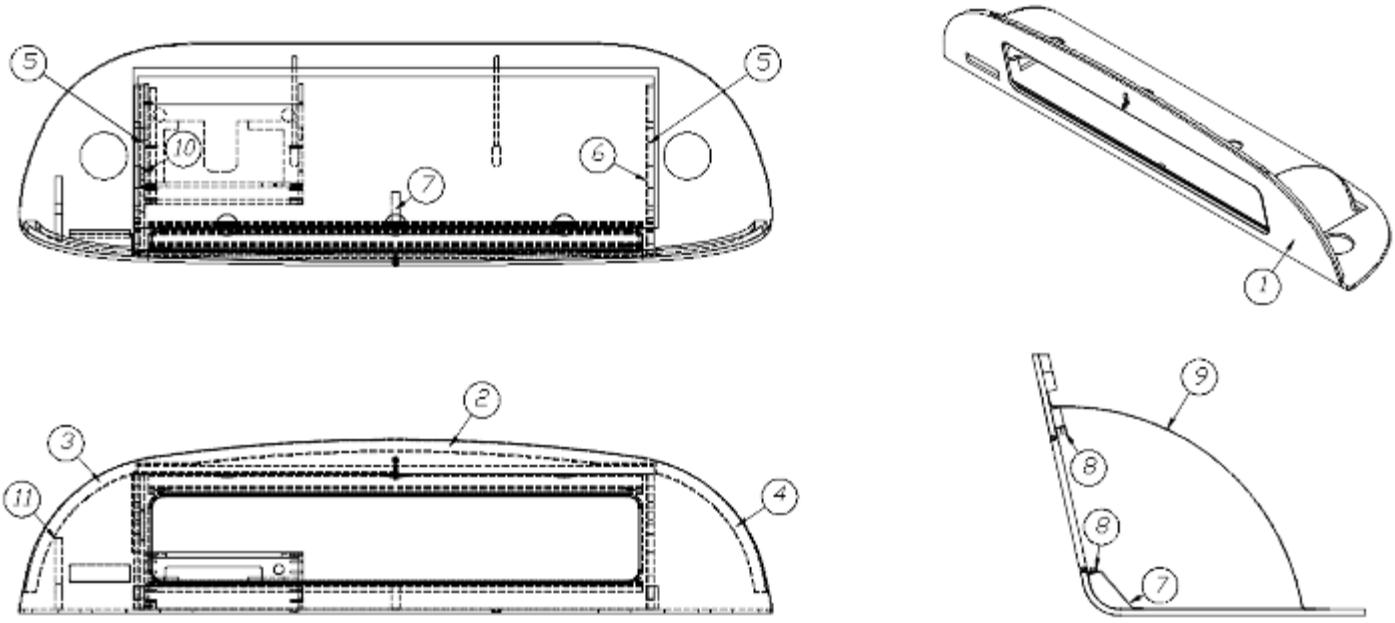

	966869	Aft Roof locker w/Radio
1.	801722	Face, Liner locker w/radio, Speakers
2.	801596-01	Backer, WB liner locker center
3.	801596-02	Backer, LH
4.	801596-03	Backer, RH
5.	801594	Divider, Liner locker
6.	801595	Divider w/laminate
7.	115226-01	Bracket, Formed, Locker center support
8.	203388	Sliding door track
9.	115264-01	Pan, WB front
10.	801911-02	Divider, Liner w/Blu-Ray player
11.	801710	Divider support
	203749-08	Door, 11.31 x 30
	203445	T-molding, Flexible Black poly
	201673	Reverse cove molding, White
	703991	Pile seal weather strip
	115261-01	Angle, Formed
	968343	Blu-Ray shelf
	512577	Bushing, Strain relief

2018 INTERNATIONAL
FURNITURE, LOUNGE

Roof Locker, Aft w/Radio, 25FB, 27FB Serenity

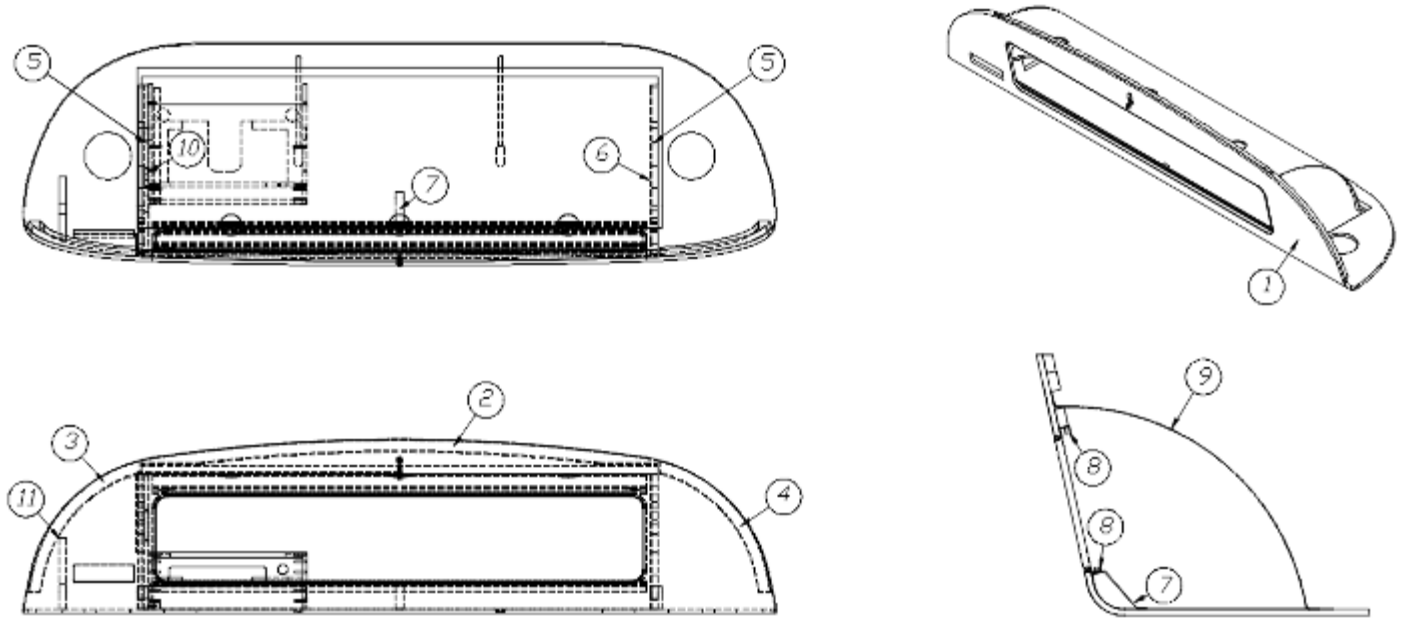

	967556-15	Aft Roof locker w/Radio
1.	801849	Face, Liner locker w/radio, Speakers
2.	801596-01	Backer WB liner locker center
3.	801596-02	Backer, LH
4.	801596-03	Backer, RH
5.	801594	Divider, Liner locker
6.	801595	Divider w/laminate
7.	115226-01	Bracket, Formed, Locker center support
8.	203388	Sliding door track
9.	115264-01	Pan, WB front
10.	801911-02	Divider, Liner w/Blu-Ray player
11.	801710	Divider support
	203677-03	Door, 11.31 x 30
	201673	Reverse cove molding, White
	512577	Bushing, Strain relief
	114812	Aluminum angle, 1 x 1
	382114	Knob, Brushed Satin Nickel
	968343	Blu-Ray shelf

2018 INTERNATIONAL
FURNITURE, LOUNGE

Roof Locker, Front w/Radio, 28’ A2GO, 25’, 28’, 30’ Signature

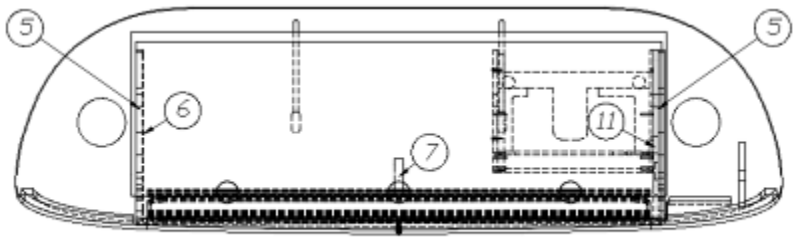

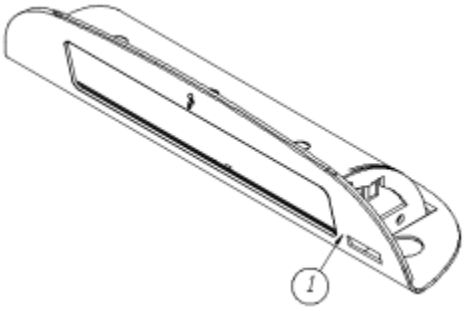

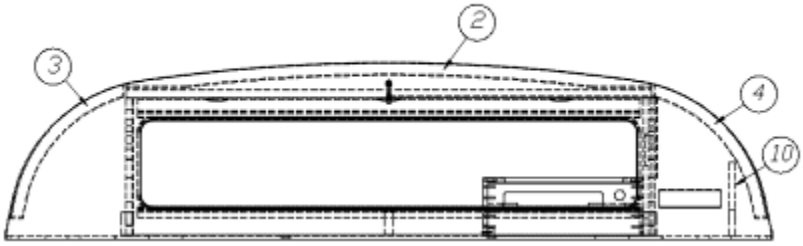

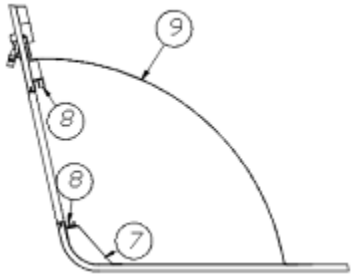

	967502	Front Roof locker w/Radio
	967502-01	Front Roof locker w/Radio, A2Go
1.	801593-01	Face, WB front
2.	801596-01	Backer, WB liner locker center
3.	801596-02	Backer, LH
4.	801596-03	Backer, RH
5.	801594	Divider, Liner locker
6.	801595	Divider w/laminate
7.	115226-01	Bracket, Formed, Locker center support
8.	203388	Sliding door track
9.	115264-01	Pan, WB front
10.	801710	Divider support
11.	801911-02	Divider, Liner locker w/Blu-Ray player
	801911-04	Divider, Liner locker w/Blu-Ray, A2GO
	203749-08	Door, 11.31 x 30
	201673	Reverse cove molding, White
	115261-01	Angle, Formed
	968343	Blu-Ray shelf
	703991	Seal pile weather strip

2018 INTERNATIONAL
FURNITURE, LOUNGE

Roof Locker, Front w/Radio, 25’, 28’, 30’ Serenity

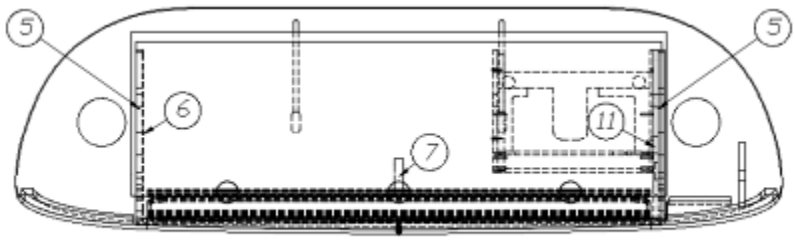

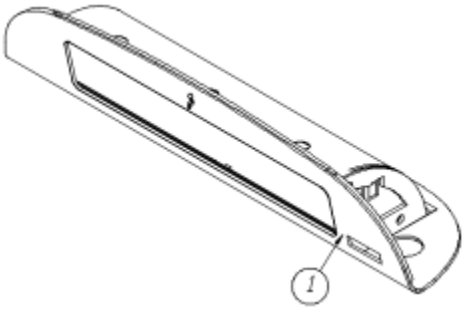

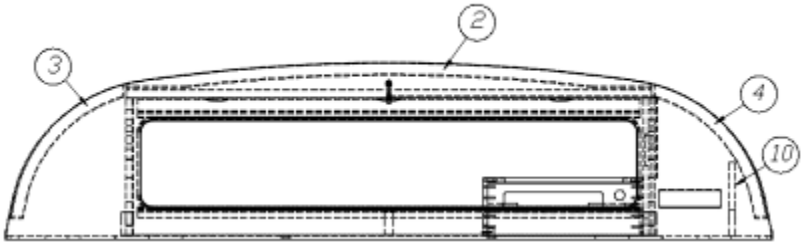

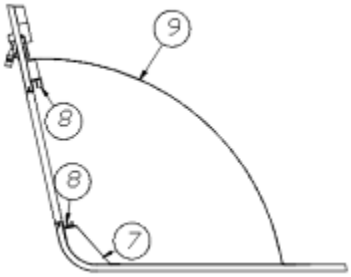

	967568-15	Front Roof locker w/Radio
1.	801859	Face, Liner locker w/radio, Speakers
2.	801596-01	Backer, WB liner locker center
3.	801596-02	Backer, LH
4.	801596-03	Backer, RH
5.	801594	Divider, Liner locker
6.	801595	Divider w/laminate
7.	115226-01	Bracket, Formed, Locker center support
8.	203388	Sliding door track
9.	115264-01	Pan, WB front
10.	801710	Divider support
11.	801911-02	Divider, Liner w/Blu-Ray player
	203677-03	Door, 11.31 x 30
	201673	Reverse cove molding, white
	114812	Aluminum angle, 1 x 1
	382114	Knob, Brushed Satin Nickel
	703991	Pile seal weather strip
	968343	Blu-Ray shelf

2018 INTERNATIONAL
FURNITURE, LOUNGE

Sofa, 23CB Signature

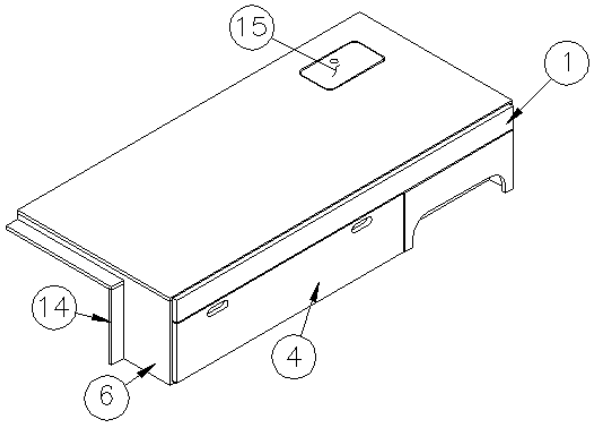

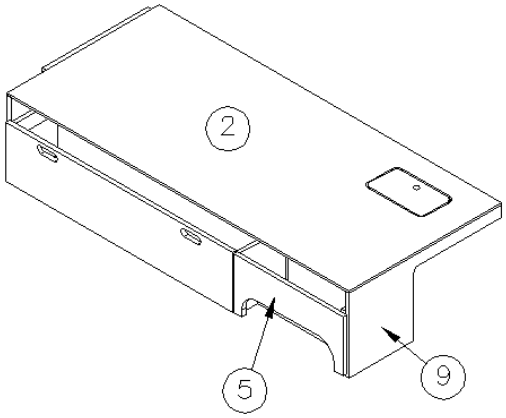

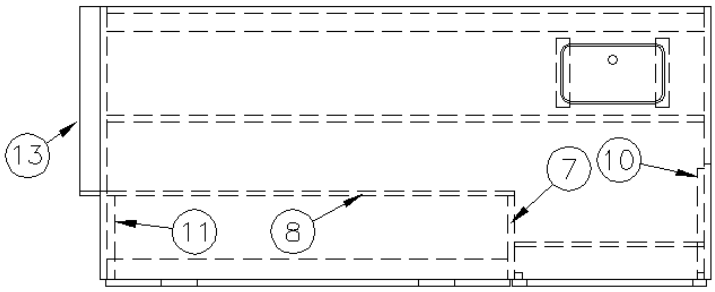

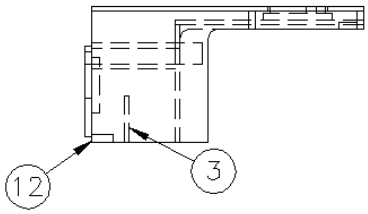

	966929	Sofa Assembly
1.	966888	Sofa bed
2.	966929-2	Panel, 66.19 x 29.5
3.	966929-3	Panel, 20.5 x 5
4.	966929-4	Panel, 43.88 x 9.88
5.	966929-5	Panel, 21.13 x 9.88
6.	966929-6	Panel, 14.13 x 29.5
7.	966929-7	Panel, 10.13 x 9
8.	966929-8	Panel, 10.13 x 44
9.	966929-9	Panel, 14.13 x 29.5
10.	966929-10	Panel, 2.25 x 12
11.	966929-11	Panel, 2.25 x 9
12.	966929-15I	Panel, 2.25 x 43.44
13.	966929-25	Panel, 2.25 x 20.5
14.	966929-26	Panel, 12.63 x 2.25
15.	966929-27	Panel, 10.75 x 6
	381775	Drawer pull
	381072-01	Hinge, 3" x 2", Fixed pin
	381228-02	Catch, Grabber door (5lb Pull)

2018 INTERNATIONAL
FURNITURE, LOUNGE

Sofa, 23CB Serenity

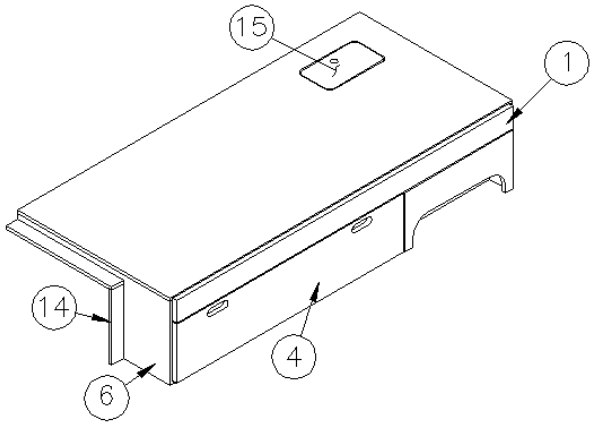

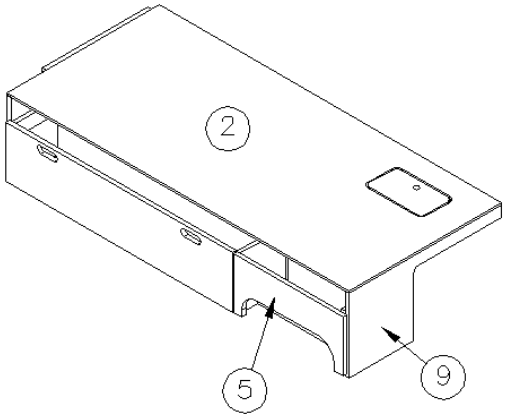

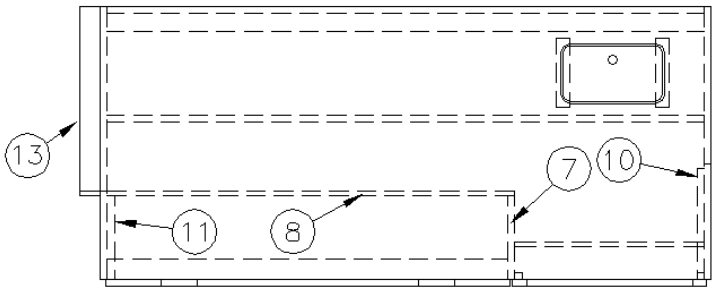

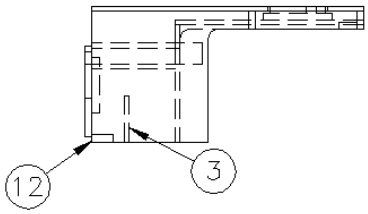

	966929-15	Sofa Assembly
1.	966888-15	Sofa bed
2.	966929-2	Panel, 66 x 29.5
3.	966929-153	Panel, 20.5 x 5
4.	966929-154	Panel, 43.88 x 9.88
5.	966929-155	Panel, 21.13 x 9.88
6.	966929-6	Panel, 14.13 x 29.5
7.	966929-157	Panel, 10.13 x 9
8.	966929-8	Panel, 10.13 x 44
9.	966929-159	Panel, 14.13 x 29.5
10.	966929-10	Panel, 2.25 x 12
11.	966929-11	Panel, 2.25 x 9
12.	966929-15I	Panel, 2.25 x 43.44
13.	966929-1525	Panel, 2.25 x 20.5
14.	966929-1526	Panel, 12.63 x 2.25
15.	966929-27	Panel, 10.75 x 6
	381775	Drawer pull
	381072-01	Hinge, 3" x 2", Fixed pin
	381228-02	Catch, Grabber door (5lb Pull)

2018 INTERNATIONAL
FURNITURE, LOUNGE

Sofa, 25FB, 27FB Signature

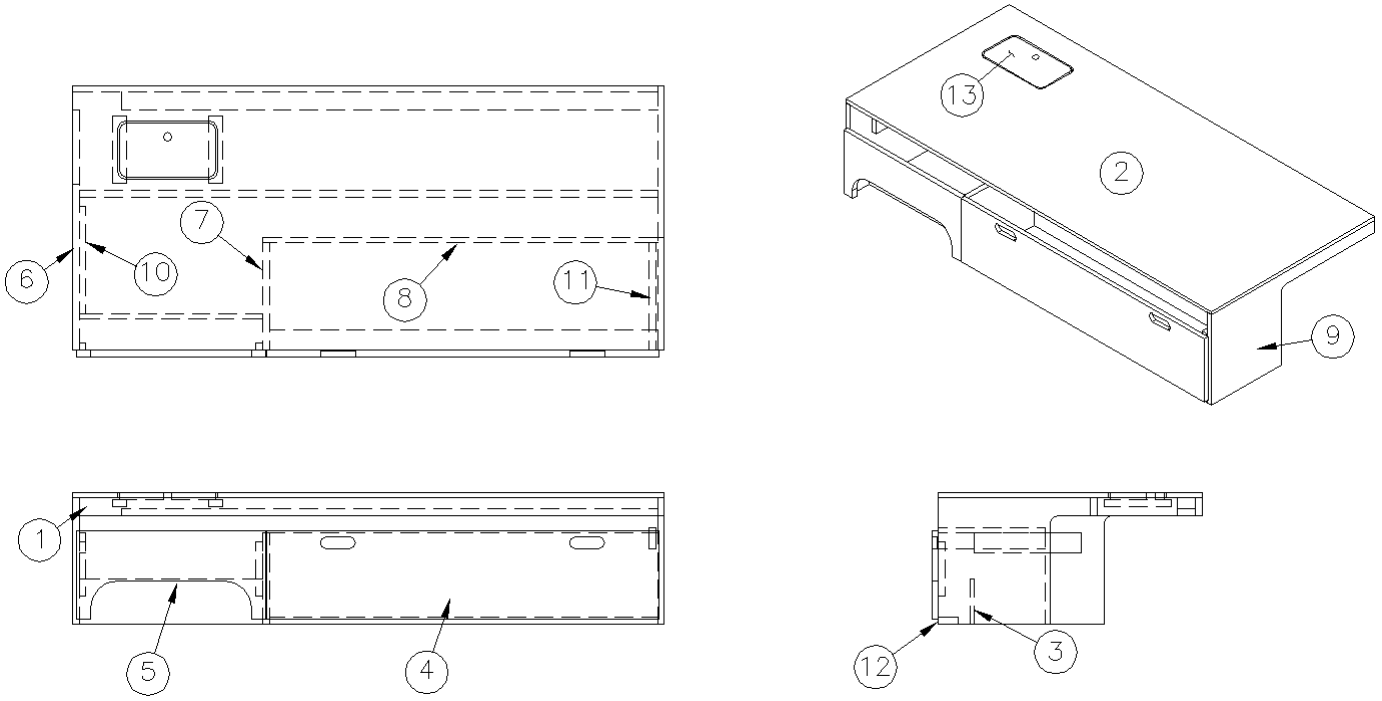

	966887	Sofa Assembly
1.	966888	Sofa bed
2.	966887-2	Panel, 29.5 x 66.19
3.	966887-3	Panel, 20.5 x 5
4.	966887-4	Panel, 9.88 x 43.88
5.	966887-5	Panel, 9.88 x 21.13
6.	966887-6	Panel, 14.13 x 29.5
7.	966887-7	Panel, 10.13 x 12
8.	966887-8	Panel, 10.13 x 44.19
9.	966887-9	Panel, 14.13 x 29.5
10.	966887-10	Panel, 2.25 x 12
11.	966887-11	Panel, 2.25 x 12
12.	966887-15I	Panel, 2.25 x 43.44
13.	966887-25	Panel, 10.75 x 6
	381775	Drawer pull, Flush Satin
	381072-01	Hinge 3" x 2", Fixed pin
	381228-02	Catch, Grabber door (5lb Pull)
	365009	Foam tape, 1 x 1

2018 INTERNATIONAL
FURNITURE, LOUNGE

Sofa, 25FB, 27FB Serenity

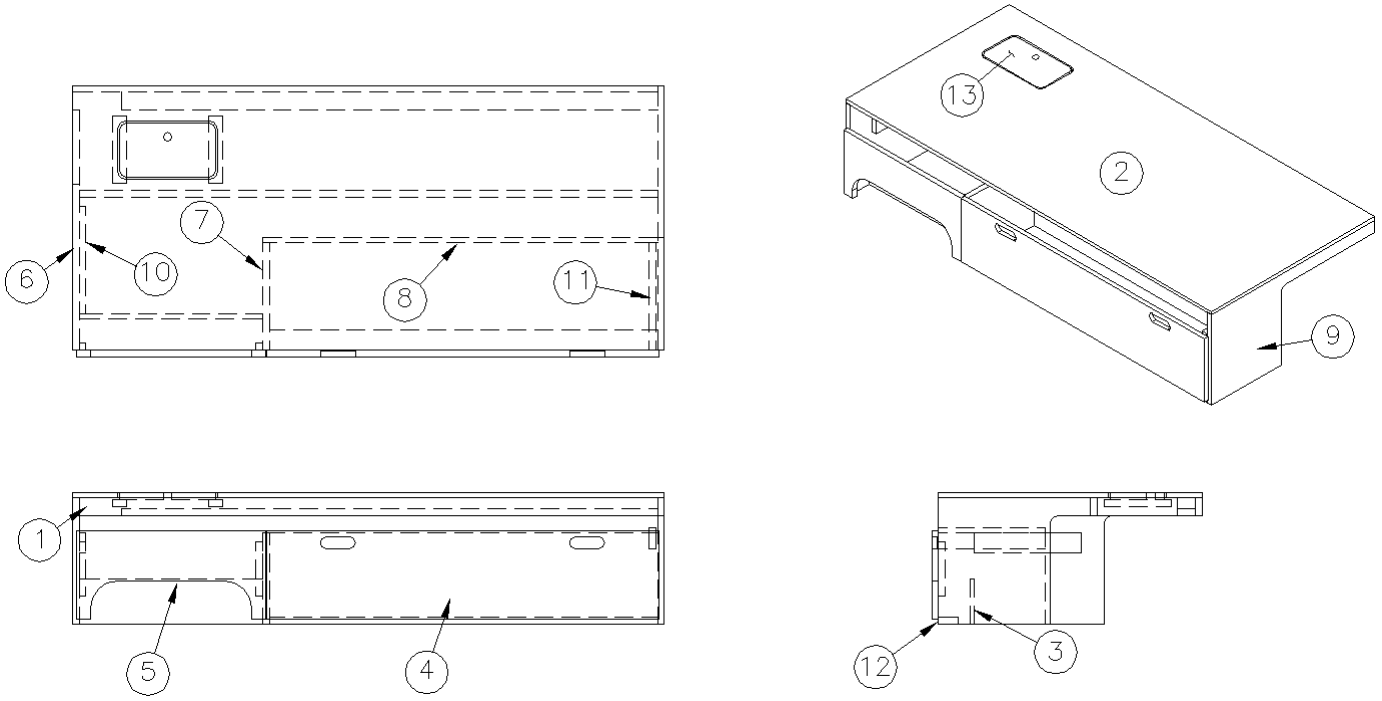

	966887-15	Sofa Assembly
1.	966888-15	Sofa bed
2.	966887-2	Panel, 17 x 63
3.	966887-153	Panel, 20.5 x 5
4.	966887-154	Panel, 9.88 x 43.88
5.	966887-155	Panel, 9.88 x 21.13
6.	966887-156	Panel, 14.13 x 29.5
7.	966887-157	Panel, 10.13 x 12
8.	966887-8	Panel, 10.13 x 44
9.	966887-9	Panel, 14.13 x 29.5
10.	966887-10	Panel, 2.25 x 12
11.	966887-11	Panel, 2.25 x 12
12.	966887-15I	Panel, 2.25 x 43.25
13.	966887-25	Panel, 10.75 x 6
	381775	Pull, Flush, Satin
	381072-01	Hinge, Fixed pin
	381228-02	Catch, Grabber door (5lb Pull)
	365009	Foam tape, 1 x 1

2018 INTERNATIONAL
FURNITURE, LOUNGE

Sofa, 28’, 30’ Signature

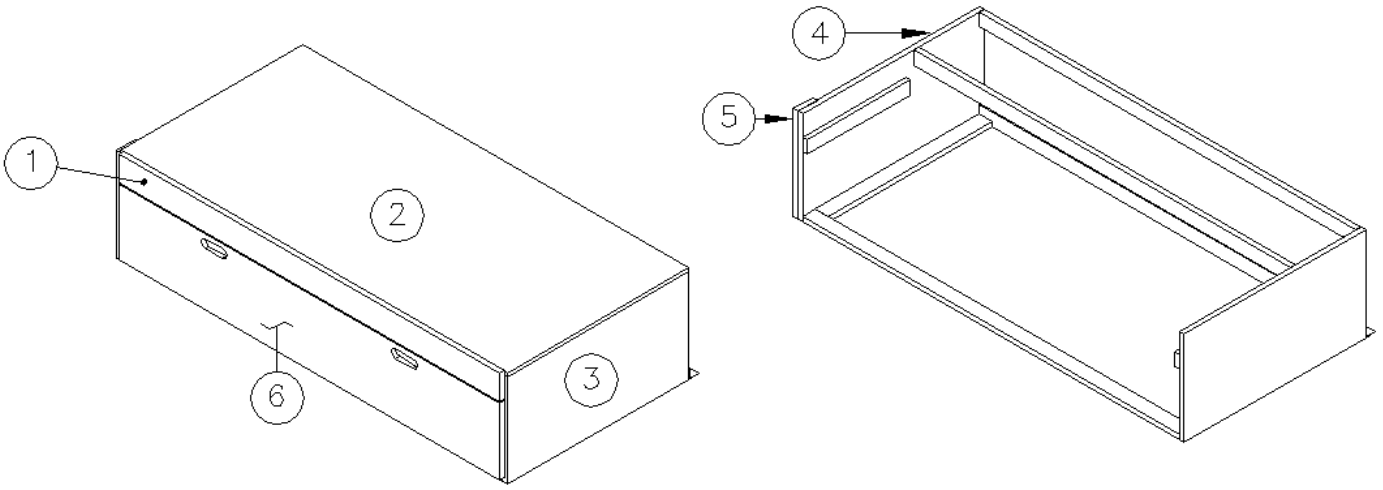

	966970	Sofa Assembly
1.	966971	Sofa bed
2.	966970-2	Panel, 60 x 28.25
3.	966970-3	Panel, 14.5 x 28.25
4.	966970-4	Panel, 14.5 x 28.25
5.	966970-5	Panel, 14.5 x 3
6.	966970-6	Door, 10.25” X 59.13”
	381775	Drawer pull, Flush Satin
	381072-01	Hinge, 3" x 2", Fixed Pin
	381228-02	Catch, Grabber door (5lb Pull)
	114809	Aluminum angle 1.5 x 1.5

2018 INTERNATIONAL
FURNITURE, LOUNGE

Sofa, 28', 30' Serenity

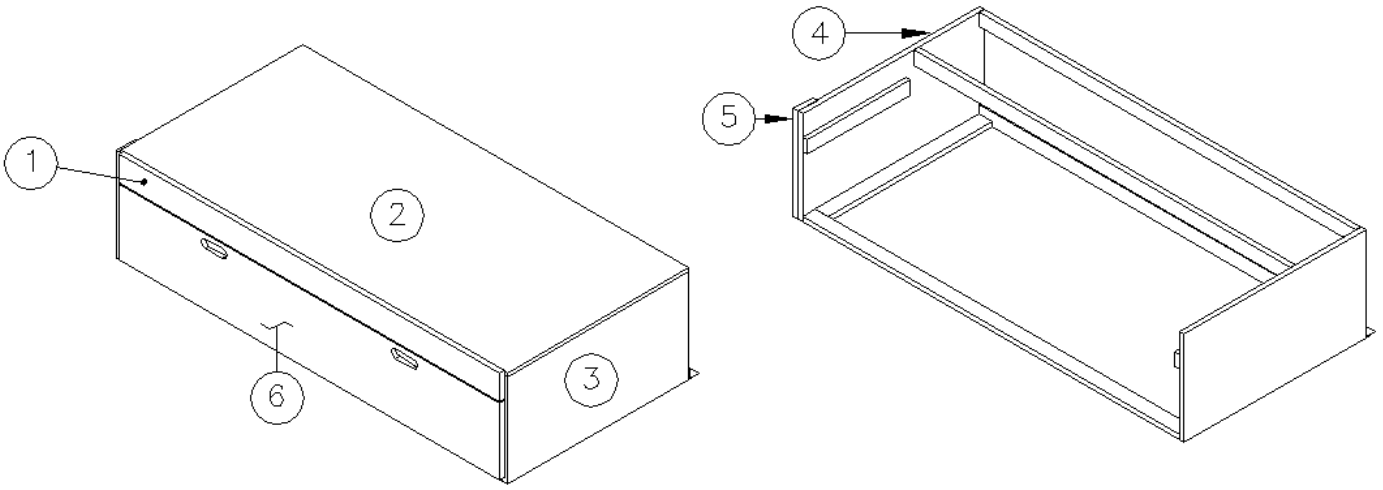

	966970-15	Sofa Assembly
1.	966971-15	Sofa bed
2.	966970-152	Panel, 60 x 28.25
3.	966970-153	Panel, 14.5 x 28.25
4.	966970-154	Panel, 14.5 x 28.25
5.	966970-155	Panel, 14.5 x 3
6.	966970-156	Door, 10.25 x 59.13
	382115	Pull, Flat Black
	381607-11	Hinge, Self-close
	381228-02	Catch, Grabber door (5lb Pull)
	114809	Aluminum angle 1.5 x 1.5

2018 INTERNATIONAL
FURNITURE, LOUNGE

Sofa, Armrest, 28’, 30’

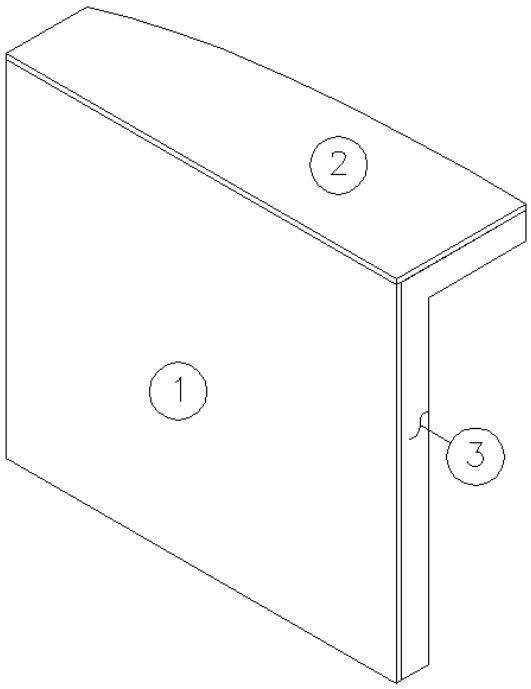

	966974	Sofa Armrest Assembly
1.	966974-1	Panel, 25.63 x 29
2.	966974-2	Panel, 9.63 x 29
3.	966974-3	Panel, 9.25 x 2
	700414	Foam, 3/8”

2018 INTERNATIONAL
FURNITURE, LOUNGE

Sofa, L-Section, 28’ Signature

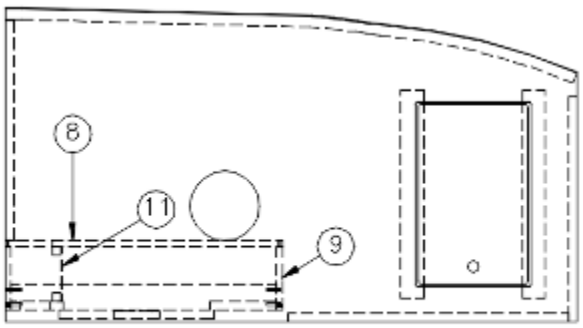

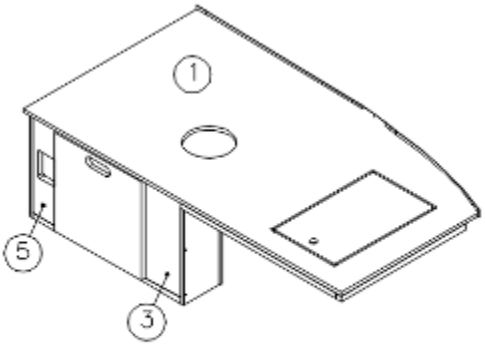

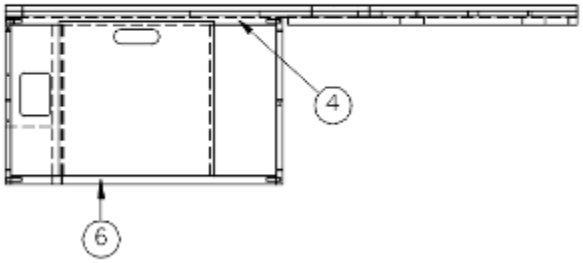

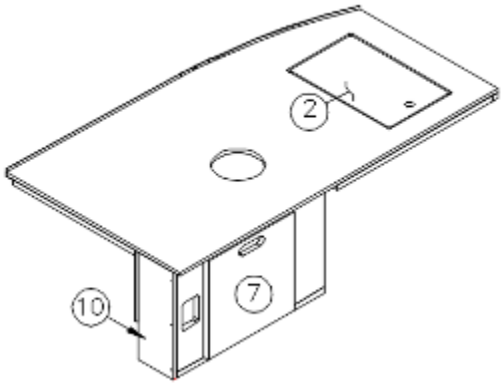

	968214	L-Section Sofa Assembly
1.	968214-1	Panel, 26.5 x 49.5
2.	968214-2	Panel, 9.5 x 15.5
3.	968214-3	Panel, 13 x 5.75
4.	968214-4	Panel, 2.25 x 23
5.	968214-10	Panel, 13 x 4.5
6.	968214-11	Panel, 2.25 x 23
7.	968214-12	Panel, 13.31 x 13.38
8.	968214-13	Panel, 14.5 x 24
9.	968214-14	Panel, 5.5 x 14.5
10.	968214-15I	Panel, 5.5 x 14.5
11.	968214-16	Panel, 4.75 x 13.75
	114812	Aluminum angle, 1 x 1
	365364-01	Edgebanding, 5/8”, Ebony Woods
	365364-02	Edgebanding, 15/16”, Ebony Woods
	381607-11	Hinge, Self-close
	382029-05	Handle bar, 21.33”
	381228-02	Catch, Grabber door

2018 INTERNATIONAL
FURNITURE, LOUNGE

Sofa, L-Section, 28’ Serenity

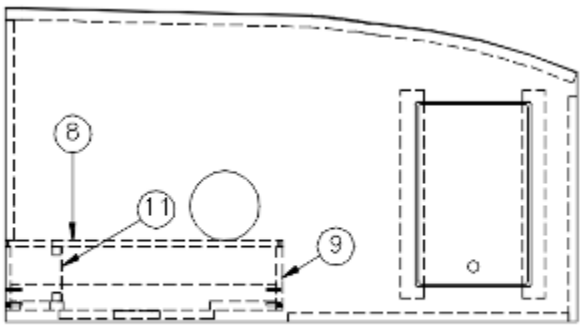

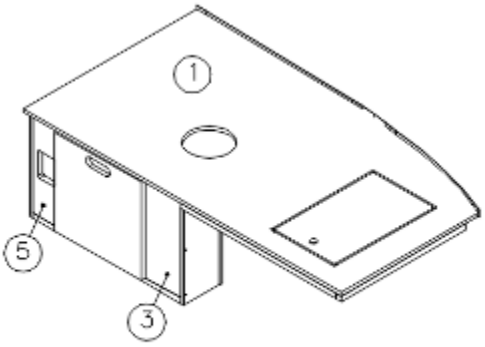

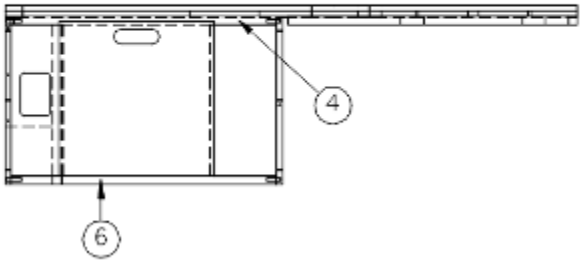

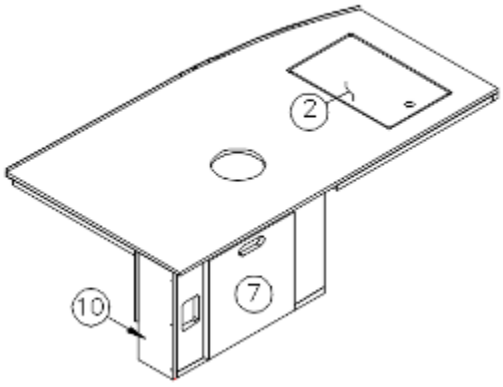

	968214-15	L-Section Sofa Assembly
1.	968214-1	Panel, 26.5 x 49.5
2.	968214-2	Panel, 9.5 x 15.5
3.	968214-153	Panel, 13 x 5.75
4.	968214-154	Panel, 2.25 x 23
5.	968214-1510	Panel, 13 x 4.5
6.	968214-11	Panel, 2.25 x 23
7.	968214-1512	Panel, 13.31 x 13.38
8.	968214-13	Panel, 14.5 x 24
9.	968214-14	Panel, 5.5 x 14.5
10.	968214-15I	Panel, 5.5 x 14.5
11.	968214-16	Panel, 4.75 x 13.75
	114812	Aluminum angle, 1 x 1
	365344-01	Edgebanding, .63”, Pearl Bisque
	365344-02	Edgebanding, .94”, Pearl Bisque
	381607-11	Hinge, Self-close
	382115	Pull, Flat Black
	381228-02	Catch, Grabber door

2018 INTERNATIONAL
FURNITURE, LOUNGE

Sofa, Back, 28’

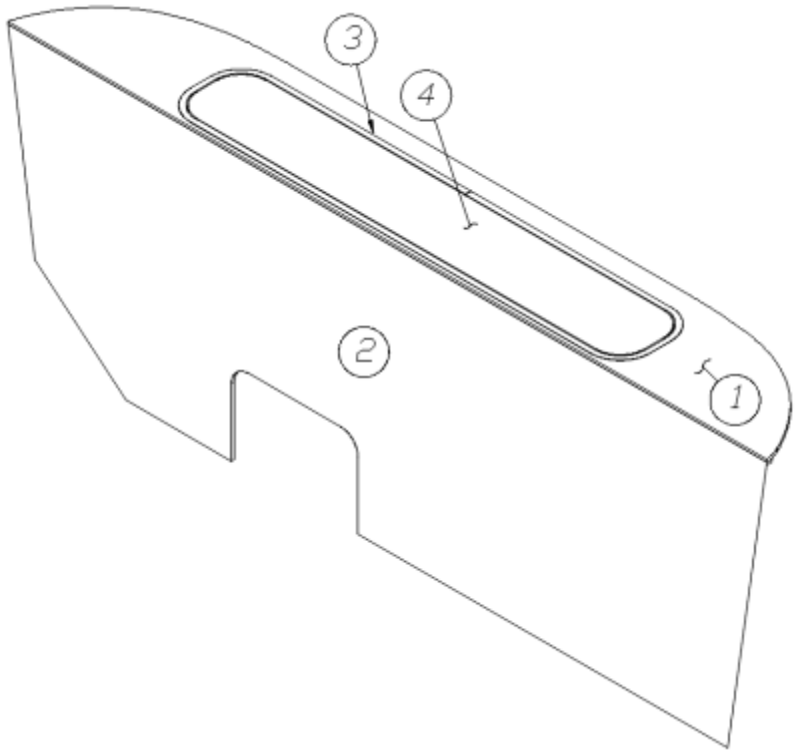

	966973	Sofa Back Assembly
1.	966973-1	Panel, 12.25 x 90.06
2.	966973-2	Panel, 31.63 x 90.06
3.	115203	Door jamb
4.	966134	Door, Sofa back
	381847-01	Piano hinge
	203622	Storage tub
	700414	Foam, 3/8”

Sofa, L-Lounge Armrest, 28’

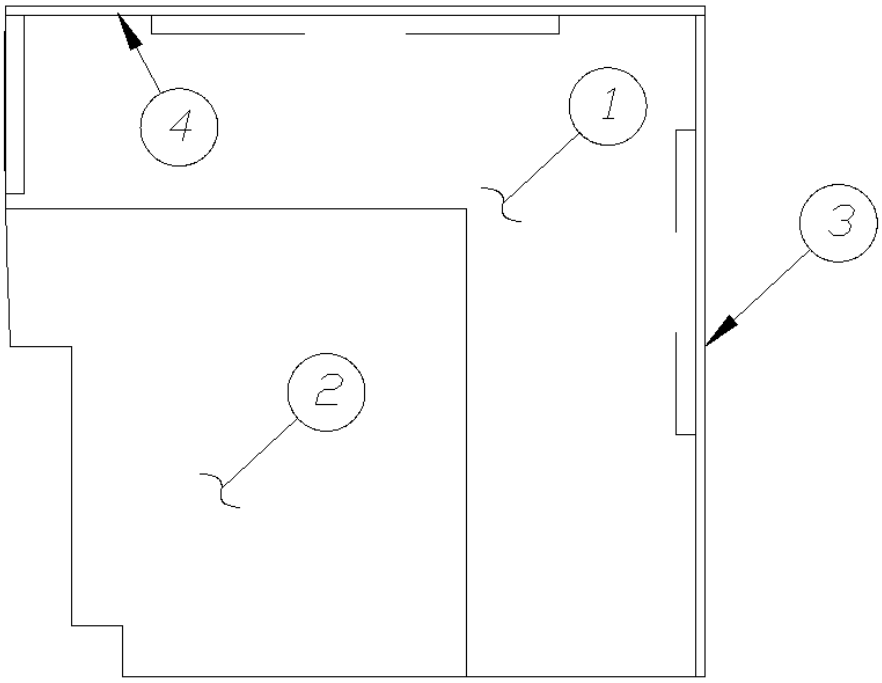

	967230	L-Lounge Armrest Assembly
1.	967230-1	Panel, 27.19 x 26
2.	967230-2	Panel, 27.19 x 26
3.	967230-3	Panel, 2 x 26
4.	967230-4	Panel, 2 x 27.5
	700414	Foam, 3/8”

2018 INTERNATIONAL
FURNITURE, LOUNGE

Sofa, L-Section, 30’ Signature

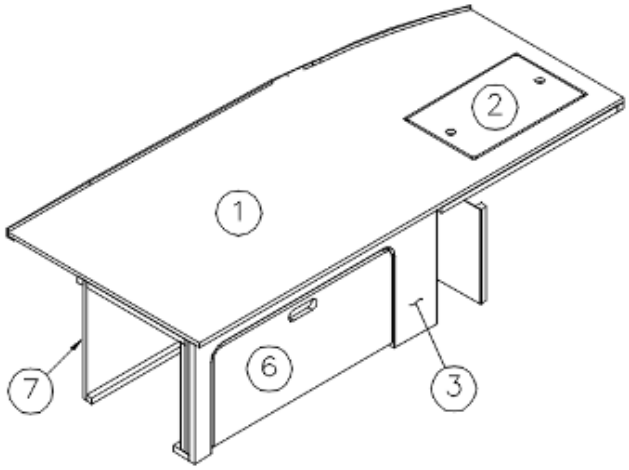

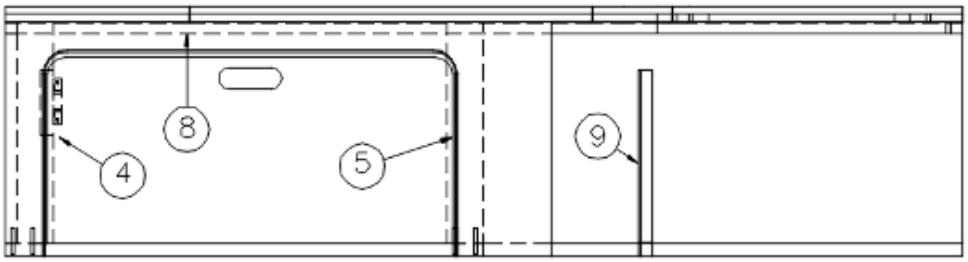

	967621	L-Section Sofa Assembly
	967621-01	L-Section Sofa Assembly, Inverter Option
1.	967621-1	Panel, 27 x 59.5
2.	967621-2	Panel, 9.5 x 15.5
3.	967621-3	Panel, 14.5 x 34
4.	967621-4	Panel, 3 x 13.75
5.	967621-6	Panel, 2.25 x 13.75
6.	967621-7	Door, 11.56 x 25.13
7.	967621-8	Panel, 14.5 x 59.5
8.	967621-10	Panel, 2.25 x 29.75
9.	967621-21	Panel, 11.5 x 16, Inverter option
	114812	Aluminum angle, 1 x 1
	381228-02	Catch, Grabber door (5lb Pull)
	381775	Drawer pull, Flush Satin
	381072-01	Hinge, 3" x 2", Fixed pin
	365364-01	Edgebanding, .63", Ebony Woods
	365364-02	Edgebanding, .94", Ebony Woods
	203440	T-molding, Black embossed
	112671-08	Vinyl, Under Bed Storage

2018 INTERNATIONAL
FURNITURE, LOUNGE

Sofa, L-Section, 30’ Serenity

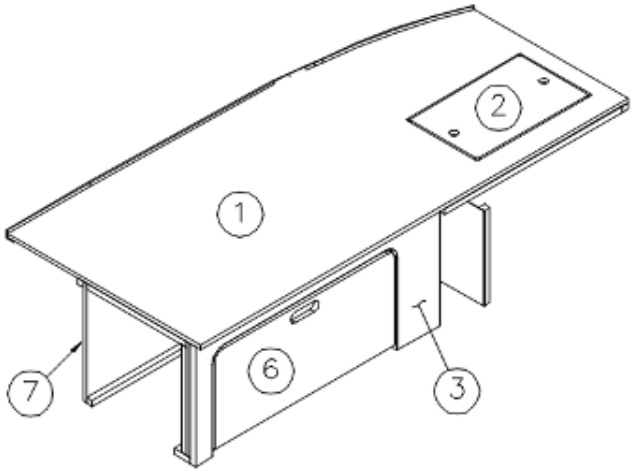

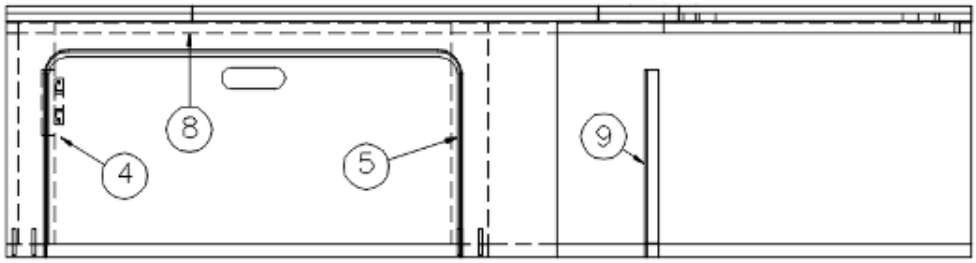

	967621-15	L-Section Sofa Assembly
	967621-0115	L-Section Sofa Assembly, Inverter Option
1.	967621-1	Panel, 27 x 59.5
2.	967621-2	Panel, 9.5 x 15.5
3.	967621-153	Panel, 14.5 x 34
4.	967621-154	Panel, 3 x 13.75
5.	967621-156	Panel, 2.25 x 13.75
6.	967621-157	Door, 11.56 x 25.13
7.	967621-8	Panel, 14.5 x 59.5
8.	967621-10	Panel, 2.25 x 29.75
9.	967621-21	Panel, 11.5 x 16, Inverter option
	114812	Aluminum angle, 1 x 1
	381228-02	Catch, Grabber door (5lb Pull)
	381775	Drawer pull, Flush Satin
	381072-01	Hinge, 3" x 2", Fixed pin
	365344-01	Edgebanding, .63", Pearl Bisque
	365344-02	Edgebanding, .94", Pearl Bisque
	203440	T-molding, Black embossed
	112671-08	Vinyl, Under Bed Storage

2018 INTERNATIONAL
FURNITURE, LOUNGE

Sofa, Back, 30’

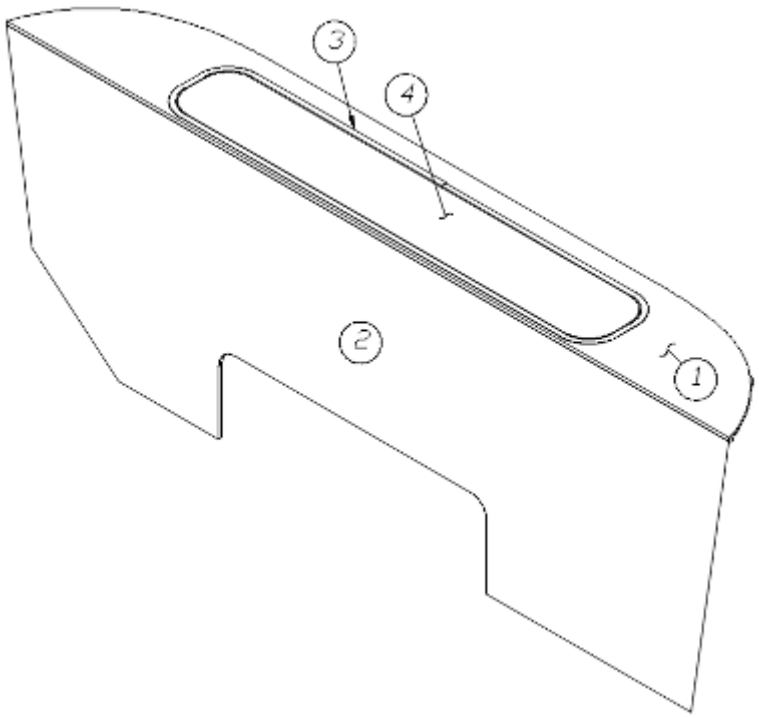

	967625	Sofa Back Assembly
1.	967625-1	Panel, 12.25 x 90.06
2.	967625-2	Panel, 31.63 x 90.06
3.	115203	Door jamb
4.	966134	Door, Sofa back
	381847-01	Piano hinge
	203622	Storage tub
	700414	Foam, 3/8”

Sofa, L-Lounge Armrest, 30’

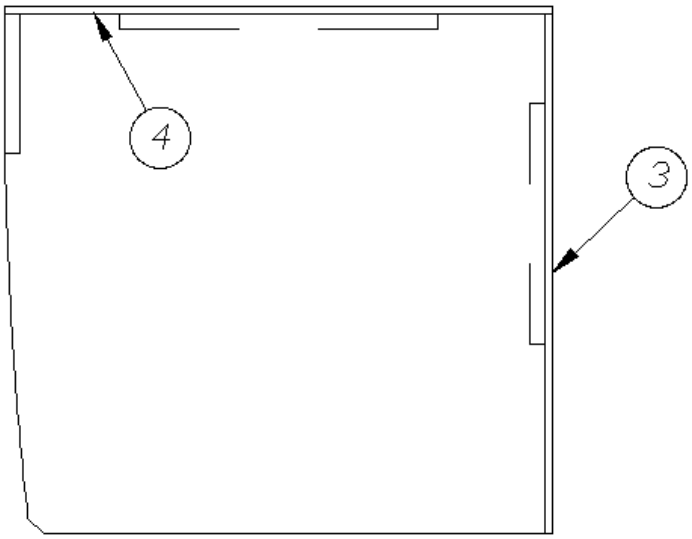

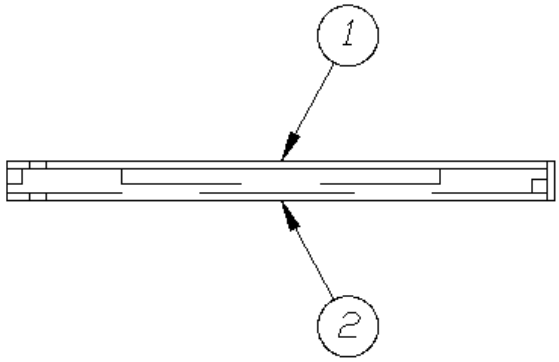

	967623	L-Lounge Armrest Assembly
1.	967623-1	Panel, 27.16 x 26
2.	967623-2	Panel, 27.16 x 26
3.	967623-3	Panel, 2 x 26
4.	967623-4	Panel, 2 x 27.5
	700414	Foam, 3/8”

2018 INTERNATIONAL
FURNITURE, LOUNGE

Sofa Bed, 23CB, 25FB, 27FB Signature

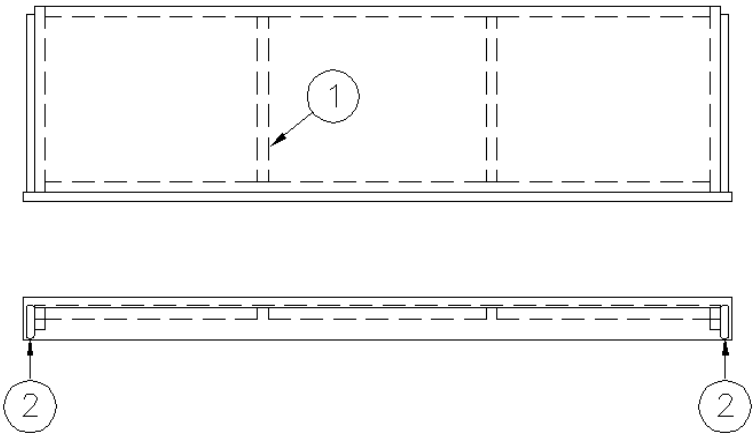

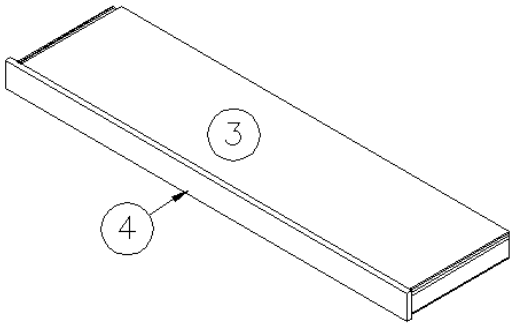

966888 Sofa Bed

1. 915811 Sofa bed weldment
2. 381826 Slide, Ball bearing, 16"
3. 966888-3 Panel, 17 x 63
4. 966888-4 Panel, 3.88 x 65.13

Sofa Bed 23CB, 25FB, 27FB Serenity

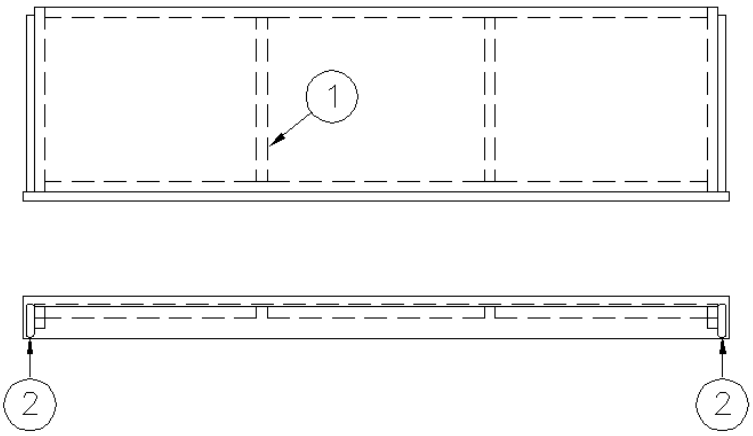

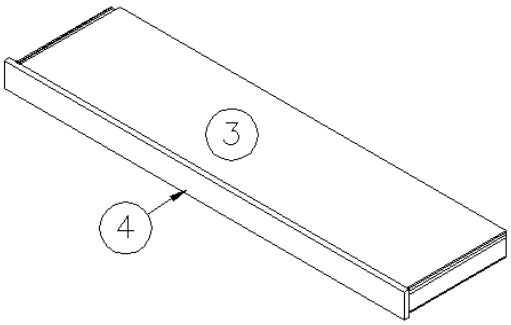

966888-15 Sofa Bed

1. 915811 Sofa bed weldment
2. 381826 Slide, Ball bearing, 16"
3. 966888-3 Panel, 17 x 63
4. 966888-154 Panel, 3.88 x 65.13

Sofa Bed, 28', 30' Signature

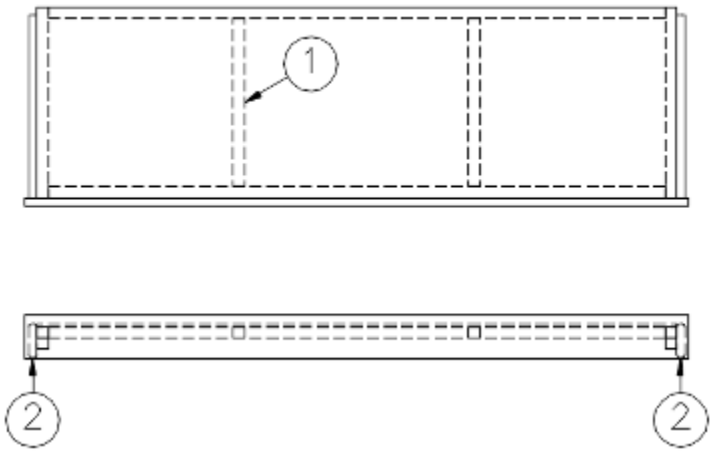

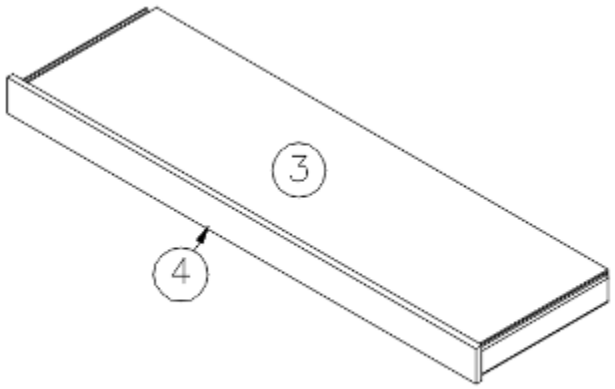

966971 Sofa Bed

1.	915708	Sofa bed weldment
2.	381826	Slide, Ball bearing, 16"
3.	966971-3	Panel, 17 x 57
4.	966971-4	Panel, 3.88 x 59.13

Sofa Bed, 28', 30' Serenity

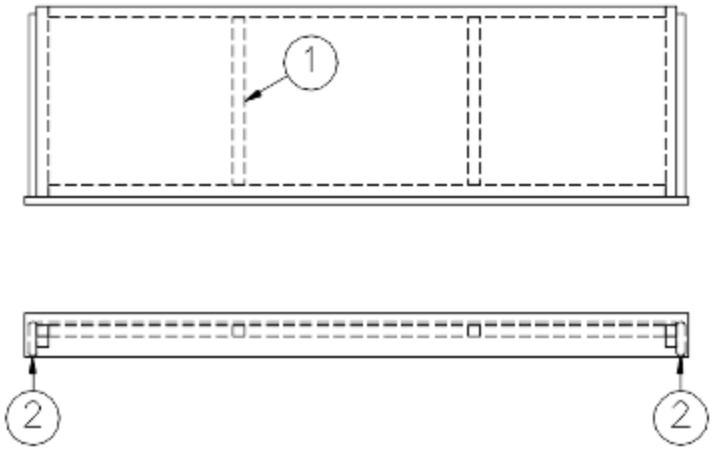

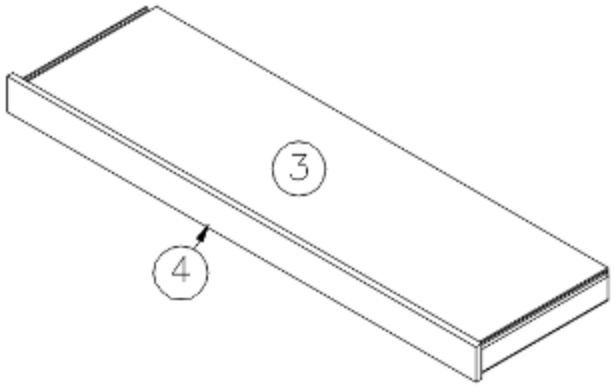

966971-15 Sofa Bed

1.	915708	Sofa Bed Weldment
2.	381826	Slide, Ball Bearing, 16"
3.	966971-3	Panel, 17 x 57
4.	966971-154	Panel, 3.88 x 59.13

Magazine Rack

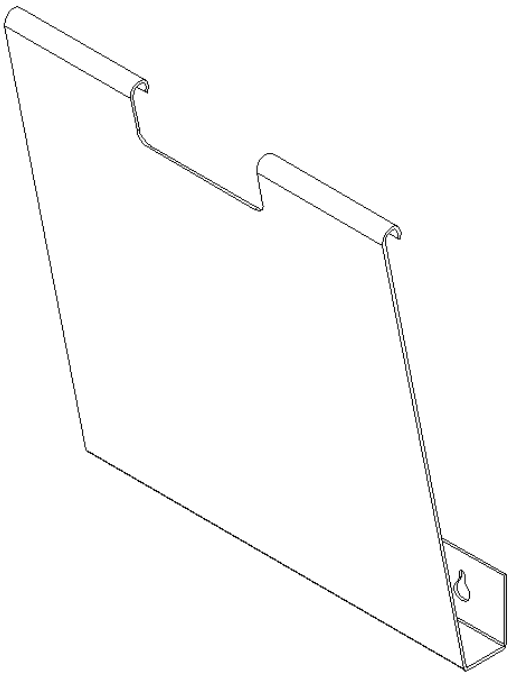

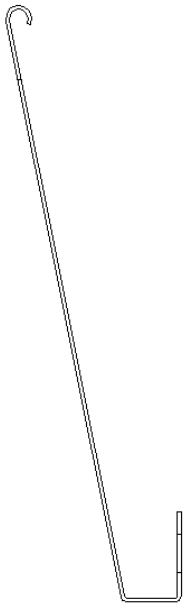

386106-01	Magazine rack, White
386107	Rod, Magazine rack

Camp Chair, 23FB A2GO

704033	Camp chair w/carrying bag & A2GO Logo

2018 INTERNATIONAL
HARDWARE

Main Door Lock, Left Hand Hinge

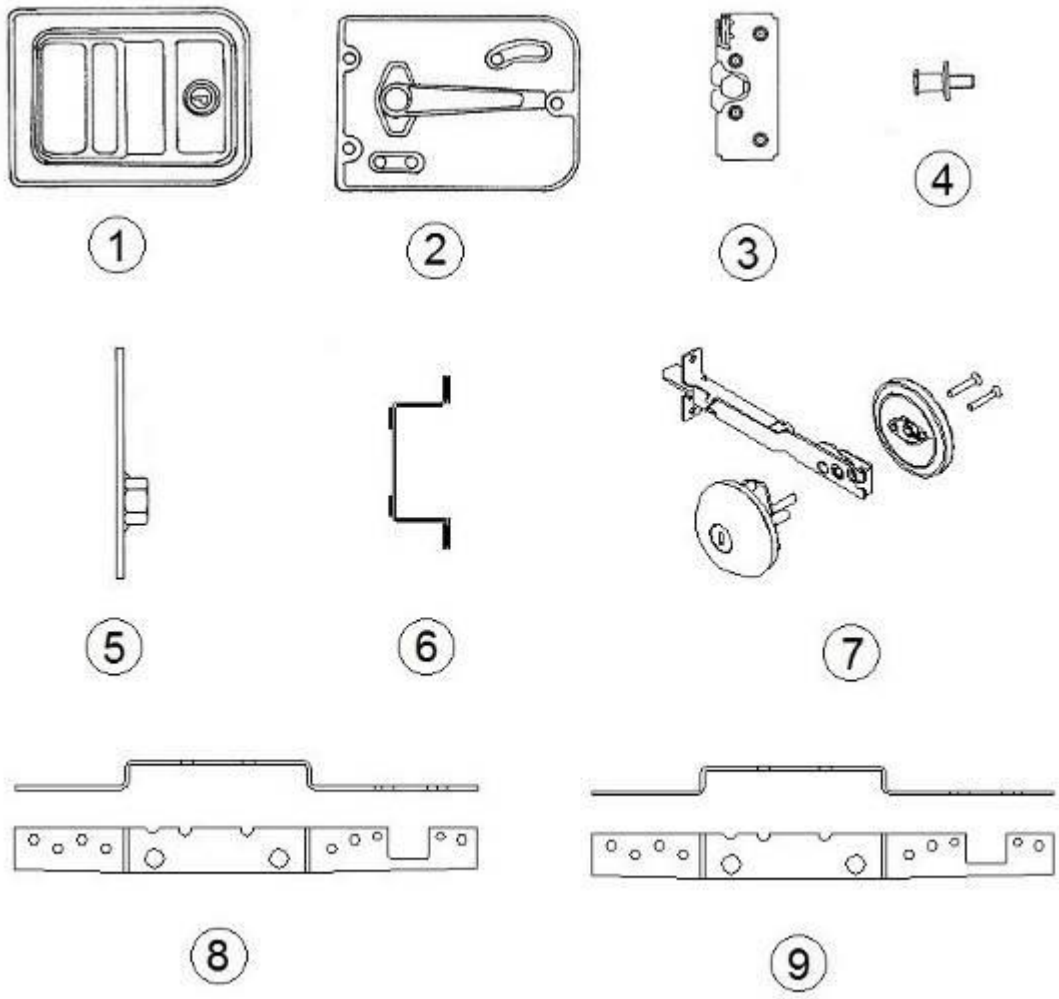

1.	381547-01	Main door lock, Outside housing
2.	381547-07	Main door lock, Inside plate
3.	381547-03	Double rotary latch, Main door
4.	381547-04	Striker bolt w/washer, Main door lock
5.	381550	Plate, Striker bolt mounting
6.	115413	Door hat section
7.	382069	Deadbolt, Round, Trimark
8.	382067	Outer reinforcement plate, RH/LH hinged door
9.	382066	Inner reinforcement plate, LH hinged door
	382069-100	Deadbolt key, Blank
	381547-102	Main door key, Blank
	381547-08	Screw package, Main door lock
	385595	Pocket strike
	382122	Key chain, Airstream logo

2018 INTERNATIONAL
HARDWARE

Main Door Lock, Right Hand Hinge

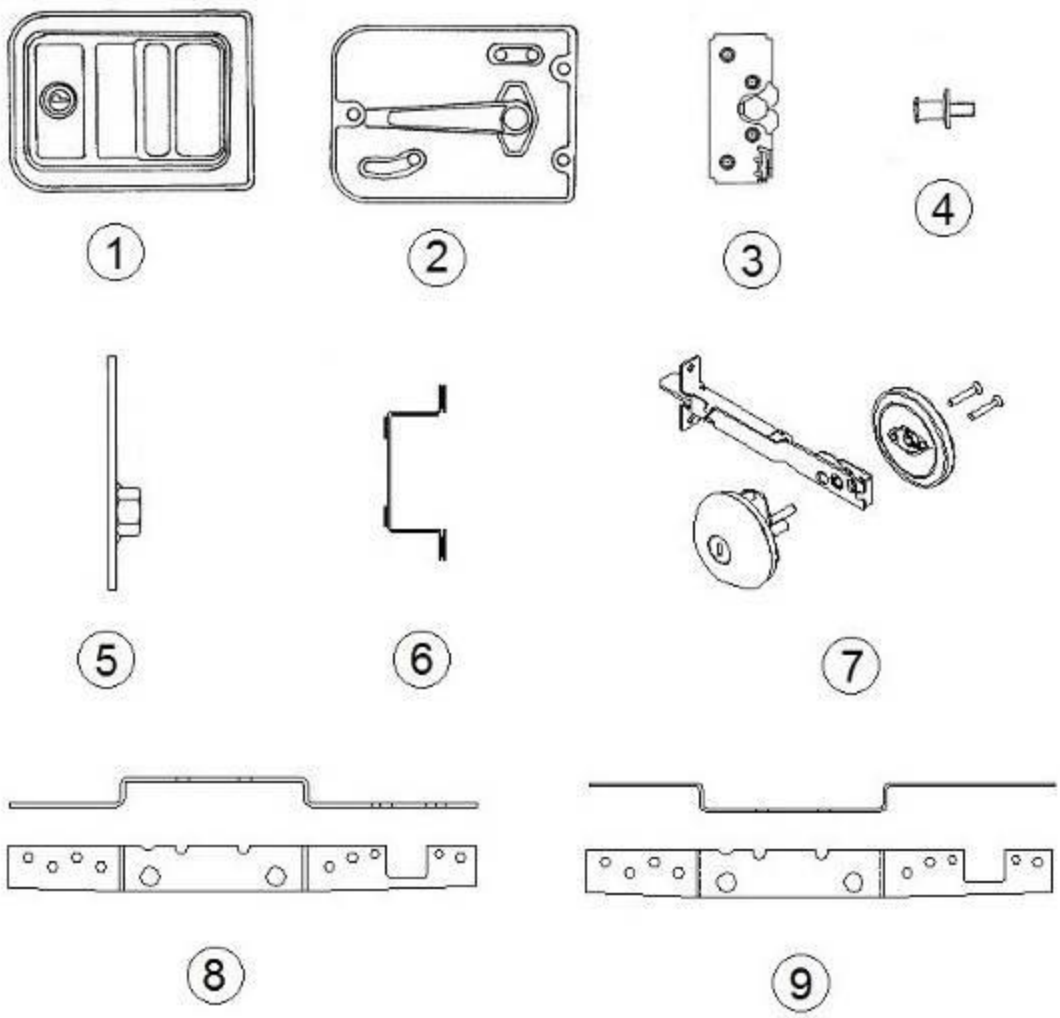

1.	381547-09	Main door lock, Outside housing
2.	381547-11	Main door lock, Inside plate
3.	381547-10	Double rotary latch, Main door lock
4.	381547-04	Striker bolt w/washer, Main door lock
5.	381550	Plate, Striker bolt
6.	115413	Door hat section
7.	382069	Deadbolt, Round, Trimark
8.	382067	Outer reinforcement plate, RH/LH hinged door
9.	382068	Inner reinforcement plate, RH hinged door
	382069-100	Deadbolt key, Blank
	381547-102	Main door key, Blank
	381547-08	Screw package, Main door lock
	385595	Pocket strike
	382122	Key chain, Airstream logo

Window Hardware

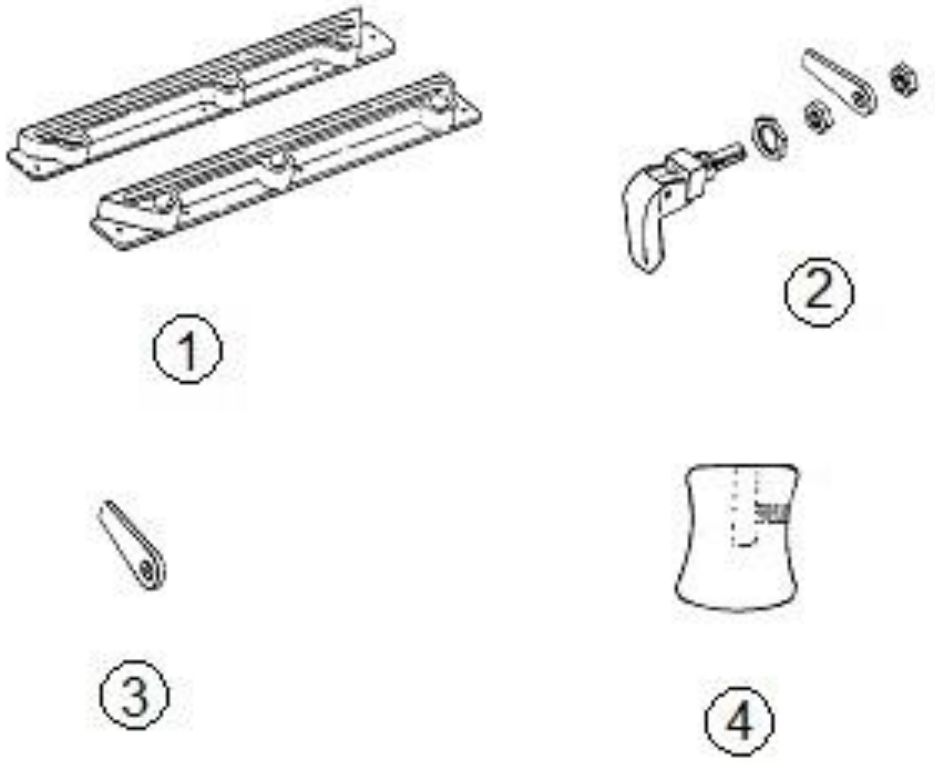

1.	382360	Window guide, RH
	382359	Window guide, LH
2.	382367-01	Lower window latch, Chrome
	195467-05	Lower window latch, Red
3.	115776	Lock paw, Window latch assembly
4.	380230-03	Knob, Window arm, Silver
	380230-04	Knob, Window arm, Red
	1101-0011	Bracket, LH window striker
	1101-0012	Bracket, RH window striker

2018 INTERNATIONAL
HARDWARE

Exterior Latches, Locks, and Handles

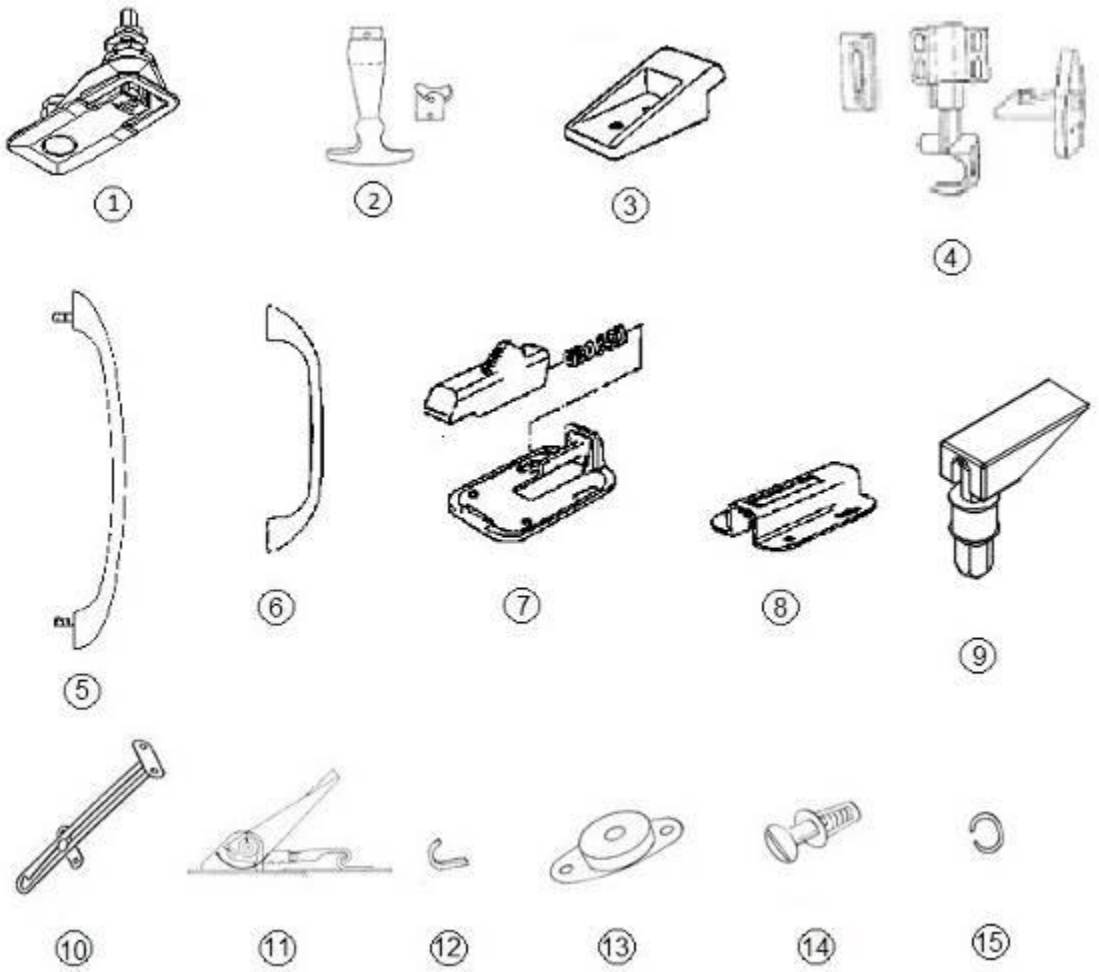

1.	382230-02	Compression latch w/key code
2.	381021-01	Rubber T-handle
3.	201056	Catch, main door hold-back
4.	381454	Latch, Screen door, Bullet
5.	101171	Grab handle
6.	380004	Handle, Screen door
7.	380291	Main door hold-back
8.	380290	Latch housing
9.	382456	Swell latch
10.	380024	Support arm, Bumper lid
11.	382091-01	Tension latch, Stainless Steel
12.	382091-02	Strike, Tension latch, Stainless Steel
13.	685359	Rubber receptacle, 1/4 turn latch, Southco
14.	685358	Stud, 1/4 turn latch, Southco
15.	685362	Retaining ring, 1/4 turn stud
	382074	Gasket, Main door grab handle

2018 INTERNATIONAL
HARDWARE

Head knocker and Rubber Bumpers

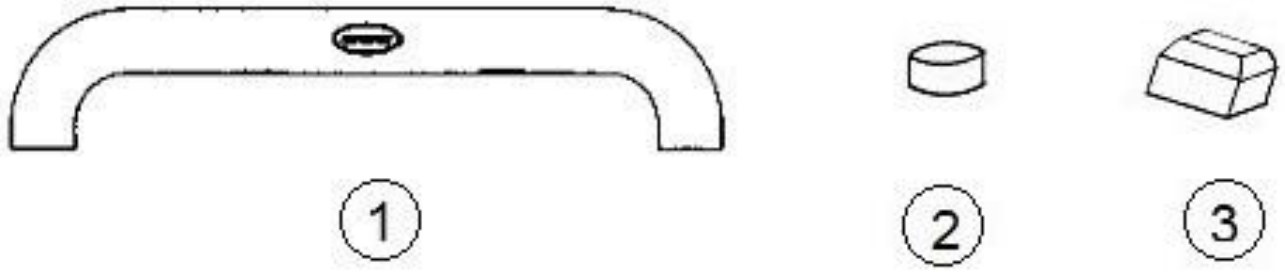

1.	382194	Head knocker, White
2.	360012-01	Rubber bumper, Brown
3.	360016	Rubber bump-on, Square, Gray
	381610-01	Cover cap, Plastic, European White
	381610-04	Cover cap, Plastic, Black

Exterior Hinges

381552-03	Hinge, Main door, Upper
381552-04	Hinge, Main door, Lower
381531-01	Hinge, Screen door, Upper
381531-02	Hinge, Screen door, Lower
380773	Hinge, Exterior access door, Gas tank cover
380203-01	Piano hinge, 1/8” Pin, Battery box lid
380203-02	Piano hinge, Hose carrier lid, 72", Black
380988	Hinge, Continuous, Refrigerator access door

2018 INTERNATIONAL
HARDWARE

Interior Latches and Handles

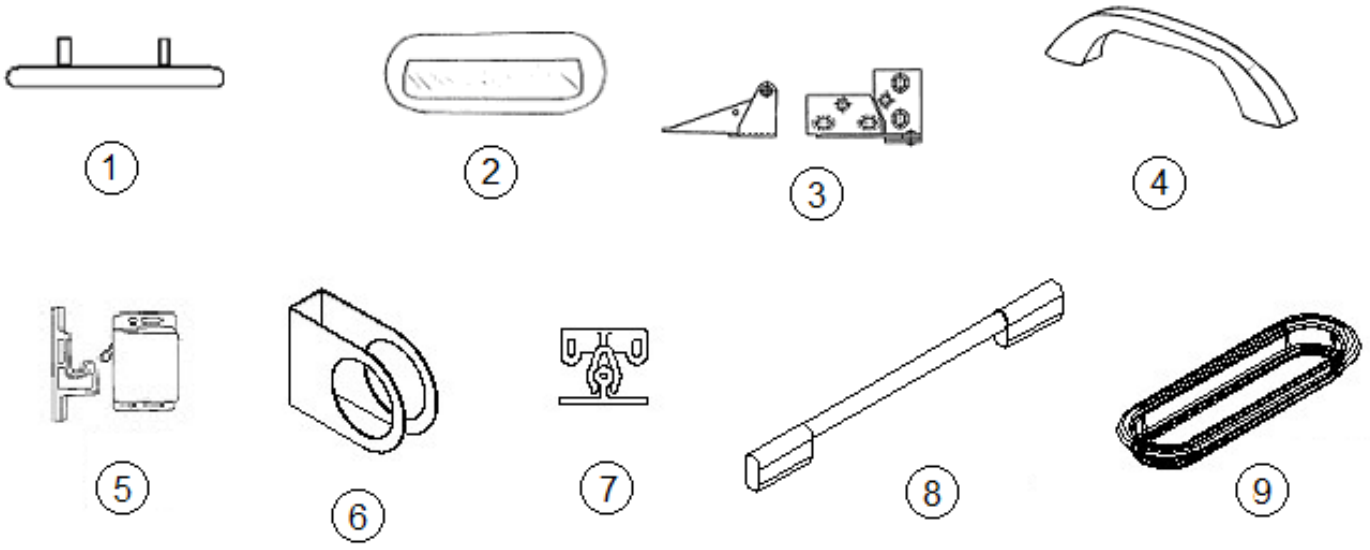

1.	382044	Handle, Drawer/door, Chrome
2.	381775	Pull handle, Chrome
3.	382159	Pivot hinge, Nickel
4.	381737-02	Grab bar, Interior, Black
5.	381228	Catch, grabber door, 10lb
	381228-02	Catch, grabber door, 5LB
6.	454320	Door handle cover
7.	381948	K-catch
8.	382029-00	Handle, Chrome
9.	382030	Pull, Recessed finger
	381771	Latch, Lever lockset, Privacy
	382034	Latch, Flush mount, Corner bath doors
	385940-02	Mirror pull, Chrome

Interior Hinges

382159	Pivot hinge, Nickel
380203-01	Piano hinge
380203-02	Piano hinge, Black
380988	Hinge, Continuous
380773	Hinge, Access door
381607-10	Hinge, Self-close, 110° half overlay
381607-11	Hinge, Self-close, 110° overlay

2018 INTERNATIONAL
HARDWARE

Bathroom Accessories

382550	Towel bar
382551	Towel ring
381778	Robe hook, Chrome
381299	Recessed toilet paper holder
380034	Toilet paper holder, Chrome
967110	Closeout toilet paper holder, 23CB
601829	Trim kit, Shower, Chateau, Chrome
601358	Shower hardware, Chrome
600594	Strainer w/white rubber stopper

Clothes Line

382063	Retractable clothes line

Dinette Table Hardware

380284-02	Bracket, Table hinge assembly kit
380284-03	Table hinge brackets
382177	Leg, Folding

Bed Gas Springs

381067-09	Spring, Gas 90 LBS
382463	Bracket, Upper
382462	Bracket, Lower
381084	Ball, Stud

Key Hooks

382152	Hook, Hammock, Stainless

2018 INTERNATIONAL
HARDWARE

Awning Hardware

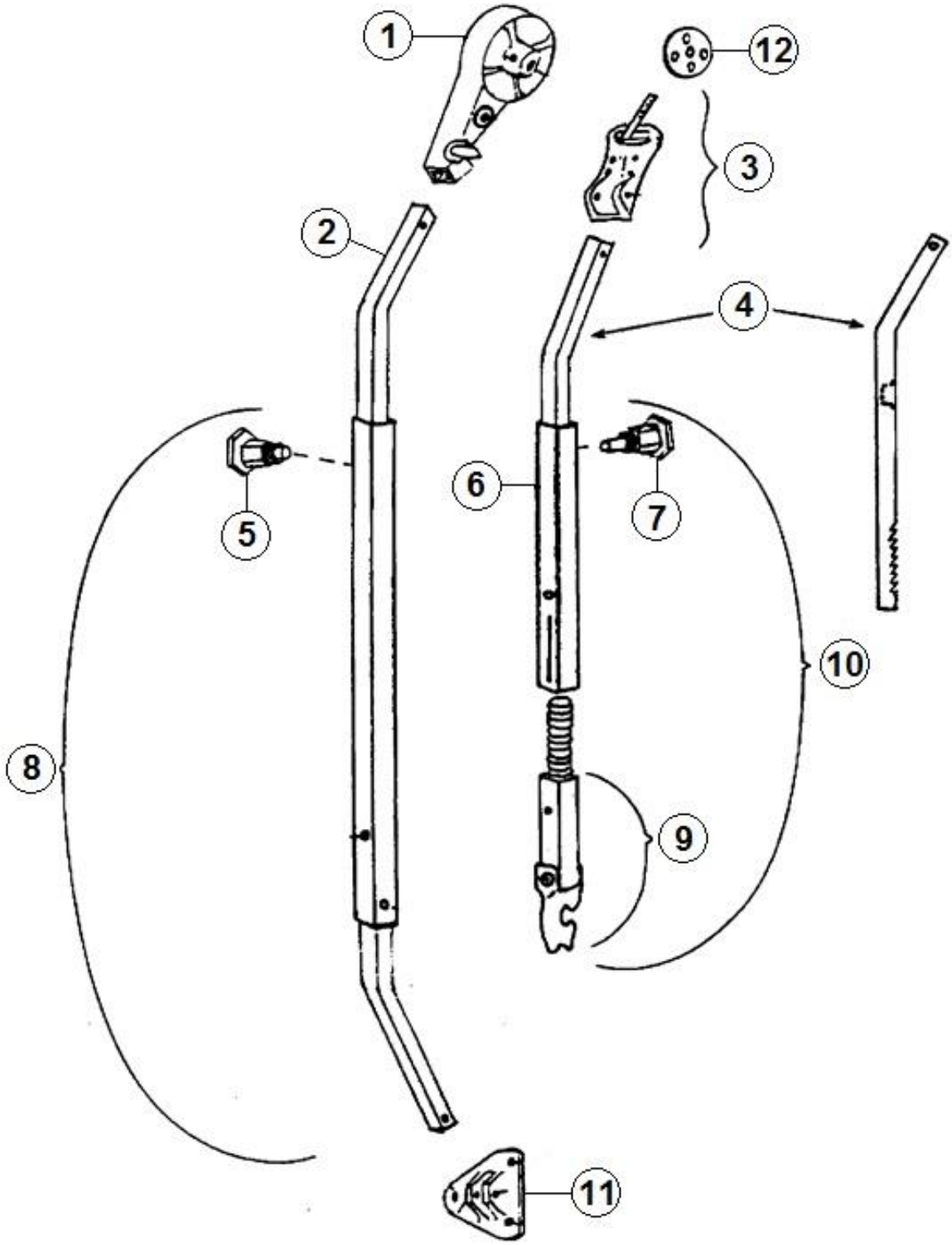

Parts Listed on Next Page

Awning Hardware

	702993	Awning Hardware
1.	74043W-06	Front head
	74043W-07	Rear head
2.	74047W-11	Front main arm bar
	74047W-12	Rear main arm bar
3.	74056W	Clamp, Front, Curved
	74056W-01	Clamp, Rear, Curved
4.	74061WS-08	Rafter arm bar, Satin
5.	74054W	Snap stud
6.	74063W-04	Rafter arm tube, Satin
7.	74072W	Ratchet stud
8.	74048WS-15	Front main arm tube
	74048WS-16	Rear main arm tube
9.	74068W-04	Claw bar
10.	74048WS-17	Rafter arm
11.	74055W	Base hinge, Rib mount
12.	74060W	Clamp wheel
	74041W-01	Zip Dee hook, Pull rod, 52”

2018 INTERNATIONAL
HARDWARE

Rivets

325000	Rivet, 1/8 x 1/4, Solid Braizer head
325000-01	Rivet, 1/8 x 1/4, Anodized Clear
325001-01	Rivet, 1/8 x 5/16, Anodized Clear
325001-03	Rivet, 1/8 x 5/16, Polar White
325002-01	Rivet, 1/8 x 3/8, Anodized Clear
325002-03	Rivet, 1/8 x 3/8, Polar White
325003	Rivet, 1/8 x 7/16, Solid Braizer head
325003-03	Rivet, 1/8 x 7/16, Polar White
325004-01	Rivet, 1/8 x 1/2, Anodized Clear
325043	Rivet, 1/8 x 1/4 length (hard)
325103-01	Rivet, Pop, 3/16, Anodized Clear
330016-08	Rivet, Pop, Closed end, Sealing
330038	Rivet, Blind, AD54ABS-LF
330152	Rivet, 1/8, Aluminum w/Steel mandrel
330155	Rivet, .125, Aluminum w/Stainless Steel mandrel
330127-03	Rivet, 1/8, AD43ABS
330127-05	Rivet, 1/8, AD45ABS
330127-08	Rivet, 1/8, AD48ABS
330126-02	Rivet, Pop, SSD43SSBS
330126-03	Rivet, Pop, SSD44SSBS
330126-04	Rivet, Pop, SSD45SSBS
330128-05	Rivet, 1/8, AD45ABS
330128-08	Rivet, 1/8, AD48ABS

Screws

345582	Screw, M4 x 14, PH, SS, TV bracket
345468-01	Screw, #12 x .625, PH, Black, TV bracket
320177	Screw, #8 x 1, Hex washer head, TV bracket
320116-06	Screw, #8 x 1, PH, Black
345558	Screw, #8-32 x .5, PH, Black, Windows
345511	Screw, M5 x 20mm, Flange HD, Vibration resistant
345473	Screw, #6 x .75, Self-drilling, Taillights
345073-08	Screw, .25-20 x 1.375, Phil, Wafer HD, Floor
320159	Screw, M6 x 45mm, Self-drilling w/wings, Floor
345326-06	Screw, Tapping, #10 SST. PPH. 1.25”, Awning hardware
345084	Screw, .25-14 x 1 thread cutting, solar panel install
381607-04	Screw, Hinge

Detectors and Fire Extinguishers

510781	Smoke detector
512539-01	LP detector
512783	Carbon Monoxide detector
600162-01	Fire extinguisher
600162-02	Fire extinguisher, CSA
203387	Pocket, Recessed fire extinguisher bracket

Labels and Tags, USA

386119	Label, “Don’t Use Area for Storage”
386118	Label, LP Gas Warning/Fill
385517	Label, Kill Switch Warning
385521	Label, Emergency Egress Window
386122	Warning Label, Cooking Appliance
385465	Exit Label, English
385560	Label, Air Conditioner Rating
385812	Label, Calif. Hazardous Substance
386120	Label, Smoke Detector
385359	Label, Microwave or Air Conditioner
385837	Label, Refrigerator Ignition
386012	Label Warning, Water Heater
386123	Label "Potable Water Only"
386114	Label, Rvia Silver
385062	Decal, 110-125 Voltage AC
385565	Label, Holding Tank Flushing
386142	Check Wheel Lug Label
386019	Label, 1 Amp Fuse Max
385101	Tag, Aux Tank Dump Valve Handle
385099	Tag, Main Tank Dump Valve Handle
386192	Hang, Tag, Smoke/Co Detector Battery
386193	Label, Wheel Torque Warning
385020	Sticker, Self-Adhering, “Jack”
386098	Label, Fuse, 12V.
386226	Label, RV Master Weight Label
386110	Label, Ok To Ship Inspected
386121	Label, “If You Smell Gas”
386257	Label, Cable & Satellite Inlet
386263	Hang Tag, Coach-Net Roadside Assistance
386267-01	Front Label, Power Awning Cable
386267-02	Rear Label, Power Awning Cable
386284	Warning label, “Do not use a dolly wheel”
386301	Warning label, Window Glass
386302	Label, Cooktop
386303	Warning label, Surface Cleaning

Labels and Tags, CSA

385949	Label, "Potable Water"
385950	Label, "Smoke Detector
385951	Label, "Range Fresh Air"
385952	Label, "LP Warning"
385953	Label, "If You Smell Gas"
385954	Label, "Range Warning"
385466	Label, Exit, French
386105	Label, TV/VCR Receptacle
385971	Label, Fuse, Exterior Light
386120	Label, Smoke Alarm Warning
386118	Label, LP Gas Tri-warning
386121	Label, "If You Smell Gas"
386122	Label, "Comfort Heating"

2018 INTERNATIONAL
PLUMBING, LPG SYSTEM

LPG System, 23CB

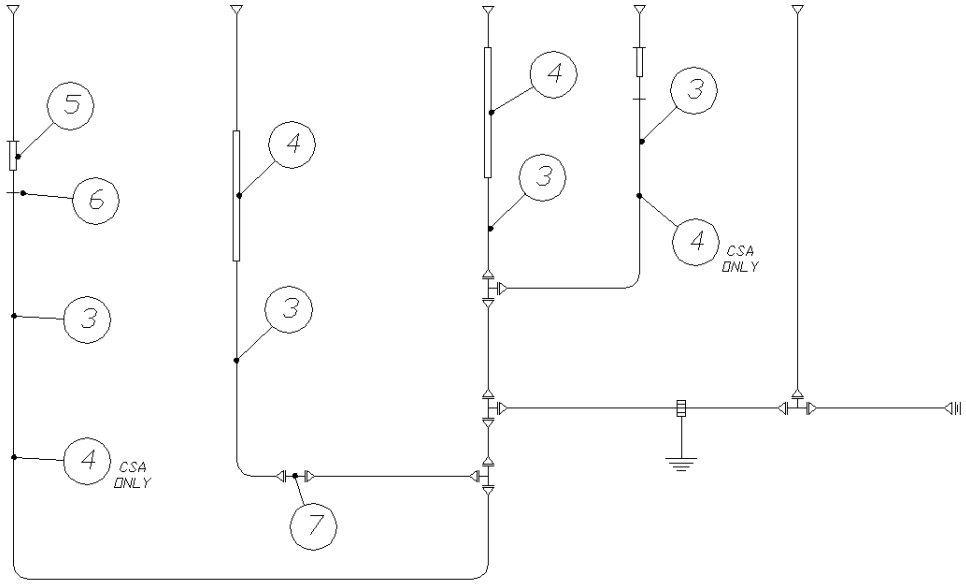

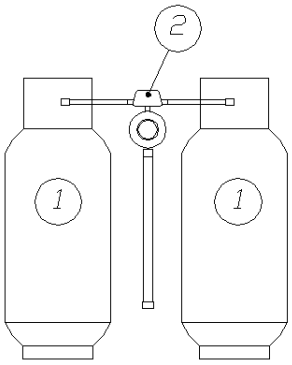

	943683	LPG System
1.	601710-01	LP cylinder, Steel
2.	602332-03	Cavanaugh gas regulator w/two 11” pigtails
3.	600008	Tubing, 3/8” OD, Copper
4.	601698-01	E-Pex tubing, ½”
5.	380887	Floor grommet
6.	380886	Underbelly grommet
7.	600238	Flare union, 3/8”
	602332-05	48” LP hose, 3/8” x ½” female flare
	340085-05	Clamp, 5/8” Dia
	600436	Forged flare nuts, 5/8”
	600435	Forged flare nuts, 3/8”
	381613	Plastisol cover, LP wing handle
	602314	Fitting, 5/8 flr x 5/8 flr union
	602312	Fitting, 5/8 flr x ½ flr, 90°
	601281	Tee, Brass union, 5/8 x 5/8 x 5/8

2018 INTERNATIONAL
PLUMBING, LPG SYSTEM

LPG System, 23FB

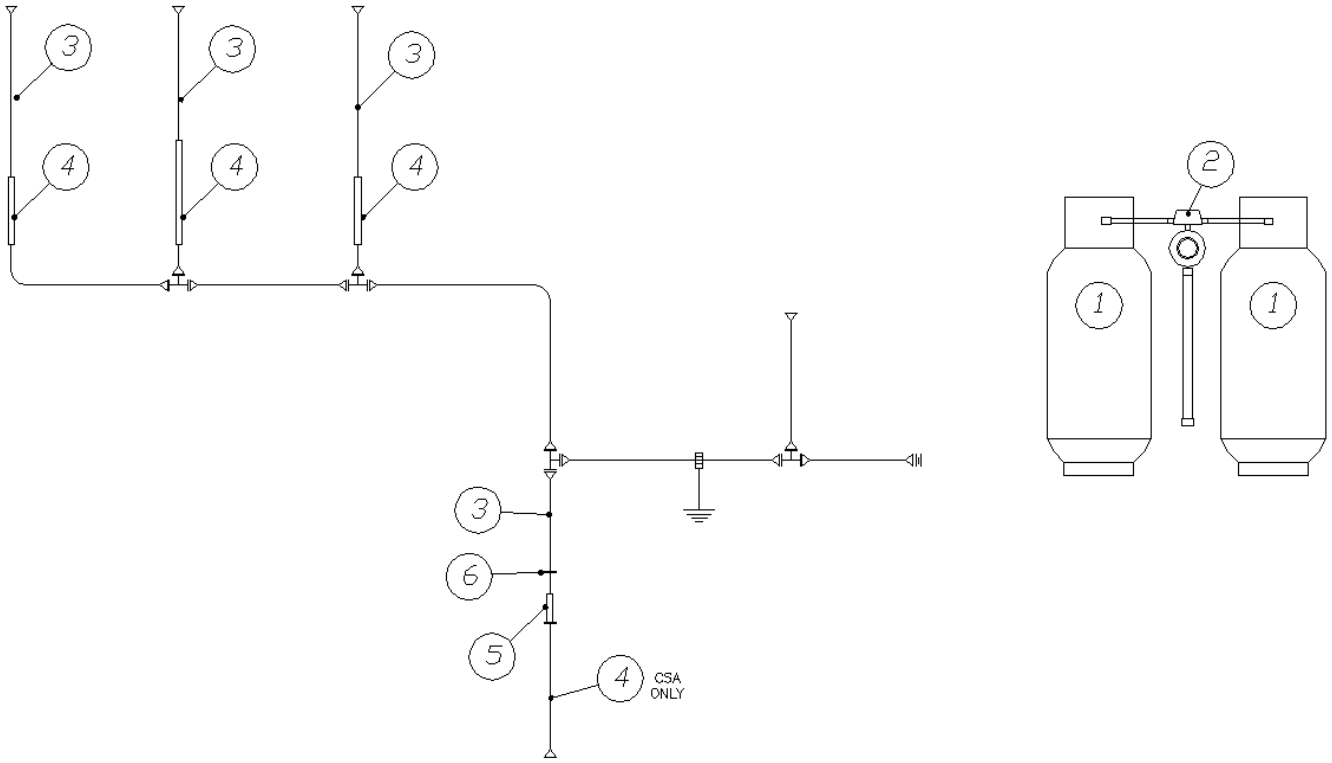

	943697	LPG System
1.	601710-01	LP cylinder, Steel
2.	602332-03	Cavanaugh gas regulator w/two 11” pigtails
3.	600008	Tubing, 3/8 OD, Copper
4.	601698-01	E-Pex tubing, ½”
5.	380887	Floor grommet
6.	380886	Underbelly grommet
	602332-05	48” LP hose, 3/8” x ½” female flare
	600435	Forged flare nuts, 3/8”
	340085-05	Clamp, 5/8” Dia
	381613	Plastisol cover, LP wing handle

2018 INTERNATIONAL
PLUMBING, LPG SYSTEM

LPG System, 25', 25FB

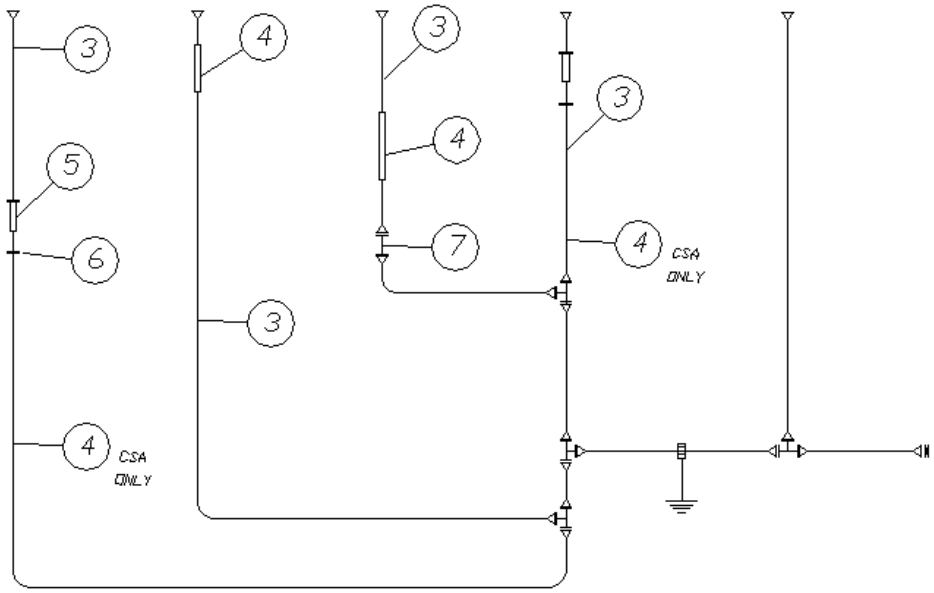

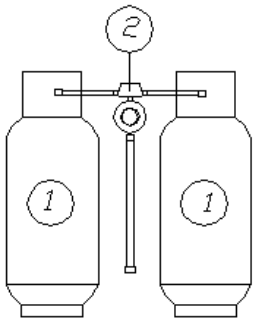

	943631	LPG System
1.	601710-01	LP cylinder, Steel
2.	602332-03	Cavanaugh gas regulator w/two 11" pigtails
3.	600008	Tubing, 3/8 OD, Copper
4.	601698-01	E-Pex tubing, ½"
5.	380887	Floor grommet
6.	380886	Underbelly grommet
7.	600238	Flare union, 3/8"
	381613	Plastisol cover, LP wing handle
	600004	Tubing, 5/8 OD, Copper
	600003	Tee, 5/8 x 3/8 x 3/8
	600436	Forged flare nuts, 5/8"
	602332-05	48" LP hose, 3/8" x ½" female flare
	500038	Lug ground
	340085-05	Clamp, 5/8" Dia
	601281	Tee, Brass union, 5/8 x 5/8 x 5/8

2018 INTERNATIONAL
PLUMBING, LPG SYSTEM

LPG System, 27FB

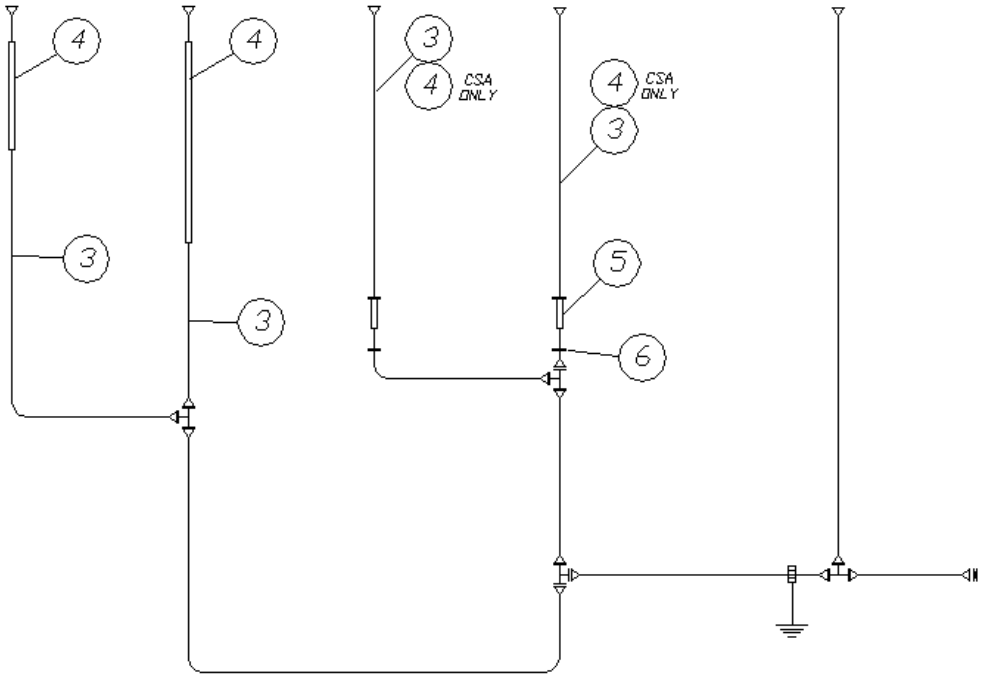

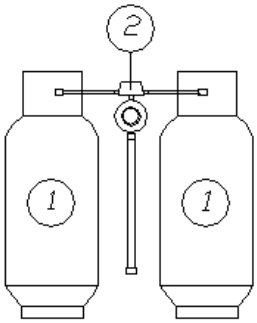

	943669	LPG System
1.	601710-01	LP cylinder, Steel
2.	602332-03	Cavanaugh gas regulator w/two 11” pigtails
3.	600008	Tubing, 3/8” OD, Copper
4.	601698-01	E-Pex tubing, ½”
5.	380887	Floor grommet
6.	380886	Underbelly grommet
	602332-05	48” LP hose, 3/8” x ½” female flare
	340085-05	Clamp, 5/8” Dia
	600238	Flare union, 3/8”
	600435	Forged flare nuts, 3/8”
	381613	Plastisol cover, LP wing handle

2018 INTERNATIONAL
PLUMBING, LPG SYSTEM

LPG System, 28’

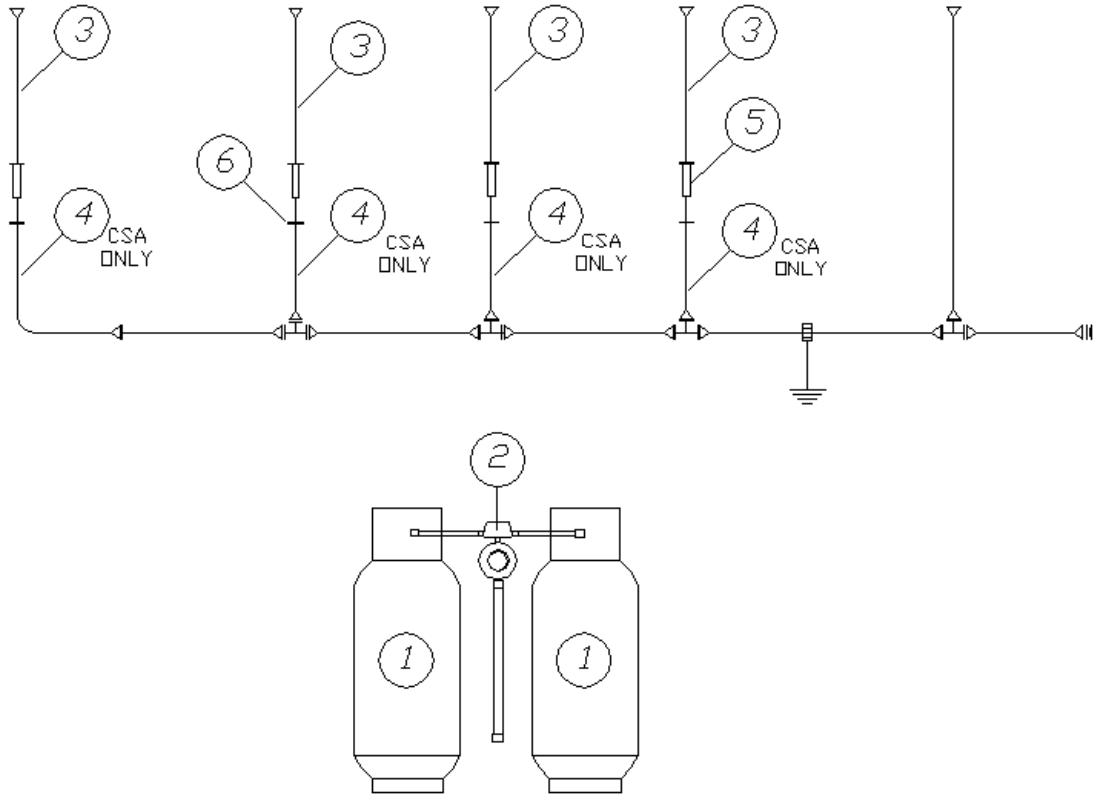

	943598	LPG System
1.	601710-01	LP cylinder, Steel
2.	602332-03	Cavanaugh gas regulator w/two 11” pigtails
3.	600008	Tubing, 3/8 OD, Copper
4.	601698-01	E-Pex tubing, ½”
5.	380887	Floor grommet
6.	380886	Underbelly grommet
	600435	Forged flare nuts, 3/8”
	602332-05	48” LP hose, 3/8” x ½” female flare

2018 INTERNATIONAL
PLUMBING, LPG SYSTEM

LPG System, 30’

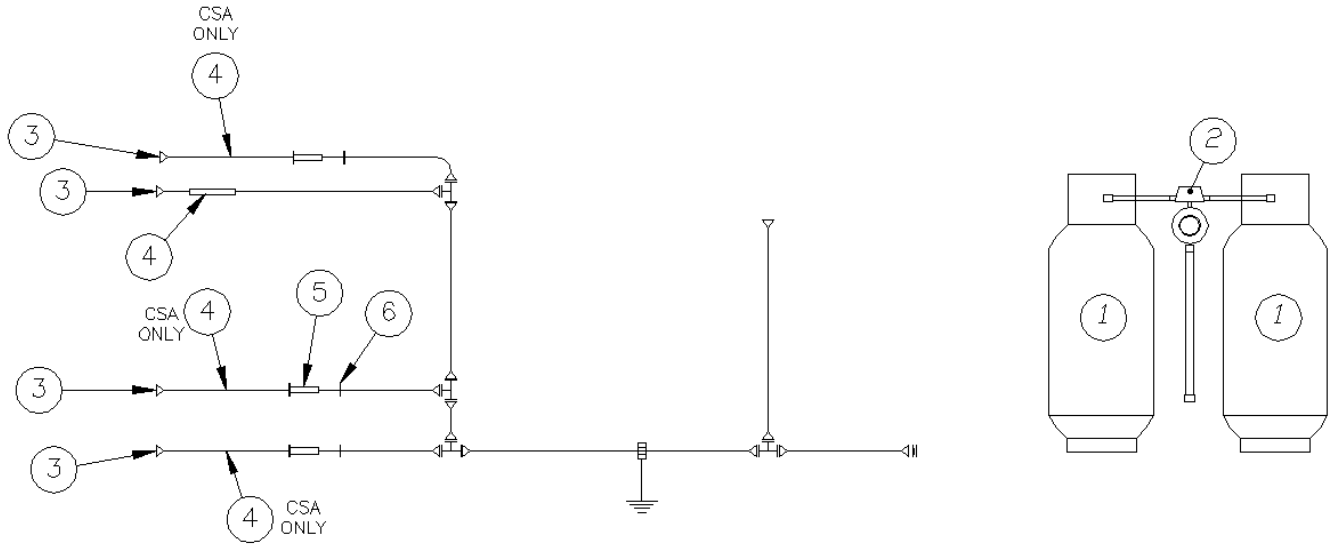

	943719	LPG System
1.	601710-01	LP cylinder, Steel
2.	602332-03	Cavanaugh gas regulator w/two 11” pigtails
3.	600008	Tubing, 3/8 OD, Copper
4.	601698-01	E-Pex tubing, ½”
5.	380887	Floor grommet
6.	380886	Underbelly grommet
	602332-05	48” LP hose, 3/8” x ½” female flare
	600435	Forged flare nuts, 3/8”
	340085-05	Clamp, 5/8” Dia

LPG Tanks and Covers

601710-01	LP cylinder, Steel
921246-01	LP tank cover, Black
602332-03	Cavanaugh gas regulator w/two 11” pigtails
602332-01	Wing nut
602332-02	Black pan
602332-05	48” LP hose, 3/8” x ½” female flare
602332-06	Hold down
602332-07	Z-bracket for regulator
381613	Plastisol cover, LP wing handle
115289-05	Cross bar, LP bottle cover, 5.31”
200841-02	Lid, LP tank cover
382091-01	Latch
382091-02	Strike

2018 INTERNATIONAL
PLUMBING, LPG SYSTEM

Propane Port, Exterior

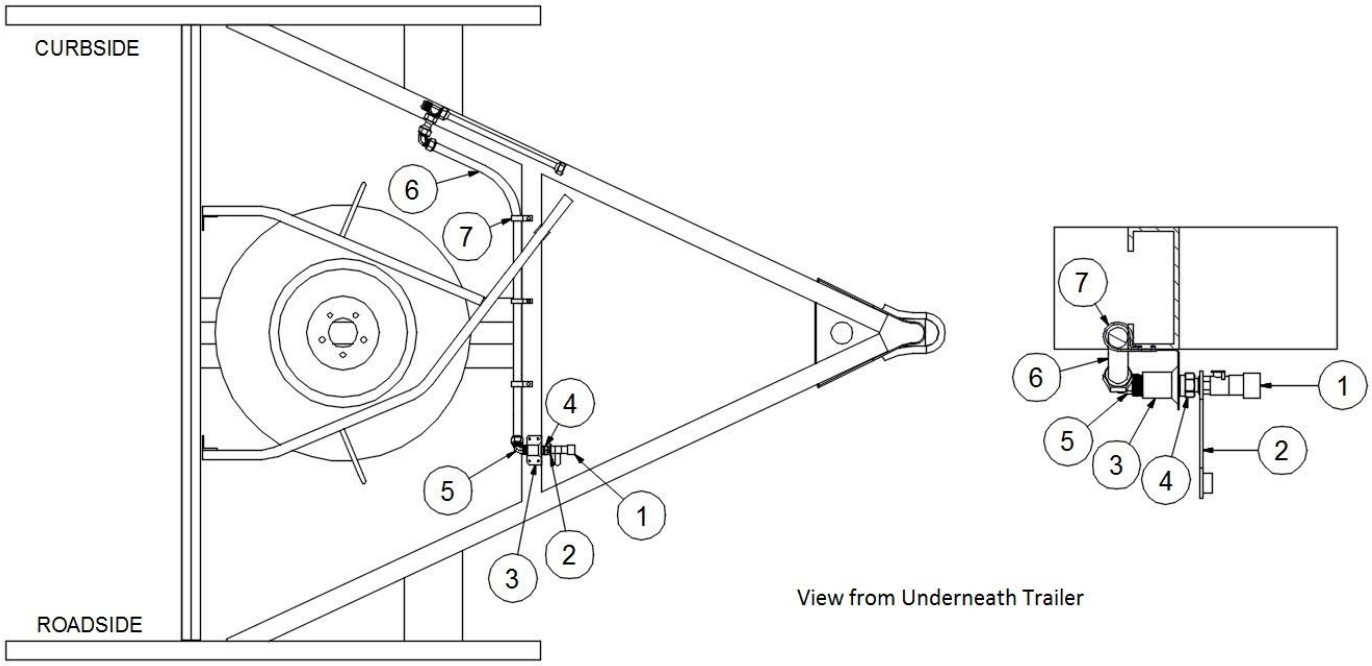

	112008	Exterior Propane Port
	112008-01	Exterior Propane Port, 28’
1.	602109-01	Coupler, Quick disconnect
2.	602109-03	Dust plug
3.	454901	Bracket, LP quick disconnect port
4.	602286	Nipple, .5” MNPT, ¼” MNPT
5.	602313	Fitting, .5” MPT x ½” FLR, 90°
6.	602315	LP hose, .5” FLR SWV, 36”
	602315-01	LP hose, 18”, 28’ only
7.	340085-07	Clamp, Loop, Steel w/rubber, 1”
	201267-11	Conduit, Convoluted, 1” Dia.
	386250	Label, LPG service port

Faucet, Galley

602549	Galley faucet, Pull-out, Chrome

1.	46927000	Lever
2.	46580000	Cartridge
3.	46926000	Pull-out spray
4.	46881000	Shower hose f. touch faucets
5.	48220000	Snap coupling
6.	0676800M	Dirt strainer
7.	08565000	Non-return valve
8.	48275000	Flow straightener

Numbers listed are Grohe part numbers

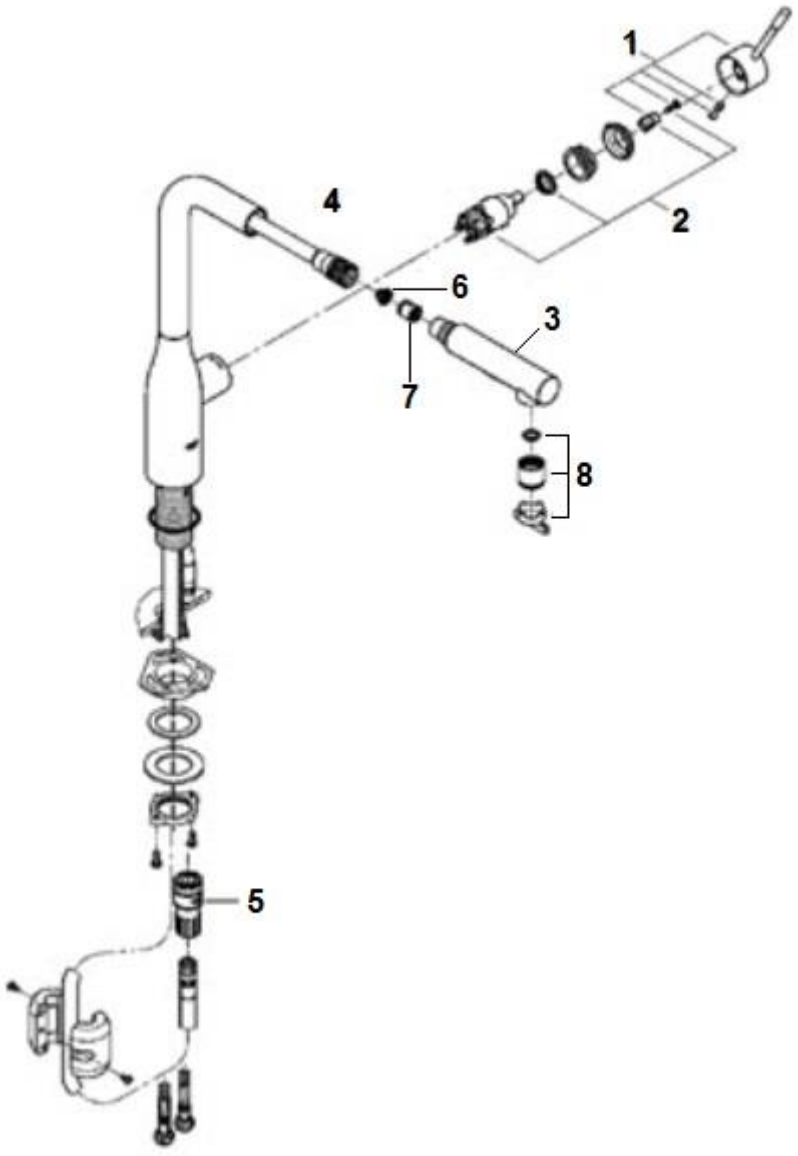

2018 INTERNATIONAL
PLUMBING, FRESH WATER

Faucet, Lavatory

602550 Lavy faucet, Single hole, Chrome

1.	46535000	Lever
2.	46436000	Cap
3.	46460000	Screw coupling
4.	46374000	Cartridge
5.	10769000	Pop-up rod
6.	46765000	Flow control
7.	46249000	Shank mounting kit
8.	28957000	waste fitting
9.	46375000	Temperature limiter
10.	19332000	Socket spanner
11.	19017000	Mounting wrench
12.	45324000	Plug
13.	01153000	Housing
14.	45264000	Ball rod

Numbers listed are Grohe part numbers

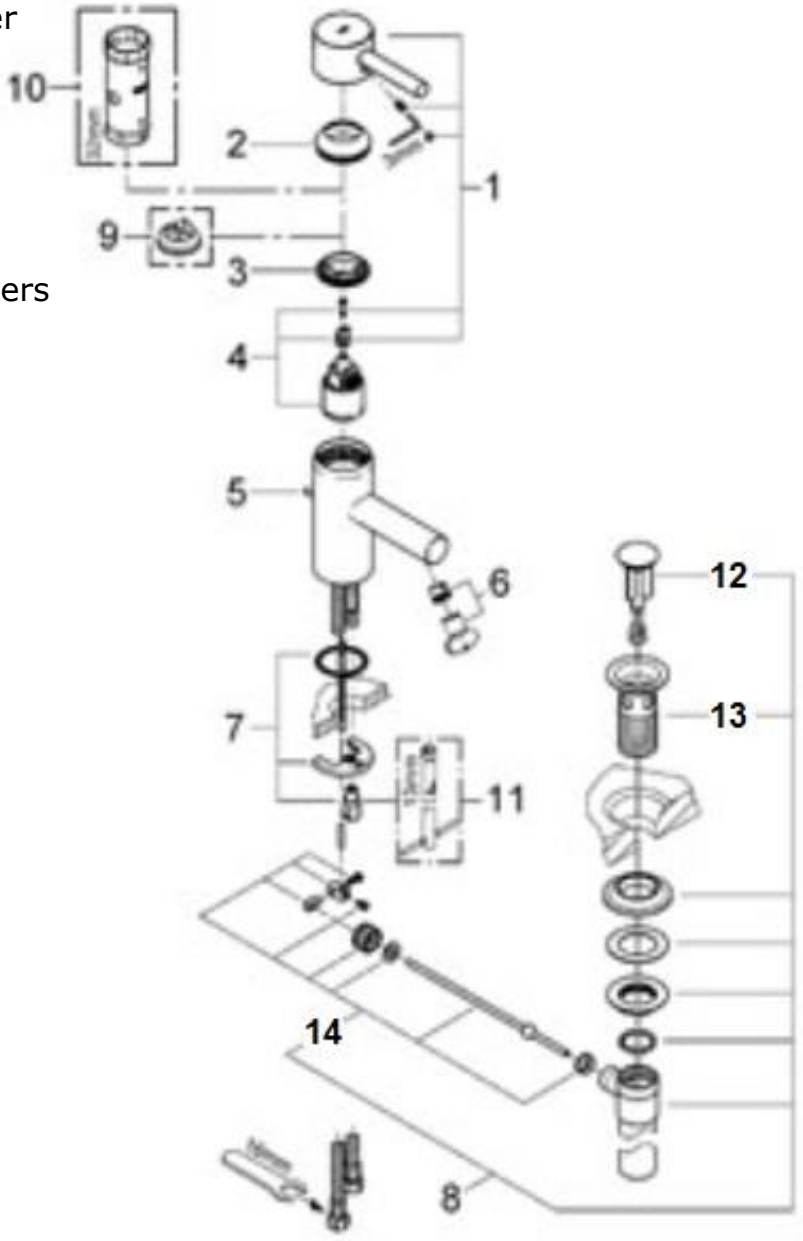

2018 INTERNATIONAL
PLUMBING, FRESH WATER

Faucet, Shower

601829	Shower handle, Chrome
601358	Kit, Hand shower unit, Wall mount, Chrome
601358-100	Shower head
601358-101	Wall plate w/pin
601358-102	Swivel w/shower hook
601358-103	Swivel connector
601358-104	Shower supply elbow

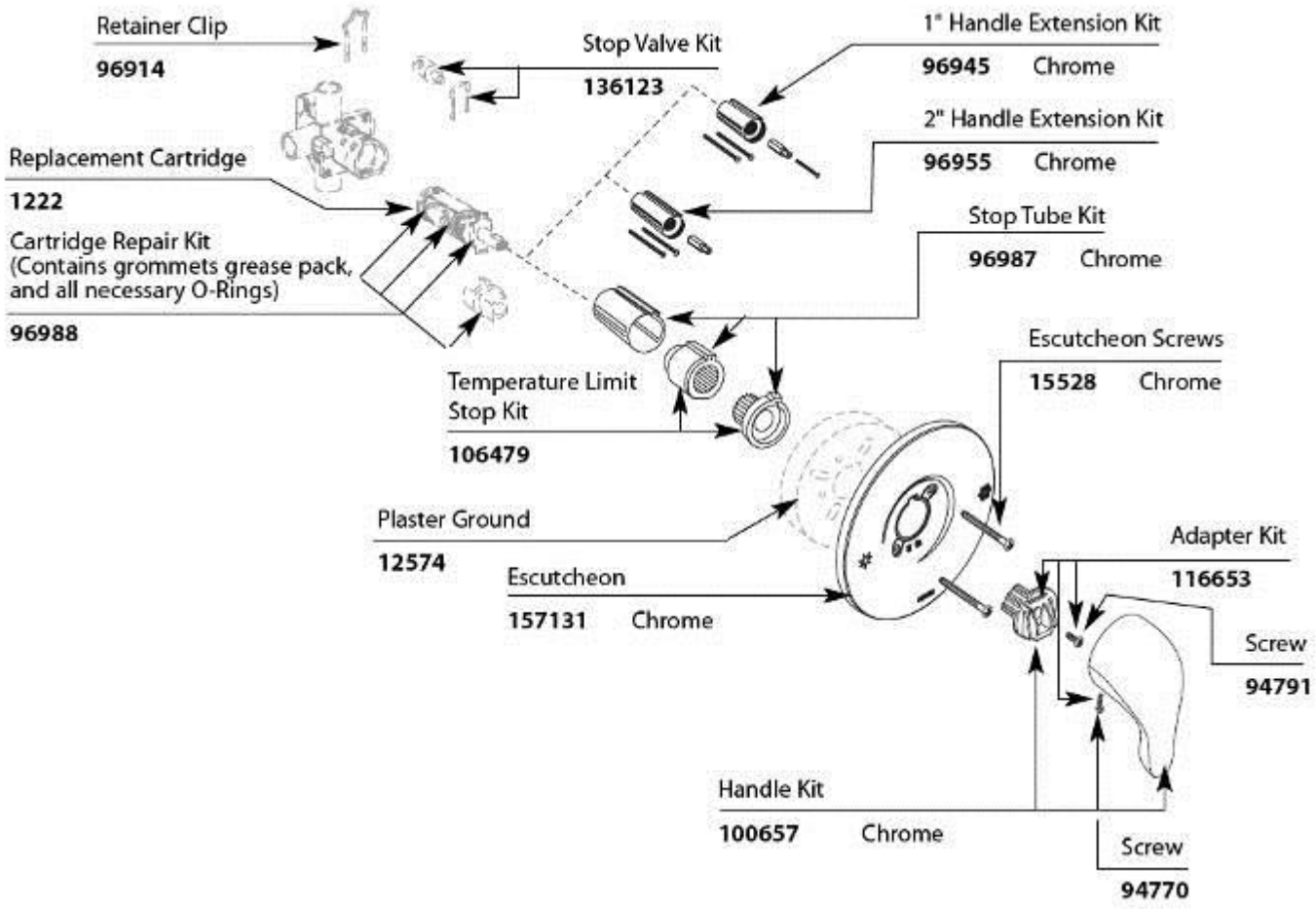

*Numbers listed are Moen part numbers

2018 INTERNATIONAL
PLUMBING, FRESH WATER

City Water Hook-Up

601392-06	City water hook-up w/regulator, 50 PSI, Chrome
601392-01	Plastic screw in cap

Fresh Water Tank Fill

601194	Water fill w/lock, Gray
601194-02	Cap, cable, and spout
601239-01	Tubing, 1.375” ID, Ribbed
601240-01	Tubing, .5” ID, 3/32" wall thickness

Water Pump

602307	Shurflo water pump, 3 GPM
601668-01	Strainer, Water pump

2018 INTERNATIONAL
PLUMBING, FRESH WATER

Fresh Water Tank, 23CB, 23FB

601863-02	Tank, Fresh water, 39 gallon
966288	Tank pan
602185-01	Drain valve, 90° turn, Lead free
601723	Filter screen

Fresh Water Tank, 25’, 25FB, 28’

601863-01	Tank, Fresh water, 39 gallon
602520	Tank pan, Fresh water
602185-01	Drain valve, 90° turn, Lead free
601243	Drain cock, Fresh water
453493	Hanger strap, Tank pan
600155	Plug, Cleanout, 1.5”
601723	Filter screen

Fresh Water Tank, 27FB

601863-01	Tank, Fresh water, 39 gallon
601620	Tank pan, Fresh water
601243	Drain cock
600155	Plug, Cleanout, 1.5”
601723	Filter screen

Fresh Water Tank, 30’

601864-01	Tank, Fresh water, 54.5 gallon
601620	Tank pan, Fresh water
600155	Plug, Cleanout, 1.5”

2018 INTERNATIONAL
PLUMBING, FRESH WATER

Fresh Water Fittings

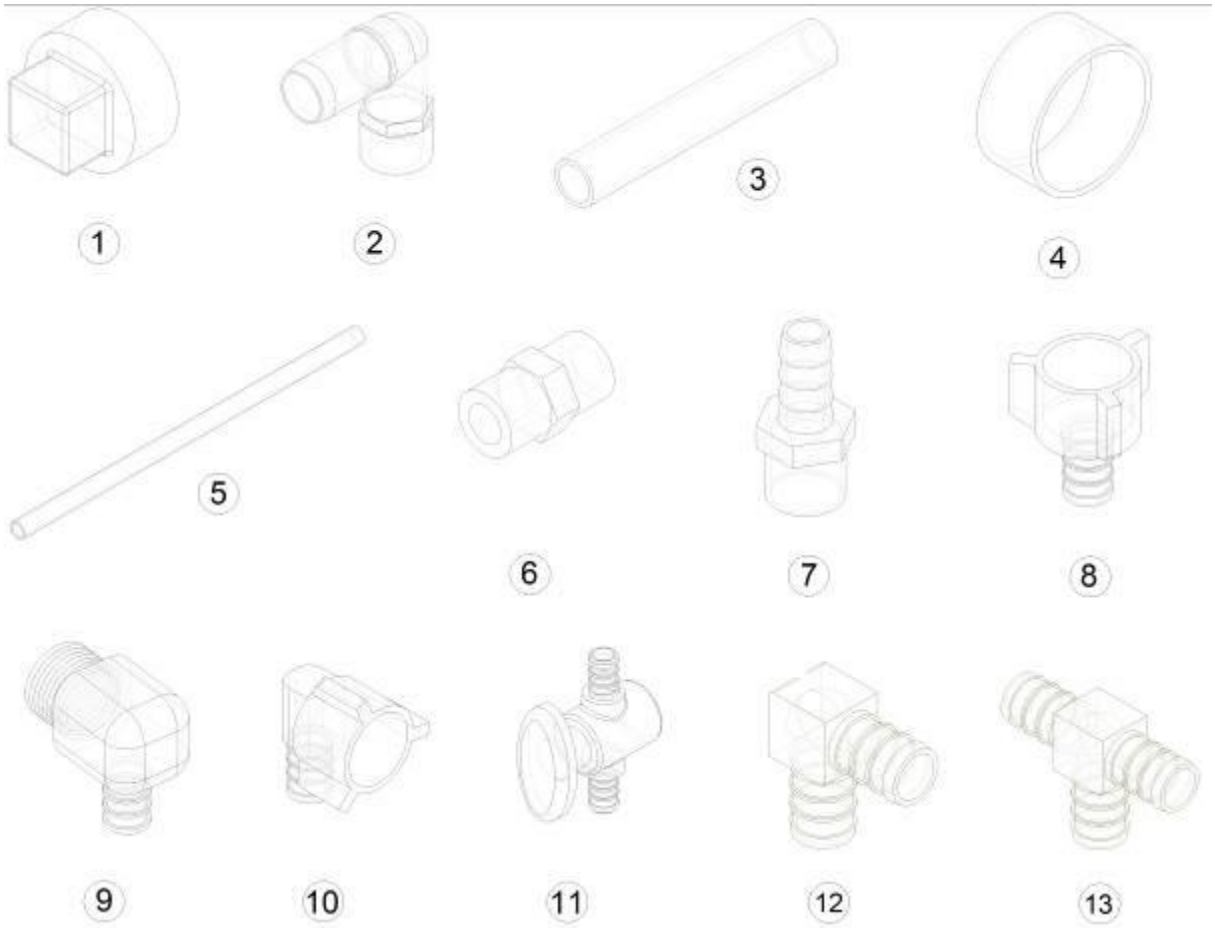

1.	600155	Cleanout plug, 1.5”
2.	601237	Elbow, 90°, 1.25 MPT x 1.25 Bar
3.	601698-01	E-Pex tube, ½”
4.	601698-15	Crimp ring, ½” E-Pex, ½”, Black
5.	601698-21	E-Pex tube, ½”, Red
6.	602256-01	Nipple, Poly .5” MPT x .5” MPT
7.	602256-02	Coupler, ½” barb x ½” MPT
8.	602256-03	Coupler, ½” barb x ½” FPT
9.	602256-04	Elbow, ½” barb x ½” MPT
10.	602256-05	Elbow, ½ barb x½” FPT
11.	602256-22	Valve, .5 barb x .5 straight
12.	602256-10	Elbow, ½” barb x ½” barb
13.	602256-11	Tee, ½” x ½” x ½”
	600836	Elbow, 3/8” MPT x .5” barb, Copper
	601239-01	Tubing, 1.375 ID, w/flats every 9”
	601240	Tubing, 3/8” ID x 3/32 wall clearance
	602185-01	Drain valve, 90°

2018 INTERNATIONAL
PLUMBING, FRESH WATER

Fresh Water Lines, 23CB

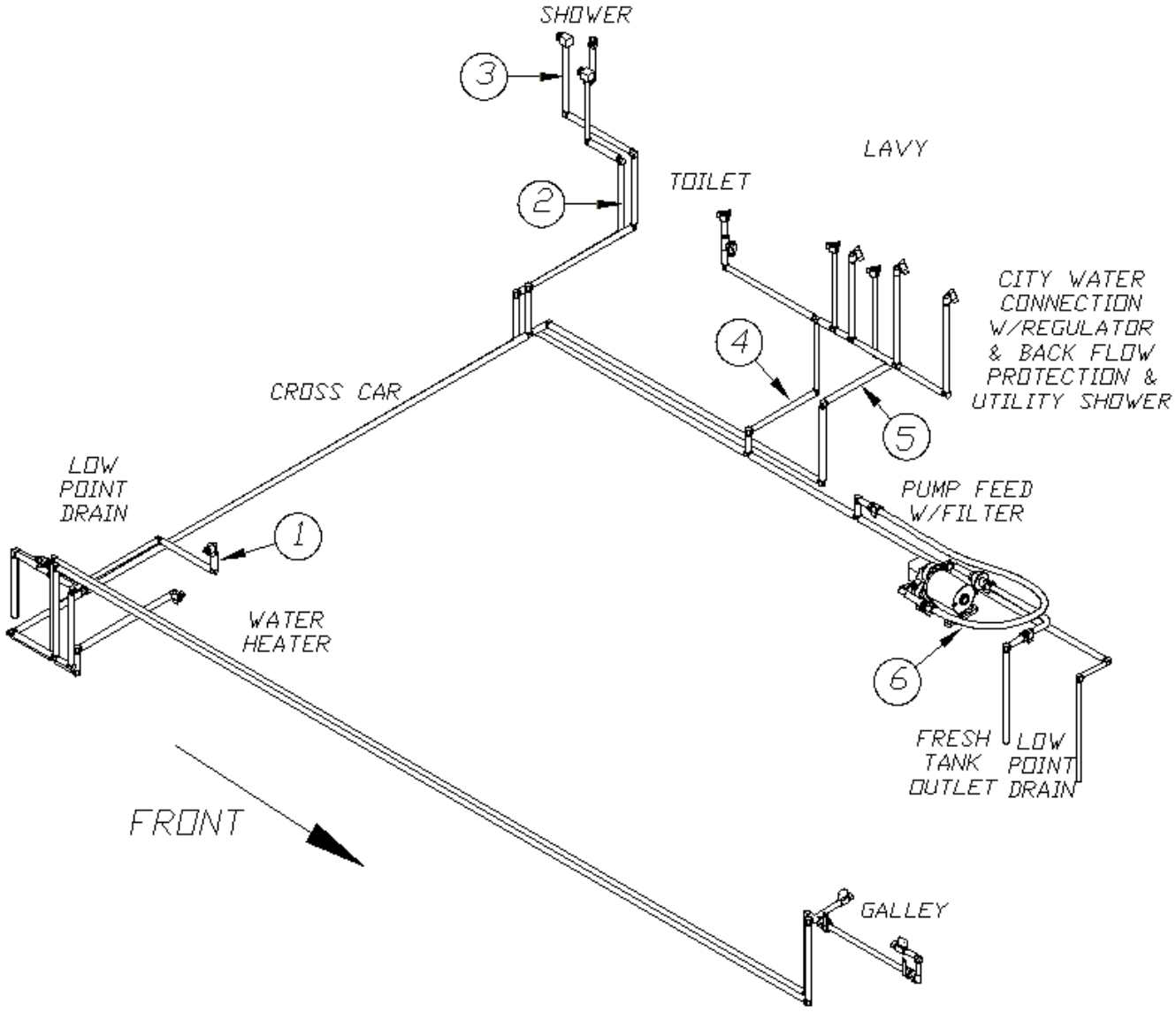

	943686	Fresh Water Layout
1.	943686-01	Water heater hook-up
2.	943686-04	Cross-car cold lines
3.	943686-05	Cross-car hot lines
4.	943686-06	RS cold
5.	943686-07	RS hot
6.	943686-08	water pump connect
	943565-01	Tank flush

2018 INTERNATIONAL
PLUMBING, FRESH WATER

Fresh Water Lines, 23FB

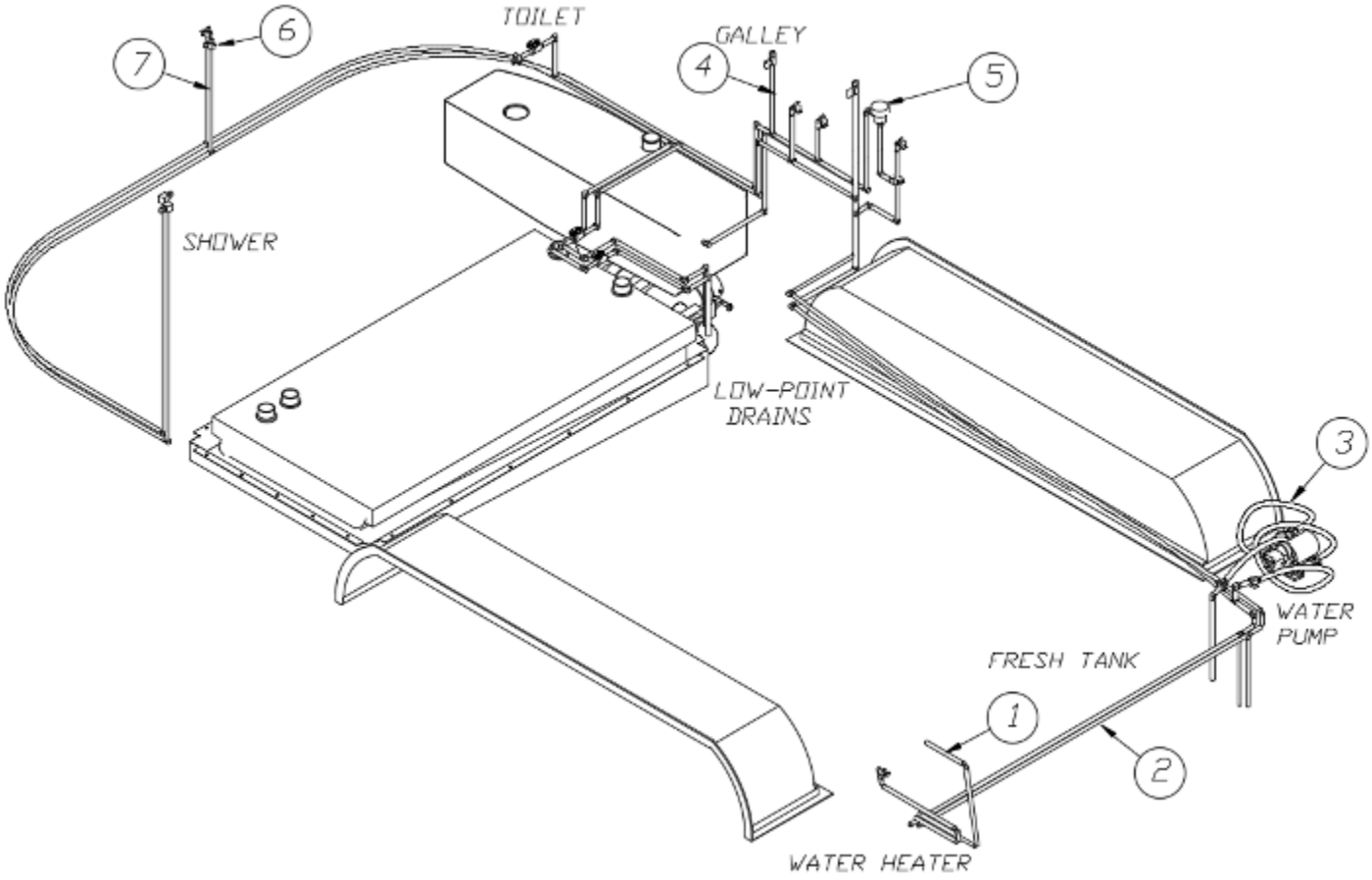

	943698-101	Fresh Water Layout
1.	943698-01	Water heater by-pass
2.	943698-02	Fresh water tank lines
3.	943698-03	Water pump lines
4.	943698-05	RS hot
5.	943698-08	Black tank flush
6.	943698-09	Rear hot
7.	943698-10	Rear cold

2018 INTERNATIONAL
PLUMBING, FRESH WATER

Fresh Water Lines, 25’

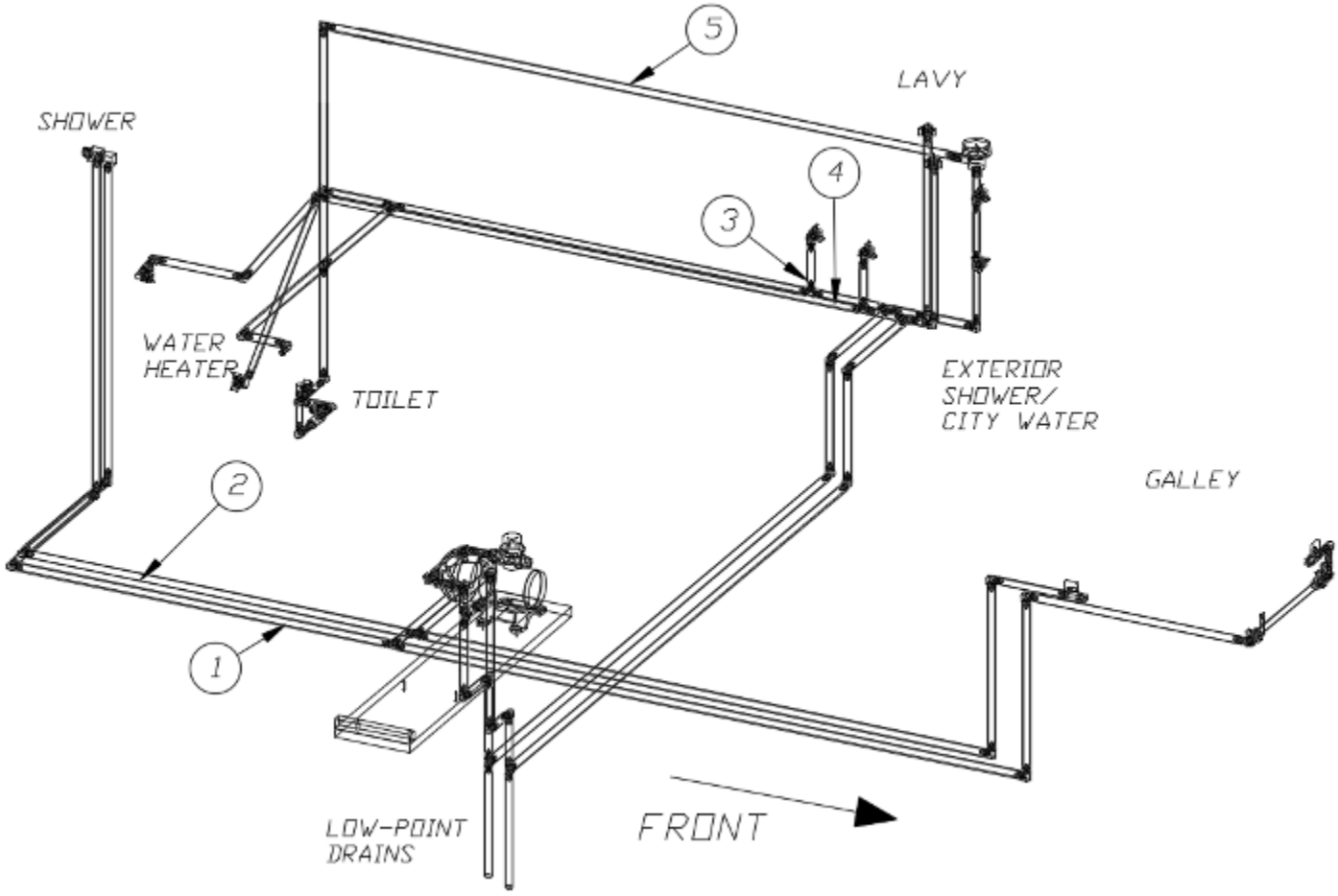

	943732-INT	Fresh Water Layout
1.	943732-06	CS cold
2.	943732-07	CS hot
3.	943732-08	RS cold
4.	943732-09	RS hot
5.	943732-05	Tank flush lines

2018 INTERNATIONAL
PLUMBING, FRESH WATER

Fresh Water Lines, 25FB

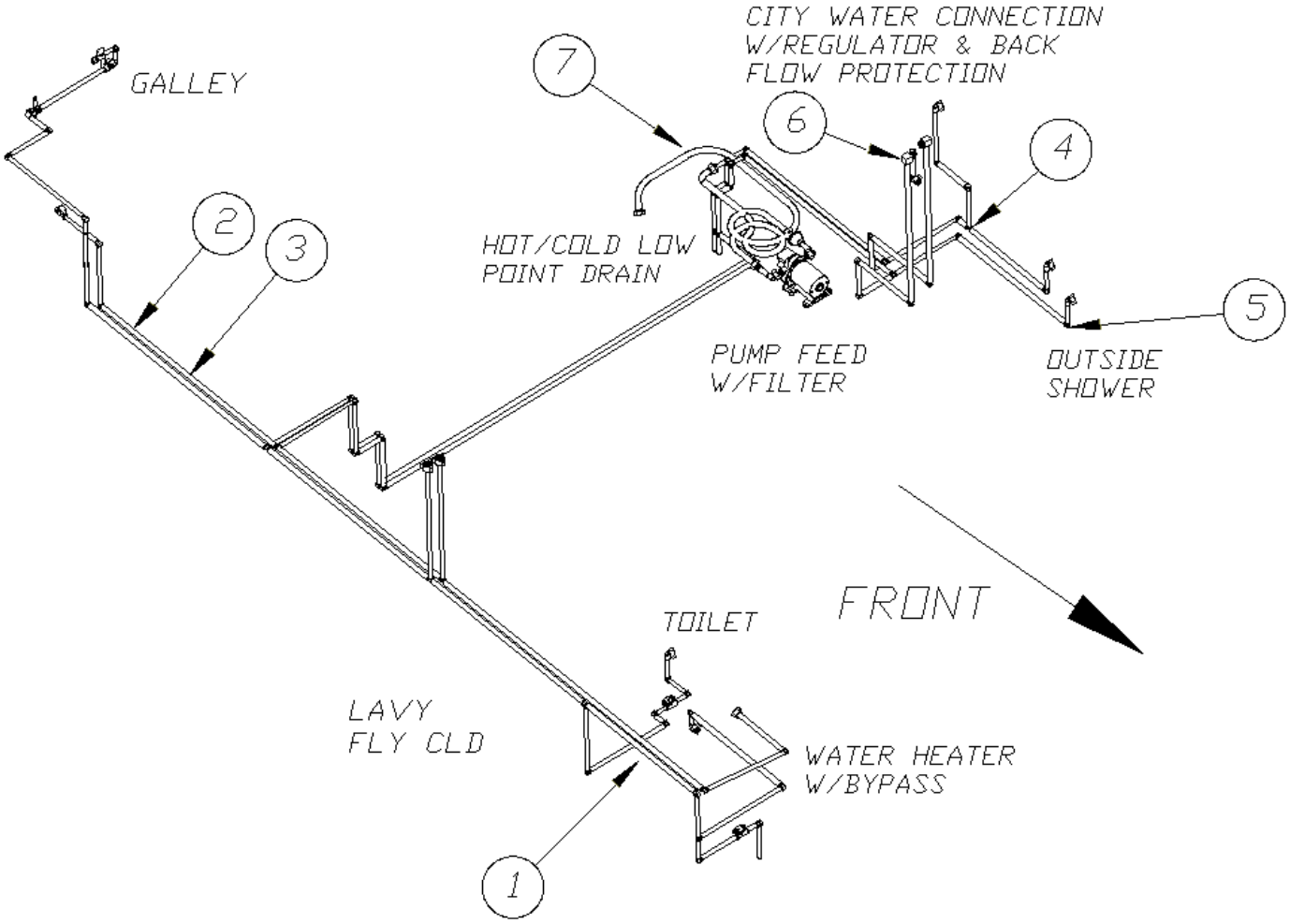

943633-101	Fresh Water Layout

1. 943633-01	Water heater by-pass
2. 943633-12	CS hot
3. 943633-13	CS cold
4. 943633-04	RS cold
5. 943633-05	RS hot
6. 943633-06	Shower control valve
7. 943633-07	Water pump connect

2018 INTERNATIONAL
PLUMBING, FRESH WATER

Fresh Water Lines, 27FB

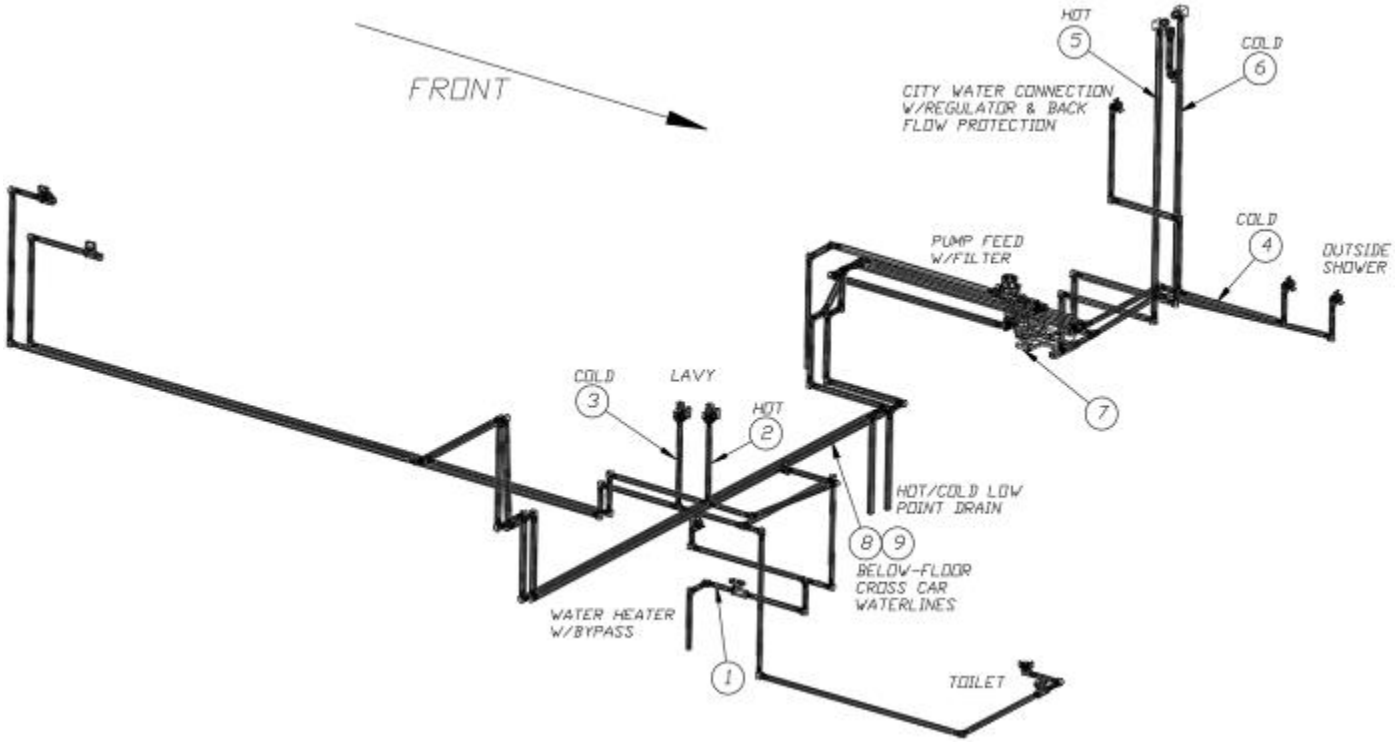

943670-101	Fresh Water Layout

1.	943670-01	Water heater by-pass
2.	943670-13	CS hot
3.	943670-14	CS cold
4.	943670-04	RS cold
5.	943670-05	RS hot
6.	943670-06	Shower control valve
7.	943670-07	Water pump connect
8.	943617-01	Crossover line, Cold
9.	943617-08	Crossover line, Hot

2018 INTERNATIONAL
PLUMBING, FRESH WATER

Fresh Water Lines, 28’

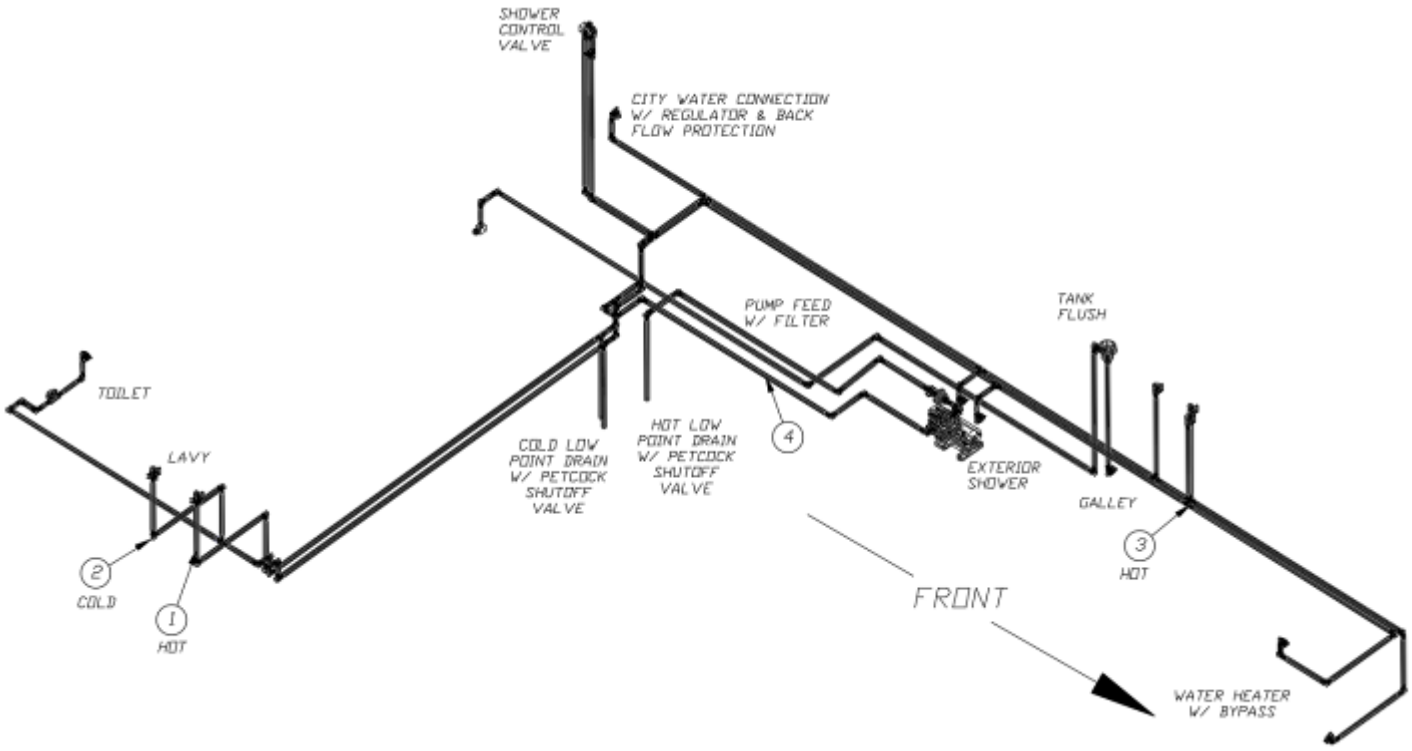

	943600-101	Fresh Water Layout
1.	943600-08	CS hot
2.	943600-09	CS cold
3.	943600-03	RS hot
4.	943600-05	Water pump connect
	340085-06	Clamp, Steel w/rubber, .75 Dia.

2018 INTERNATIONAL
PLUMBING, FRESH WATER

Fresh Water Lines, 30’

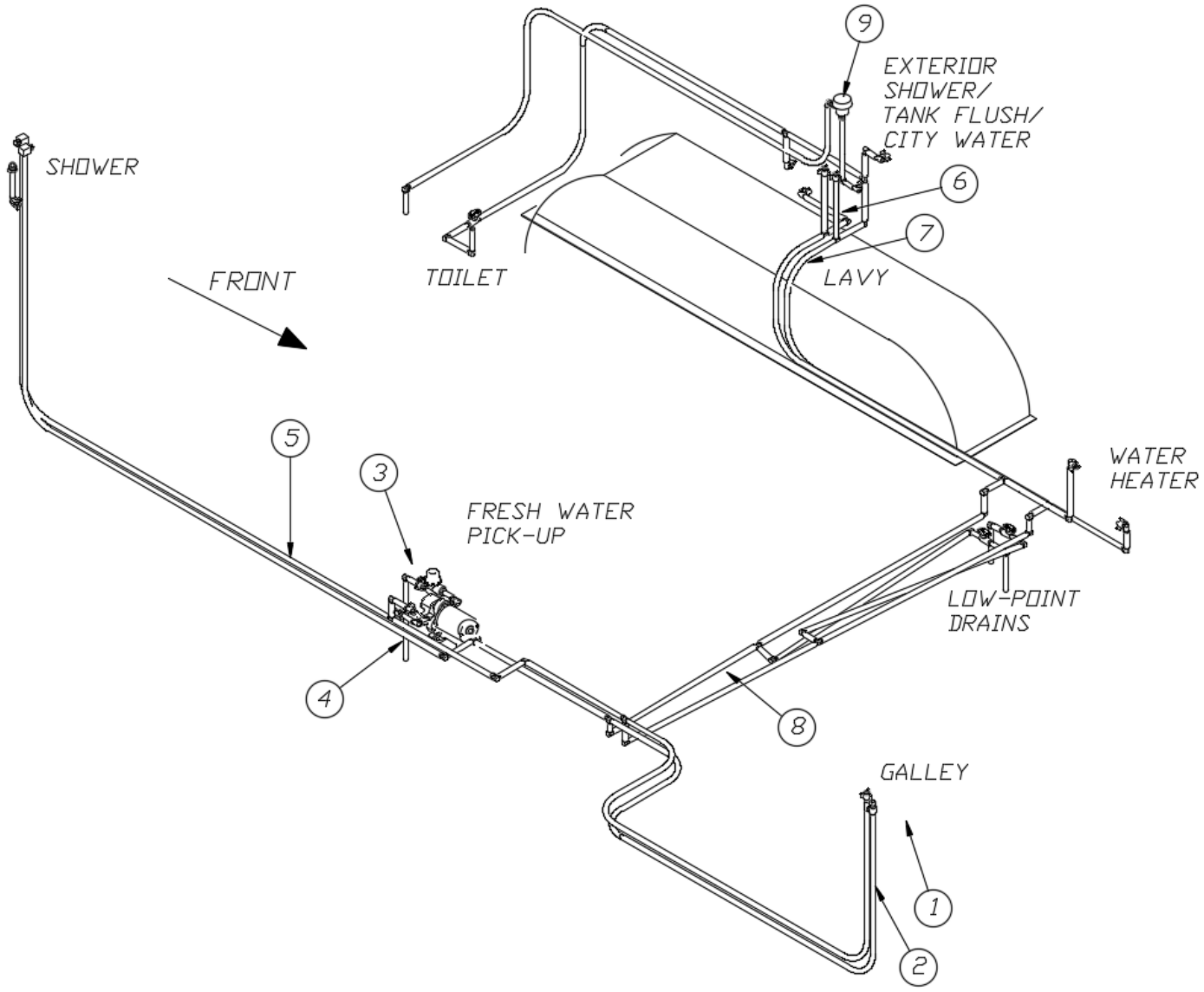

943721-101	Fresh Water System

1. 943721-12	Galley, Cold
2. 943721-02	Galley, Hot
3. 943721-03	Pick-up, Cold
4. 943721-04	CS hot
5. 943721-05	CS cold
6. 943721-10	RS cold
7. 943721-11	RS hot
8. 943721-08	Cross-car water lines
9. 943721-09	Tank flush

2018 INTERNATIONAL
PLUMBING, DRAIN

Drain, Above Floor, 23CB

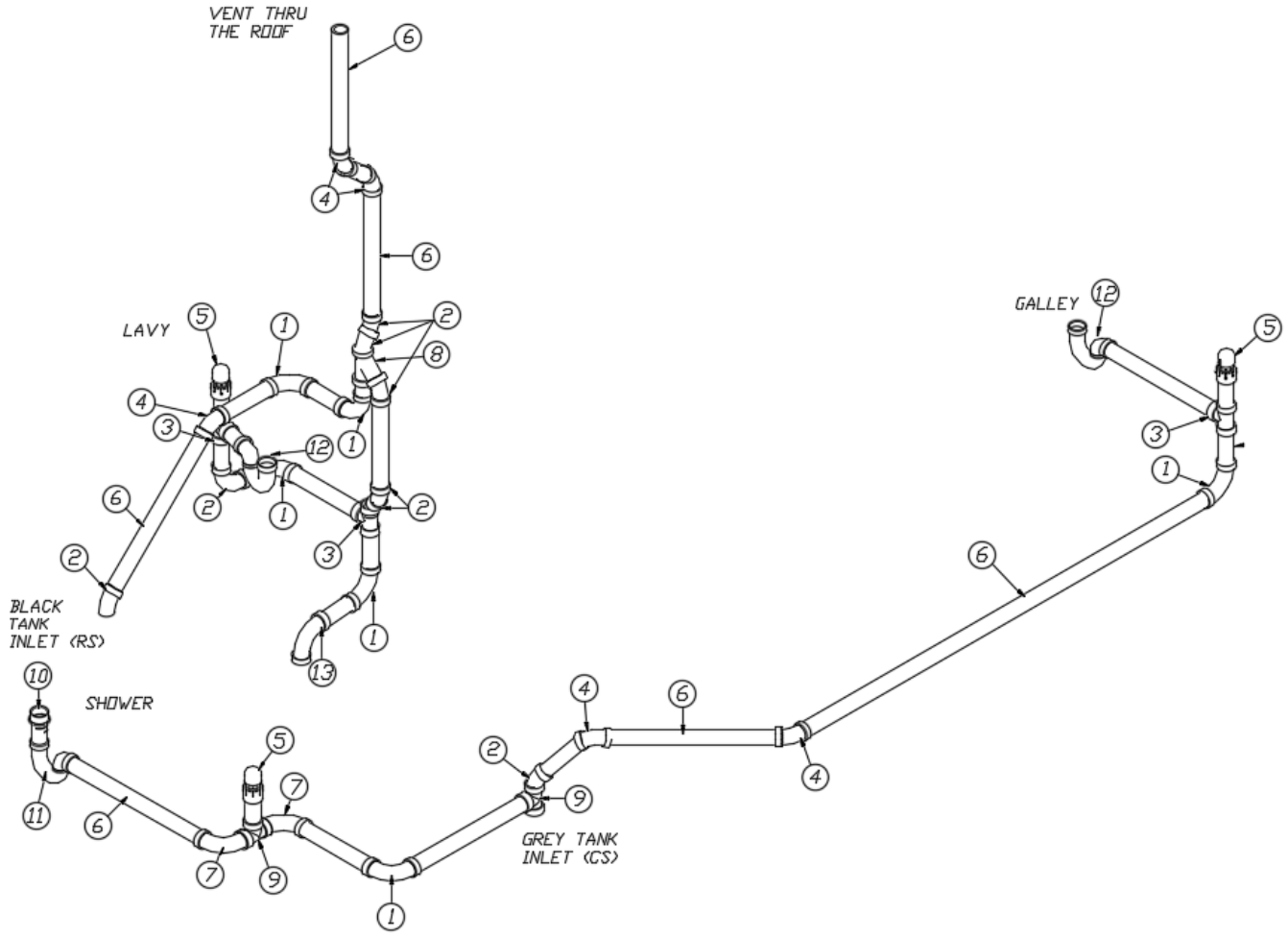

	943685	Above Floor Drain System
1.	600035	Ell, ABS, Long sweep, 1.5”
2.	600027	Elbow, ABS, Long sweep, 45°
3.	600156	Tee, Sanitary
4.	600030	Ell, ABS, 45°, Long turn
5.	602306	Valve, 2” Air admittance
6.	601160-02	Pipe, ABS, 1.5”
7.	600431	Elbow, 90°, 1.5”
8.	600094	Wye
9.	601868	Tee, Sanitary
10.	602164-02	Tailpiece w/nuts & washers, 1.5”
11.	602164-01	P-trap w/compression nut, 1.5”
12.	600622	P-trap, 1.5” w/slip nut & washer
13.	600662	Elbow, Short radius, 1.5”
	690700-01	Vent cap cover, White

2018 INTERNATIONAL
PLUMBING, DRAIN

Drain, Above Floor, 23FB

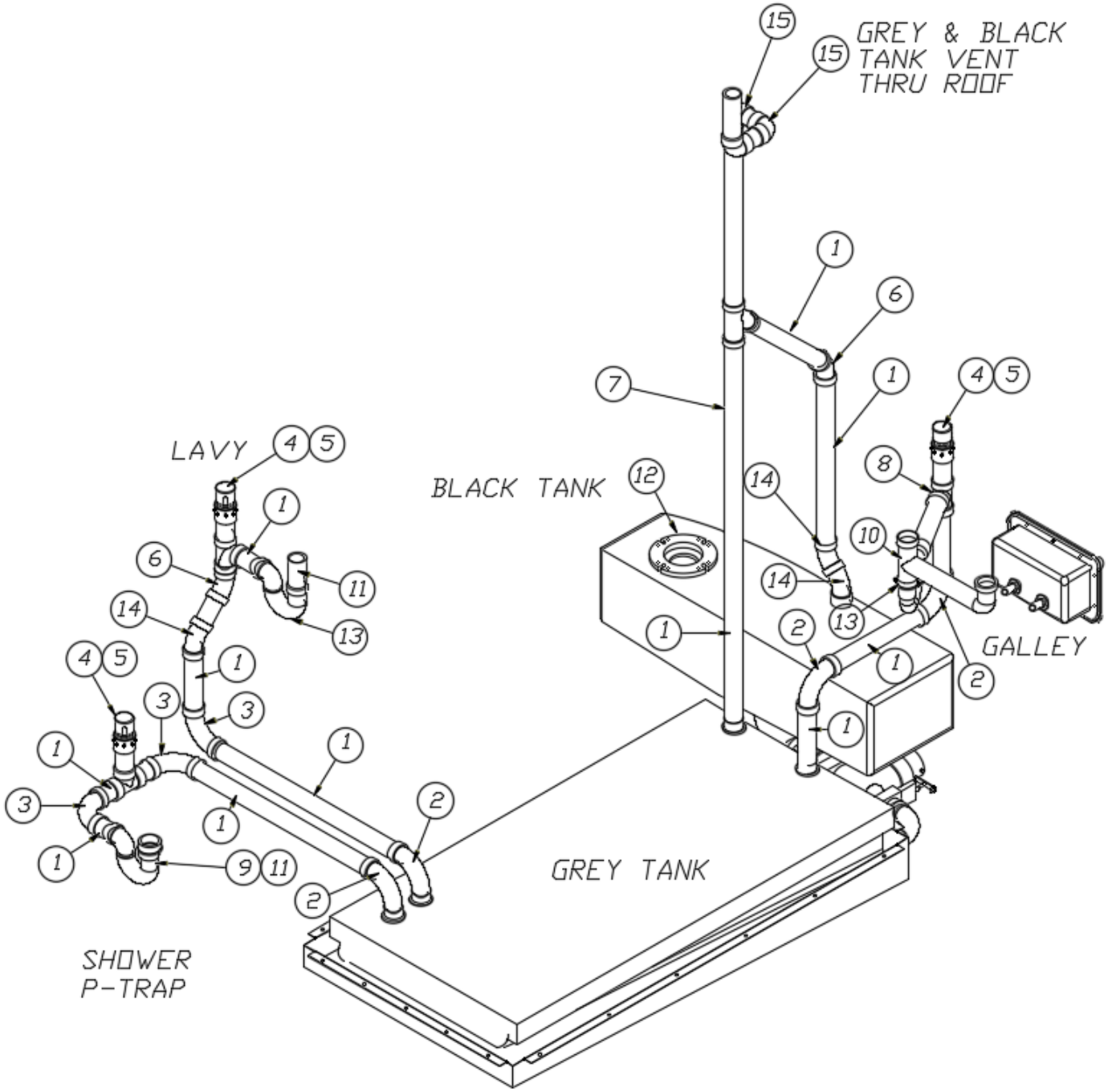

Parts Listed on Next Page

Drain, Above Floor, 23FB

	943790	Above Floor Drain System
1.	601160-02	Pipe, ABS, 1.5”
2.	600662	Elbow, Short radius, 1.5”
3.	600035	Ell, ABS, Long sweep, 1.5”
4.	602306	Vent, V-200 automatic
5.	600308	Adapter, ABS female
6.	600030	Ell, ABS, 45°, Long turn
7.	600094	Wye
8.	600156	Tee, Sanitary
9.	602164-01	P-trap w/compression nut, 1.5”
10.	600378	Continuous waste, 1.5”
11.	602164-02	Tailpiece w/nuts & washers, 1.5”
12.	601266	Flange, Slip fit
13.	600622	P-trap, 1.5” w/slip nut & washer
14.	600027	Elbow, ABS, Long sweep, 45°
15.	600033	Elbow, Vent, 1.5”, 90°
	601267-02	Nipple, Threaded one end only, 6”
	690700-01	Vent cap cover, White

Drain, Above Floor, 25’

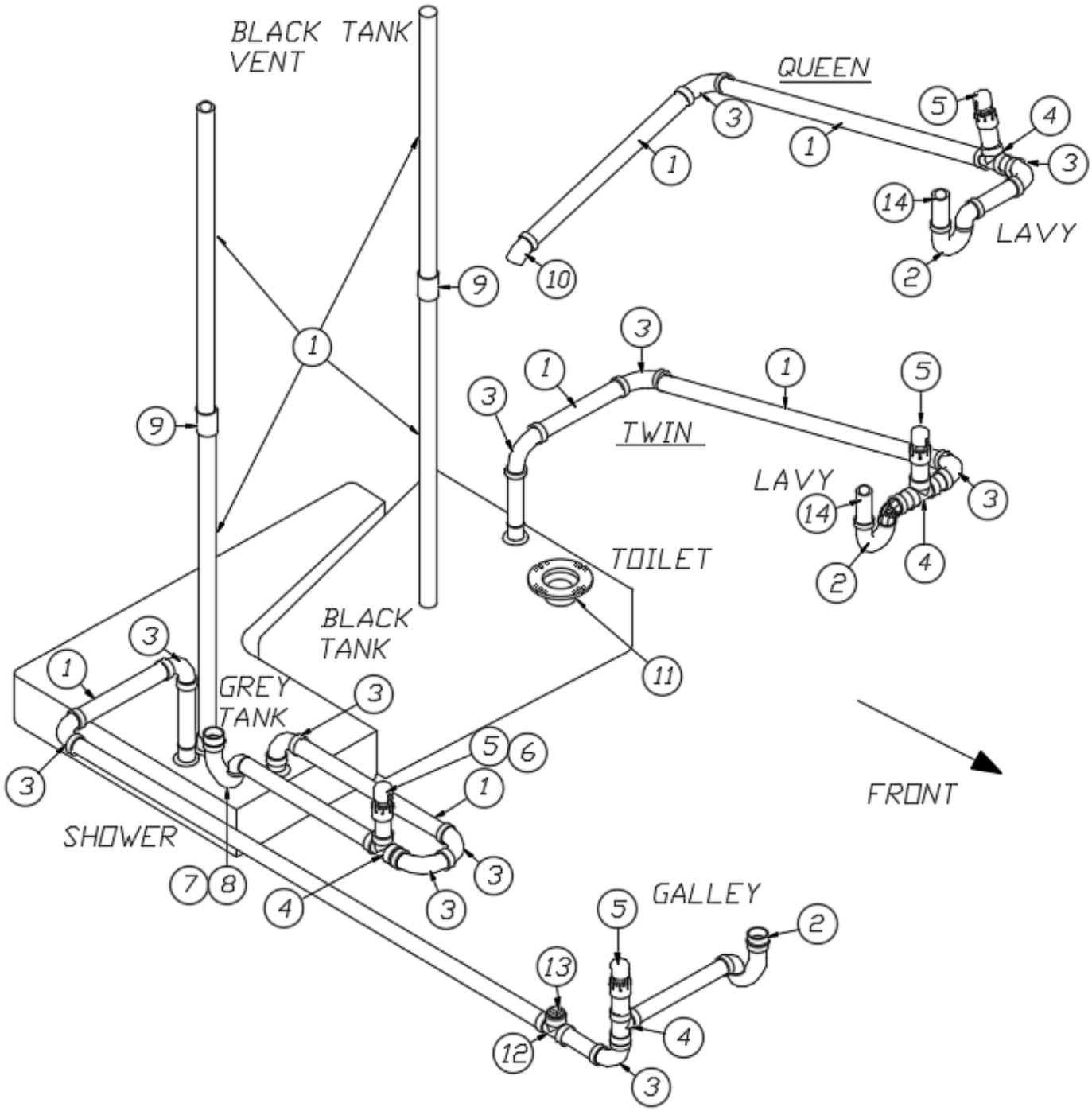

Parts Listed on Next Page

Drain, Above Floor, 25’

	943733-01	Above Floor Drain System, Twin
	943733-02	Above Floor Drain System, Queen
1.	601160-02	Pipe, ABS 1.5”
2.	600622	P-trap, 1.5” w/slip nut & washer
3.	600035	Elbow, Extra-long sweep
4.	600156	Tee, Sanitary
5.	602306	Valve, 2” air admittance Ayrlet
6.	600308	Adapter, ABS, Female
7.	602164-01	P-trap w/compression nut, 1.5”
8.	602164-02	Tailpiece w/nuts & washers, 1.5”
9.	600227	Plastic coupling
10.	600027	Elbow, ABS, Long sweep, 45°
11.	600065	Flange, Floor threaded
12.	601318	Tee, Bi-directional cleanout
13.	600155	Plug, Cleanout, 1.5”
14.	601714-02	Tailpiece
	690700-01	Vent cap cover, White

2018 INTERNATIONAL
PLUMBING, DRAIN

Drain, Above Floor, 25FB

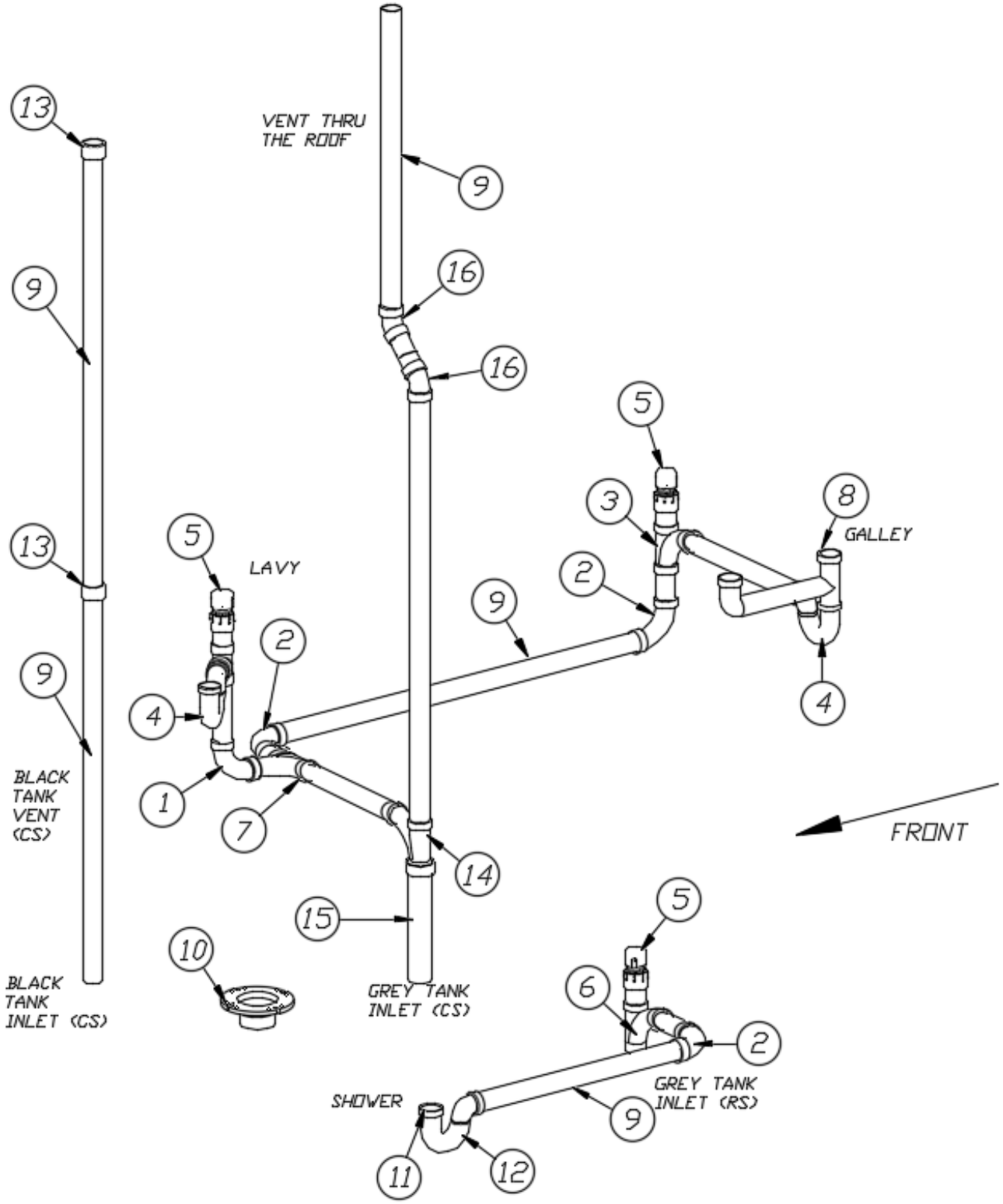

Parts Listed on Next Page

Drain, Above Floor, 25FB

	943632	Above Floor Drain System
1.	600431	Elbow, 90°, 1.5”
2.	600035	Ell, ABS, Long sweep, 1.5”
3.	600156	Tee, Sanitary
4.	600622	P-trap, 1.5” w/slip nut & washer
5.	602306	Valve, 2” air admittance
6.	601868	Tee, Sanitary
7.	600182	Wye, 1/8” bend
8.	600378	Continuous waste, 1.5”
9.	601160-02	Pipe, ABS, 1.5”
10.	600065	Flange, Floor threaded
11.	602164-02	Tailpiece w/nuts & washers, 1.5”
12.	602164-01	P-trap w/compression nut, 1.5”
13.	600227	Plastic coupling
14.	602072	Tee, Sanitary, Reducing
15.	601160-03	Pipe, ABS, 2”
16.	600030	Ell, ABS, 45°, Long turn
	690700-01	Vent cap cover, White

2018 INTERNATIONAL
PLUMBING, DRAIN

Drain, Above Floor, 27FB

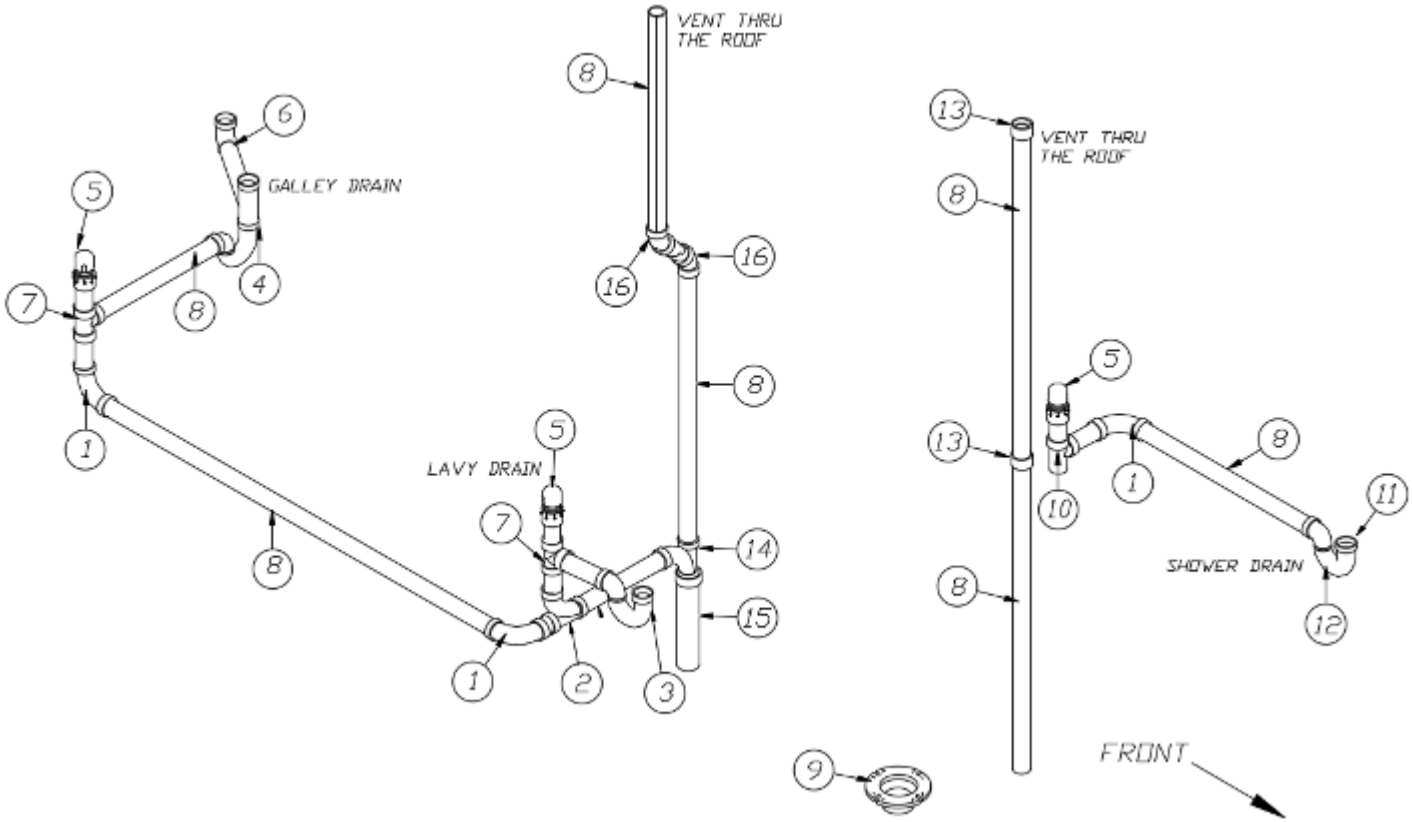

	943672	Above Floor Drain System
1.	600035	Ell, ABS, Long sweep, 1.5”
2.	600182	Wye
3.	600144	P-trap, ABS, 1.5”
4.	600622	P-trap, 1.5” w/slip nut & washer
5.	602306	Valve, 2” air admittance
6.	600378	Continuous waste, 1.5”
7.	600156	Tee, Sanitary
8.	601160-02	Pipe, ABS, 1.5”
9.	600065	Flange, Floor threaded
10.	601868	Tee, Sanitary
11.	602164-02	Tailpiece w/nuts & washers, 1.5”
12.	602164-01	P-trap w/compression nut, 1.5”
13.	600227	Plastic coupling
14.	602072	Tee, Sanitary, Reducing
15.	601160-03	Pipe, ABS, 2”
16.	600030	Ell, ABS, 45°, Long turn
	690700-01	Vent cap cover, White

2018 INTERNATIONAL
PLUMBING, DRAIN

Drain, Above Floor, 28’

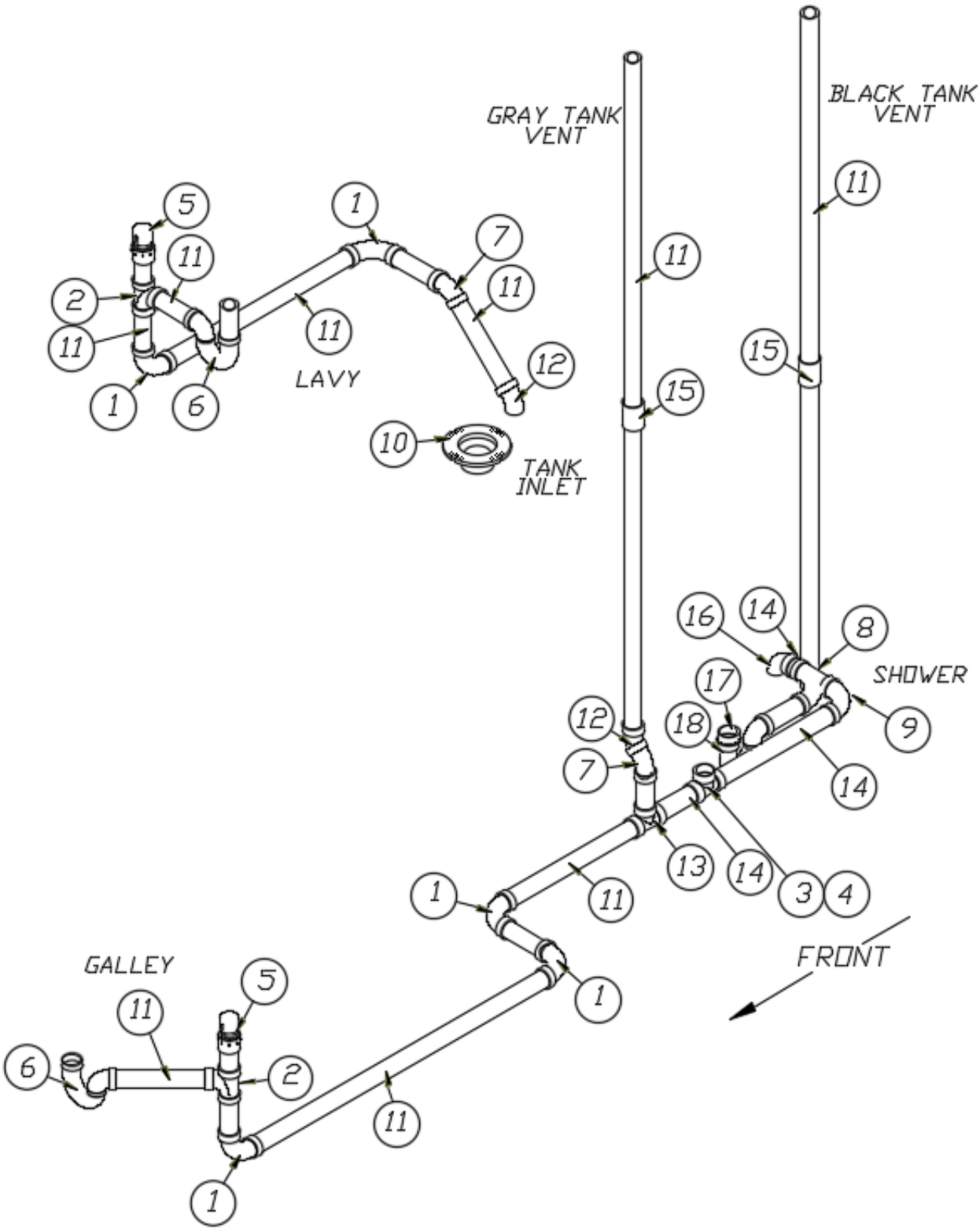

Parts Listed on Next Page

Drain, Above Floor, 28’

	943599-01	Above Floor Drain System
1.	600035	Ell, ABS, Long sweep, 1.5”
2.	600156	Tee, Sanitary
3.	602073	Fixture tee, 2 x 2 x 1.5
4.	600155	Cleanout plug, 1.5”
5.	602306	Valve, 2” air admittance
6.	600622	P-trap, 1.5” w/slip nut & washer
7.	600030	Ell, ABS, 45°, Long turn
8.	600318	Wye, Long turn, 2 x 2 x 1.5
9.	600372	Elbow, 90°, 2”
10.	600065	Flange, Floor threaded
11.	601160-02	Pipe, ABS, 1.5”
12.	600027	Elbow, ABS, Long sweep, 45°
13.	602072	Tee, Sanitary, Reducing
14.	601160-03	Pipe, ABS, 2”
15.	600227	Plastic coupling
16.	602112	Elbow, 90°, Short sweep, 2”
17.	602164-02	Tailpiece w/nuts & washers, 1.5”
18.	602164-01	P-trap w/compression nut, 1.5”
	690700-01	Vent cap cover, White

2018 INTERNATIONAL
PLUMBING, DRAIN

Drain, Above Floor, 30’

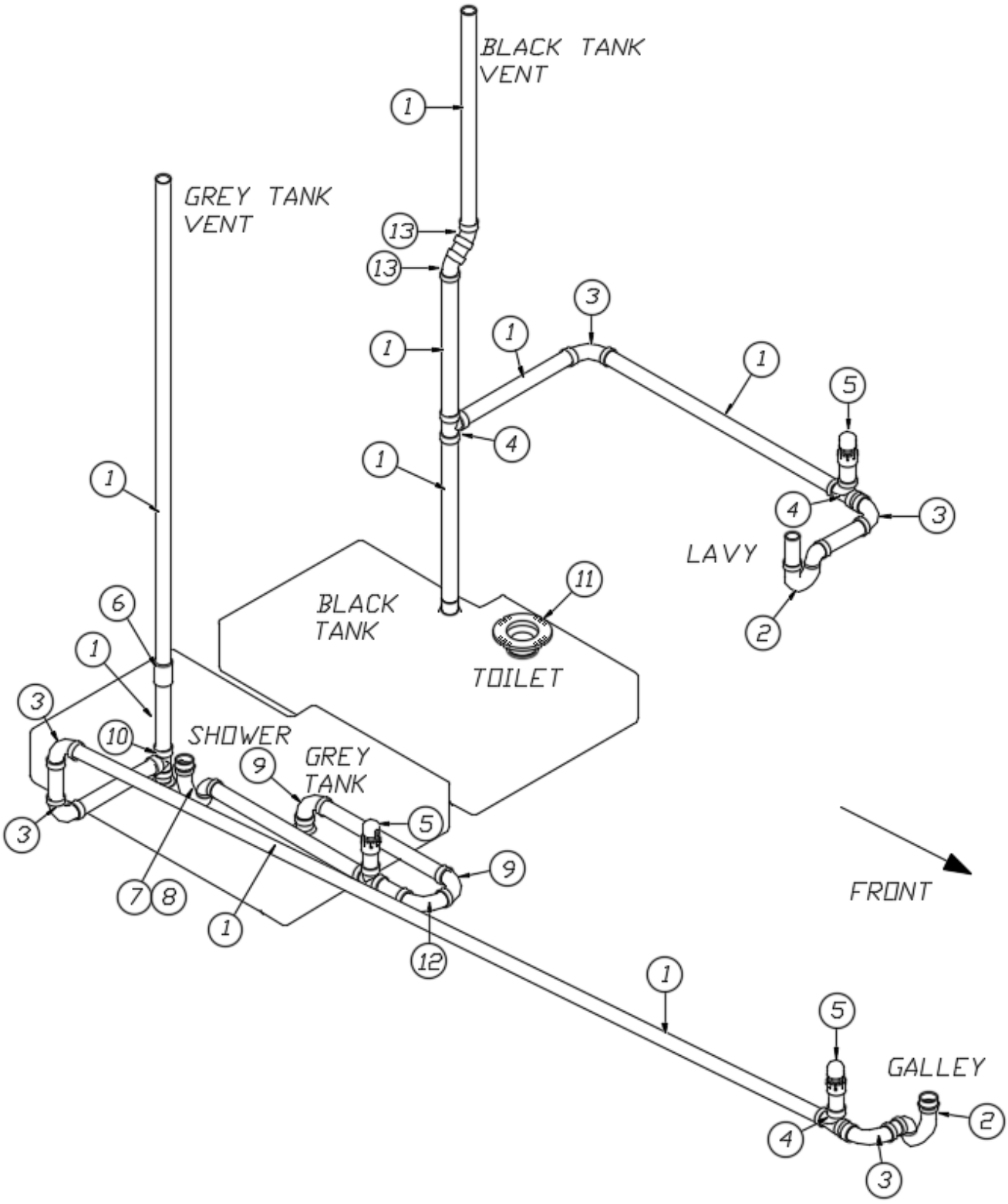

Parts Listed on Next Page

Drain, Above Floor, 30’

	943722	Above Floor Drain System
1.	601160-02	Pipe, ABS DWG, 1.5”
2.	600622	P-trap, 1.5” w/slip nut & washer
3.	600035	Ell, ABS long sweep, 1.5
4.	600156	Tee, Sanitary
5.	602306	Valve, 2” air admittance
6.	600227	Coupling, 1.5”
7.	602164-01	P-trap w/compression nut, 1.5"
8.	602164-02	Tailpiece w/nuts & washers, 1.5”
9.	600662	Elbow, 1.5”, 90°, Short radius
10.	601868	Sanitary tee
11.	600065	Floor flange, Threaded
12.	600431	Elbow, 90°, 1.5”
13.	600030	Ell, ABS, 45°, Long turn
	690700-01	Vent cap cover, White

2018 INTERNATIONAL
PLUMBING, DRAIN

Tank Drain, 23CB, 23FB

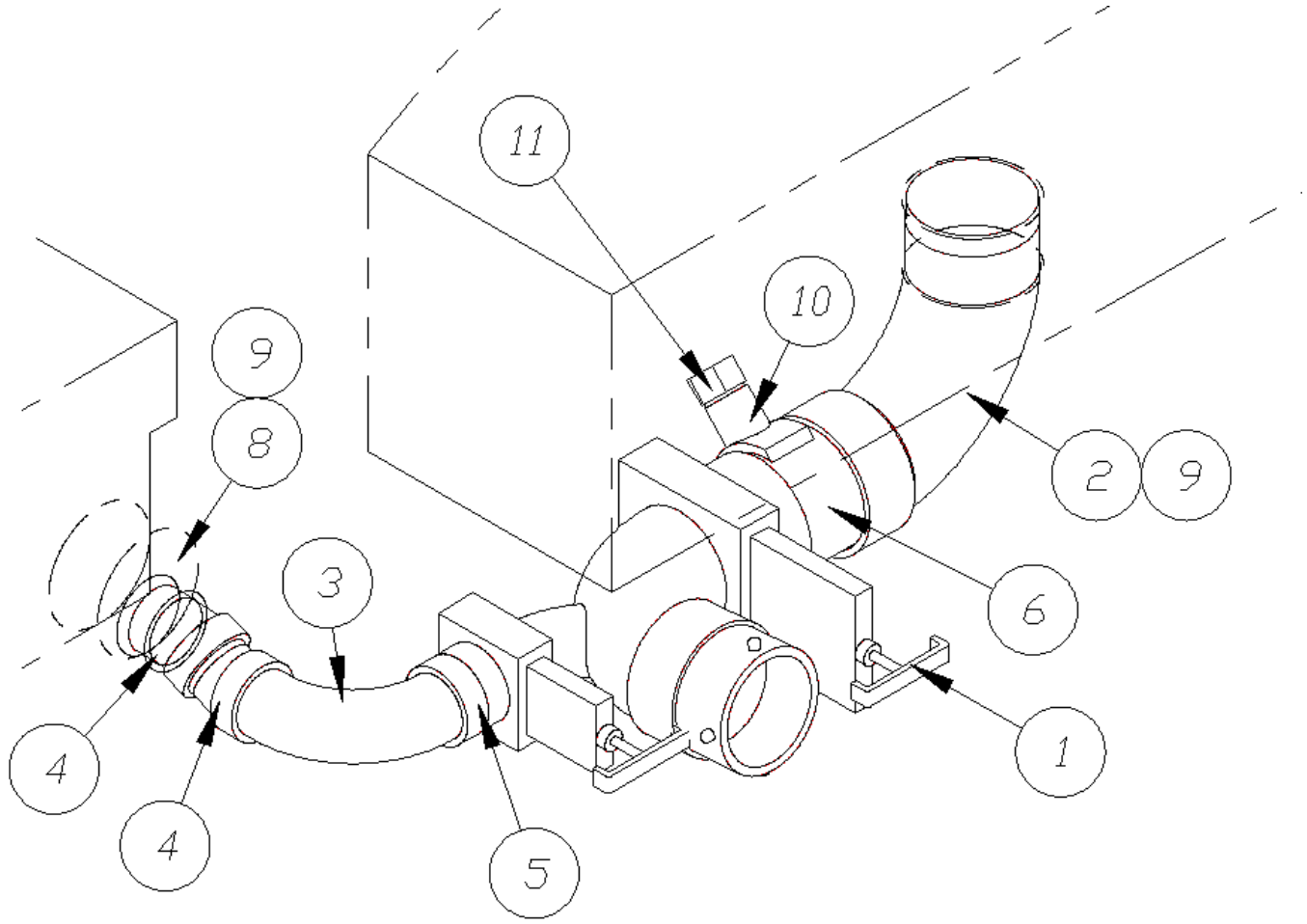

	943574	Tank Drain Install
1.	601482	Dump valve rotating assembly
2.	600820	3” single socket, 90°
3.	600431	Elbow, 90°, 1.5”
4.	601800	Street ell, 22.5°, ABS, SPIG x HUB, 1.5"
5.	601160-02	Pipe, ABS DVW, 1.5”-2” long
6.	601160-04	Pipe, ABS DVW, 3”- 4” long
7.	114916	Bracket, Dump valve
8.	195329-229	Reducer adaptor, 3” to 1.5”
9.	340092	Clamp, Worm type
10.	601846	Adaptor, 3" pipe, Catcon
11.	512566	Monitor, Tank system kit, Seelevel
	601854-01	Black tank
	601844-01	Holding tank, Gray

Tank Drain, 25’, 28’

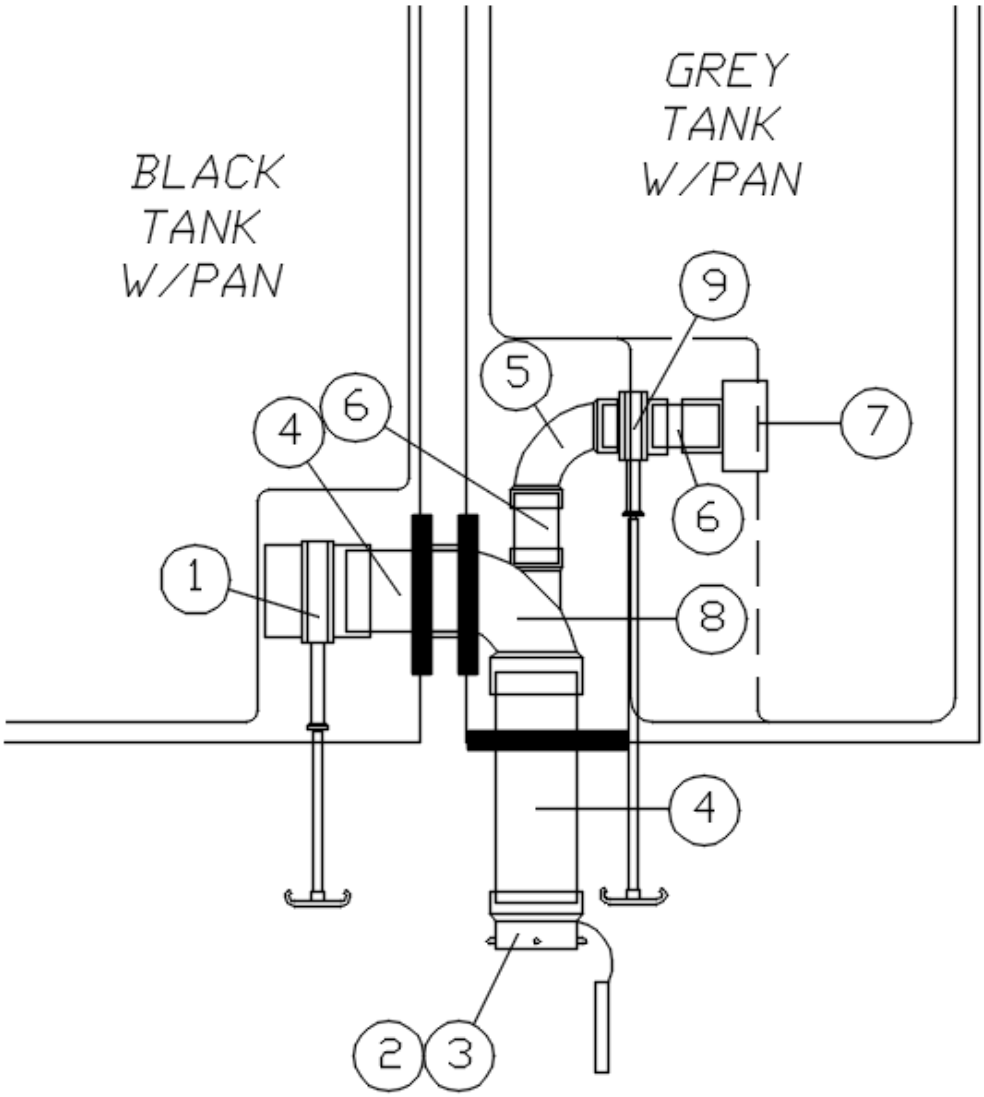

	110541	Tank Drain Install
1.	601607-11	Valve assembly, 3” spigot x 3” spigot
2.	601607-06	Termination adaptor
3.	601607-07	Termination cap
4.	601160-04	Pipe, ABS DVW, 3”
5.	600035	Ell, ABS, Long sweep, 1.5”
6.	601160-02	Pipe, ABS DVW, 1.5”
7.	195329-229	Reducer adaptor, 3” to 1.5”
8.	601716	Ell w/low heel, 90°
9.	601607-12	Valve assembly, 1.5” HUB x 1.5” spigot
	340092	Clamp, Worm type

2018 INTERNATIONAL
PLUMBING, DRAIN

Dump Valve, 25’

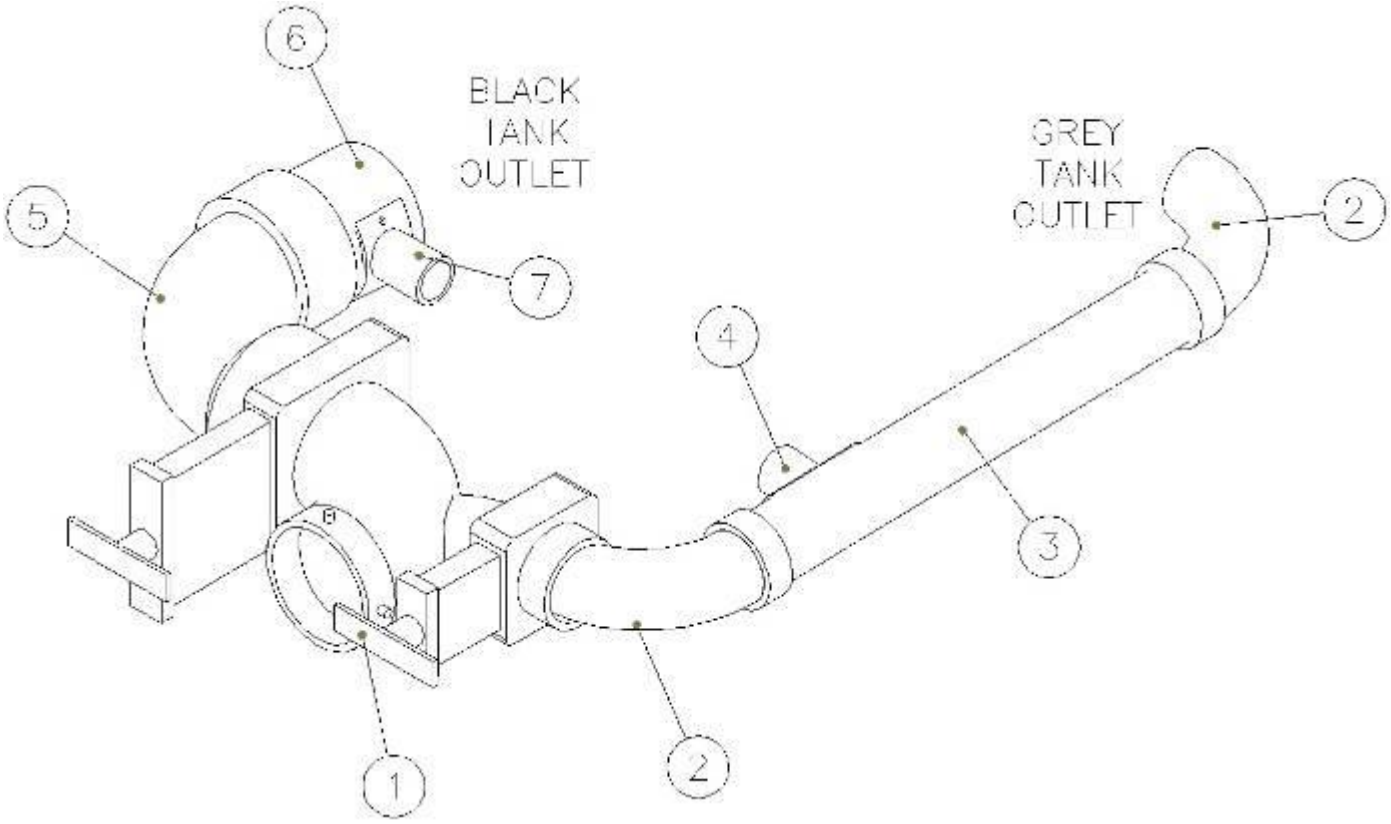

	943741	Dump Valve Assembly
1.	601482	Dump valve rotating assembly
2.	600431	Elbow, 90°, 1.5”
3.	601160-02	Pipe, ABS DVW, 1.5"
4.	601845	Adaptor, 1.5" pipe Catcon
5.	600820	Single socket, 3", 90°
6.	601160-04	Pipe, ABS DVW, 3"
7.	601846	Adaptor, 3" pipe Catcon
	601889-04	Grey tank, 35 gallon
	601890-03	Black tank, 37 gallon
	601895	Pan, Black/Grey tank

Dump Valve, 25FB, 27FB

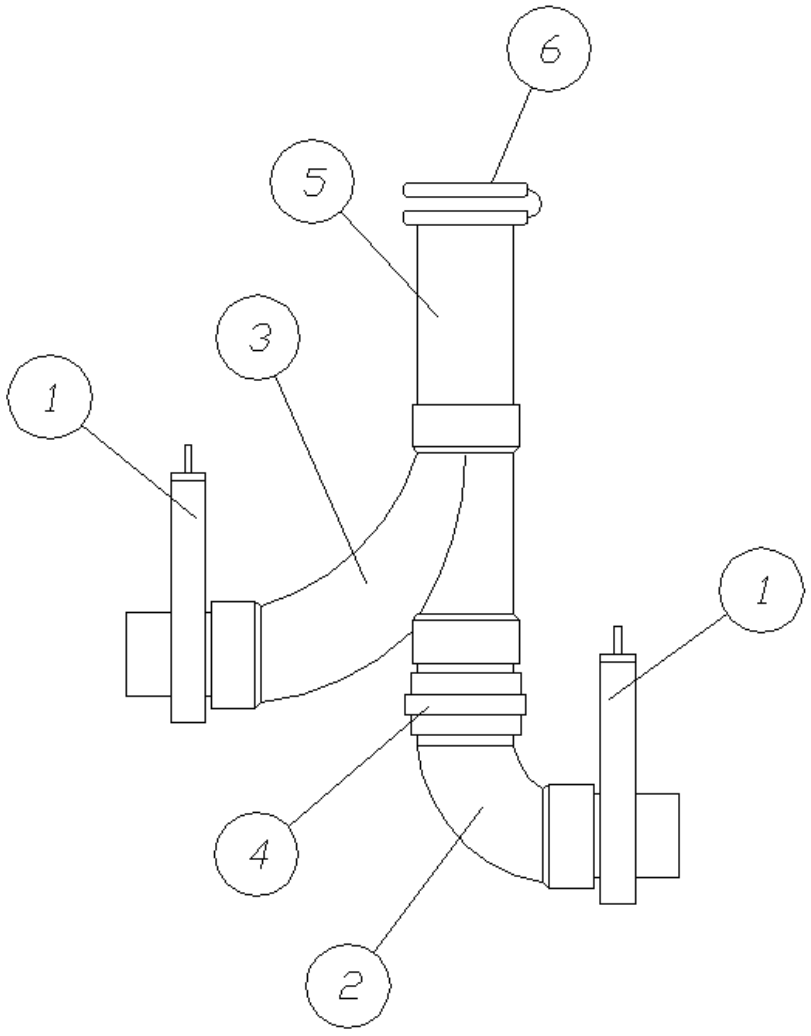

110191	Dump Valve Assembly
1. 601607-11	Valve assembly, 3" spigot x 3" spigot
2. 600820	Single socket, 3", 90°
3. 600187	Wye, 3” combination & 1/8” bend
4. 600289	Calder coupler, 3”
5. 601160-04	ABS pipe, 3”
6. 601607-07	Termination cap
601850-04	Grey tank, 37 gallon, 25FB, 27FB
601848-12	Black tank, 39 gallon, 25FB, 27FB
601626	Pan, Waste tanks

2018 INTERNATIONAL
PLUMBING, DRAIN

Dump Valve, 28’

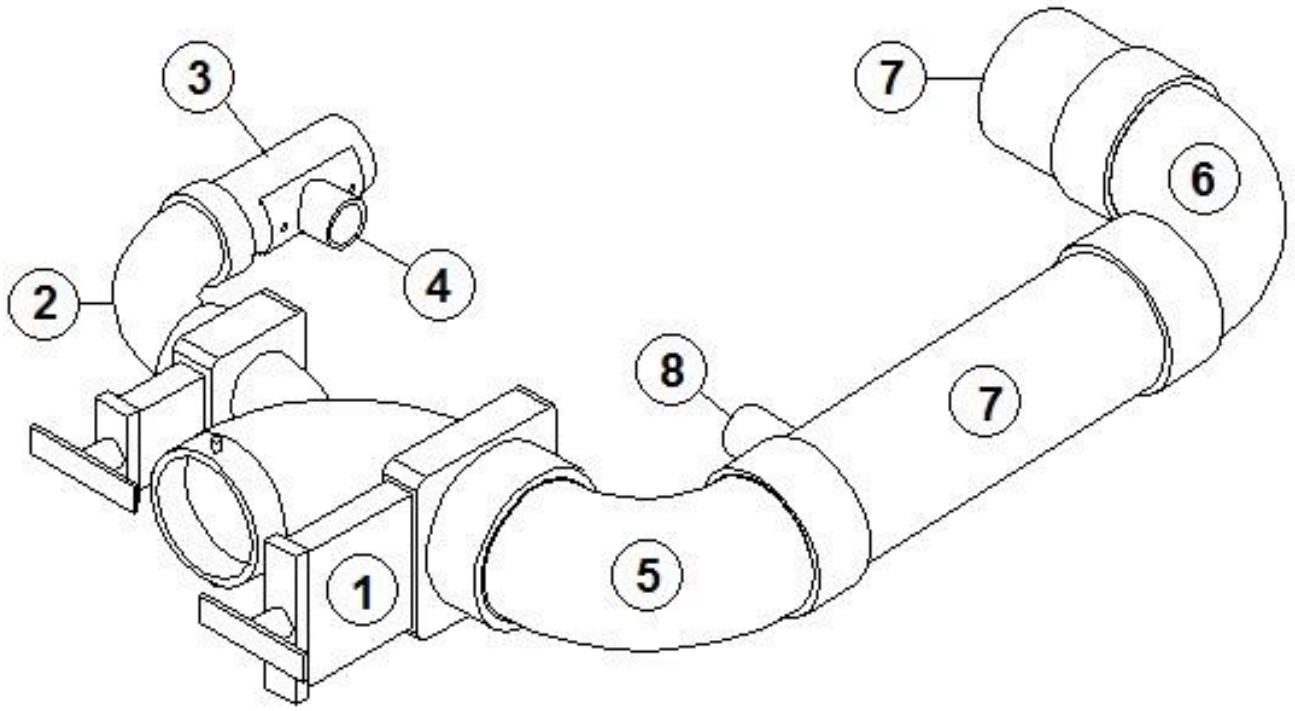

	943621	Dump Valve Assembly
1.	601482	Dump valve rotating assembly
2.	600431	Elbow, 90°, 1.5”
3.	601160-02	Pipe, ABS DVW, 1.5”
4.	601845	Adaptor, 1.5", pipe, Catcon
5.	600820	Single socket, 3", 90°
6.	600183	Ell, long sweep, ABS, 3”
7.	601160-04	Pipe, ABS DVW, 3”
8.	601846	Adaptor, 3" pipe, Catcon
	601889-03	Black tank, 35 gallon
	601890-02	Gray tank, 37 gallon
	601895	Pan, Black/Gray tank
	200954	Slope pad, Holding tanks

2018 INTERNATIONAL
PLUMBING, DRAIN

Dump Valve, 30’

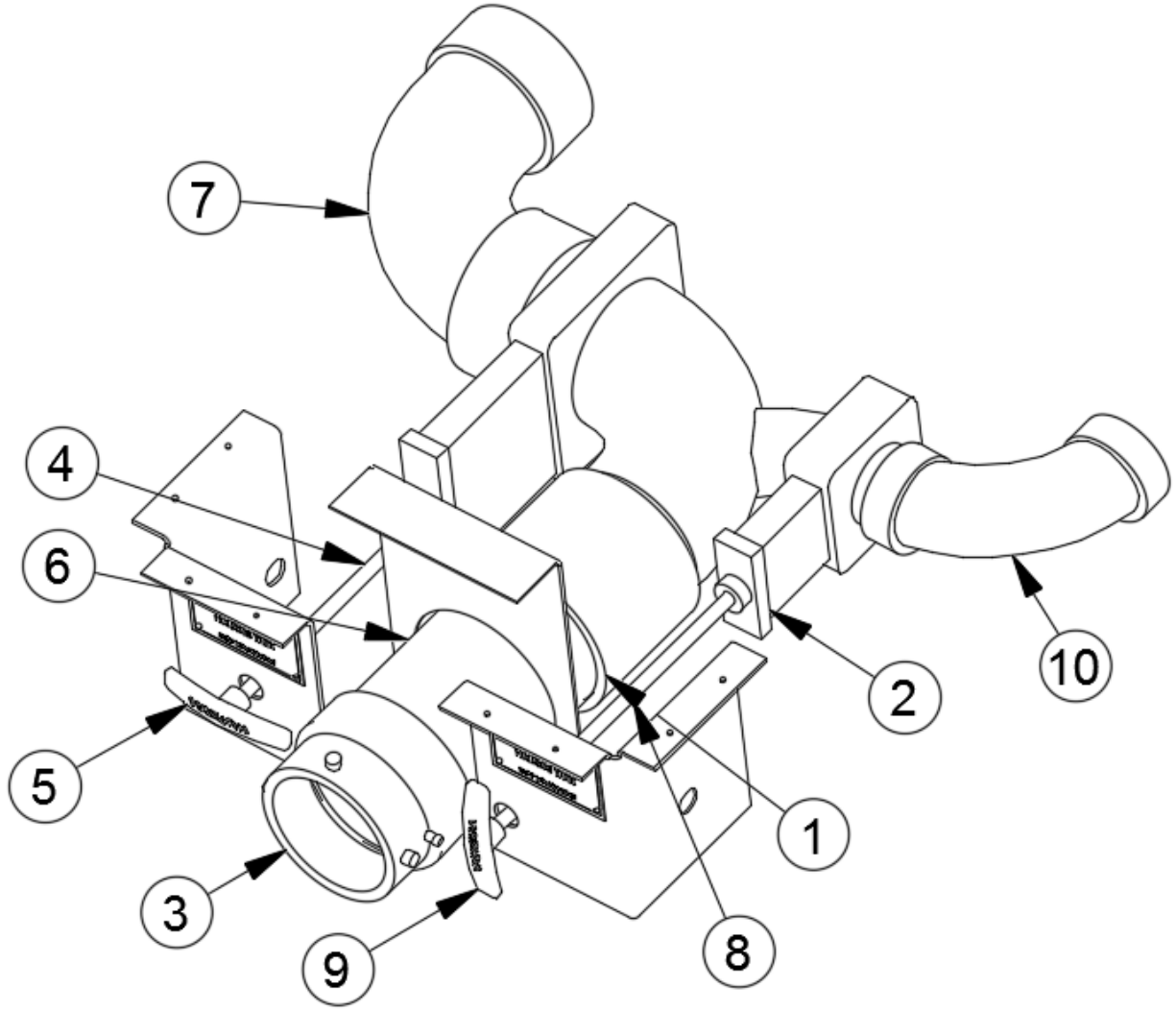

	943720	Dump Valve Assembly
1.	600253	Coupler, 3”
2.	601607-16	Dump valve, No handles
3.	601607-06	Termination adaptor
4.	601607-19	Threaded extension, 6”
5.	601607-17	Black tank handle
6.	601160-04	Pipe, ABS DWV, 3”
7.	600820	Single socket, 3", 90°
8.	601607-20	Threaded extension, 8”
9.	601607-18	Grey tank handle
10.	600035	Elbow, 90°, Long sweep
	602245-01	Black tank, 39.3 Gallon
	602245-02	Grey tank, 39.3 Gallon

Sinks and Shower, 23CB

601806	Galley sink, Round, SS
601804-01	Lavy sink, 12" round, SS
601813	Tail piece, Lift and turn drain
203483	Sink cover, Round, 17.75", Natural
702937-06	Shower door, Roll away, 62 x 36, White
203114-02	Shower, 2 piece fiberglass, White

Sinks and Shower, 23FB

601806	Galley sink, Round, SS
601804-01	Lavy sink, 12" round, SS
601813	Tail piece, Lift and turn drain
203483	Sink cover, Round, 17.75", Natural
703911-02	Shower door w/travel latch, 22 x 65, Brown
203615	Shower stall
203692	Shower base, Fiberglass

Sinks and Shower, 25’

601806	Galley sink, Round, SS
601804-01	Lavy sink, 12" round, SS
203483	Sink cover, Round, 17.75", Natural
203081-01	Shower stall, 2 piece fiberglass, White
703911-01	Shower door, Brushed Nickel

Sinks and Shower, 25FB, 27FB

601806	Galley sink, Round, SS
601804-01	Lavy sink, 12" round, SS
203483	Sink cover, Round, 17.75", Natural
203081-02	Shower stall, 2 piece fiberglass, White
703911-01	Shower door, Brushed Nickel

Sinks and Shower, 28’, 30’

601806	Galley sink, Round, SS
601804-01	Lavy sink, 12" round, SS
203483	Sink cover, Round, 17.75", Natural
203081-01	Shower stall, 2 piece fiberglass, White
703911-01	Shower door, Brushed Nickel

Toilet Flange

601266	Flange, 3 x 4, Slip fit

Black Tank Flush

601441-02	Black tank flush
601392-01	Plastic screw in cap

Drain Fittings

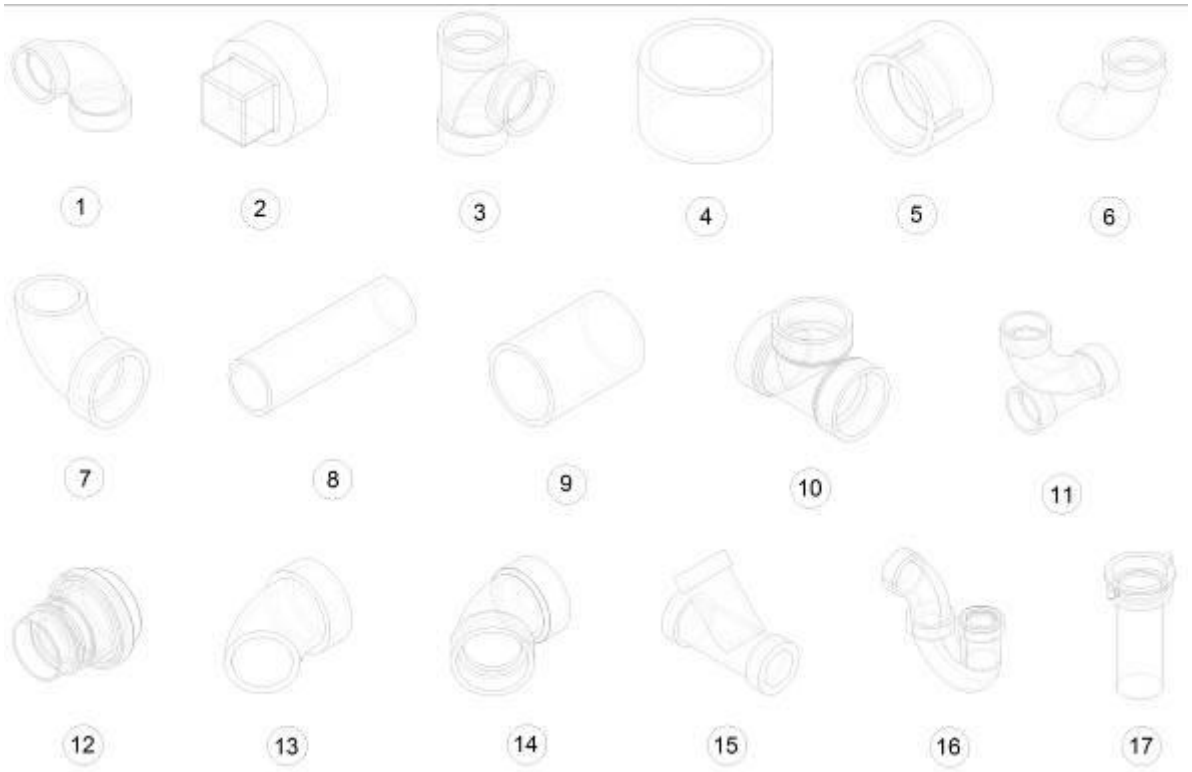

1.	600035	Elbow, 1.5”, 90°, Long sweep
2.	600155	Plug, 1.5”
3.	600156	Tee, Sanitary
4.	600227	Coupling, 1.5”
5.	600308	Adapter, ABS
6.	600431	Elbow, 90°, long street
7.	600662	Elbow, 1.5”, 90°, Short radius
8.	601160-02	Pipe, ABS DVW, 1.5”
9.	601160-04	Pipe, ABS DVW, 3”
10.	601318	Tee, Bi-directional clean out, 1.5”
11.	600182	Wye, 1.5”, 1/8” bend
12.	602306	Valve, Air admittance, 2”
13.	600027	Elbow, ABS, Long St, 45°
14.	600030	Elbow, ABS, 45°, Long turn
15.	600094	Wye
16.	602164-01	P-trap w/compression nut, 1.5"
17.	602164-02	Tailpiece w/nuts & washers, 1.5”
	600622	P-trap w/slip nut & washer, 1.5”
	600378	Continuous waste, 1.5”
	601868	Sanitary tee
	602185-01	Drain valve, 90° turn, Lead free

2018 INTERNATIONAL
PLUMBING, TOILET

Toilet, 23CB, 23FB

602334	Toilet, Thetford Aqua Magic Style II China
601266	Toilet flange, 3” x 4”, Slip fit
602137	Shut off valve

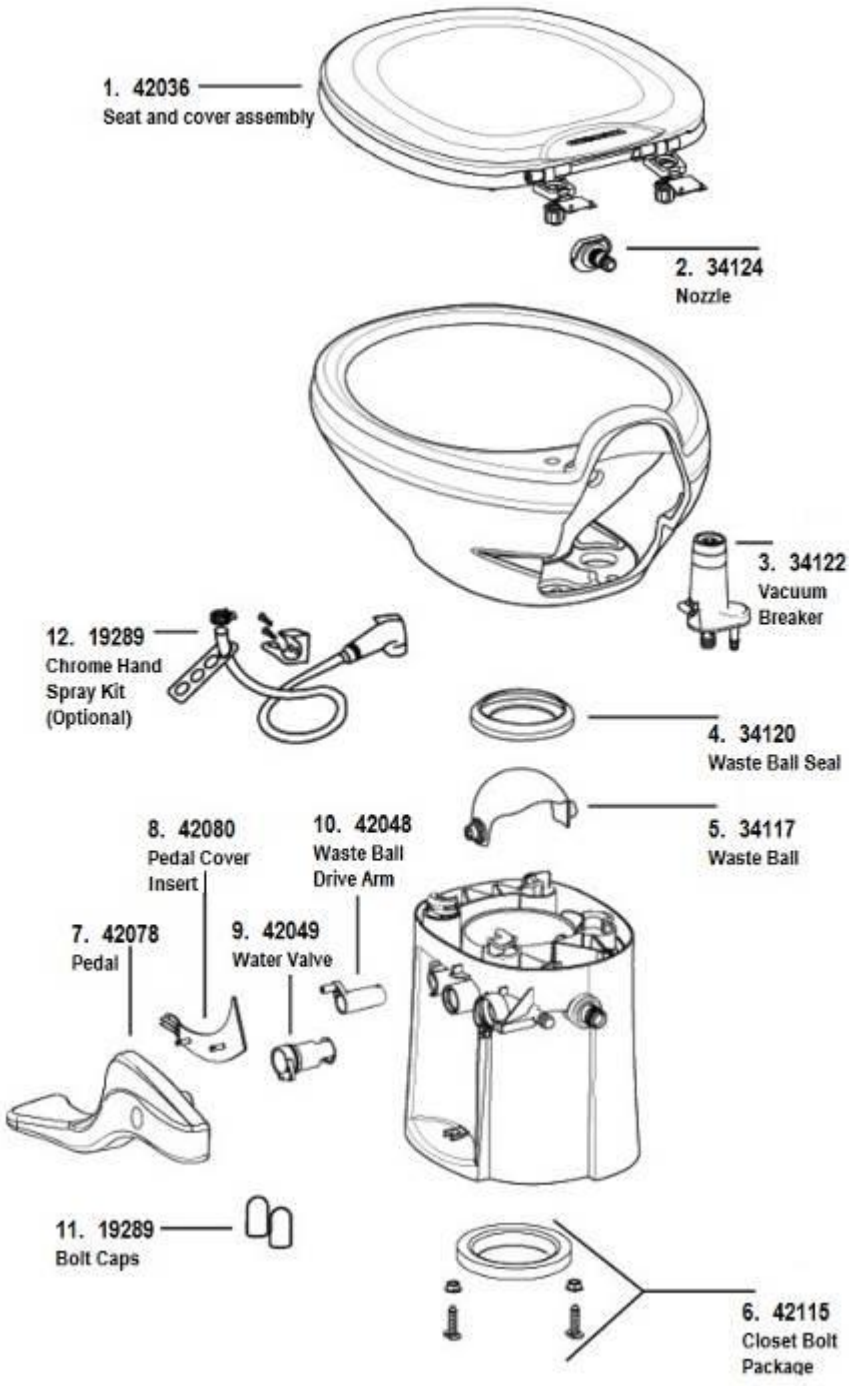

Parts listed are Thetford part numbers

2018 INTERNATIONAL
PLUMBING, TOILET

Toilet, 25’, 25FB, 27FB, 28’, 30’

690621	Toilet, China, Dometic
601266	Toilet flange, Slip fit
602137	Shut off valve

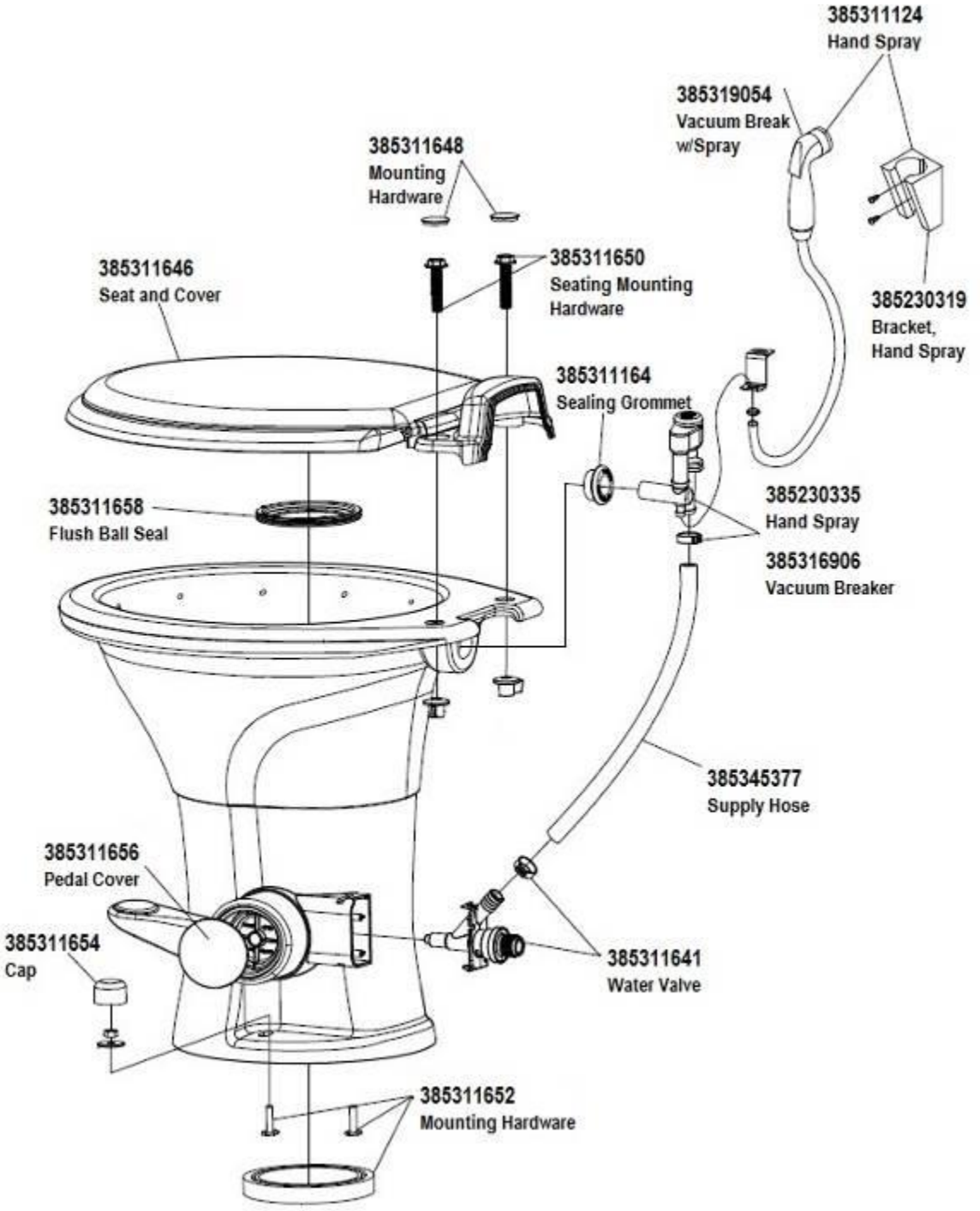

Parts listed are Dometic part numbers

2018 INTERNATIONAL
SEALERS AND GASKETS

Sealers

360002	Sealant, Vulkem, 11.5 oz. tube
360209	Sealant, Seam
360176	Sealant, Almond
360180	Sealant, Sika-Flex, Gray
365330-01	Sealant, RTV silicone, White
365330-02	Sealant, RTV silicone, Gray
365330-03	Sealant, RTV silicone, Aluminum Gray
365330-04	Sealant, RTV silicone, Black
365330-05	Sealant, RTV silicone, Self-level, White
365233-01	Sealant, 100% silicone, Clear
360255-04	Sealant, Anti-wick
28433W	Walbernize Super Seal
28430W-01	Sealant, Acryl-R, Gray, 16 oz. can
28430W-04	Sealant, Acryl-R, White, 16 oz. can
28430W-06	Sealant, Acryl-R, Clear, 16 oz. can

Gaskets

365013-01	Gasket, Screen Door
365035	Gasket, Access door jamb
365232	Gasket, Main door
382117	Gasket, Window seal
365208	Gasket, Window frame to glass
365016	Tape, Foam, Double face, .5” wide
685510	Seam tape, Rubber, Black
685510-01	Seam tape, Exterior metal, Rubber, .5”, Black
365001	Tape, Double coated foam
381830	Gasket wiper, L-section, 1.12” x 20”
382074	Gasket, Main door grab handle
512477	Gasket, Neoprene, 1/8” thick, Black
365367	Automotive foam tape
382614	Awning Upper Bracket Gasket kit, sheet of 10

Gasket Kits

365336 Gasket Kit #1, not sold separately:

Exterior shower gasket, 1 Ea.
City water fill gasket, 1 Ea.
Step light gasket, 1 Ea.
Awning lockdown (AS5 & AS7 Kit), 4 Ea.
Lower awning foot (AS7 Kit), 4 Ea.
Awning foot (Rear W/Pan Kit), 4 Ea.
Lower awning foot (AS5 Kit), 4 Ea.

365337 Gasket Kit #2, not sold separately:

Small furnace exhaust/intake, 1 Ea.
Gravity water fill, 1 Ea.
Range vent gasket, 1 Ea.
Awning lockdown (LW7 Kit), 4 Ea.
Awning classic center post, 4 Ea.
AEU BBQ point, 1 Ea.
AEU upper indicator light, 2 Ea.
AEU city water hookup, 1 Ea.

365338 Gasket Kit #3, not sold separately:

Scare light domestic units, 1 Ea.
Black tank flush gasket, 1 Ea.
Awning travel latch gasket, 4 Ea.
AEU fog/backup lamp housing, 2 Ea.
AEU fog/backup lamp bezel, 2 Ea.
Scare light AEU units, 1 Ea.
Awning hook gasket, 4 Ea.
Awning prop foot gasket, 4 Ea.

Pillow Kits, Signature

703678-UL	Pillow kit, Espresso and Oyster
703678-ULS	Pillow kit, Salsa
703987	Pillow, Bed plump poly fill

Pillow Kits, Serenity

703849-04	Pillow kit, 23CB, 25', 25FB, 27FB, 28', 30'
703849-05	Pillow kit, 23FB
703849-01	Pillow, 16 x 16
703849-02	Pillow, 20 x 12
703849-03	Pillow, 18 x 18
703987	Pillow, Bed plump poly fill

Sheet Set and Mattress Pad, 23FB A2GO

704029	Custom sheet set
704035	Sheet, Flat
704031	Mattress pad, Waterproof
704036	Pillow case, Queen 600TC, Dove White
703987	Pillow, Bed plump poly fill

Sheet Set and Mattress Pad, 28' A2GO

704030	Custom sheet set
704035	Sheet, Flat
704032	Mattress pad, Waterproof
704036	Pillow case, Queen 600TC, Dove White
703987	Pillow, Bed plump poly fill

2018 INTERNATIONAL
BEDDING, MATTRESSES

Mattress and Bedspread, 23CB

704129	Mattress, Pillowtop, Foam core, 48” x 76”, Corner double
704502	Bedspread, Corner

Mattress and Bedspread, 23FB

704131	Mattress, Pillowtop, 60” x 75”, Queen
704503	Bedspread, Queen

Mattress and Bedspread, 25’, 25FB

704131	Mattress, Pillowtop, 60” x 75”, Queen
704503	Bedspread, Queen
704130-01	Mattress, CS twin, Pillow top, 34 x 80
704130-02	Mattress, RS twin, Pillow top, 34 x 80
704501	Bedspread, Twin

Mattress and Bedspread, 27FB, 28’, 30’

704132	Mattress, Pillowtop, 60” x 75”, Queen
704503	Bedspread, Queen
704130-01	Mattress, CS twin, Pillow top, 34 x 80
704130-02	Mattress, RS twin, Pillow top, 34 x 80
704501	Bedspread, Twin

2018 INTERNATIONAL
UPHOLSTERY, FOAM, ULTRALEATHER

Dinette Cushions, 23CB

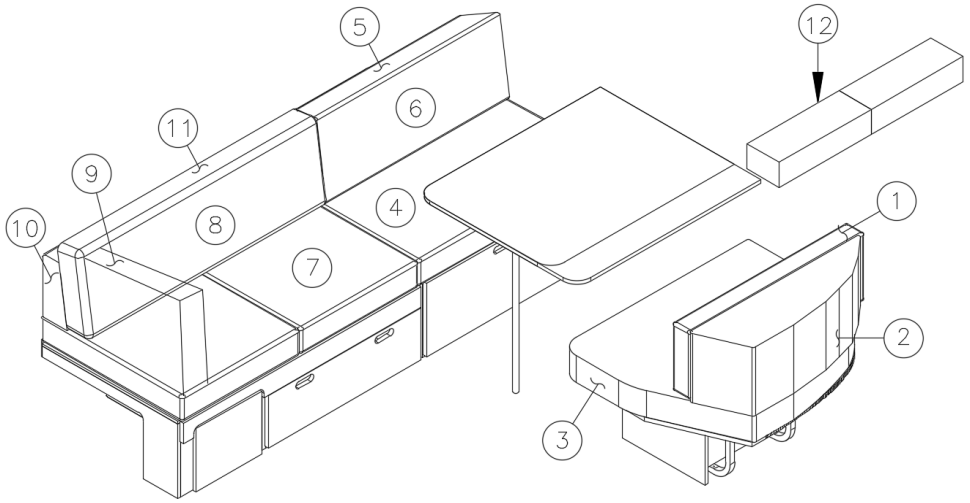

	703883BR	Kit, Din/Lnge Cushions, Ultraleather, Espresso
	703883OY	Kit, Din/Lnge Cushions, Ultraleather, Oyster
	703883R	Kit, Din/Lnge Cushions, Ultraleather, Salsa
	703682	Kit, Foam
1.	703883x-03	CS back rest
	703682-03	Foam, CS back rest
2.	703883x-02	CS filler wedge
	703682-02	Foam, CS filler wedge
3.	703883x-01	CS dinette seat
	703682-01	Foam, CS dinette seat
4.	703883x-04	RS dinette seat
	703682-04	Foam, RS dinette seat
5.	703883x-05	RS filler wedge
	703682-05	Foam, RS filler wedge
6.	703883x-06	RS back rest
	703682-06	Foam, RS back rest
7.	703883x-08	Lounge bottom cushions
	703682-08	Foam, Lounge bottom cushions
8.	703883x-09	Lounge back rest
	703682-09	Foam, Lounge back rest
9.	703883x-10	Side armrest
	703850	Foam, Side armrest
10.	703883x-11	Filler lounge/bed wedge, 40”
	703682-10	Foam, Lounge/bed wedge, 40”
11.	703883x-12	Filler lounge wedge, 26”
	703682-11	Foam, Lounge wedge, 26”
12.	703883x-13	Bed filler
	703682-12	Foam, Bed filler

*Substitute “BR”, “OY”, or “R” for “X” when ordering Ultraleather

2018 INTERNATIONAL
UPHOLSTERY, FOAM, ULTRALEATHER

Dinette Cushions, 23FB

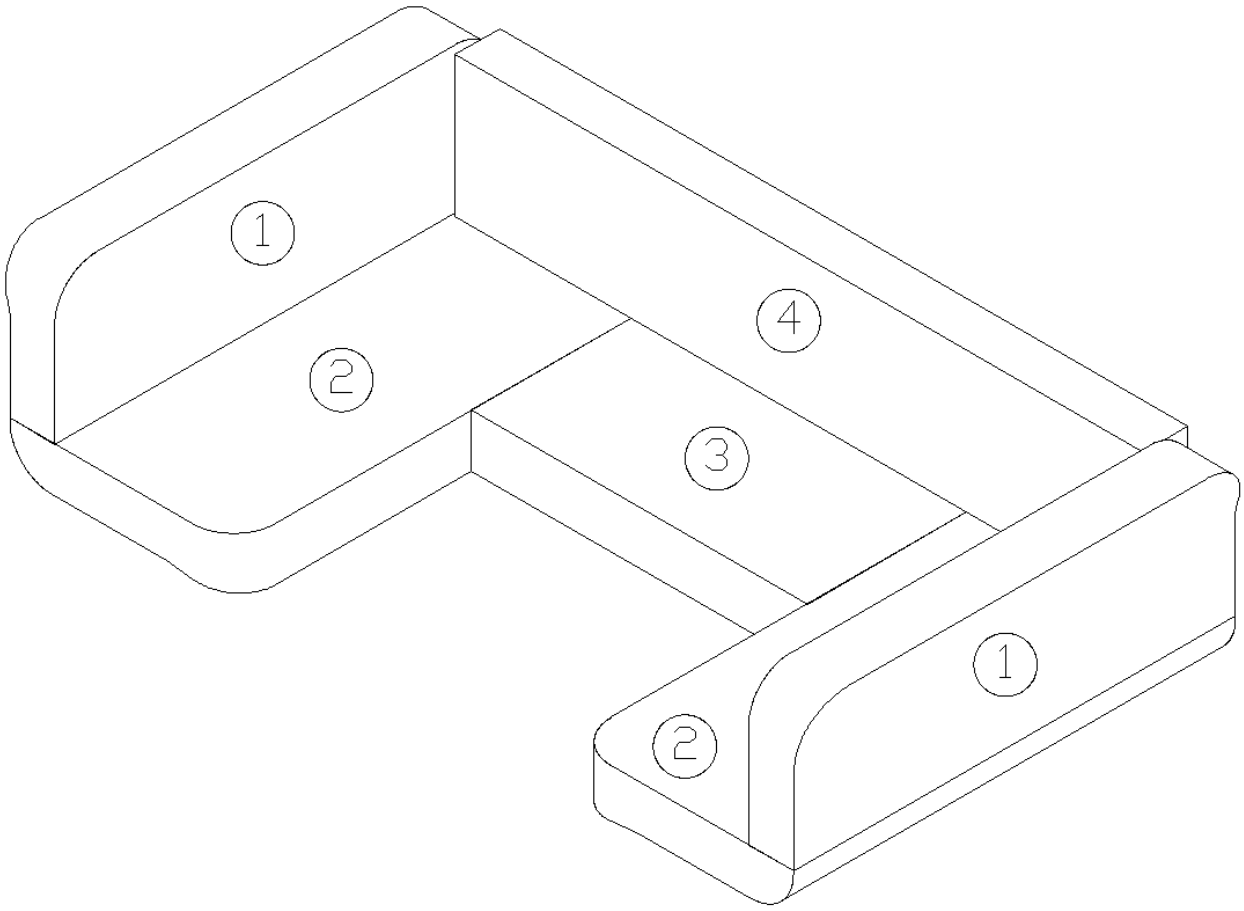

	704052BR	Kit, U-Dinette, Ultraleather, Espresso
	704052OY	Kit, U-Dinette, Ultraleather, Oyster
	704052R	Kit, U-Dinette, Ultraleather, Salsa
	704052-100	Kit, Foam
1.	704052x-01	CS/RS back cushions
2.	704052x-02	CS/RS bottom cushions
3.	704052x-03	Center seat cushion
4.	704052x-04	Center back cushion

*Substitute “BR”, “OY”, or “R” for “X” when ordering Ultraleather

2018 INTERNATIONAL
UPHOLSTERY, FOAM, ULTRALEATHER

Dinette Cushions, 25’

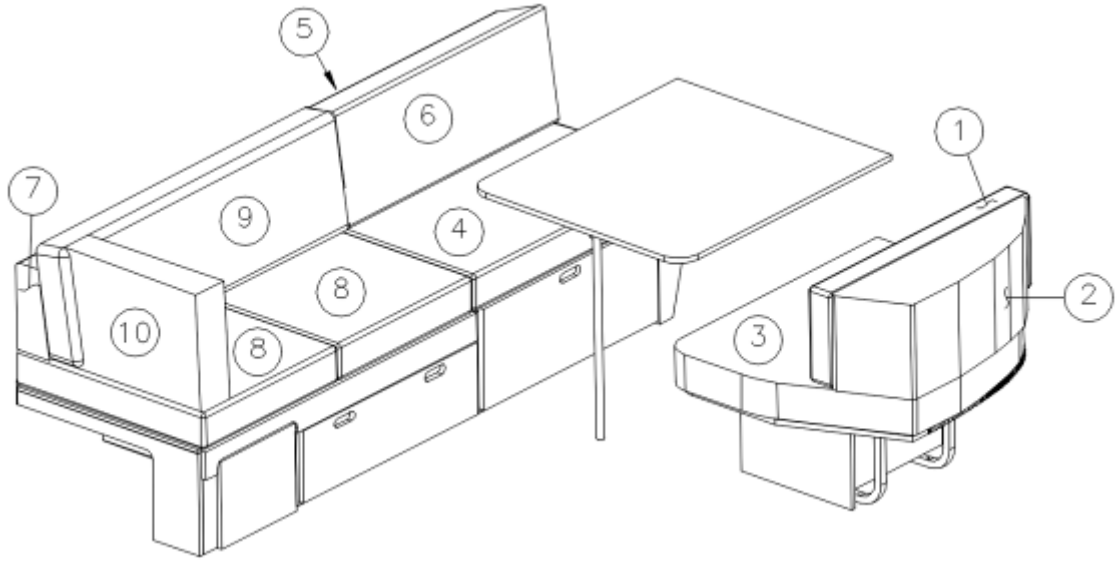

	703946BR	Kit, Sofa/Dinette Cushions, Ultraleather, Espresso
	703946OY	Kit, Sofa/Dinette Cushions, Ultraleather, Oyster
	703946R	Kit, Sofa/Dinette Cushions, Ultraleather, Salsa
	703942	Kit, Foam
1.	703946x-01	CS backrest
	703942-03	Foam, CS backrest
2.	703946x-02	CS wedge filler
	703942-02	Foam, CS wedge filler
3.	703946x-03	CS dinette seat
	703942-01	Foam, CS dinette seat
4.	703946x-04	RS dinette seat
	703942-04	Foam, RS dinette seat
5.	703946x-05	RS wedge filler
	703942-05	Foam, RS wedge filler
6.	703946x-06	RS backrest
	703942-06	Foam, RS backrest
7.	703946x-07	Lounge wedge filler
	703942-07	Foam, Lounge wedge filler
8.	703946x-08	Lounge seat cushions
	703942-08	Foam, Lounge seat cushions
9.	703946x-09	Lounge backrest
	703942-09	Foam, Lounge backrest
10.	703946x-10	Side armrest
	703850	Foam, Side Armrest

*Substitute “BR”, “OY”, or “R” for “X” when ordering Ultraleather

2018 INTERNATIONAL
UPHOLSTERY, FOAM, ULTRALEATHER

Dinette Cushions, 25FB, 27FB

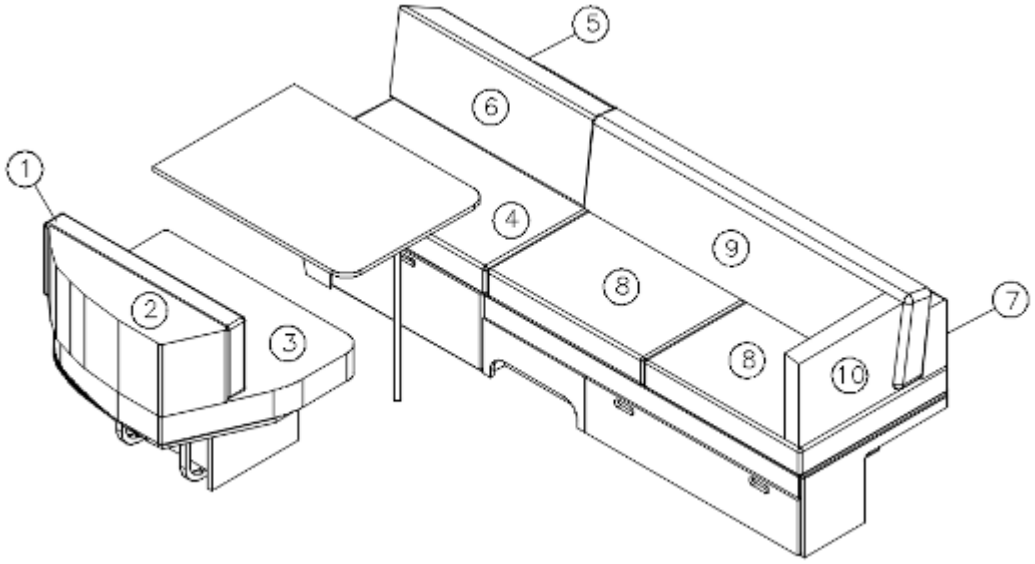

	703884BR	Kit, Sofa/Dinette Cushions, Ultraleather, Espresso
	703884OY	Kit, Sofa/Dinette Cushions, Ultraleather, Oyster
	703884R	Kit, Sofa/Dinette Cushions, Ultraleather, Salsa
	703486	Kit, Foam
1.	703884x-01	CS backrest
	703486-01	Foam, CS backrest
2.	703884x-02	CS filler wedge
	703486-02	Foam, CS filler wedge
3.	703884x-03	CS dinette seat
	703486-03	Foam, CS dinette seat
4.	703884x-04	RS dinette seat
	703486-04	Foam, RS dinette seat
5.	703884x-05	RS filler wedge
	703486-05	Foam, RS filler wedge
6.	703884x-06	RS backrest
	703486-06	Foam, RS backrest
7.	703884x-07	Lounge filler piece
	703486-07	Foam, Lounge filler piece
8.	703884x-08	Lounge bottom cushions
	703486-08	Foam, Lounge bottom cushions
9.	703884x-09	Lounge backrest
	703486-09	Foam, Lounge backrest
10.	703884x-10	Side armrest
	703850	Foam, Side armrest

*Substitute “BR”, “OY”, or “R” for “X” when ordering Ultraleather

2018 INTERNATIONAL
UPHOLSTERY, FOAM, ULTRALEATHER

Dinette Cushions, 28’, 30’

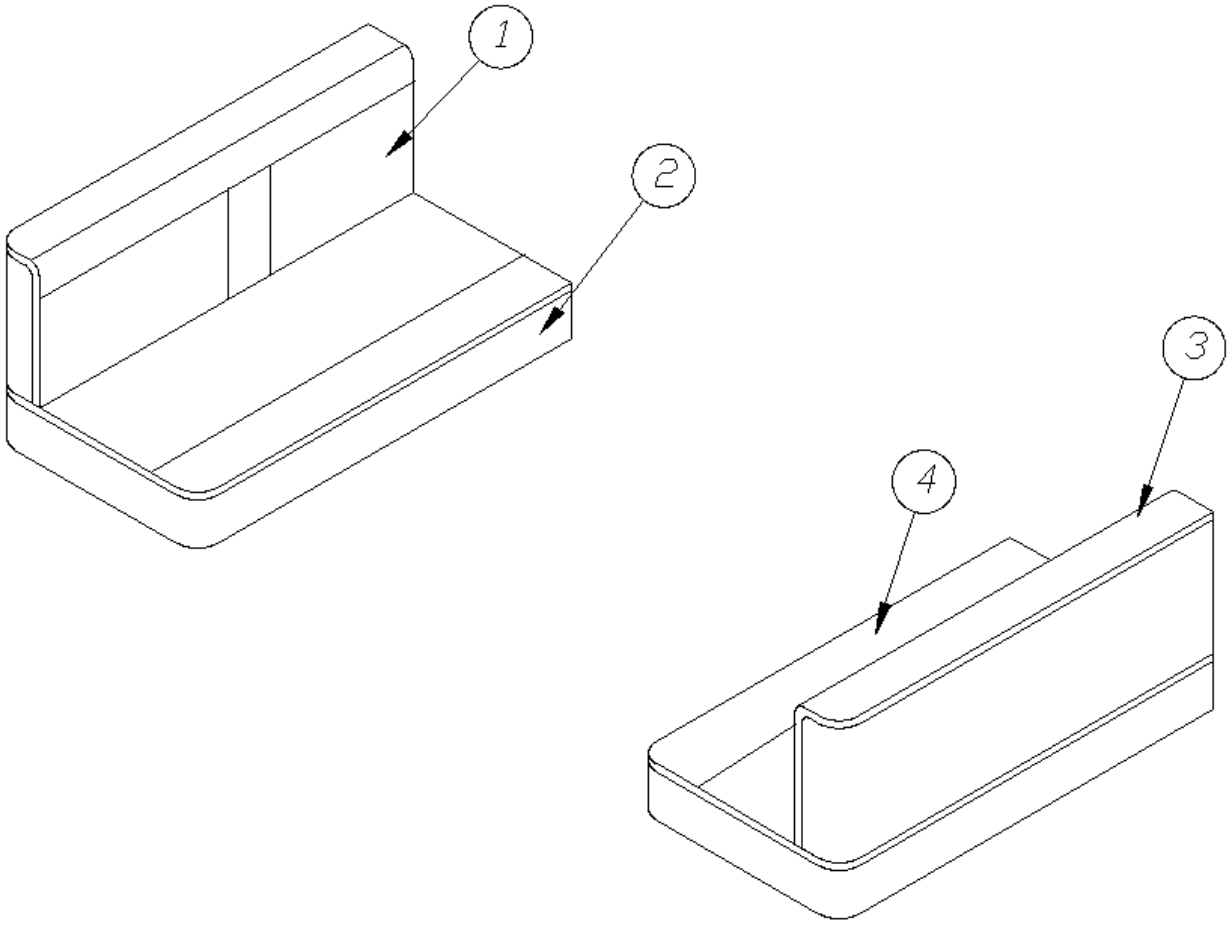

703886BR	Kit, Dinette Seat Cushions, Ultraleather, Espresso
703886OY	Kit, Dinette Seat Cushions, Ultraleather, Oyster
703886R	Kit, Dinette Seat Cushions, Ultraleather, Salsa

1.	703886x-01	Backrest
2.	703886x-02	Seat cushion
3.	703886x-03	Backrest
4.	703886x-04	Seat cushion

*Substitute “BR”, “OY”, or “R” for “X” when ordering Ultraleather

2018 INTERNATIONAL
UPHOLSTERY, FOAM, ULTRALEATHER

L-Lounge Cushions, 28’

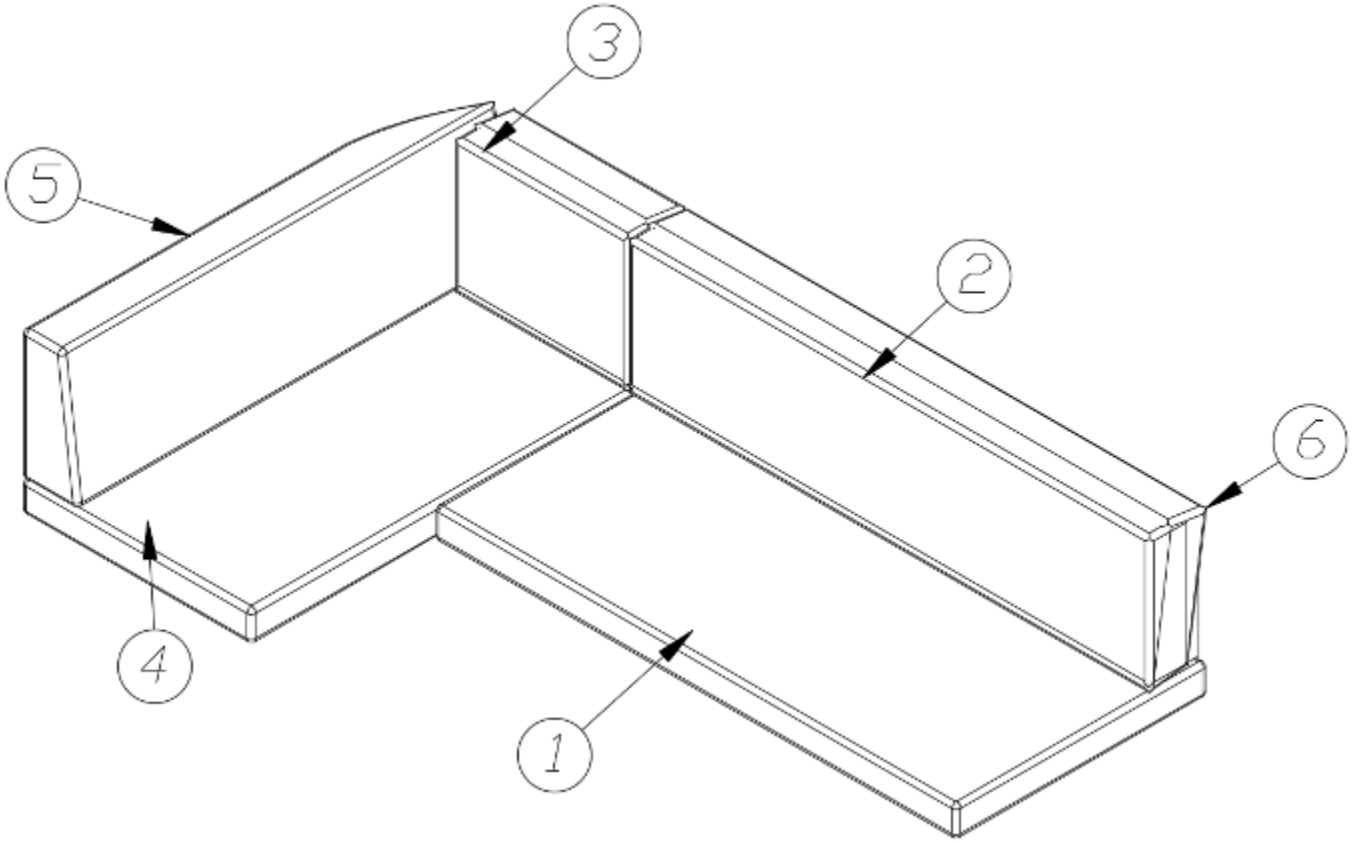

	703885BR	Kit, L-Lounge Cushions, Ultraleather, Espresso
	703885OY	Kit, L-Lounge Cushions, Ultraleather, Oyster
	703885R	Kit, L-Lounge Cushions, Ultraleather, Salsa
	703340	Kit, Foam
1.	703885x-01	Captains bottom cushion
	703340-01	Foam, Captains bottom cushion
2.	703885x-02	Captains back cushion
	703340-02	Foam, Captains back cushion
3.	703885x-03	Small back cushion
	703340-03	Foam, Small back cushion
4.	703885x-04	Base side cushion
	703340-04	Foam, Base side cushion
5.	703885x-05	Side backrest cushion
	703340-05	Foam, Side backrest cushion
6.	703885x-06	Wedge
	703340-06	Foam, Wedge

*Substitute “BR”, “OY”, or “R” for “X” when ordering Ultraleather

2018 INTERNATIONAL
UPHOLSTERY, FOAM, ULTRALEATHER

L-Lounge Cushions, 28’ A2GO

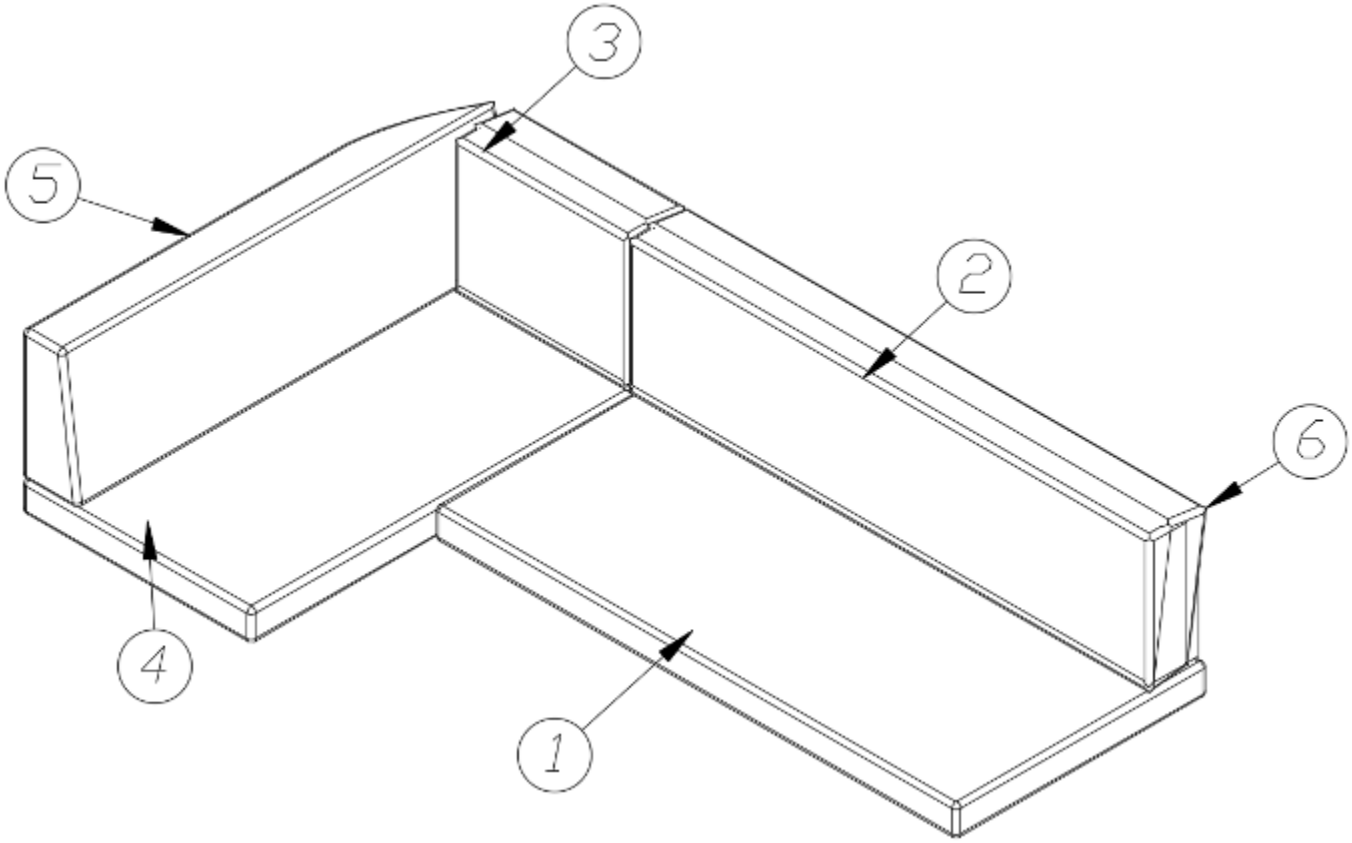

	704027	Kit, L-Lounge Cushions, Ultraleather, Fudge
	703340	Kit, Foam
1.	704027-01	Seat cushion, Forward
	703340-01	Foam, Seat cushion, Forward
2.	704027-02	Backrest, Forward
	703340-02	Foam, Backrest, Forward
3.	704027-03	Small backrest, Forward
	703340-03	Foam, Small backrest, Forward
4.	704027-04	Seat cushion, Side
	703340-04	Foam, Seat cushion, Side
5.	704027-05	Backrest, Side
	703340-05	Foam, Backrest, Side
6.	704027-06	Wedge
	703340-06	Foam, Wedge

2018 INTERNATIONAL
UPHOLSTERY, FOAM, ULTRALEATHER

L-Lounge Cushions, 30’

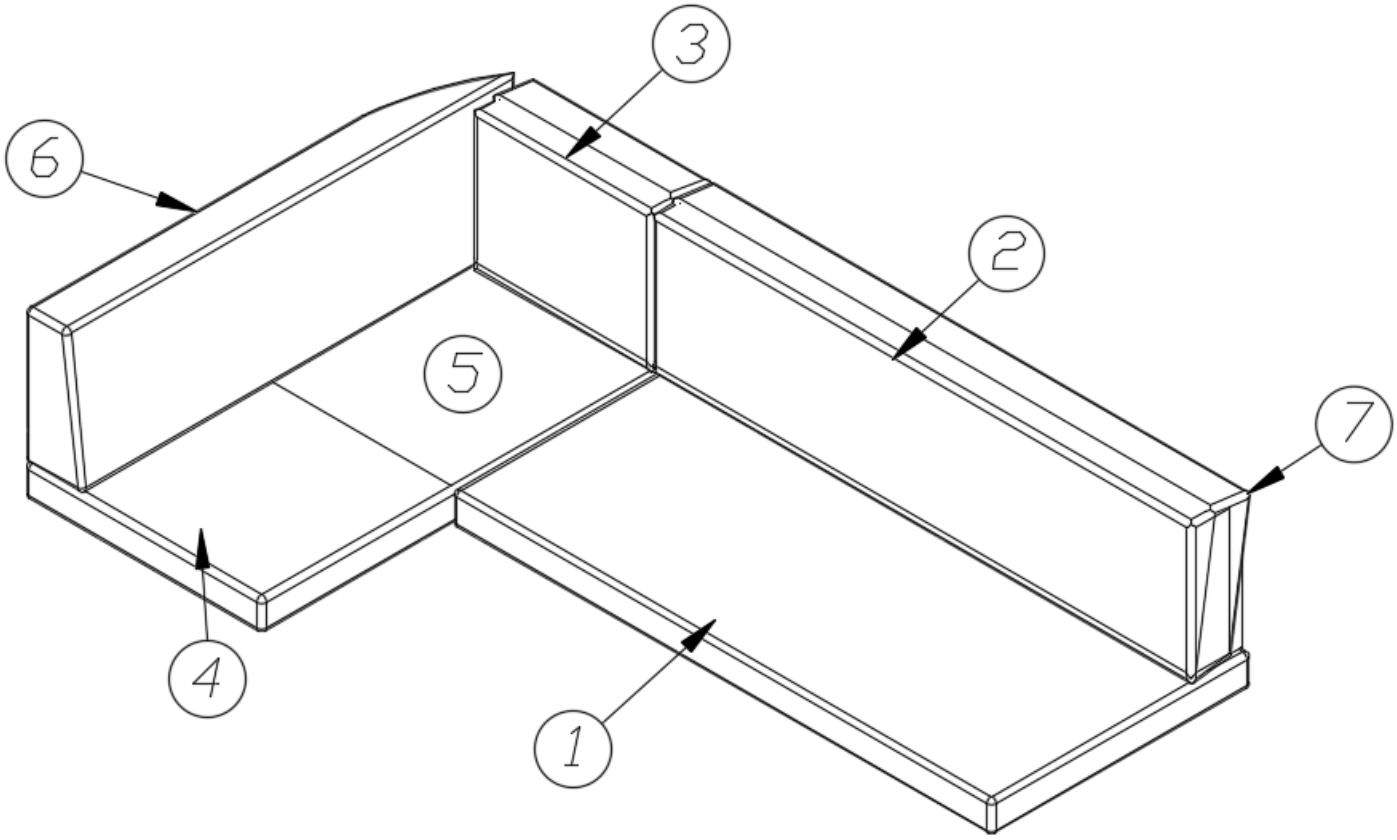

703909BR	Kit, L-Lounge Cushions, Ultraleather, Espresso
703909OY	Kit, L-Lounge Cushions, Ultraleather, Oyster
703909R	Kit, L-Lounge Cushions, Ultraleather, Salsa

1. 703909x-08	Main bottom cushion
2. 703909x-02	Main back cushion
3. 703909x-03	Small back cushion
4. 703909x-09	Base side, Aft cushion
5. 703909x-10	Base side, Forward cushion
6. 703909x-06	Back side, Front cushion
7. 703909x-07	Wedge

*Substitute “BR”, “OY”, or “R” for “X” when ordering Ultraleather

2018 INTERNATIONAL
UPHOLSTERY, FOAM, ULTRALEATHER

Décor Boards, Signature

SEATING

Oyster Ultraleather

Espresso Ultraleather

Salsa Ultraleather

FLOORING

BEDSPREAD

AWNING

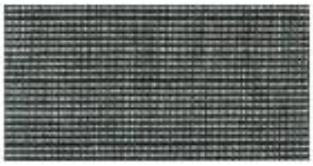

ACCENT FABRIC

CABINETRY

Ebony

COUNTERTOPS

Corrian® Ecru

2018 INTERNATIONAL
UPHOLSTERY, FOAM, ULTRALEATHER

Décor Boards, Serenity

SEATING

Oyster Ultraleather

Espresso Ultraleather

Salsa Ultraleather

FLOORING

BEDSPREAD

AWNING

ACCENT FABRIC

CABINETRY

Asian Sand

COUNTERTOPS

Corian® Sorrel

2018 INTERNATIONAL
VENTS AND FANS

Vent, Black Tank

690700-01	Vent pipe cover, White
382337	Gasket, Corlon, Vent Cap
380228	Wire hardware cloth

Vent, Bath

690266-02	Power ventilator w/garnish, White, CSA
690266-06	Power ventilator w/o garnish
690266-07	Trim ring, White
690266-08	Trim ring, Silver

Vent, Refrigerator

690394	Power ventilator
100341	Refrigerator roof vent collar, Large
101394	Cover, Refrigerator roof vent, Large
380228	Wire hardware cloth

Exhaust Fan

382240	Vent, Fantastic fan, Exhaust only
382467-01	Gasket, Exhaust fan

2018 INTERNATIONAL
SKYLIGHTS

Skylight, 23CB

381318-05	Skylight, 19.5 x 19.5
702804-03	Shade, Pleated, 19.25 x 20
203785	Trim ring, 19 x 19
114485	Mounting frame, 19 x 19

Skylight, 25’, 25FB, 27FB, 28’, 30’

381318-05	Skylight, 19.5” x 19.5”
704120-02	Shade, Skylight, 19.25 x 20, Grey
203785	Trim ring, 19” x 19”
115619	Mounting frame, 19 x 19

Skylight, 27FB, 28’, 30’

381318-06	Skylight, 14.5 x 22.5
704120-01	Shade, Skylight, 14.5 x 22.75, Grey
203786	Trim ring, 14 x 22, White
115620	Mounting frame, 14.5 x 22

2018 INTERNATIONAL
PANELING, EDGEBANDING, LAUAN

Paneling

801844	Panel, 12mm w/special grooves, Pearl Bisque
801355-01	Laminate, Vertical, Frosty White
801924-01	Laminate, Vertical, Ebony Woods
801832-01	Laminate, Vertical, Roman Gold
801809	Laminate, Vertical, White Liner
801833-01	Laminate, Vertical, Asian Sand
801743-01	Laminate, Vertical, Brushed Stainless Steel
802118	Laminate, Horizontal, Jeweled Ivory
801725	Pre-laminated panel, 3mm, Brushed Stainless Steel/Raw
801392	Pre-laminated panel, 12mm, White liner/White liner
801703	Pre-laminated panel, 12mm, Frosty White/White
801697	Pre-laminated panel, 12mm, Frosty White/Frosty White
801698	Pre-laminated panel, 12mm, White/Raw
801926	Pre-laminated panel, 12mm, Ebony Woods/White liner
801927	Pre-laminated panel, 12mm, Ebony Woods/Frosty White
801925	Pre-laminated panel, 12mm, Ebony/Ebony
801368	Pre-laminated panel, 18mm, White/White
801369	Pre-laminated panel, 18mm, Frosty White/White
801928	Pre-laminated panel, 18mm, Vertical, Ebony Woods/White
802119	Pre-laminated panel, 18mm, Jeweled Ivory/White liner
801929	Pre-laminated panel, 18mm, Ebony Woods/Frosty White
801931	Pre-laminated panel, 18mm, Ebony Woods/Ebony Woods

Edgebanding

365364-01	Edgebanding, .63”, Ebony Woods
365364-02	Edgebanding, .94”, Ebony Woods
365364-03	Edgebanding, 1.25”, Ebony Woods
365344-01	Edgebanding, .63”, Pearl Bisque
365344-02	Edgebanding, .94”, Pearl Bisque
365344-03	Edgebanding, 1.25”, Pearl Bisque
365400-02	Edgebanding, .94”, Jeweled Ivory

Lauan

800507-01	Lauan, 1/8 x 4’ x 8’
800507-02	Lauan, ¼” x 4’ x 8’, Raw/Raw
800507-03	Lauan, 3/8” x 4’ x 8’, Raw/Raw
800507-06	Lauan, .75" x 4' 8'
801438	Lauan, 2.7mm, Frost White Vinyl/Raw

Plywood

800506-04	Plywood, 1/2" x 4' x 8'
800506-05	Plywood, 5/8” x 4’ x 8’
800506-06	Plywood, 3/4" x 4' x 8'
800976-01	Plywood, tongue and groove, 19/32’ (floor)
801351	Lite Ply, 18mm (.75") 4' x 8'
801345	Radius plywood, .75" x 3" x 8'
801348	Radius plywood, .75" x 8" x 6'

2018 INTERNATIONAL
TRIMS

Trim

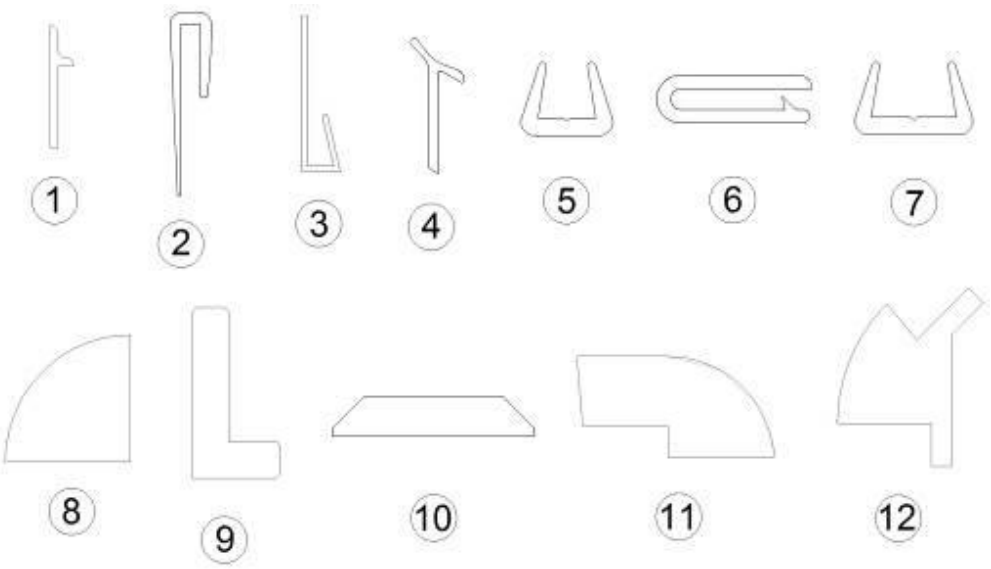

1.	115064	Trim, Aluminum counter top
2.	114070	J-molding, Mill finish
3.	201666-01	J-molding, 3/16”, Plastic, White
4.	201673	Reverse cove molding, White
	201673-02	Reverse cove molding, Black
5.	203138-01	Extrusion, Panel edging, White
	203138-03	Extrusion, Panel edging, Beige
	203138-05	Extrusion, Panel edging, Black
6.	203225-01	Trim lock, .75", Gray
7.	203464	Extrusion, Panel, .75”, Black
	203464-01	Extrusion, Panel, .75”, Oak
	203464-02	Extrusion, Panel, .75”, Biege
8.	800638-0118	Molding, ¼ round, .5", Asian Sand
	800638-0124	Molding, ¼ round, .5", Ebony Woods
9.	801665-0024	Molding, Door jamb, Ebony Woods
	801665-0018	Molding, Door jamb, Asian Sand
10.	801178-07	Flat molding, .81”, Frosty White
	801178-08	Flat molding, .81”, Cream
11.	801706-0024	Corner trim, 90°, 1" radius, Ebony Woods
	801706-0018	Corner trim, 90°, 1" radius, Asian Sand
	801706-0016	Corner trim, 90°, 1" radius, Wenge
12.	801394-0016	Corner trim, 45°, 2" radius, Wenge
	801394-0018	Corner trim, 45°, 2" radius, Asian Sand
	801394-0024	Corner trim, 45°, 2" radius, Ebony Woods
	801172-10	Molding, Corner, Butler White
	801956-03	Molding, Quarter round, .75”, Frosty White
	115565	Threshold extrusion, Main Door
	100097	Extrusion, Aluminum curtain track
	203445	T-molding, 9/16”, Black