adventure, inspired by

AIRSTREAM

2021 BASECAMP Parts Book

2021 BASECAMP
SECTION I

APPLIANCES

Air Conditioner I-1
Furnace and Water Heater I-1
Microwave I-2
Range and Cooktop I-2
Refrigerator I-2

EXTERIOR SHELL

Front End I-3
Aft End I-5
Wall, Roadside 16' I-8
Wall, Curbside 16' I-10
Wall, Roadside 20' I-12
Wall, Curbside 20' I-14
Roof I-16
Roof Trim I-18
Underbelly Wraps I-20
Body Protector I-21
Wrap Protectors and Holdbacks I-21

INTERIOR SHELL

Interior Skin I-23
Main Door Threshold I-23

2021 BASECAMP
SECTION II

CHASSIS

Axles II-1
Tires and Wheels II-1
Tires and Wheels, X-Package II-1
X-Package Lift Kit II-1
Spare Tire Carrier II-2
Step II-2
Hose Carrier II-2
Hitch Jack II-2
Stabilizing Jacks II-2
A-Frame II-3

DECALS, EXTERIOR TRIM

Decals, Logos, and Nameplates II-4
Keder Rail II-4
Reflectors II-4

DOORS, WINDOWS

Main Door II-5
Compartment Door II-7
Rear Door II-8
Rear Door Netting II-8
Windows 16’ II-9
Windows 20’ II-10
Window Stone Guards II-11

WINDOW SHADES

Window Shades II-12
Window Shades Hardware II-12

2021 BASECAMP
SECTION II

ELECTRICAL

110 Volt

Shore Line Cord II-13
Converter II-13
Breakers II-13
Junction Boxes II-13
Receptacles and USB Ports II-13

12 Volt

Battery and Battery Box II-14
7-Way Cable II-14
Switches II-14
Battery Disconnect II-14
Breakaway Switch II-14
Monitor System II-14
Breakers II-15
Fuses II-15
Solar Panel System II-15
Interior Lights II-15
Exterior Lights II-15
Tail Lights II-16

ENTERTAINMENT

Airstream Connected II-17

2021 BASECAMP
SECTION III

FLOOR COVERINGS

Floor Coverings III-1

FURNITURE

STORAGE

Overhead Storage Nets III-2
Overhead Bars III-2
Storage Bins III-2
Rear Storage Compartment, Floor III-3
Plumbing Storage III-3

LAVATORY

Bath Modules III-4
Bath Door III-8

GALLEY

Galley 16’ III-9
Galley 20’ III-15
Refrigerator Cabinet 20’ III-18
Storage Cabinet, 20’ III-22

LOUNGE

Dinette Seat, Roadside 16’ III-24
Dinette Seat, Curbside 16’ III-25
Rear Dinette Seat, Roadside 20’ III-27
Rear Dinette Seat, Curbside 20’ III-29
Front Dinette Seat, 20’ III-31
Dinette Tables 16’ III-33
Dinette Table Storage III-33
Dinette Tables 20’ III-34

2021 BASECAMP
SECTION III

HARDWARE

Main Door Latch with Deadbolt.....III-36
Rear Door Latch and Lock.....III-36
Interior Hinges.....III-36
Exterior Hinges III-36
Exterior Latches and Handles.....III-37
Interior Latches and Handles III-37
Head knocker.....III-38
Bathroom Accessories.....III-38
Shower Curtain III-38
Clothesline III-38
Rivets III-39
Screws.....III-39

SAFETY EQUIPMENT

Detectors and Fire Extinguishers III-40

LABELS AND TAGS

Labels and Tags III-41

2021 BASECAMP
SECTION IV

PLUMBING

LPG SYSTEM

LP Tank and Regulator IV-1
LP Tank Cover IV-1
LPG Systems IV-2
Propane Port, Exterior IV-4

FRESH WATER SYSTEM

Faucet, Galley IV-5
Faucet, Shower IV-5
City Water Hook-Up IV-5
Fresh Water Tank Fill IV-5
Water Pump IV-5
Fresh Water Tank IV-5
Fresh Water Fittings IV-6
Fresh Water Lines IV-7
Winterization Kit IV-9

DRAIN SYSTEM

Sink and Shower IV-10
Black and Grey Tank IV-10
Drain Systems IV-11
Toilet IV-13
Dump Valves IV-14

HEATING SYSTEM

Heat Systems IV-16

SEALERS, GASKETS

Sealers IV-18
Gaskets IV-18

2021 BASECAMP
SECTION IV

UPHOLSTERY

Dinette Seat Cushions IV-19
Décor Boards IV-21

VENTS, FANS

Vent, Battery IV-24
Vent, Black Tank IV-24
Vent, Refrigerator IV-24
Vent, Roof IV-24
Exhaust Fan IV-24

PANELING, EDGEBANDING, LAUAN

Paneling IV-25
Edgebanding IV-25
Lauan IV-25
Plywood IV-26
Fill Sticks IV-26

TRIMS

Trim IV-27

2021 BASECAMP
APPLIANCES

Air Conditioner

690708-01	Air conditioner, Mach 8, 9.2 Polar Cub
690708-02	Heat strip
690708-04	Deluxe cool/heat ready, White
690708-06	Drain kit
690708-100	Filter
601240-01	Black drain tubing, .5”

Furnace and Water Heater, 16’

690705	Forced air furnace & water heater, Truma Combi Eco Plus
690705-0500	CP Plus Control Panel
690705-09	Accessory kit
690705-01	Drain valve
690705-02	Adapter
690705-03	Cold water connection
690705-04	Hot water connection w/vent
690705-06	Room temperature sensor
690705-07	Interface cable
690705-100	Non-return valve, .5”
690705-101	Fuse, 10 amp slo-blow
690704-26	Cowl-Wall Inner
690704-27	Cowl-Wall Outer Part Blk
690704-09	End outlet nut
690704-10	End outlet, Black
690704-18	Lamella insert, Black
690704-2400	Cover, CP Plus
513028	Tank heater switch, Black

2021 BASECAMP
APPLIANCES

Furnace, 20’

690616	Furnace-Duct 16OOO BTU Suburban
690616-01	Intake Tube 5"
690616-02	Thermostat For Furnace 690616
690616-100	Exhaust Extension For Furnace 690616
690616-101	Limit Switch For Furnace
600247	Hose - 4" Heat Duct Round Flex
600193	2"Duct Thermaflex Flexible Air
340084-28	Clamp, Hose - Size 2-1/4IN
340084-06	Clamp, Hose SAE #6
600184	Fitting- 2" Heat Duct
600526	Flange, 4 In (Suburban)
601338	Tee, Heat Duct, 4 X 4 X 4
601348	Tee, Heat Duct, 4 X 4 X 2
602394-03	Register-Black 4" #HV4BK

Water Heater, 20’

690711-01	Heater-Water IW60 #5186A
690711-02	Vent-IW60 Water Heater #260595
690711-03	Control-Digital IW60 #161291
690711-04	Vent Cap - Water Heater 15-1/2

Microwave

690648-02	Microwave, Stainless Steel, Contoure
382454	Foam-Microwave Stabilizer BC

Range and Cooktop

690576	Cooktop, 2 Burner, SMEV

Refrigerators

690599-01	Refrigerator – Nova Kool - 3.1
386206	Louvered Vent
115166-08	Insert Refrigerator Panel 16.56 X 28
345580-01	Screw-#6-5/8" Oval Black
690736-01	Refrigerator 4.3CF RH #4500 ACDC, 20’
112946-1	Refer Insert Pnl 28 X 19.625

2021 BASECAMP
EXTERIOR SHELL

Front End, 16’

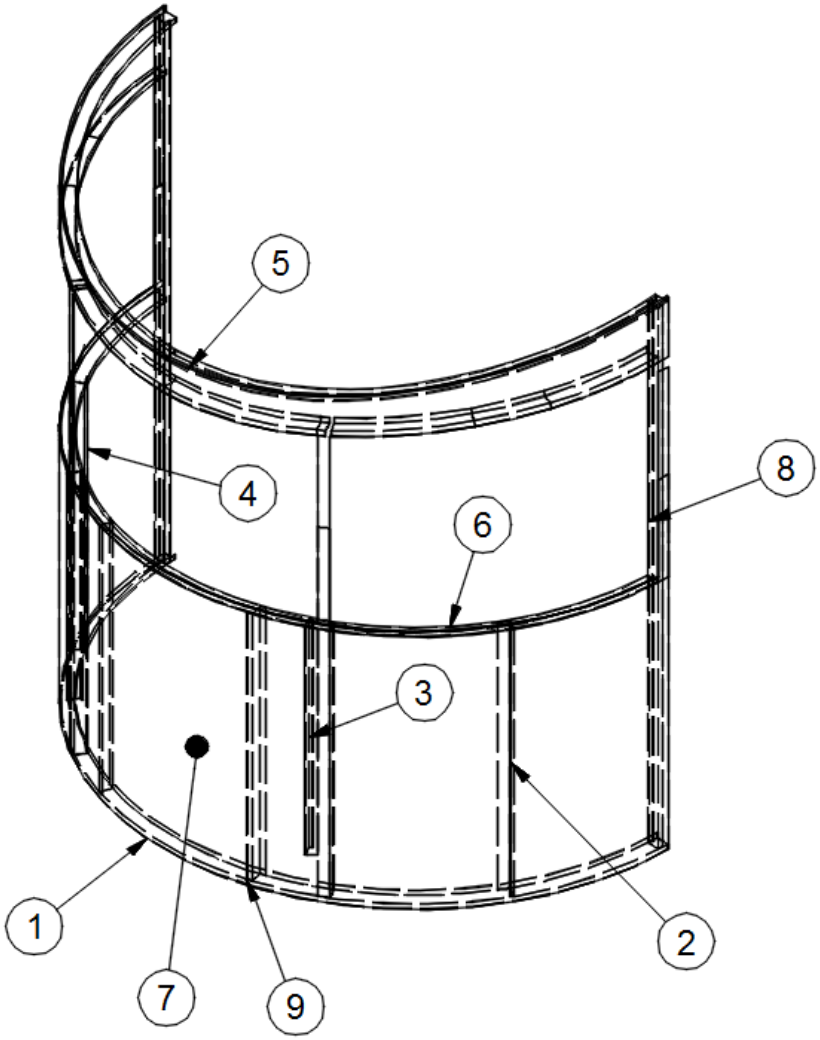

	923286	End Shell, Front
1.	115725	Z extrusion, Front floor
2.	115661-02	Lower vertical supports
3.	115661-03	Window Vertical supports, RS
4.	115661-04	Window, Vertical supports, CS
5.	115717	Roof halo, Z front
6.	115726	Window bow, Lower
7.	114880-262	Aluminum sheet, .04 x 51” x 262”
8.	115730-01	C-extrusion, Interlocking
9.	104408	Z extrusion
	371453	Window assembly, Front center
	372275	Window, Front center, Glass only
	365001	Seam tape
	365222-01	Tape, Double coated
	365300	Sika 95, .09” x .5”

2021 BASECAMP
EXTERIOR SHELL

Front End, 20’

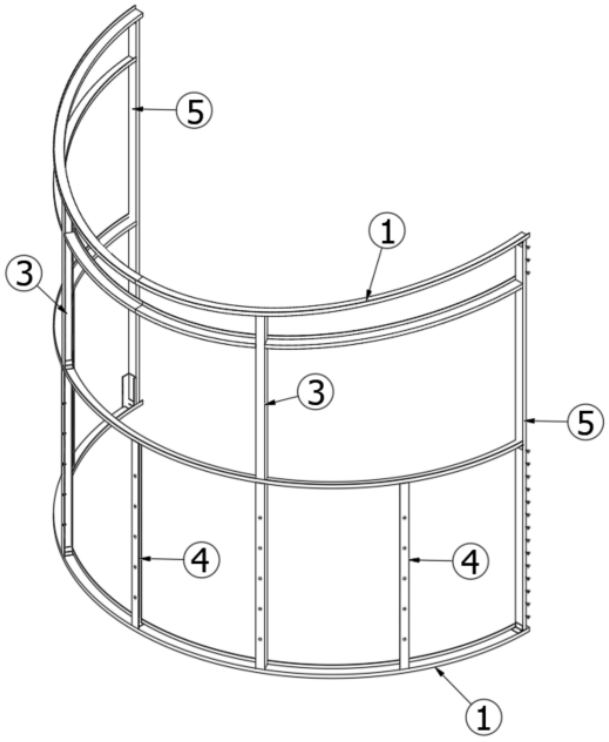

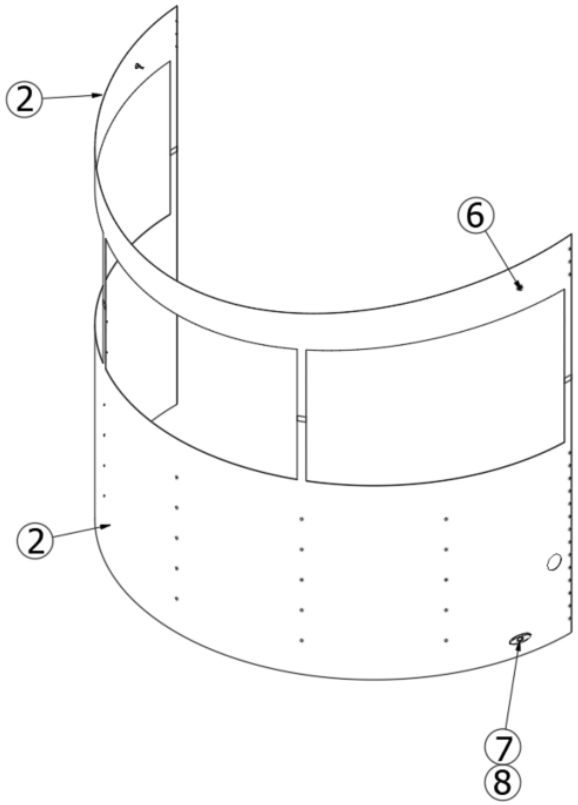

923494 End Shell Assy - Front BC 20

1.	104408	Extr., Z Rib - Die No. 240572 (Sold In A 19.16 Ft. Piece)
2.	114879-06	Alum. Sheet .40x 33 X 152.5" (Sold In A 35 Sf Sheet)
3.	115661	Extrusion-Vertical Supports BC
4.	115661-02	Support-Lower Vertical BC
5.	115730	C Extrusion-Interlocking Shell
6.	513025	Marker/Clearance Lt Yellow
7.	512967	Reflector-Yellow Oval #A11AXB
8.	512964	Light-Yellow Marker/Clearance
	114414	Angle, Formed, 1 X 1 X 1.5

2021 BASECAMP
EXTERIOR SHELL

Aft End, 16’

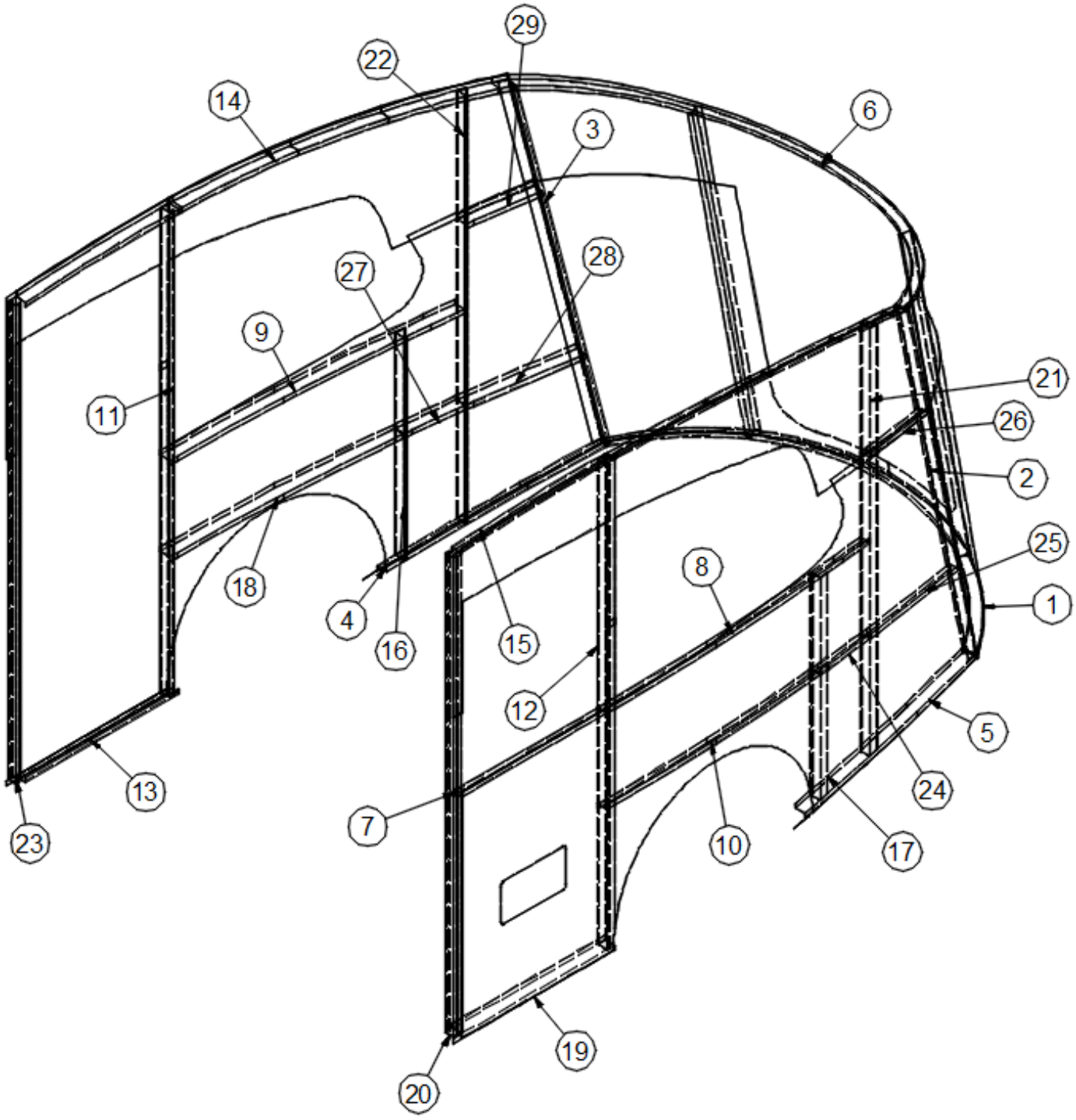

Parts Listed on Next Page

2021 BASECAMP
EXTERIOR SHELL

Aft End, 16’

	923287	End Shell, Rear
1.	115731	Z-extrusion, Rear floor
2.	115661-06	U-channel, Rear RS
3.	115661-05	U-channel, Rear CS
4.	115733	Z-extrusion, Rear floor CS
5.	115732	Z-extrusion, Rear floor RS
6.	115743	Rear roof halo
7.	115742	Horizontal lavy brace, RS
8.	115741	Horizontal window brace, RS
9.	115740	Horizontal window brace, CS
10.	115739	Horizontal wheel well brace, RS
11.	115661-09	Rear door, CS
12.	115661-10	Rear door, RS
13.	115735	Z-extrusion, Rear CS straight
14.	115744	Roof halo, CS
15.	115745	Roof halo, RS
16.	115661-07	U-channel, Aft wheel, CS
17.	115661-08	U-channel, Aft wheel, RS
18.	115738	Horizontal wheel well brace, CS
19.	115736	Z-extrusion, Rear RS straight
20.	365300	Sika 95, .09” x .5”
21.	115661-11	End shell support, RS
22.	115661-12	End shell support, CS
23.	115734-01	U-extrusion, Interlocking
24.	115795	RS horizontal wheel well brace, Mid
25.	115796	RS horizontal wheel well brace, Rear
26.	115804	Z-extrusion, RS upper seam
27.	115797	CS horizontal wheel well brace, Mid
28.	115798	CS horizontal wheel well brace, Rear
29.	115805	Z-extrusion, CS upper seam
	968465	Rear cargo door
	372280	Window, Rear cargo door
	114880-201	Aluminum sheet, .04 x 51” x 201”

2021 BASECAMP
EXTERIOR SHELL

Aft End, 20’

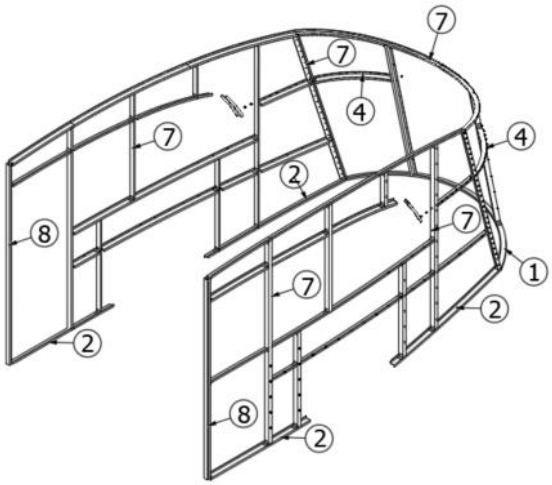

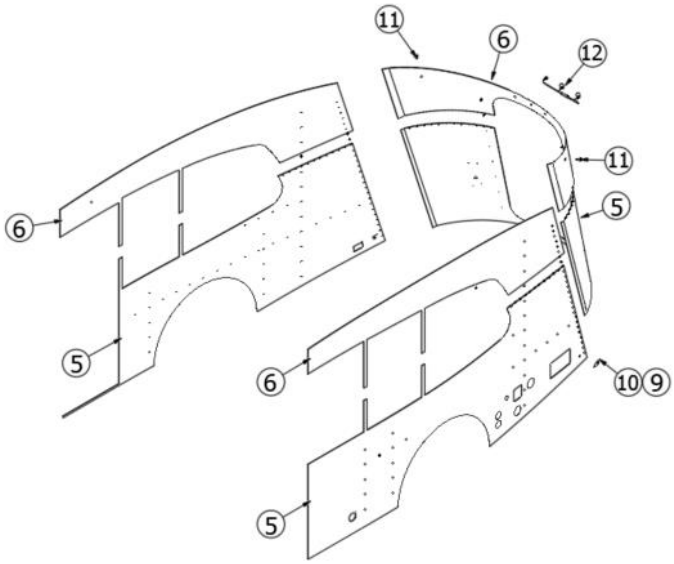

1.	115725	Z Extrusion-Floor Frt BC
2.	104408	Extr., Z Rib - Die No. 240572 (Sold In A 19.16 Ft. Piece)
3.	115743	Halo - Rear Roof BC
4.	115725	Z Extrusion-Floor Frt BC
5.	114880-06	Alum. Sheet .040 X 51 X 152.5" (Sold In A 54 Sf Sheet)
6.	114879-06	Alum. Sheet .40x 33 X 152.5" (Sold In A 35 Sf Sheet)
7.	115661	Extrusion-Vertical Supports BC
8.	115734	U Extrusion Interlocking
9.	512965	Light-Red Marker/Clearance
10.	512968	Reflector-Red Oval #A11RXB
11.	513026	Marker/Clearance Lt Red
12.	512971	Kit-Red Light ID #MCL12RK3 BC
	114414	Angle, Formed, 1 X 1 X 1.5

2021 BASECAMP
EXTERIOR SHELL

Wall, Roadside 16’

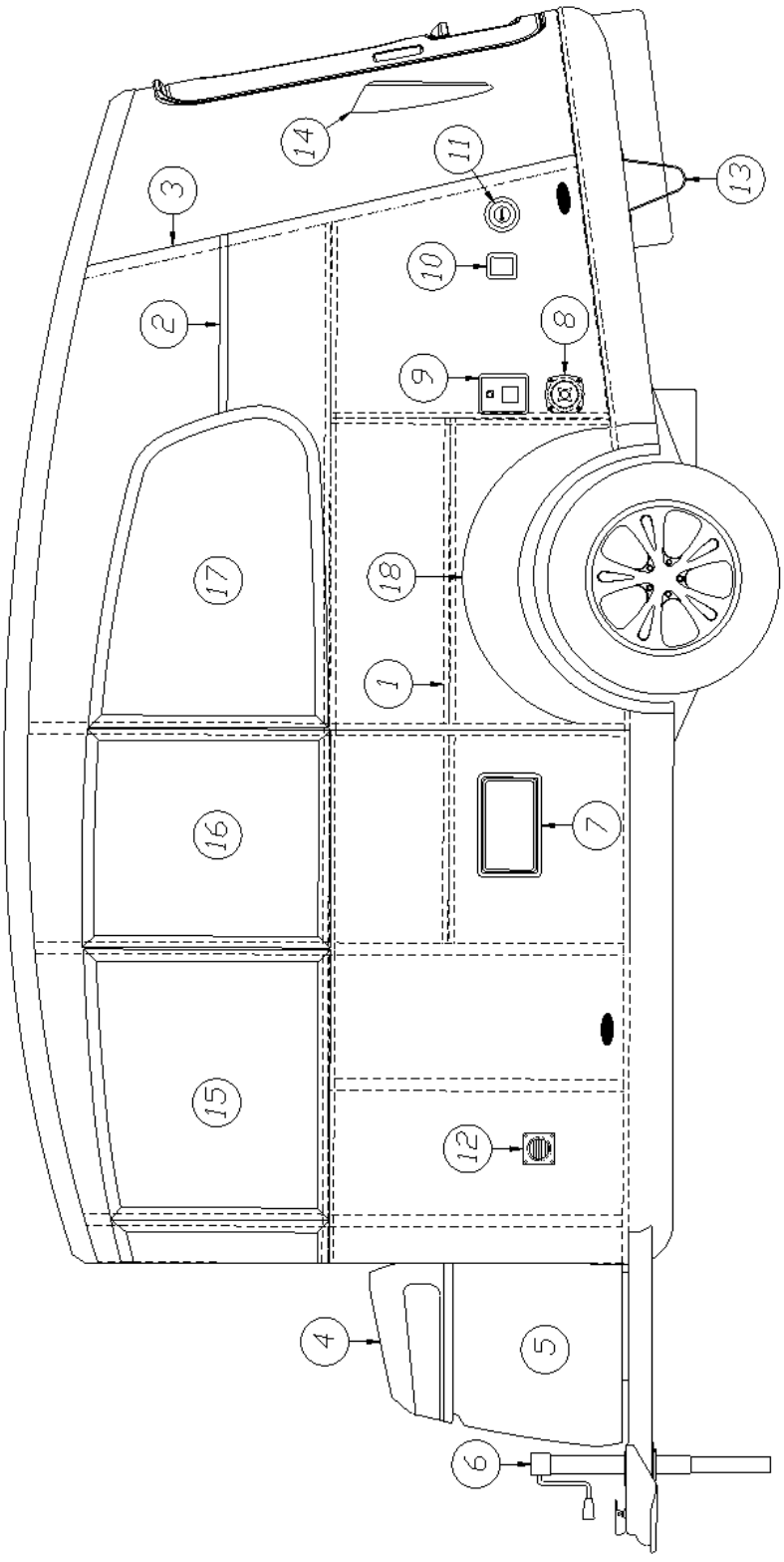

Parts Listed on Next Page

2021 BASECAMP
EXTERIOR SHELL

Wall, Roadside 16’

1.	115739	Horizontal wheel well brace, RS
2.	115804	Z-extrusion, RS upper seam
3.	115661-06	U-channel, Rear RS
4.	203860	LP lid
5.	203856	LP shroud body
6.	410945	Hitch jack
7.	381766	Access hatch, Exterior shower
8.	601392-06	City water fill, 50 PSI
9.	601194	Water fill, Fresh
10.	513645	Power inlet, 30A, 125V, Male
11.	690704-26	Cowl-Wall Inner
	690704-27	Cowl-Wall Outer Part Blk
12.	203638-02	Grille, Battery vent
13.	400914-03	Stabilizer jack
14.	115670-01	Taillight casting, RS
15.	371452	Window assembly, RS front
16.	371451	Window assembly, RS flat
17.	371459	Window assembly, RS rear
18.	203992	Exterior wheel well arch, RS
	203990	Inner wheel well, RS
	372274	Window, RS front, Glass only
	372281	Window, RS flat, Glass only
	372277	Window, RS rear, Glass only

2021 BASECAMP
EXTERIOR SHELL

Wall, Curbside 16’

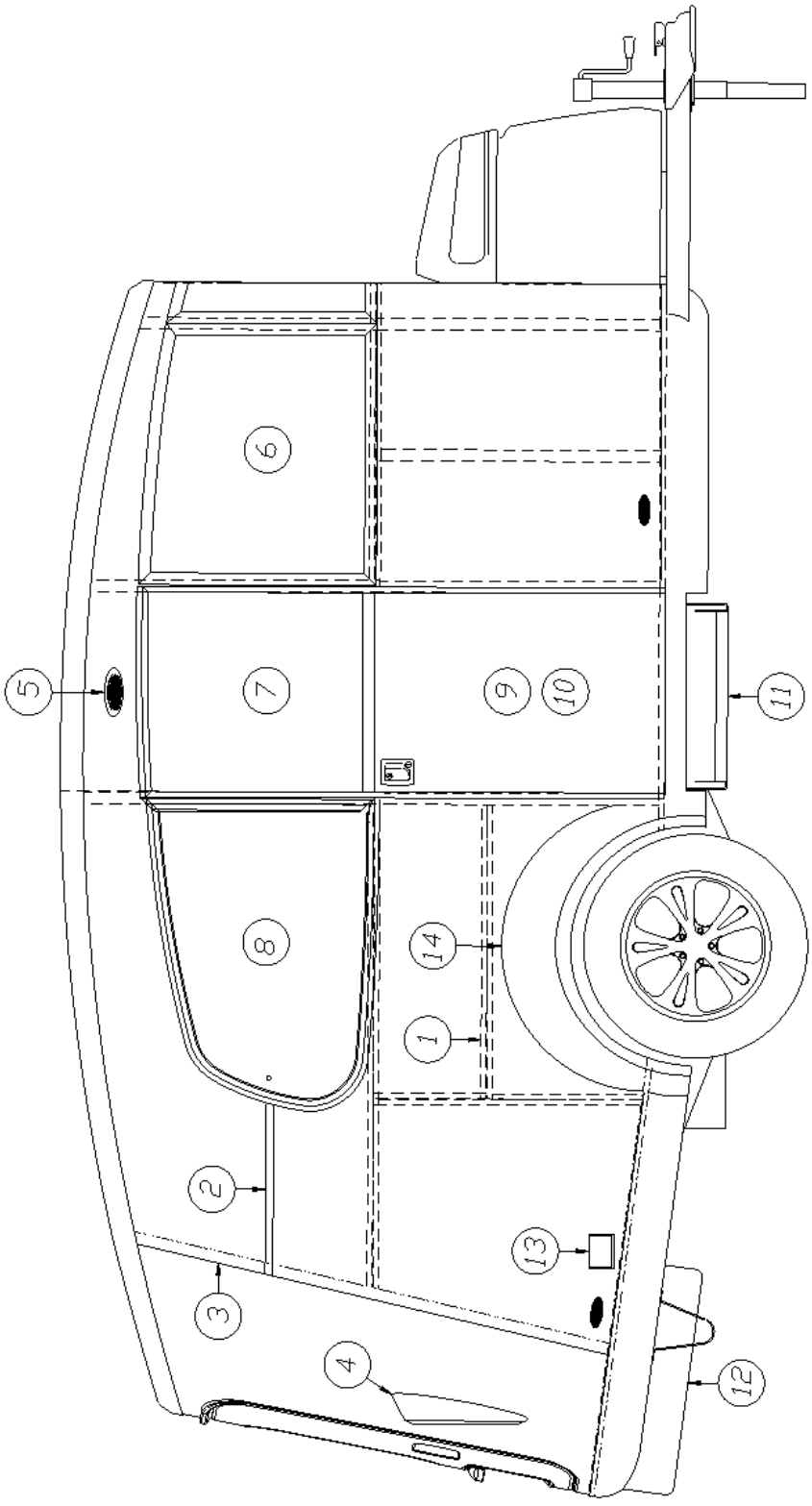

Parts Listed on Next Page

2021 BASECAMP
EXTERIOR SHELL

Wall, Curbside 16’

1.	115738	Horizontal wheel well brace, CS
2.	115805	Z-extrusion, CS upper seam
3.	115661-05	U-channel, Rear CS
4.	115670-02	Taillight casting, CS
5.	512793	LED porch light, Chrome
6.	371454	Window assembly, CS front
7.	372282	Window, CS door
8.	371458	Window assembly, CS rear
9.	968440	Door, CS flat
10.	382351	Screen door, Retractable
11.	400962	Step, Main door, Steel
12.	455172	Winch, Spare tire
13.	512741	Water proof cover w/gasket, Gray
14.	203993	Exterior wheel well arch, CS
	203991	Inner wheel well, CS
	372273	Window, CS front, Glass only
	372276	Window, CS rear, Glass only

2021 BASECAMP
EXTERIOR SHELL

Wall, Roadside 20’

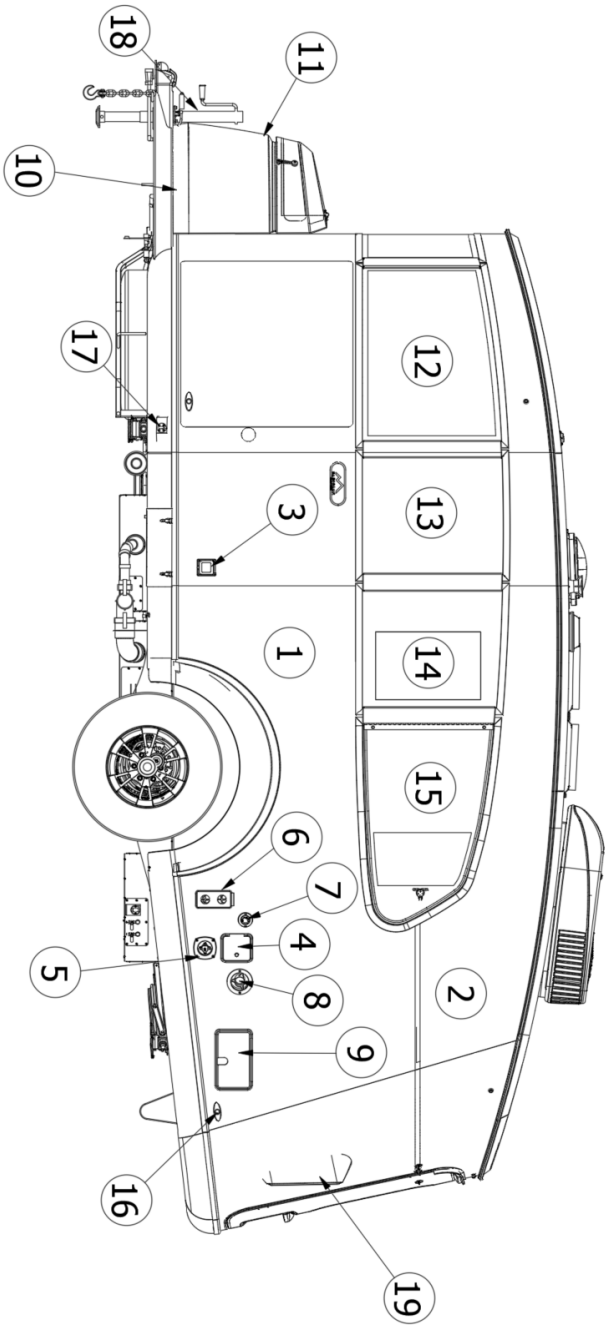

Parts Listed on Next Page

2021 BASECAMP
EXTERIOR SHELL

Wall, Roadside 20’

1.	114880-06	Alum. Sheet .040 X 51 X 152.5" (Sold In A 54 Sf Sheet)
2.	114879-06	Alum. Sheet .40x 33 X 152.5" (Sold In A 35 Sf Sheet)
3.	513797	Inlet-30A Smartplug-Grey
4.	601194	Water Fill W/Lock Gray
5.	601392-06	Water Fill-City W/REG. CSA Chrome
6.	690616	Furnace-Duct16ooo BTU Suburban
7.	601441-02	Black tank flush
8.	690711-02	Vent-IW60 Water Heater #260595
9.	602326	Shower-Exterior
10.	203861	Tray- LP Black BC
11.	203856	Shroud- LP Body BC
12.	371475	Window Assy Front RX BC20
13.	371478	Window Assy - RS FLAT
14.	371479	Window ASSY - RS Curved BC 20
15.	371459-01	Window Assy - RS Rear BC 20
16.	512965	Light-Red Marker/Clearance
	512968	Reflector-Red Oval #A11RXB
17.	513033	Bracket, Portable solar panel port
18.	410945	Manual jack, Eclipse
19.	115670-02	Casting, RS taillight
	512961	Light, Stop/turn/tail, Red

2021 BASECAMP
EXTERIOR SHELL

Wall, Curbside 20’

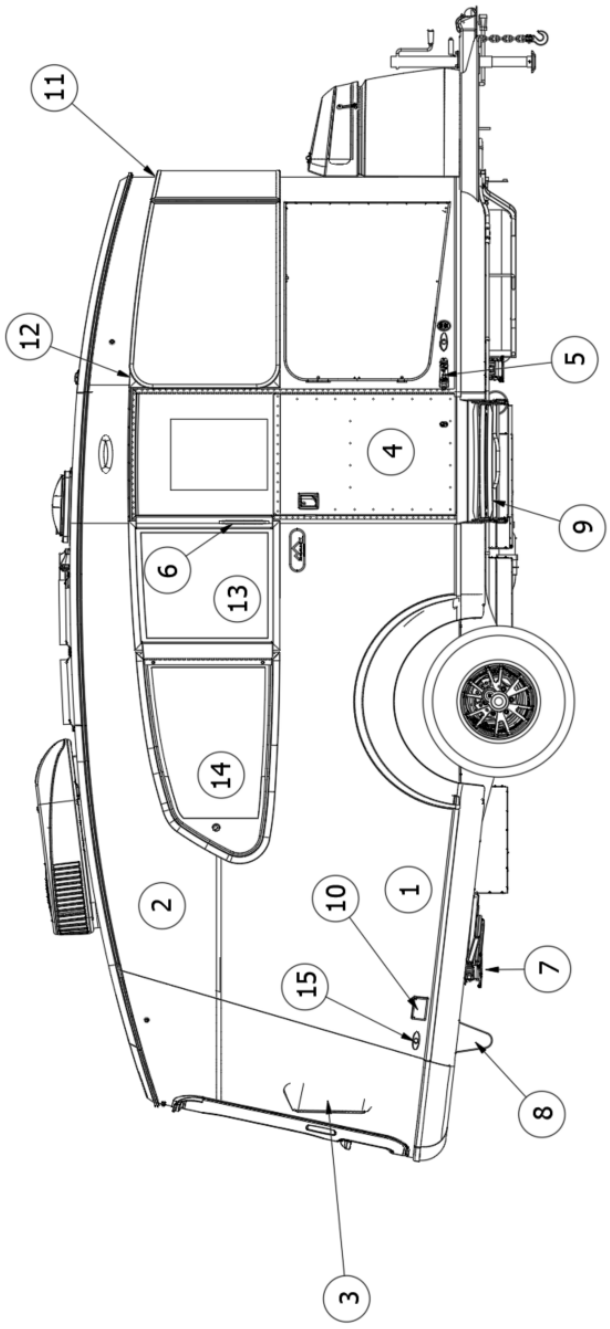

Parts Listed on Next Page

2021 BASECAMP
EXTERIOR SHELL

Wall, Curbside 20’

1.	114880-06	Alum. Sheet .040 X 51 X 152.5" (Sold In A 54 Sf Sheet)
2.	114879-06	Alum. Sheet .40x 33 X 152.5" (Sold In A 35 Sf Sheet)
3.	115678-01	Bracket, CS taillight
	512961	Light, Stop/turn/tail, Red
4.	968440	Main Door
5.	386314	Main door stay
	116003-01	Door Latch Bracket
	382624	Rubber Bumper
6.	101171-01	Grab handle, Main door, Black
7.	401102	Assy, Stabilizer Jack, 28"
8.	411034	Skid Plate
9.	400962	Step-Main Dr Steel 24"
10.	500563-03	Recept-White 15 A#WRDU15-WT
11.	371477	Window Assy - Front Center
12.	371476	Window Assy - Front CS BC 20
13.	371480	Window Assy - CS Curved BC 20
14.	371458	Window Assy-CS Rear BC
15.	512965	Light-Red Marker/Clearance
	512968	Reflector-Red Oval #A11RXB

2021 BASECAMP
EXTERIOR SHELL

Roof 16’

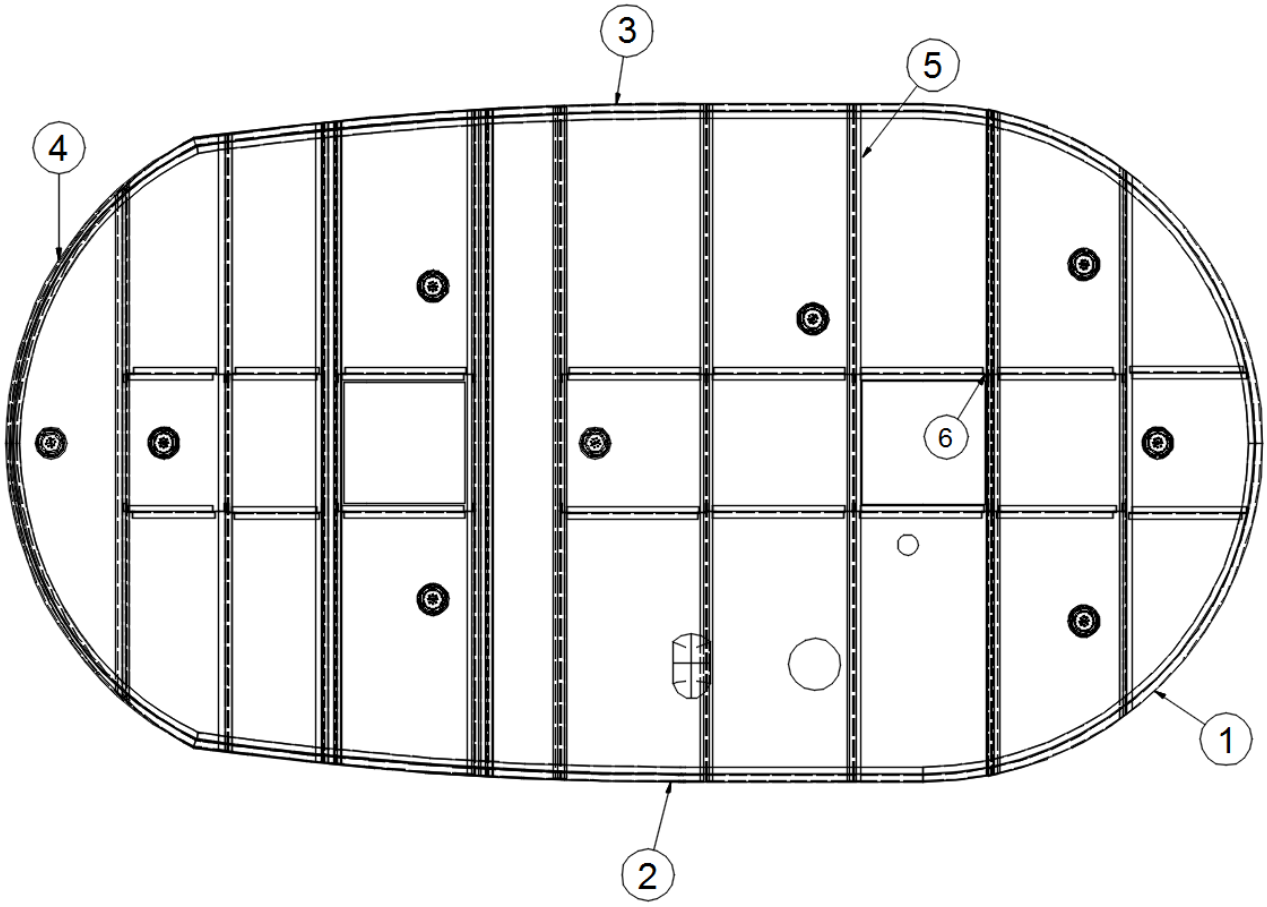

	923280	Roof Assembly
1.	115714	U-halo, Front
2.	115715-01	U-halo, CS
3.	115715-02	U-halo, RS
4.	115716	U-halo, Rear
5.	104707-06	Extrusion, I section
6.	114414	Angle, Formed
	325004-01	Rivet, 1/8” x .5”, Clear Anodized
	365334	Tape, Sealfoam w/PSA one side
	365001	Tape, Double coated foam
	114880-262	Aluminum, 51” x .04”
	104408	Z-bar, .075 x 1.75 x .75
	685510	Seam tape, Black rubber

2021 BASECAMP
EXTERIOR SHELL

Roof 20’

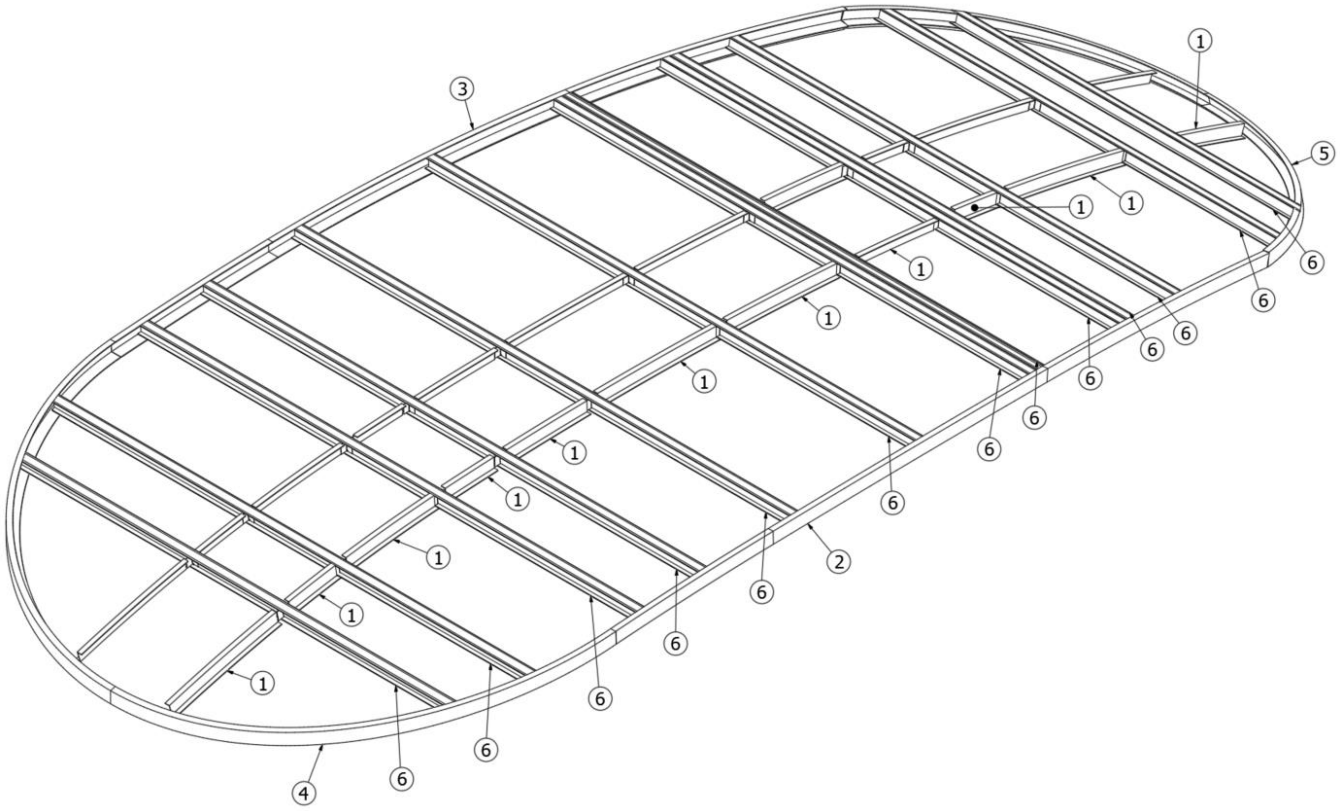

923502 Roof Assy BC 20

1.	104408	Extr., Z Rib - Die No. 240572 (Sold In A 19.16 Ft. Piece)
2.	923502-17	Halo-RS Roof-Stretch Bent BC20
3.	923502-18	CS Roof "U" Halo Stretch Bent
4.	923502-19	Front Roof U Halo Stretch Bent
5.	115716	U Halo - Rear BC
6.	104707-06	Extrusion ""I"" 258.00"" 6063-T4 (Sold Ina 21.5 Ft Piece)
	114414	Angle Formed 1 X 1 X 1.5
	114880-06	Alum. Sheet .040 X 51 X 152.5" (Sold In A 54 Sf Sheet)

2021 BASECAMP
EXTERIOR SHELL

Roof Trim 16’

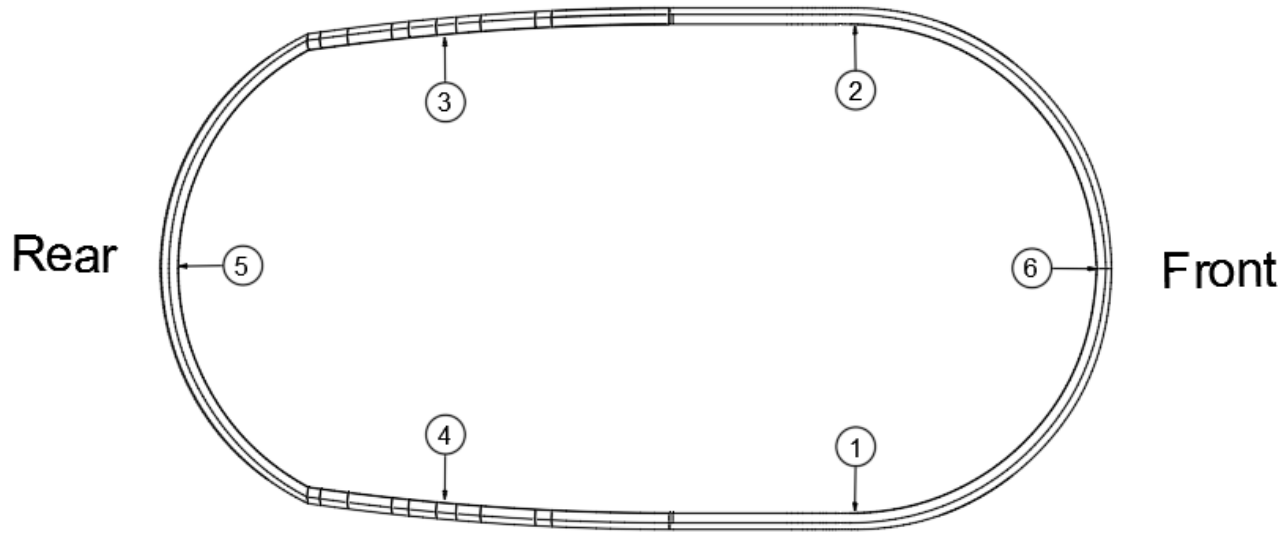

1.	203867-01	Roof trim, CS
2.	203867-02	Roof trim, RS
3.	203867-03	Roof trim, RS rear
4.	203867-04	Roof trim, CS rear
5.	203867-06	Roof trim, Front center
6.	203867-05	Roof trim, Rear center
	115717	Halo, Z front
	115743	Halo, Rear roof
	115744	Halo, CS roof
	115745	Halo, RS roof

2021 BASECAMP
EXTERIOR SHELL

Roof Trim 20’

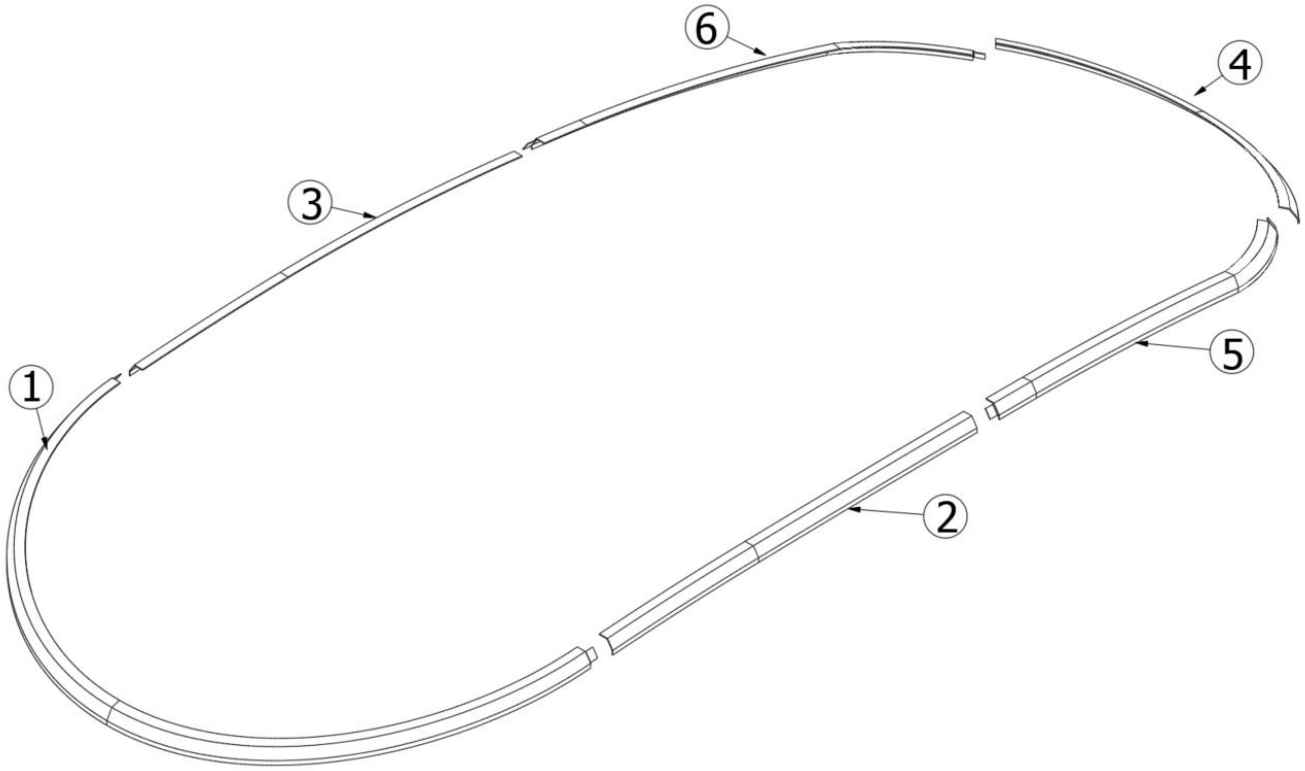

1.	204175-1	Roof Trim BC 20
2.	204175-2	Roof Trim RS Front BC 20
3.	204175-3	Roof Trim S Frt BC 20 Mirrored
4.	204175-4	Roof Trim BC 20
5.	204175-5	Roof Trim RS Rear BC 20
6.	204175-6	Roof Trim - CS Rear BC 20

2021 BASECAMP
EXTERIOR SHELL

Underbelly Wraps, 16’

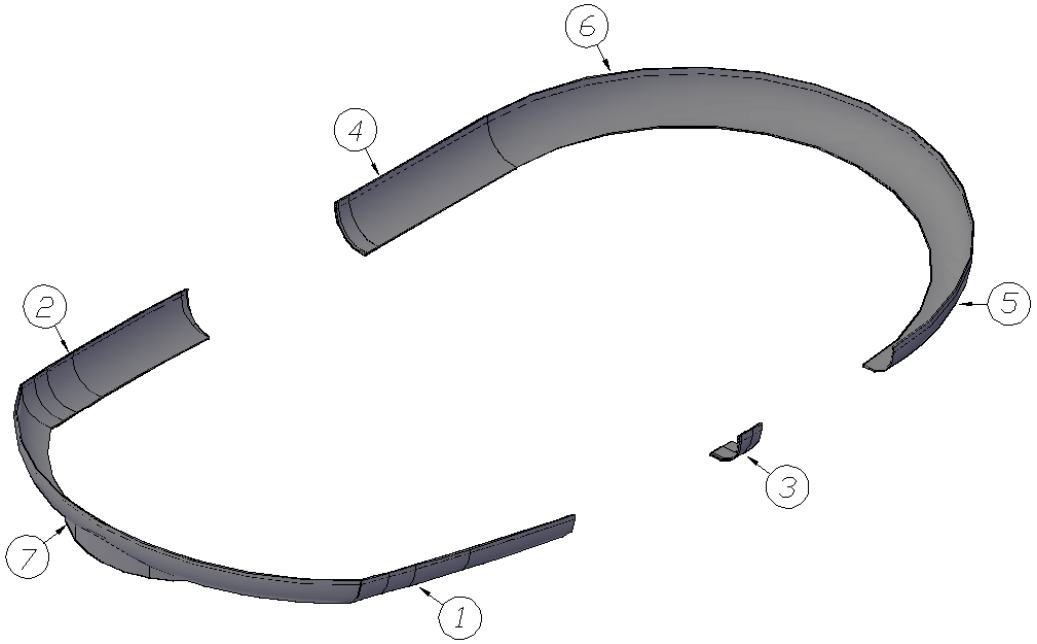

1.	203850-01	Rear CS skirting
2.	203850-02	Rear RS skirting
3.	203850-03	Step CS skirting
4.	203850-04	Straight RS skirting
5.	203850-05	Front CS skirting
6.	203850-06	Front RS skirting
7.	203850-07	Rear center underbelly

2021 BASECAMP
EXTERIOR SHELL

Underbelly Wraps, 20’

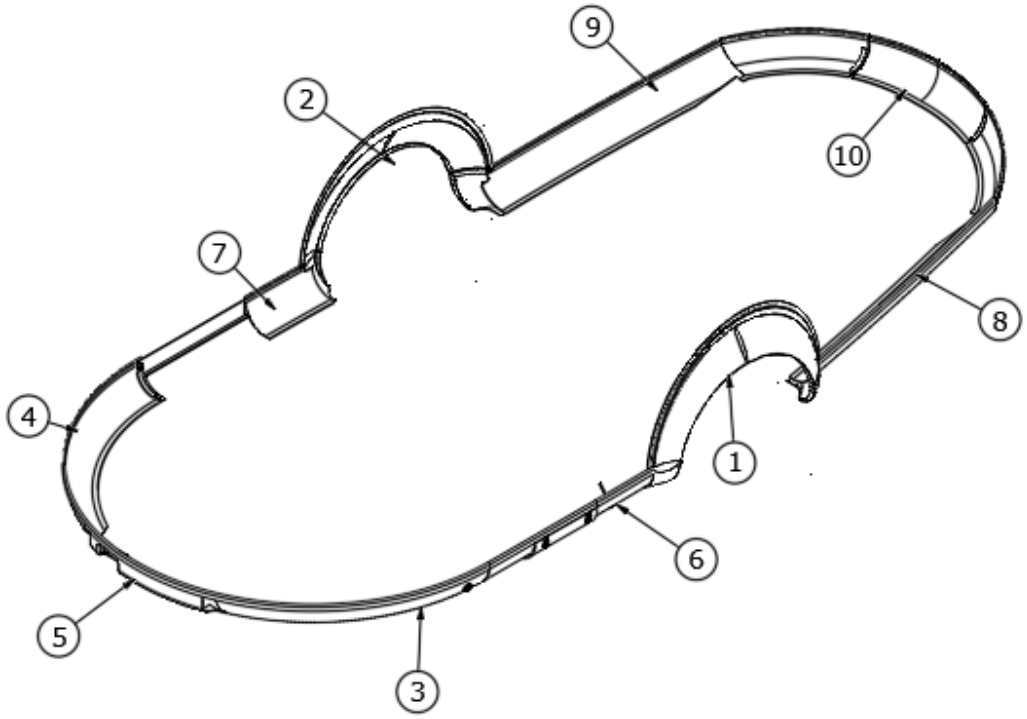

1.	204165-01	Wheel Arch Ext Curbside BC 20
2.	204165-02	Wheel Arch Ext RS BC 20
3.	204168-01	Banana Wrap RS FR Corner BC 20
4.	204168-02	Banana Wrap CS FR Corner BC 20
5.	204168-03	Banana Wrap - Frt Center BC 20
6.	204169-01	Banana Wrap RS FR BC 20
7.	204169-02	Banana Wrap CS Front BC 20
8.	204170-01	Banana Wrap RS Rear Corner BC 20
9.	204170-02	Banana Wrap CS Rear Corner BC 20
10.	204173	Banana Wrap Rear BC 20
	203837	Trim-PVC Lower Black BC (Sold In a 100 Ft Roll)

Body Protector

203881	3M film body protector

Wrap Protectors and Holdbacks, 16’ X Package

968857	RS Stone Guard Assembly
968858	CS Stone Guard Assembly
381605-03	Piano Hinge
114819-03	Wrap Protector Holdback Assembly
114819-02	Wrap Protector Holdback Assembly

2021 BASECAMP

Wrap Protectors and Holdbacks, 20’ X Package

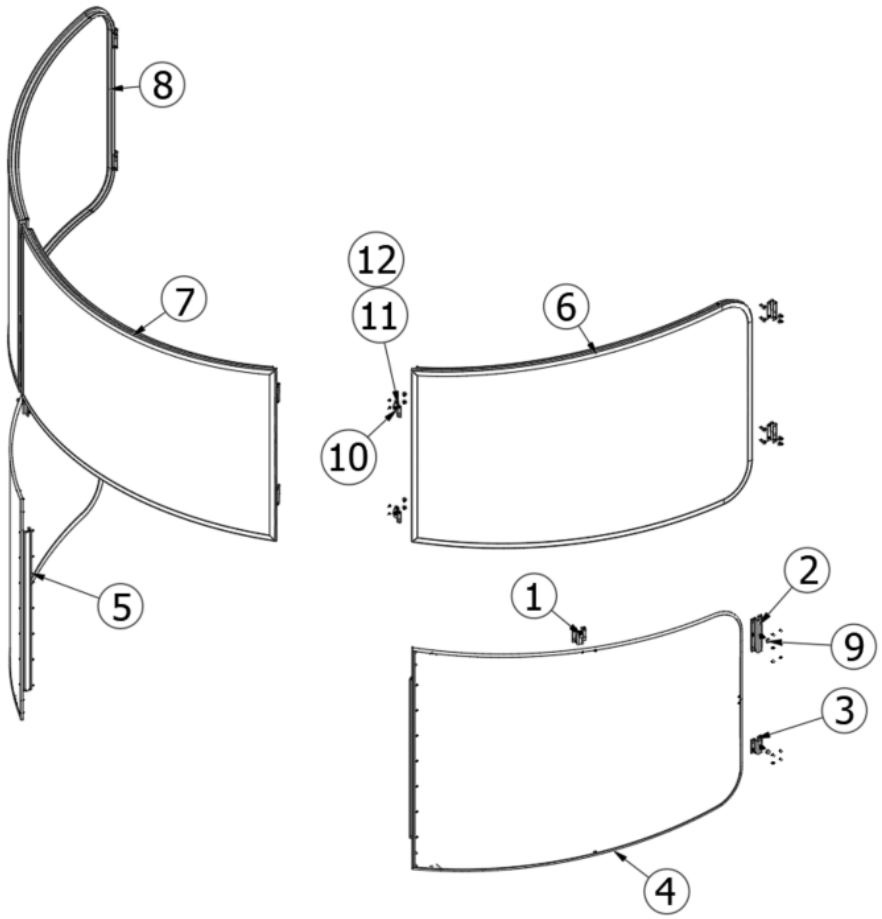

1.	114819-02	Assembly Wrap Protector Hold Back
2.	114819-03	Assembly Wrap Protector Hold Back
3.	114819-04	Assembly Wrap Protector Hold Back
4.	923524	Assembly Stone Guard RS
5.	923525	Assembly Stone Guard CS
6.	923526	Assembly Solar Guard RS
7.	923527	Assembly Solar Guard Center
8.	923528	Assembly Solar Guard CS
9.	345417	Nut Acorn – Hex Locking SS
10.	685358	Quarter Turn Fastener, Stone Guards
11.	685359	Rubber Receptacle
12.	685362	Retainer, Split Ring, Stone Guard
	204205	Plexiglass RS/CS
	204206	Plexiglass Center
	203881-01	Body Film Protector 10" X 15.0
	365334	Tape-Sealfoam 7#W/Psa One Side (Sold In A 100 Ft Roll)
	101401	Extrustion, Door Latch Housing/Stoneguard
	360417	Seal-Gasket W/Adhesive Back

2021 BASECAMP
INTERIOR SHELL

Interior Skin

114879-02	Alum. Sheet .040 X 33 X 284.5" (Sold In A 65 Sf Sheet)
114880-05	Alum. Sheet .040 X 51 X 173.50" (Sold In A 62 Sf Sheet)
114880-06	Alum. Sheet .040 X 51 X 152.5" (Sold In A 54 Sf Sheet)
203740	Insulation-Fiber 2.25x48" X60' (Sold In A 240 Sf Roll)

Main Door Threshold

115565	Extrusion, Main door threshold
382290-01	End cap, Threshold
382290-02	End cap, Threshold

2021 BASECAMP
CHASSIS

Axles, 16’

410980-28	Axle 3150# Nev-R Adjust
410980-102	12" LH Nev-R Adjust Brake Assembly
410980-103	12" RH Nev-R Adjust Brake Assembly

Axles, 20’

410980-27	Axle 4300 Dexter
410980-102	12" LH Nev-R Adjust Brake Assembly
410980-103	12" RH Nev-R Adjust Brake Assembly

Tires and Wheels, 16’

411159	Tire/Wheel Assy BC 15" BC 16
411159-01	Tire only
411067	Lug nut, ¾”
455635	Lug Nut Wrench - Kt #35636 Stow And Go 4 Way

Tires and Wheels, X-Package, 16’

411160	Tire/Wheel Assy BC 16 X
411160-01	Tire only 235/75R15
411067	Lug nut, ¾” Chrome
400985	Center Cap, Stainless Steel
455635	Lug Nut Wrench - Kt #35636 Stow And Go 4 Way

Tires and Wheels, 20’

411150	Tire/Wheel Assy 6 X 5.5"
400844-01	Cap-Center Stainless Steel
400923	Lug Nut-1/2 X 20 Chrome, 13/16 HEX McGard
455635	Lug Nut Wrench - Kt #35636 Stow And Go 4 Way

Tires and Wheels, X-Package, 20’

411151	Tire/Wheel Assy 6 X 5.5" BC20 X
400844-01	Cap-Center Stainless Steel
400923	Lug Nut-1/2 X 20 Chrome, 13/16 HEX McGard
455635	Lug Nut Wrench - Kt #35636 Stow And Go 4 Way

X-Package Lift Kit

455487	Lift Kit Spacer, 16’
455782	Frame Spacer Kit, 20’

2021 BASECAMP
CHASSIS

Spare Tire Carrier, 16’

410843-02	Tire/Wheel Assembly Spare
455172	Spare tire winch
455383	Lug wrench, Telescoping
115821	Bracket, Spare tire
455635	Lug Nut Wrench - Kt #35636 Stow And Go 4 Way

Spare Tire Carrier, 20’

411152	Spare Tire/Wheel Assy 6X5.5, 20’ Standard
411153	Spare Tire/Wheel Assy 6X5.5, X Package
455764	Spare Tire Carrier – 20
455635	Lug Nut Wrench - Kt #35636 Stow And Go 4 Way

Step

400962	Step, Main door, Steel, 24"
401074	Step-Steel Dbl 26" Wide BC20 X Option

Hose Carrier

602619-02	E-Z hose carrier, 64”, Black
104704-01	Shim, 3 x 3
115721	Spacer, Hose bracket

Hitch Jack

410945	Manual jack, Eclipse
401022	Hitch jack foot pad
401022-01	Extension, Foot pad Silver, X-Package

Stabilizing Jacks, 16’

401042-01	Stabilizer jack, 22”
401027-0300	Hardware Kit (Includes 2 Foots Pads & Hardware)
401027-03	Foot Pad
401027-02	Crank-Stabilizer C-Jack
382412	Spacer, Stabilizer jack

Stabilizing Jacks, 20’

401102	Assy, Stabilizer Jack, 28"
401102-01	Stabilizer Jack, 28"

2021 BASECAMP
CHASSIS

A-Frame

410612	Safety chain w/hook
451677	Plate, Jack
455653	Demco 2 5/16 12.5 K Coupler
455653-100	Demco EZ-Latch 2 5/16 Coupler Repair Kit For 455653
455654	Adjustable Coupler Lock

2021 BASECAMP
DECALS, EXTERIOR TRIM

Decals, Logos, and Nameplates

386294	Nameplate, “BASECAMP”, Orange/Ivory
386356	Nameplate, “Basecamp X”
386255-01	Curved badge, “AIRSTREAM”, Black Chrome
386255-02	Straight badge, “AIRSTREAM”, Black Chrome
115809	LP logo wrap

Keder Rail

115686	Extrusion, Keder rail
203914	Insert, 1”, Black
320192	Screw-Flt Head #8 X 3/4" SS For Metal

Reflectors

512967	Reflector, Yellow
512968	Reflector, Red

2021 BASECAMP
DOORS, WINDOWS

Main Door, 16’

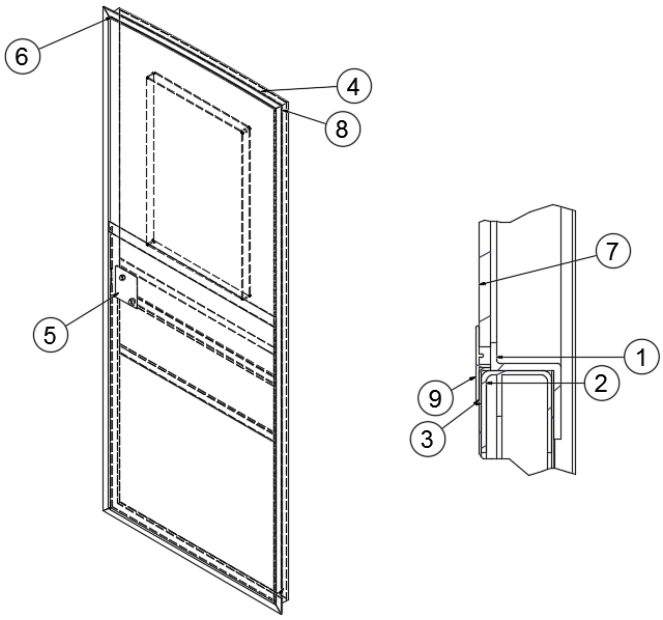

	968440	Main Door
1.	203859	Window trim ring
2.	968439	Door frame assembly
3.	115756	Door skin, Front
4.	115757	Door skin, Back
5.	382311	Main door latch w/deadbolt, Black
6.	365367	Flat gasket
7.	372282	Door window
8.	382451	Piano hinge, Painted at top
9.	0101-0025	Door window extrusion
	968437	Door jamb assembly
	455371	Pocket strike
	365458	Rubber Seal, W/PSA 5/8 X 3/8
	382351	Stowaway Retractable Screen Door, 16’
	382738	Screen Door-Stowaway Retractable BC 20
	382470	Trim-lok, Dual gripper
	116032	Door Stay, Aluminum Support

2021 BASECAMP
DOORS, WINDOWS

Main Door, 20’

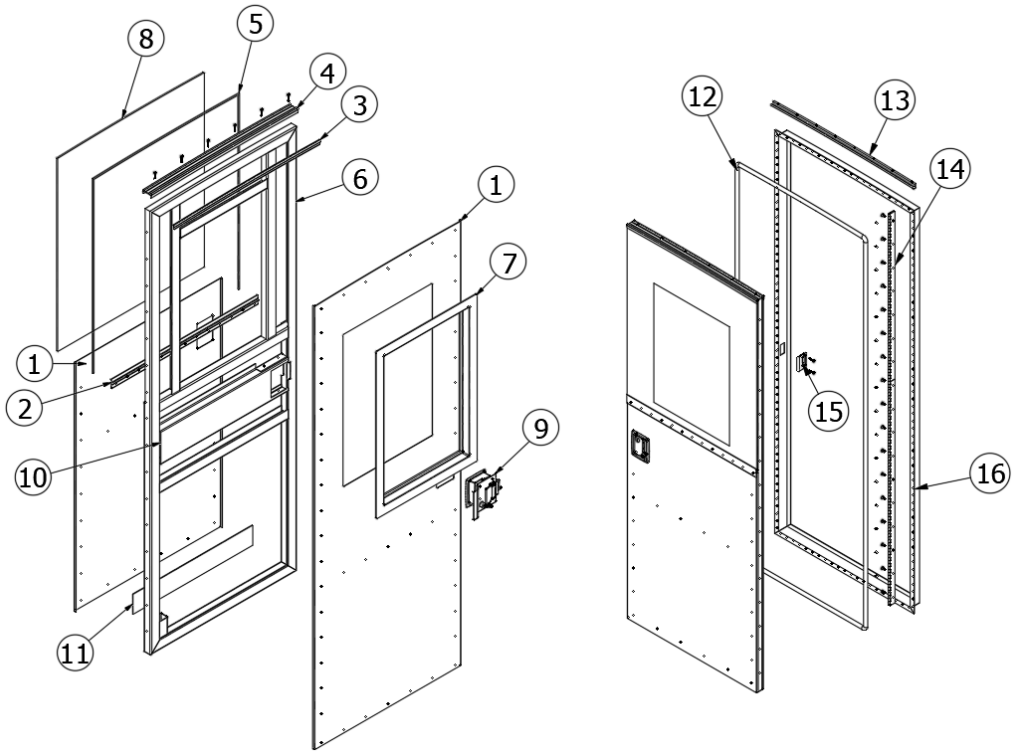

969330 Main Entry Door Assembly BC 20

1.	114879-05	Alum. Sheet .40 X 33 X 173.5" (Sold In A 38 Sf Sheet)
2.	0101-0025	Ext 6158 125" Bonded Sash
3.	114070	Extrusion, J Trim, Mill Finish (Sold In A 12 Ft. Piece)
4.	204166	Door Header Trim
5.	365367	Tape- Foam Automotive 18' RL
6.	969331	Frame Assy - Main Door BC 20
7.	203859	Trim Ring- Window Blk 18X25.5
8.	372308	Window - Door BC 20
9.	382311	Latch-Main Dr W/Deadbolt BLK #0020155
10.	923316	Hat Section Assy BC
11.	116032	Door Stay - Aluminum Support
12.	365458	Rubber Seal, W/PSA 5/8 X 3/8
13.	0106-0015	Extr.5516 95" Eyebrow Trl Door
14.	382452	Hinge-Piano Painted At Top BC
15.	455371	Strike-Main Door BC
16.	923513	Door Jamb Assy BC 20
17.	382470	Trim Lok-Dual Gripper #0011122
	365222-02	Tape Dbl Coated .08 X 1/2" (Sold In A 200 Ft Roll)
	195467-08	Primer Lord's Glue AP-134 GAL.
	195467-18	Glue-Lords Black 400 ML CART.
	195467-180	Dual Application Glue Gun For 7545 A/B

Compartment Door

109867-03	Compartment Door Install
114496-03	Door, Utility compartment
340023-01	Catch and strike, Zinc
380988	Hinge, Continuous
365232	Seal, Baggage door

2021 BASECAMP
DOORS, WINDOWS

Rear Door

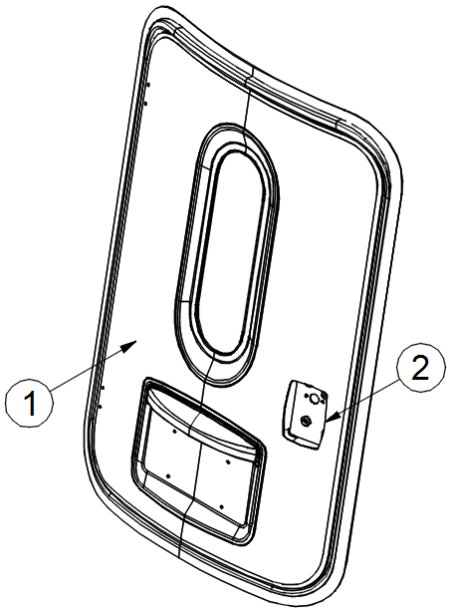

	968465	Rear Door
1.	968461	Fiberglass Rear Door
2.	382312	Rear door latch
	382065	Hinge
	115781	Rear door cam
	0230016	Snap-in plastic bushing, 5/8”
	381423-04	Strike plate
	203873	Rear door closeout
	115783	Rear door latch plate
	372280	Window, Rear cargo door
	802123	Whiteboard, Rear door
	382415	Tapered handle
	365232	Baggage door seal
	360382	Trim seal, 3/16”
	381665	Gasket, D-seal
	455250	Strike plate w/box
	115869	Drip rail, Rear door
	512472	Kit, Door jamb contact

Rear Door Netting

704276	Kit, Rear door netting
704276-01	Strap and mounting bracket for door, 12”
704276-02	Stretch net w/bungee & Brass clips, 7.5” x 7”
704276-03	Stretch net w/bungee & Brass clips, 7.5” x 11”

Windows, 16’

371453	Window assembly, Front center
371452	Window assembly, RS front
371451	Window assembly, RS flat
371459	Window assembly, RS rear
371454	Window assembly, CS front
371458	Window assembly, CS rear
372275	Window, Glass only, Front center
372274	Window, Glass only, RS front
372281	Window, Glass only, RS flat
372277	Window, Glass only, RS rear
372273	Window, Glass only, CS front
372276	Window, Glass only, CS rear
372280	Window, Rear cargo door
372282	Flat door window

Window Trim, 16’

203859	Trim ring, Window
203868-01	Trim ring, Interior front
203868-02	Trim ring, Interior front center
203868-03	Trim ring, Interior front RS
203868-04	Trim ring, Interior rear CS
203868-05	Trim ring, Interior rear RS
203594-04	Ceiling trim, Black

Window Pillar Covers, 16’

203879-01	Pillar cover, CS rear
203879-02	Pillar cover, CS front right
203879-03	Pillar cover, CS front center
203879-04	Pillar cover, RS front center
203879-05	Pillar cover, RS front left
203879-06	Pillar cover, RS rear

2021 BASECAMP
DOORS, WINDOWS

Windows, 20’

372309	Window - Front RS BC 20, Glass Only
372312	Window-Flat RS BC 20, Glass Only
372313	Window RS Curved BC 20, Glass Only
372277-01	Window - Rear RS BC 20, Glass Only
116227	Window Frame Assy-Frt RS BC20
116230	Window Frame Assy-RS Flat BC20
116231	Window Fame RS Curved BC20
115827	Frame-RS Rear Window BC
372280	Window, Rear cargo door
372282	Flat door window

Window Trim, 20’

203859-01	Window Trim Ring W/O Flange
203868-04	Trim Ring- CS Rear
204178	Trim Ring - Interior Frt CS BC
204179	Trim Ring-Interior Frt Ctr BC2
204180	Trim Ring Int Frt RS BC20
204181	Trim Ring - Interior Rear RS
204183	Trim Ring-Int Middle CS BC 20

Window Pillar Covers, 20’

204184-01	Pillar Cover – RS Rear
204184-02	Pillar Cover – RS Rear Middle
204184-03	Pillar Cover – RS Front Middle
204184-04	Pillar Cover – RS Front
204184-05	Pillar Cover – CS Front
204184-06	Pillar Cover – CS Front Middle
204184-07	Pillar Cover – CS Rear Middle
204184-08	Pillar Cover – CS Rear
365302	Tape ½” 3M VHB Tape

Window Coverings, 20’

704275-05	Covering-Window Rear CS BC
704275-06	Covering-Window Headknocker BC
704324-01	Shade-Pull Dr14.50 X22.5 Black Skylight
704343	Window Cover - Rear Door BC
704759	Window Covering - Front RS
704760	Window Covering-Frt Center BC 20
704761	Window Covering-Frt CS BC 20
704762	Window Covering-CS Middle BC20
704763	Window Covering-Rear RS BC 20
382438	Seal-Dual Durometer BC

Window Stone Guards, 16’

923379	Window Stone Guard - RS Solar Basecamp X
923378	Window Stone Guard -CS Solar Basecamp X
923380	Window Stone Guard-Center Solar Basecamp X
382618	Slip Joint Hinge
685361-02	Bracket for Rubber Receptacle
685361-03	Bracket for Rubber Receptacle
685359	Rubber Receptacle
685358	Turn Fast Stud
685362	Retainer Split Ring
685354	Front Window Key
685354-01	Front Window Key

Window Stone Guards, 20’

923526	Solar Guard Assy - Roadside
923527	Solar Guard Assy-Center BC 20
923528	Solar Guard Assy - CS BC 20
382618	Slip Joint Hinge
685361-02	Bracket for Rubber Receptacle
685361-03	Bracket for Rubber Receptacle
685359	Rubber Receptacle
685358	Turn Fast Stud
685362	Retainer Split Ring
685354	Front Window Key
685354-01	Front Window Key

2021 BASECAMP
WINDOW SHADES

Window Shades, 16’

704275-01	Window cover, Front RS
704275-02	Window cover, Front center
704275-03	Window cover, Front CS
704275-04	Window cover, Rear RS
704275-05	Window cover, Rear CS
704275-06	Window cover, Headknocker
704343	Window cover, Rear door
704324-01	Shade, Flat door, 14.75 x 22.5, Black

Window Shades, 20’

704759	Window Covering - Front RS
704760	Window Covering-Frt Center BC 20
704761	Window Covering-Frt CS BC 20
704762	Window Covering-CS Middle BC20
704763	Window Covering-Rear RS BC 20
704275-05	Window cover, Rear CS
704275-06	Window cover, Headknocker
704343	Window cover, Rear door
704324-01	Shade, Flat door, 14.75 x 22.5, Black

Window Shade Hardware

704325-01	Zipper sliders, Black
704325-02	Zipper sliders, Red
704375	Cover, Window latch
700005	Fastener, Cap
700006	Fastener socket
340030	Fastener stud, Nickel Plated
700618	Black hoop, 1”
700617-01	Black hook, 1”
704360	Black nylon tape, 1”
700020	Pile, Velcro
700021	Hook, Velcro, White
703703	Zipper
704365	Black bungee, 3/16”

2021 BASECAMP
ELECTRICAL, 110 VOLT

Shore Line Cord

513809	Smart Plug 30A RV Cordset
513797	Inlet-30a Smartplug-Grey

Converter

512237	Power center, AC/DC, Black, 16’
513802	Power Center 45w Conv Progressive Dynamics, 20’

Breakers

510564-03	Breaker, Bryant, 15-15 Amp
510564-05	Breaker, Bryant, 30-20 Amp
510564-07	Breaker- Bryant 15 GFI
510564-09	Breaker, Bryant 15A SPST
510564-20GFI	Breaker, Type BR, 20 GFI

Junction Boxes

511411	Junction box, 7 terminal
512025-01	Junction Device- White

Receptacles and USB Ports

511814-01	Receptacle, Duplex, Self-contained, Gray
511814-02	Decorative wall plate, Gray
512999-06	Receptacle, 20 Amp, Self-contained, Black
512481-01	Receptacle, 20 Amp, White
500563-04	Decorative wall plate w/screws, White
512986	Pop-up outlet
513331	USB power inlet, Black
513753	Socket-12V Black W/Black Plate
512642-06	Receptacle 15A Single Self Cont Blk
511815-02	Plate-Decorator 1 Gang BLK
511023	Tester Circuit Analyzer 3 Wire

2021 BASECAMP
ELECTRICAL, 12 VOLT

Battery and Battery Box

511828	Battery, 12V deep cycle, AGM (when solar equipped)
455055	Battery box
602192	Vent hose
386318	Folding handle
386319	Draw latch, Over center
203638-01	Cone vent, Battery box vent
203638-02	Grill, Battery box vent
382499-06	Battery vent gasket
204182-01	Battery Box-Dbl Side By Side C
204182-02	Vent Grill Black BC 20
204182-03	Hose Mount Plate Blk BC 20
204182-04	Flexible Hose PVC 1.75" I.D. B

7-Way Cable

500886-01	7-way cable w/plug

Switches

510658	Switch w/weather-proof boot
511975	Switch, 4 gang, Black
513028	Switch, Tank heater, Black w/Red lit lens
511781	Switch Assy-Lighted 2 Gang Rocker Black

Battery Disconnect

510626	Switch, Master battery disconnect
510627	Faceplate, Polished Aluminum

Breakaway Switch

0300027	Breakaway switch, Bargman
454526	Bracket, Breakaway switch

Monitor System

513168	Monitor, Tank system kit (Seelevel)
513168-01	Flush mount monitor panel only
513168-02	Sender pad
512951-02	Seelevel pad harness

2021 BASECAMP
ELECTRICAL, 12 VOLT

Breakers

510947-20	Breaker, 12V DC, Type II
510947-30	Breaker, 12V DC, Type II

Fuses

512318	Fuse holder w/1 amp AGC fuse
512660-50	Terminal fuse, 50 amp, Red
512661	Fuse block, 1 terminal stud
500883-08	Fuse, 12V, 8 amp
500773-30	Fuse, ATC, 12 VDC, 30 AMP
500773-01	Fuse ATC 12V DC 1 AMP
500773-15	Fuse, ATC, 12 VDC, 15 amp
500773-20	Fuse, ATC, 12 VDC, 20 amp

Solar Panel System

513047-01	Solar panel, 80 watt, Zamp
513047-02	Solar panel mounting feet, Zamp
513060	Mounting brackets, Solar panel
513033	Bracket, Portable solar panel port
513475-01	Controller MPPT 150/35
513475-08	Display-Control Blue Solar Charge Controller
513586	Cap-Solar Triple Port

Interior Lights

512478-02	LED light, Wet location
512987	LED spot light w/frosted lens
99900P-1974	Reading light
512803	Light-reading w/sw & frosted light
513752	Light, Push Lens

Exterior Lights

512793	LED porch light, Chrome
512533	Auxiliary light, LED, Surface mount
513025	LED clearance marker, Yellow
513026	LED clearance marker, Red
512964	LED clearance marker, Yellow
512965	LED clearance marker, Red
512971	Light kit, Red identification
512981	LED license plate light

Tail Lights

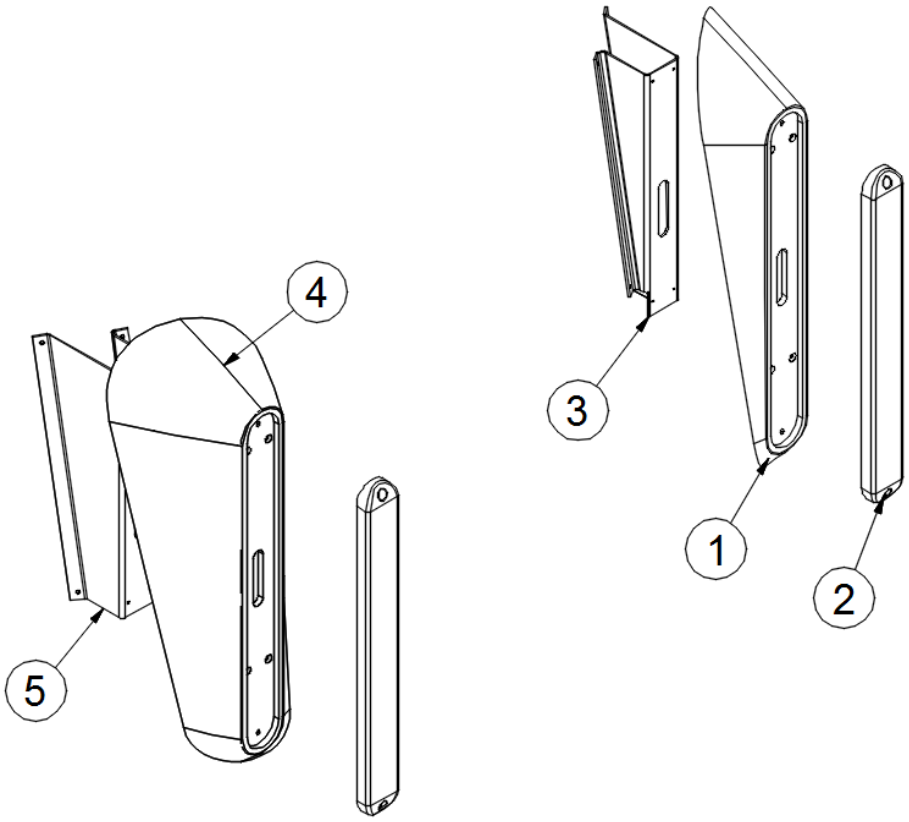

	112294	Tail light Install
1.	115670-01	Casting, CS taillight
2.	512961	Light, Stop/turn/tail, Red
3.	115678-01	Bracket, CS taillight
4.	115670-02	Casting, RS taillight
5.	115678-02	Bracket, RS taillight

Airstream Connected

513777	Assy-White Roof Cap Wifi Prewire
382698	Kit-Gasket WIFI Pre-Wire
513759-01	Kit-White Prewire Antenna WIFI
513516	Router-Pepwave

Contains: OEM Antenna (Short Leads, labeled at both ends)
Mounting Kit (Bracket, Silicon Plug, Mounting Bolts, Spigot)
LTE-A Router
Smart RV WIFI Skin Antenna Gasket (2)
Smart RV WIFI Skin Antenna Gasket (1)

2021 BASECAMP
FLOOR COVERINGS

Floor Coverings

704547	Flooring, Vinyl, Beau Linea
203594-02	Floor trim, Ash Grey
203594-04	Floor trim, Black
703766-01	Adhesive, AAT-272 Super Premium
360407	Microlite Body Filler
203727	Foil, Single bubble flex
802098	Front floor panel
802099	Mid floor panel
802100	Rear floor panel
802101	Rear floor panel, Rear
802102	Rear floor panel, RS
802103	Rear floor panel, CS
703852	Matt-Entrance Airstream Logo

2021 BASECAMP
FURNITURE, STORAGE

Overhead Storage Nets

704271	Net-Overhead Storage Kit, 16’
704271-05	Net-Overhead Storage Kit, 20’
704271-01	Overhead storage net, RS front, 16’, 20’
704271-02	Overhead storage net, RS rear, 16’, 20’
704271-03	Overhead storage net, Front
704271-04	Overhead storage net, CS, 16’, 20’
704282-01	Straps for overhead rail support, 14”

Overhead Bars

115754-01	Overhead bar, Front RS, Silver, 16’
115755-01	Overhead bar, Rear RS, Silver, 16’, 20’
115767-01	Overhead bar, Front center, Silver, 16’
115768-01	Overhead bar, CS rear, Silver, 16’, 20’
116315-01	Overhead Bar, Galley, Silver, 20
115754-02	Overhead bar, Front RS, Red, 16’
115755-02	Overhead bar, Rear RS, Red, 16’, 20’
115767-02	Overhead bar, Front center, Red, 16’
115768-02	Overhead bar, CS rear, Red, 16’, 20’
116315-02	Overhead Bar, Galley, Red, 20’
115754-03	Bar-Overhead Frt RS Yellow Opt – BC, 16’
115755-03	Bar-Overhead - Rear RS Yellow – BC, 16’, 20’
115767-03	Bar-Overhead FRT Center - Yellow Opt, 16’
115768-03	Bar-Overhead - CS Rear Yellow BC, 16’, 20’
116315-03	Overhead Bar, Galley, Yellow, 20’
115754-04	Bar-Overhead FRT RS Orange OPT – BC, 16’
115755-04	Bar-Overhead - Rear RS Orange – BC, 16’, 20’
115767-04	Bar-Overhead FRT Center -Orange Opt, 16’
115768-04	Bar-Overhead - CS Rear Orange BC, 16’, 20’
116315-04	Overhead Bar, Galley, Orange, 20’

Storage Bins

455349	Bin, Plumbing storage

2021 BASECAMP
FURNITURE, STORAGE

Rear Storage Compartment, Floor

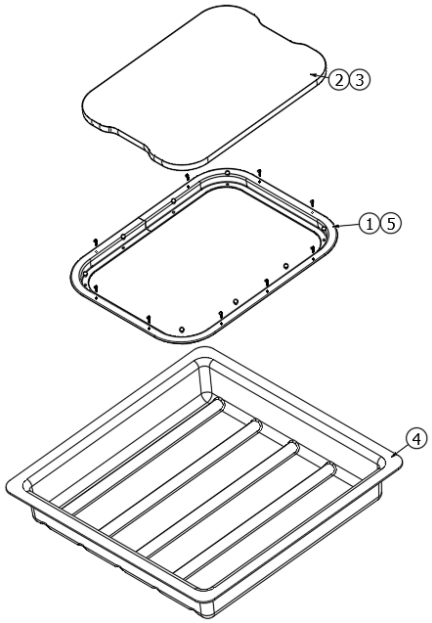

1.	116214	Extrusion, Bath Door
2.	113312&000218HC	Pre Laminate .75 x 23.50 x 17.50
3.	203440	T Molding-Black Embossed .8125
4.	204177	Box-Rear Floor Storage BC 20
5.	382711	Bumper Rubber 7/16" Dia
	386435	Label-Max Weight

Plumbing Storage

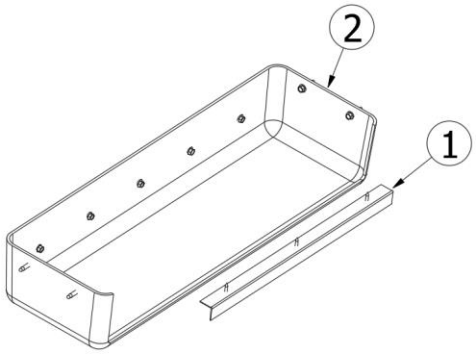

114812	Aluminum Angle 1 x 1 x 18
204186	Plumbing Storage Bin

2021 BASECAMP
FURNITURE, LAVATORY

Bath Module, 16’

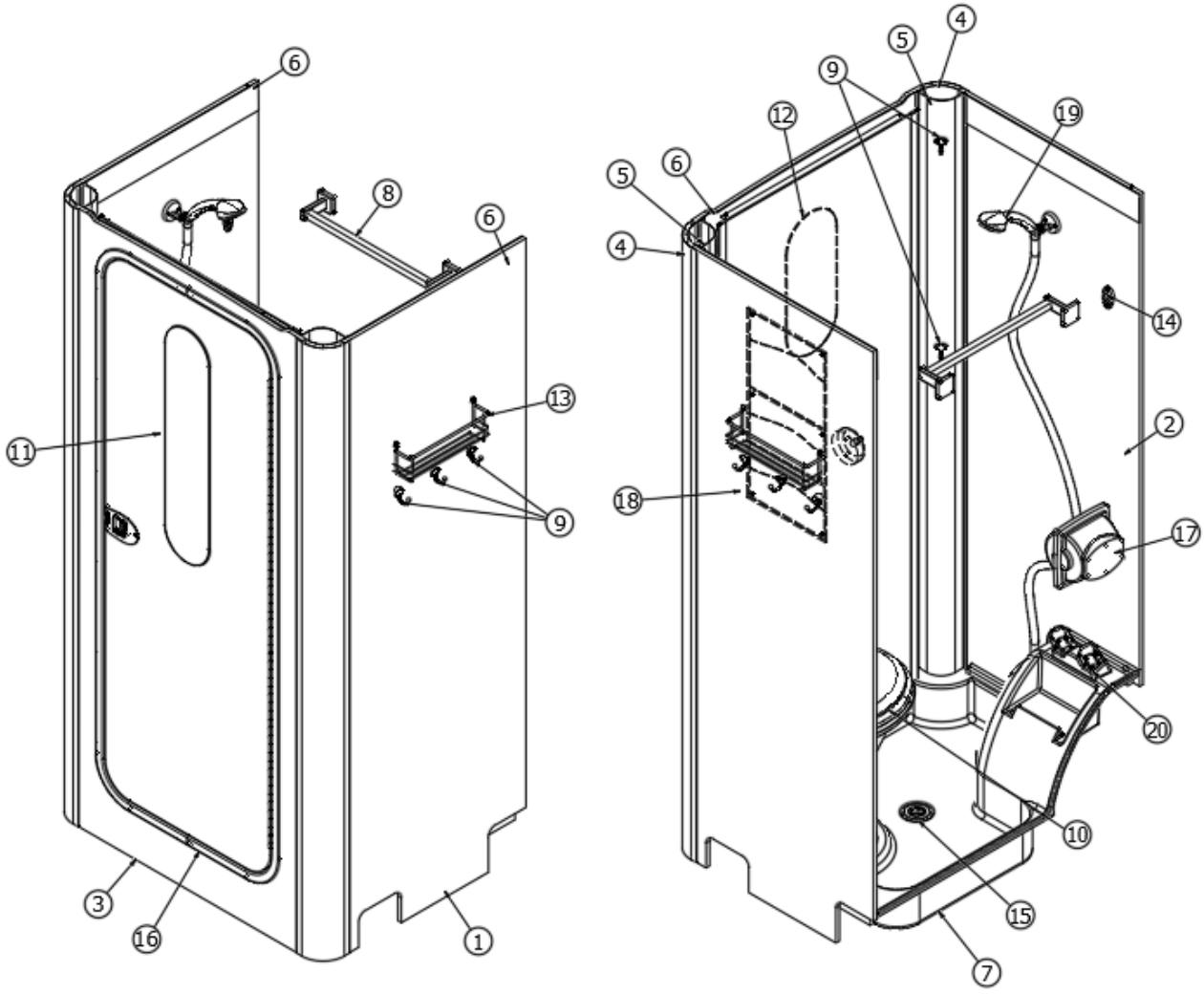

Parts Listed on Next Page

2021 BASECAMP
FURNITURE, LAVATORY

Bath Module, 16’

1.	113116&000112BJ	Pre Laminate - .50 X 25.50 X 74.40
2.	113116&000212BJ	Pre Laminate - .05 X 25.41 X 74.76
3.	113116&000312BJ	Pre Laminate - .05 X 32.00 X 75.05
4.	115682	Extrusion-3"Rad Corner .5 PNL 90"
5.	115683	Extrusion-2"Rad Inner Corner BC
6.	114880	C/O - Alum - Wetbath - 3.50" X 24.63
7.	203829	Shower Pan- Basecamp
8.	602284	Towel Bar-18" SS Polished 5518
9.	381834	Hook- Coat Aluminum #1760A1
10.	690621-BOX	Toilet-China White, Single Box
11.	371455	Mirror - Bathroom Radius 6.25 X 28.375
12.	371456	Mirror Bath Int Of Door Radius 7.125 X 17.187
13.	382052	Spice Rack-Chrome BC/SP
14.	382063	Clothesline-Retractable #Dry-01101
15.	195362-39	2"" Strainer ,Model # 7466JR
16.	969166	Assembly, Bath Door
17.	602175	Holder-Dryroll Toilet Roll White
18.	704272	Caddy-Bathroom Grey 23x11
19.	601358	Shower Hdw Unit, Chrome (Head, Hose, Etc.)
20.	604877-01	Shower Valve 4 Cp W/Flt Wshr
	381081-04	Snap Cap White (Screw Size #6,#8)
	700822	Velcro Hook, Circle - Adhesive
	704679	Shower Curtain-Basecamp

2021 BASECAMP
FURNITURE, LAVATORY

Bath Module, 20’

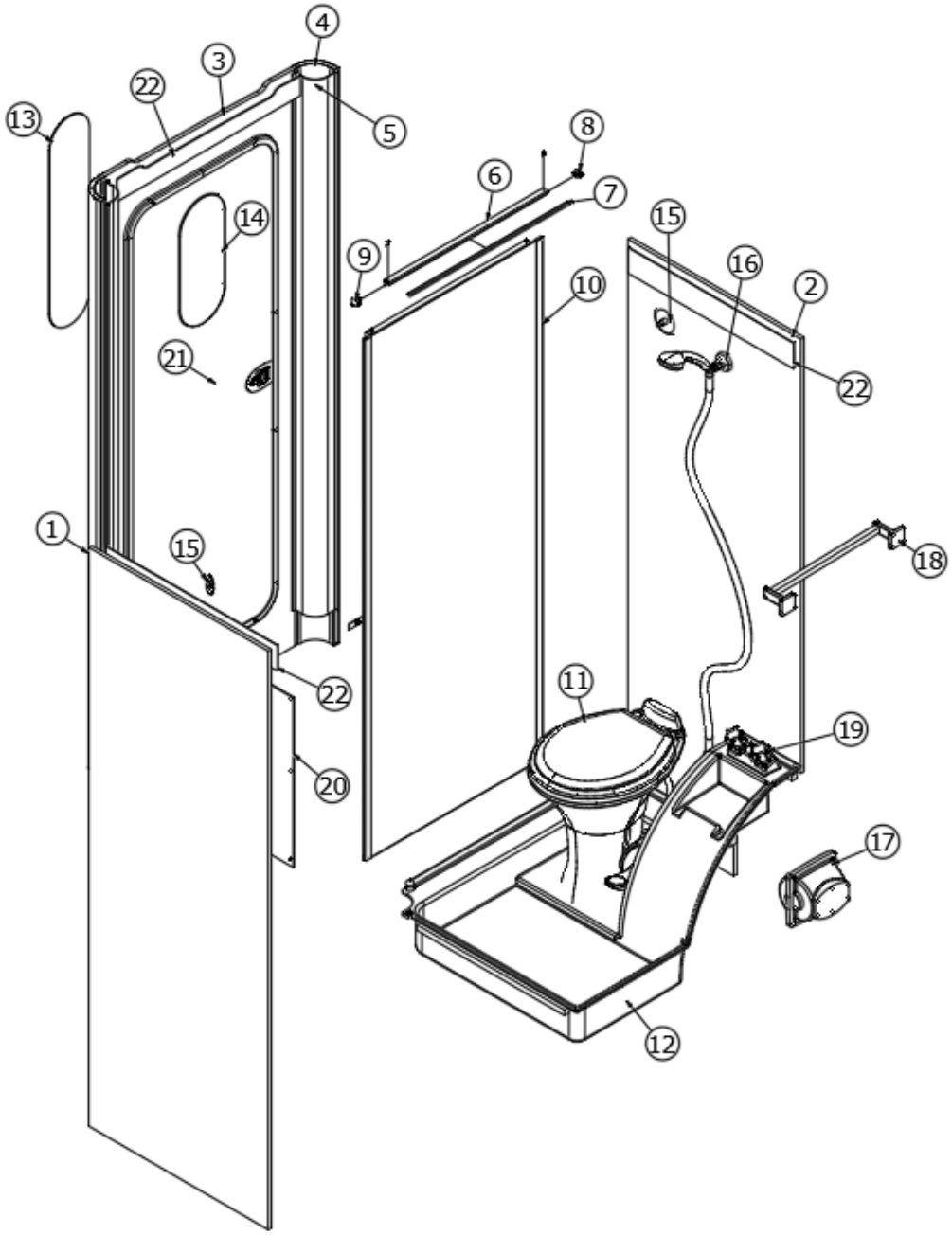

Parts Listed on Next Page

2021 BASECAMP
FURNITURE, LAVATORY

Bath Module, 20’

113268 Bath Module Install BC 20

1.	113268&000112BJ	Panel-Prelam .50 X 28.17 X 78.65
2.	113268&000212BJ	Panel-Prelam .50 X 27.20 X 78.25
3.	113268&000312BJ	Panel Prelam .50 X 31.22 X 79.00
4.	115682	Extrusion-3"Rad Corner .5 PNL 90"
5.	115683	Extrusion-2"Rad Inner Corner BC
6.	101225	Extr. Alum Curtain Track Attach
7.	101217	Extrusion Curtain Track
8.	200784	Ends,Curtain Track RH White
9.	200785	Ends,Curtain Track LH White
10.	704679	Shower Curtain-Basecamp
	703467-03	Shower Curtain Strap
11.	690621-BOX	Toilet-China White, Single Boxed
12.	204172	Shower Pan BC 20
13.	371455	Mirror - Bathroom Radius 6.25 X 28.375
14.	371456	Mirror Bath Int Of Door Radius 7.125 X 17.187
15.	382063	Clothesline-Retractable
16.	601358	Shower Hdw Unit, Chrome
17.	602175	Holder-Dryroll Toilet Roll White
18.	602284	Towel Bar-18" SS Polished 5518
19.	604877-01	Shower Valve 4 CP W/FLT WSHR
20.	704272	Caddy-Bathroom Grey 23x11 BC
21.	969166	Assembly, Bath Door
22.	114880	C/O - Alum - Wetbath - 3.50" X 24.63
	365411-01	Edgebanding 1MM Steel Mesh 5/8"
	365395-01	Edgebanding 1MM 5/8" Crisp Linen

2021 BASECAMP
FURNITURE, LAVATORY

Bath Door

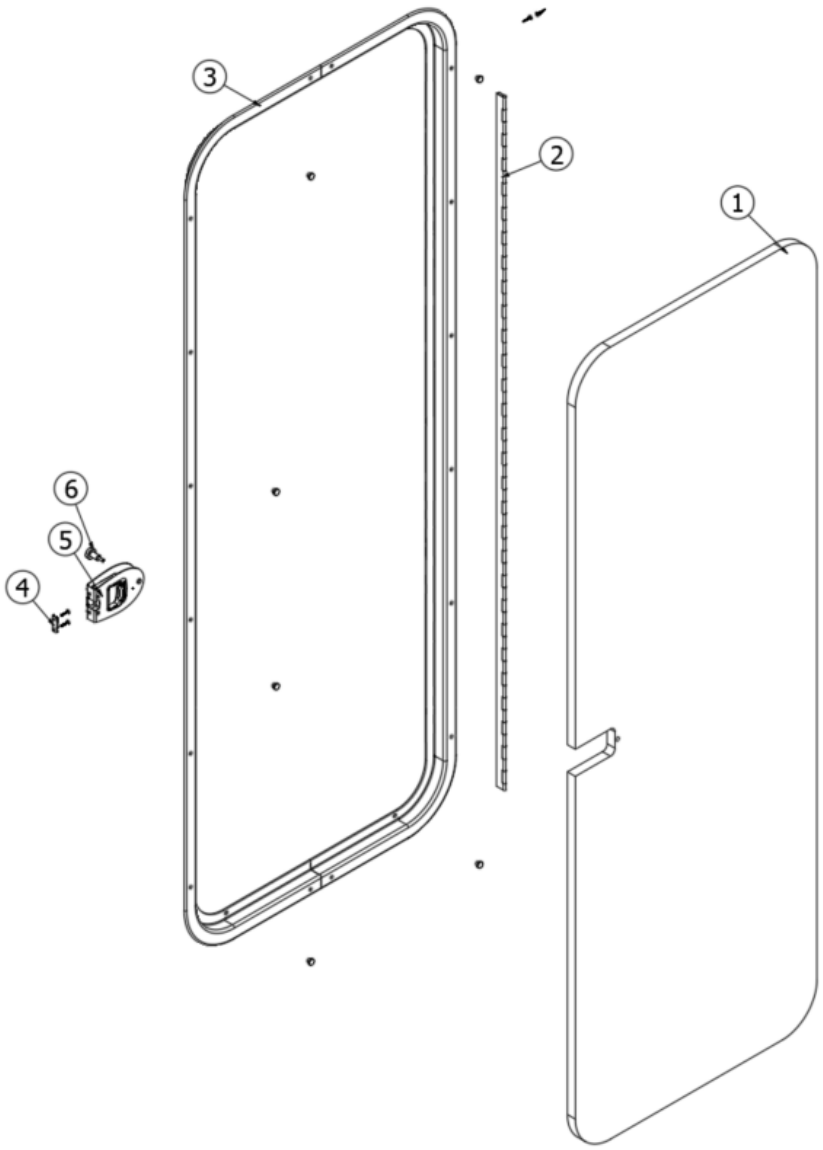

969166 Assembly, Bath Door

1.	969166&000118BJ	Pre Laminate-.75X22.92X65.17 EB9-C04
2.	382731	Hinge-Cont.-Clear Anodized 57"
3.	116121	Assy, Door Frame, Bath
4.	382061	Striker-Omni Flat Latch #MR901
5.	382055	Latch-Privacy Omni For .75 Door
6.	382744	Knob-3/4" Round SS
	382711	Bumper Rubber 7/16" Dia
	365464-02	Edgebanding 2MM-15/16" Crisp Linen
	365465-02	Edgebanding 2MM - 15/16" Steel Mesh

2021 BASECAMP
FURNITURE, GALLEY

Galley Top, 16’

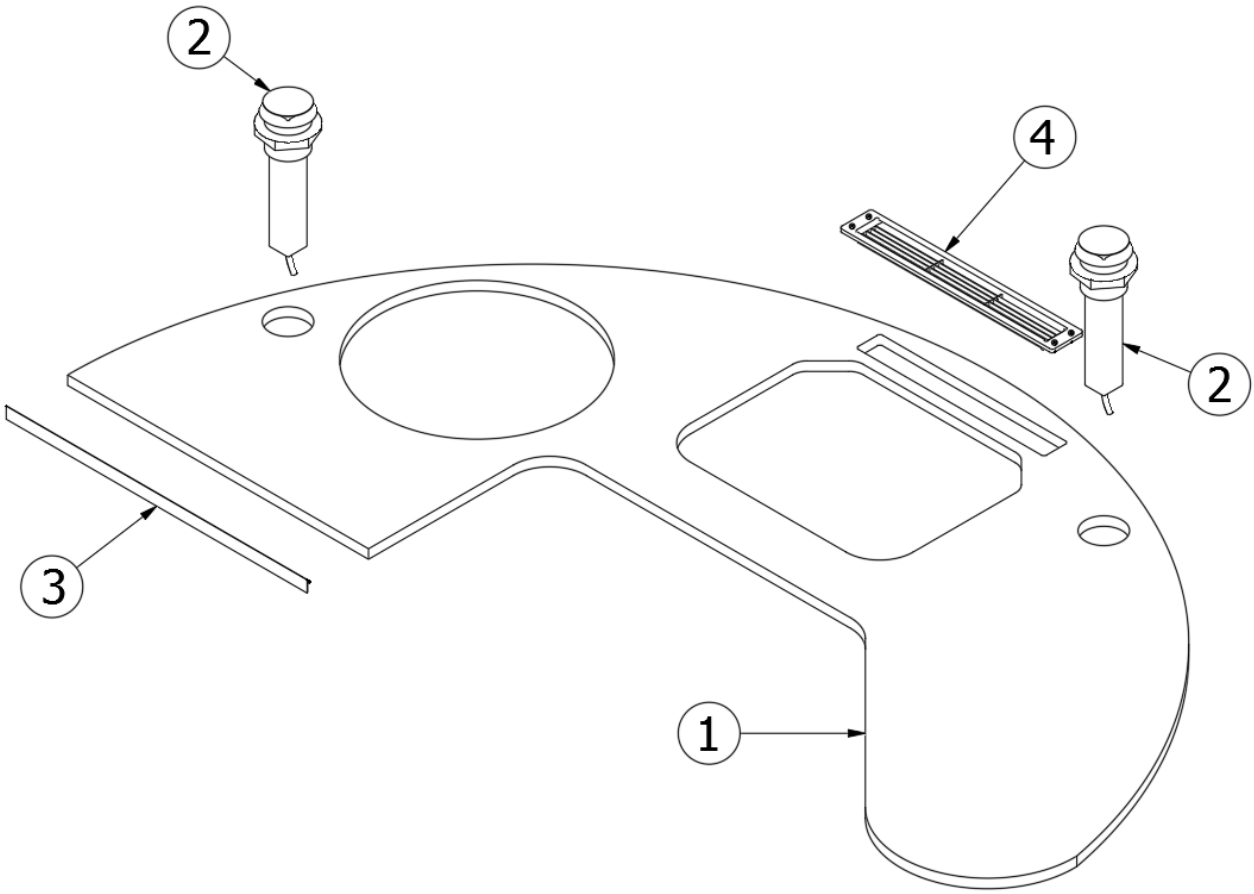

	968990	Assembly, Galley Top
1.	968990&000118JC	Panel, 76.57 X 38.29
2.	512986	Outlet - Pop Up BC
3.	115064	Trim-Alum Counter Top
4.	386206	Vent-Louvered 2.63x17.5 Blk #337211-1WM
	203941-01	Molding-5 7/8" Putty Gray (Crisp Linen)
	203942-01	Molding-T 13/16 Storm Gray (Steel Mesh)
	386349	Grommet, Black Plastic, 3.25" DIA.

2021 BASECAMP
FURNITURE, GALLEY

Galley Cabinet, RS 16’

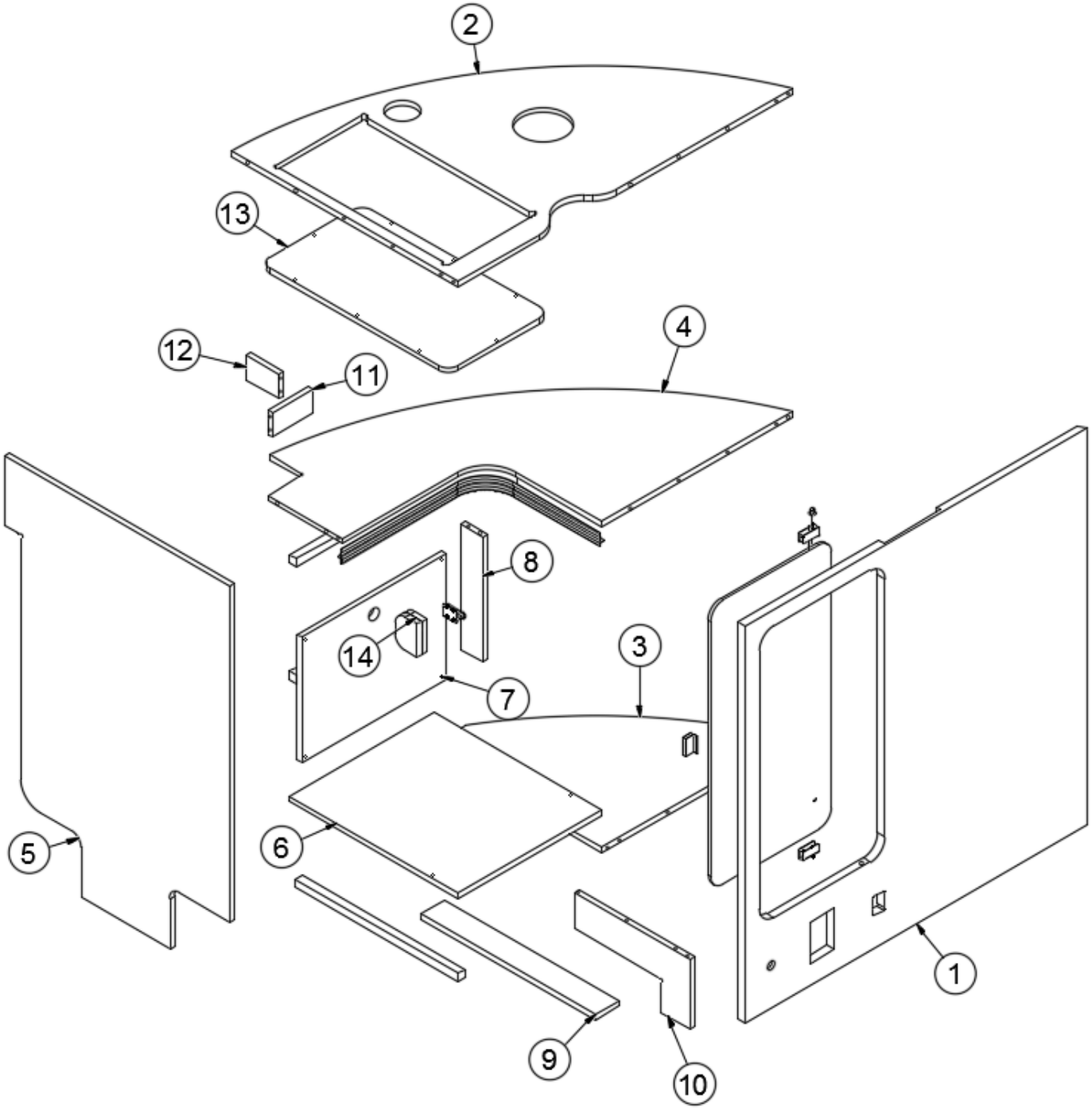

Parts Listed on Next Page

2021 BASECAMP
FURNITURE, GALLEY

Galley Cabinet, RS 16’

968382 RS Galley Cabinet

1.	968382&000118HC	Panel, 35.63 X 35.75
2.	968382&000212CC	Panel, 23.28 X 34.83
3.	968382&000312CC	Panel, 12.13 X 19.78
4.	968382&000412CC	Panel, 23.05 X 34.83
5.	968382&000512CC	Panel, 23.25 X 35.75
6.	968382&000612CC	Panel, 15.00 X 17.50
7.	968382&000712CC	Panel, 15.00 X 11.25
8.	968382&000812CC	Panel, 2.25 X 11.25
9.	968382&000912CC	Panel, 2.50 X 18.13
10.	968382&001012CC	Panel, 6.25 X 12.00
11.	968382&001112CC	Panel, 2.25 X 4.25
12.	968382&001212CC	Panel, 2.25 X 3.13
13.	968382&001312CC	Panel, 10.50 X 19.50
14.	204257	Spacer - Door Catch
	372283	Glass door, 12.75 x 26
	381654	Hinge, Glass door, Black
	381653	Glass catch
	381707	Glass strike/pull
	968385	Cutlery tray
	365340-01	Edgebanding- .63" Frosty White
	203440	T Molding-Black Embossed .8125"

2021 BASECAMP
FURNITURE, GALLEY

Galley Cabinet, CS 16’

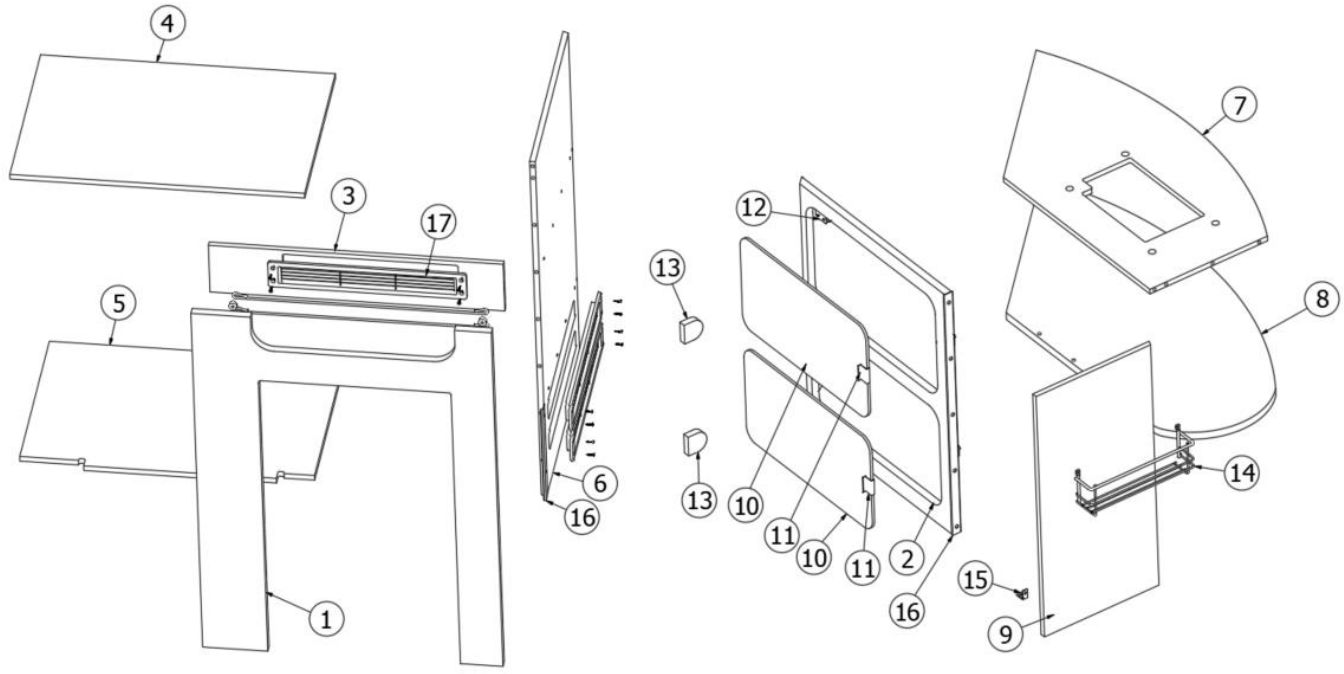

	968988-01	Assembly, Galley Cabinet CS
	968988-02	Assembly, Galley Cabinet CS, Microwave Option

1.	968988&010118HC	Panel, 35.75 X 26.50
2.	968988&010218HC	Panel, 25.75 X 22.00
3.	968988&010312HC	Panel, 5.00 X 26.00
4.	968988&010412CC	Panel, 18.00 X 26.00
5.	968988&010512CC	Panel, 22.31 X 26.00
6.	968988&010612HC	Panel, 35.75 X 19.56
7.	968988&010712CC	Panel, 17.38 X 35.00
8.	968988&010818JC	Panel, 18.13 X 40.38
9.	968988&010912HC	Panel, 25.75 X 12.63
10.	372284	Glass-Door 18.5X9.8
11.	381707	Strike W/Pull-Glass Door Black
12.	382306	Glass door pull, lower and upper
13.	204257	Spacer - Door Catch
14.	382052	Spice Rack-Chrome BC/SP
15.	382308	Bracket-135 Deg.Corner Brace #10-1682
16.	116079	Extrusion, Corner Nosing, 12' X 7/8”
17.	386206	Vent-Louvered 2.63x17.5 Blk #337211-1WM
	381654	Hinge-Non Bore Glass Dr.Black XL
	704257	Kit-22" Bungee (2)Cords (4) Holders
	381653	Latch-Single Touch Black

End Cabinet, CS, 16’

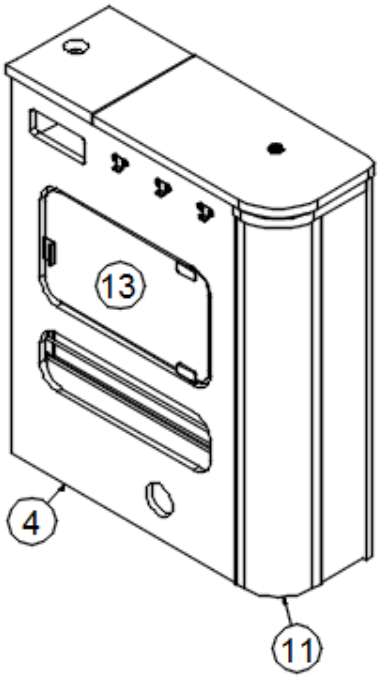

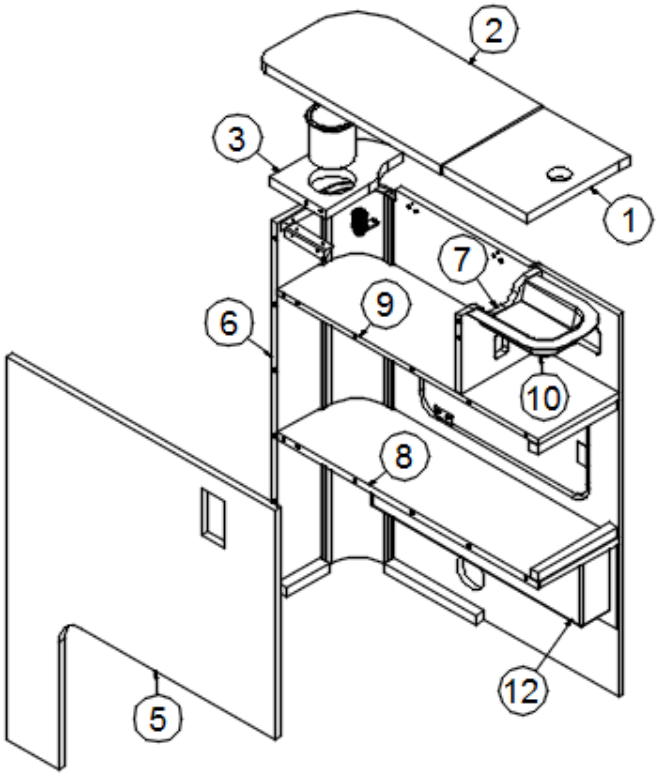

Parts Listed on Next Page

2021 BASECAMP
FURNITURE, GALLEY

End Cabinet, CS, 16’

	968413	CS End Cabinet
1.	968413&000118JC	Panel, 9.00 X 7.59
2.	968413&000218JC	Panel, 9.00 X 16.38
3.	968413&000318JC	Panel, 7.75 X 5.00
4.	968413&000412HH	Panel, 0.53 x 29.25
5.	968413&000512HH	Panel, 23.66 x 29.25
6.	968413&000612HH	Panel, 4.50 X 28.25
7.	968413&000712HH	Panel, 6.00 X 7.00
8.	968413&000812CC	Panel, 23.13 X 7.00
9.	968413&000912CC	Panel, 23.06 X 7.00
10.	200773	Closeout, Reading light
11.	115682	Extrusion, 3” radius corner
12.	203384-01	Spice rack
13.	372285	Glass door, 14.5 x 8.31
	381654	Hinge, Glass door, Black
	381707	Glass strike/pull
	386279	Corner brace
	382152	Hook, Hammock, Stainless Steel
	203196	Cup holder, 3”, Black
	382238	Hinge, Compact
	381209-01	Grommet w/cap, Black
	365340-01	Edgebanding, .63”, Frosty White
	365395-02	Edgebanding, .94”, Crisp Linen
	365411-02	Edgebanding, .94”, Steel Mesh
	203440	T-molding, Black embossed, .8125
	203710	T-molding, Almond
	704258	Bungee kit, 17”
	381912-01	Cam lock, Max latch 2.06, Keyed alike
	204257	Spacer - Door Catch

2021 BASECAMP
FURNITURE, GALLEY

Galley Top, 20’

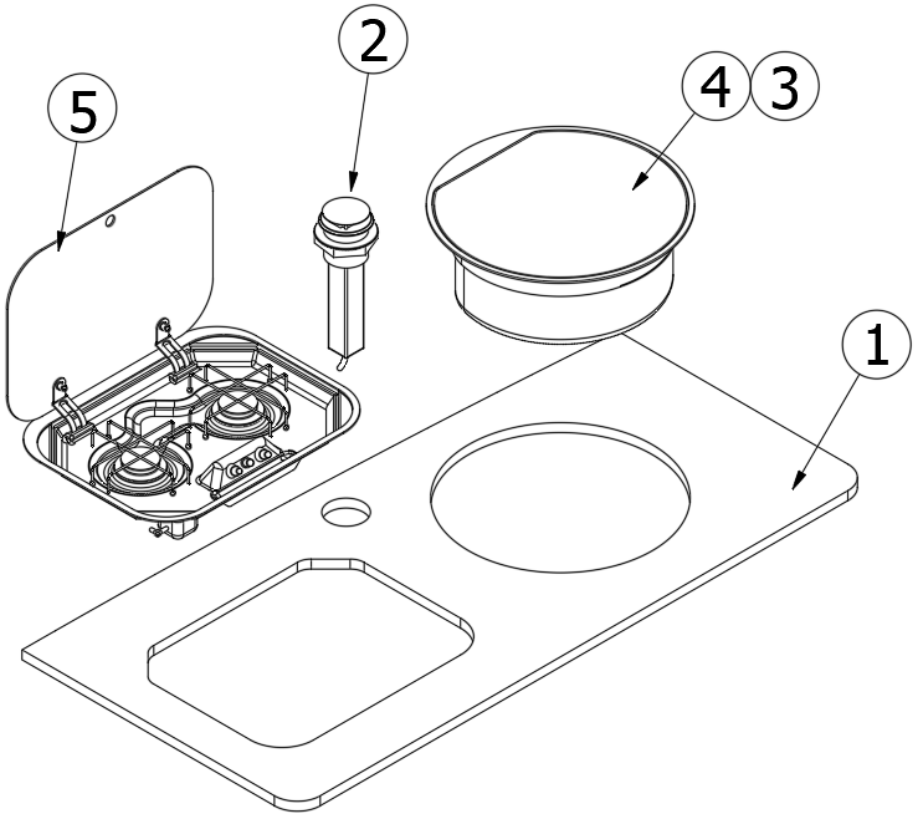

1.	969358	Top Assy - Galley BC20
2.	512986	Outlet - Pop Up BC
3.	601813	Tail Piece-Lift/Turn Drain
4.	602197	Sink W/Faucet-Smev
5.	690576	Cooktop-2 Burner Smev 8022 St.Satin

2021 BASECAMP
FURNITURE, GALLEY

Galley Cabinet Assembly, 20’

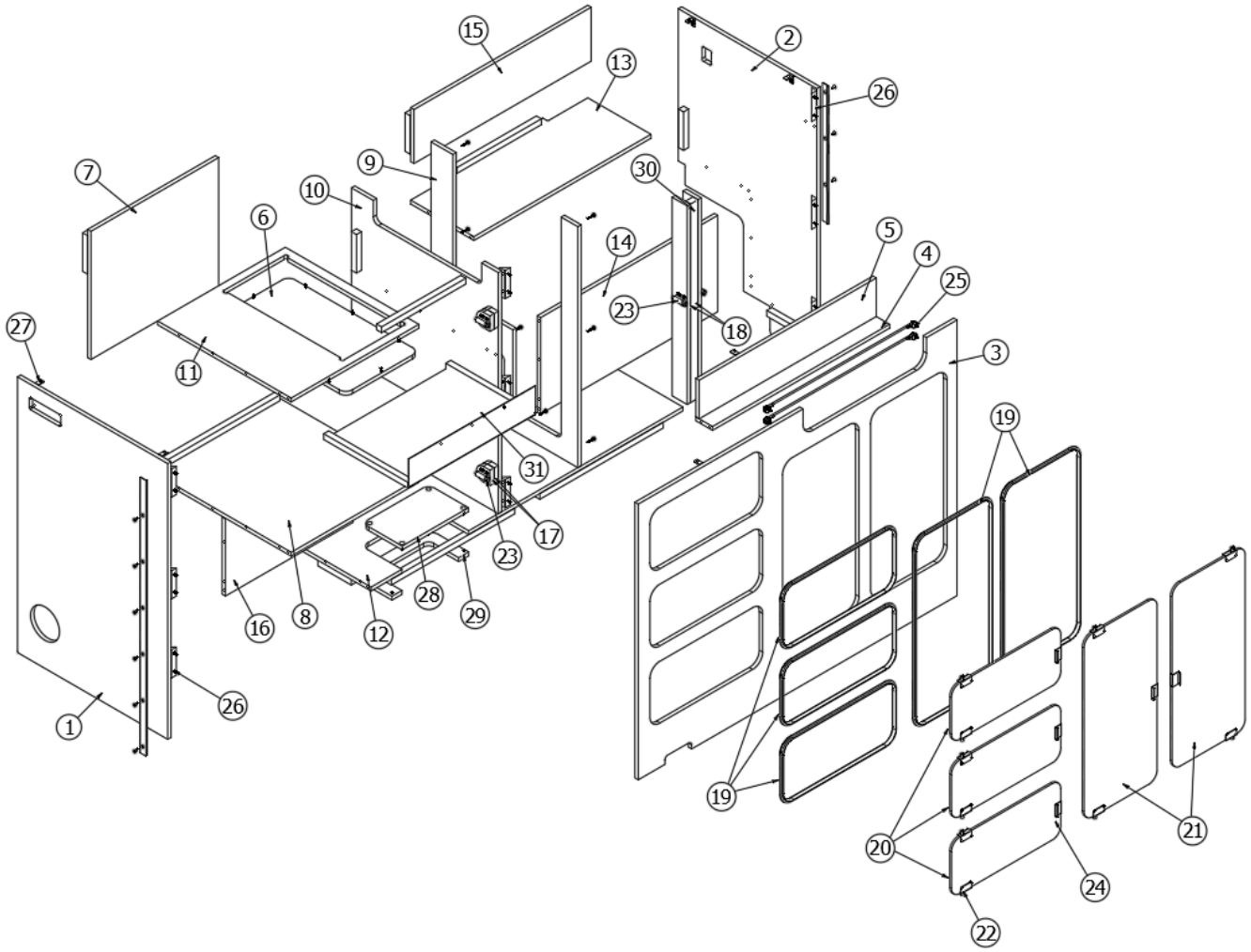

Parts Listed on Next Page

2021 BASECAMP
FURNITURE, GALLEY

Galley Cabinet Assembly, 20’

969357 Assembly, Galley Cabinet

1.	969357&000112HC	Pre Laminate- 0.50 X 22.50 X 35.75
2.	969357&000212HC	Pre Laminate- 0.50 X 20.47 X 35.75
3.	969357&000312HC	Pre Laminate- 0.50 X 48.00 X 35.75
4.	969357&000412CC	Pre Laminate- 0.50 X 2.50 X 26.88
5.	969357&000512CC	Pre Laminate- 0.50 X 5.00 X 26.88
6.	969357&000612CC	Pre Laminate- 0.50 X 19.00 X 10.50
7.	969357&000703CE	Pre Laminate- 0.13 X 19.13 X 16.63
8.	969357&000812CC	Pre Laminate- 0.50 X 20.88 X 19.13
9.	969357&000912CC	Pre Laminate- 0.50 X 22.18 X 31.25
10.	969357&001012CC	Pre Laminate- 0.50 X 22.18 X 31.25
11.	969357&001112CC	Pre Laminate- 0.50 X 20.00 X 19.13
12.	969357&001212CC	Pre Laminate- 0.50 X 11.00 X 47.00
13.	969357&001312CC	Pre Laminate- 0.50 X 10.72 X 26.88
14.	969357&001412CC	Pre Laminate- 0.50 X 26.88 X 12.50
15.	969357&001503CE	Pre Laminate- 0.13 X 26.88 X 7.00
16.	969357&001612CC	Pre Laminate- 0.50 X 19.13 X 10.00
17.	969357&003312CC	Pre Lam- 2.25X25.75
18.	969357&001818CC	Pre Laminate- 0.75 X 2.00 X 2.00
19.	203445	T-Molding Blk Flexible Poly .56"
20.	372317	Glass Door, 7.300 X 16.375
21.	372318	Glass Door, 11.063 X 23.800
22.	381654	Hinge-Non Bore Glass Dr.Black XL
23.	381653	Latch-Single Touch Black XLLY
24.	381707	Strike W/Pull-Glass Door Black
25.	704257	Kit-22" Bungee (2)Cords (4) Holders
26.	386279	Brace-Corner .75X.75X3.5
27.	380041	Brace 1"" Stanley Corner
28.	969357&003112CC	Pre Lam-.50 X 5.97 X 9.94
29.	969357&003212CC	Pre Lam- .50 X 6.00 X 11.50
30.	969357&003418JC	Pre Lam-.75 X 1.13 X 25.75
31.	116319	Stovetop Close Out
	365411-01	Edgebanding 1MM Steel Mesh 5/8"
	365395-01	Edgebanding 1MM 5/8" Crisp Linen
	511975	Switch Assy-4 Gang BLK
	513331	Inlet-Usb Power Blk Poly Fuse
	968385	Tray-Cutlery Insert BC
	381834	Hook- Coat Aluminum
	382152	Hook-Hammock SS
	204257	Spacer - Door Catch

2021 BASECAMP
FURNITURE, GALLEY

Refrigerator Cabinet Assembly, 20’ No Microwave

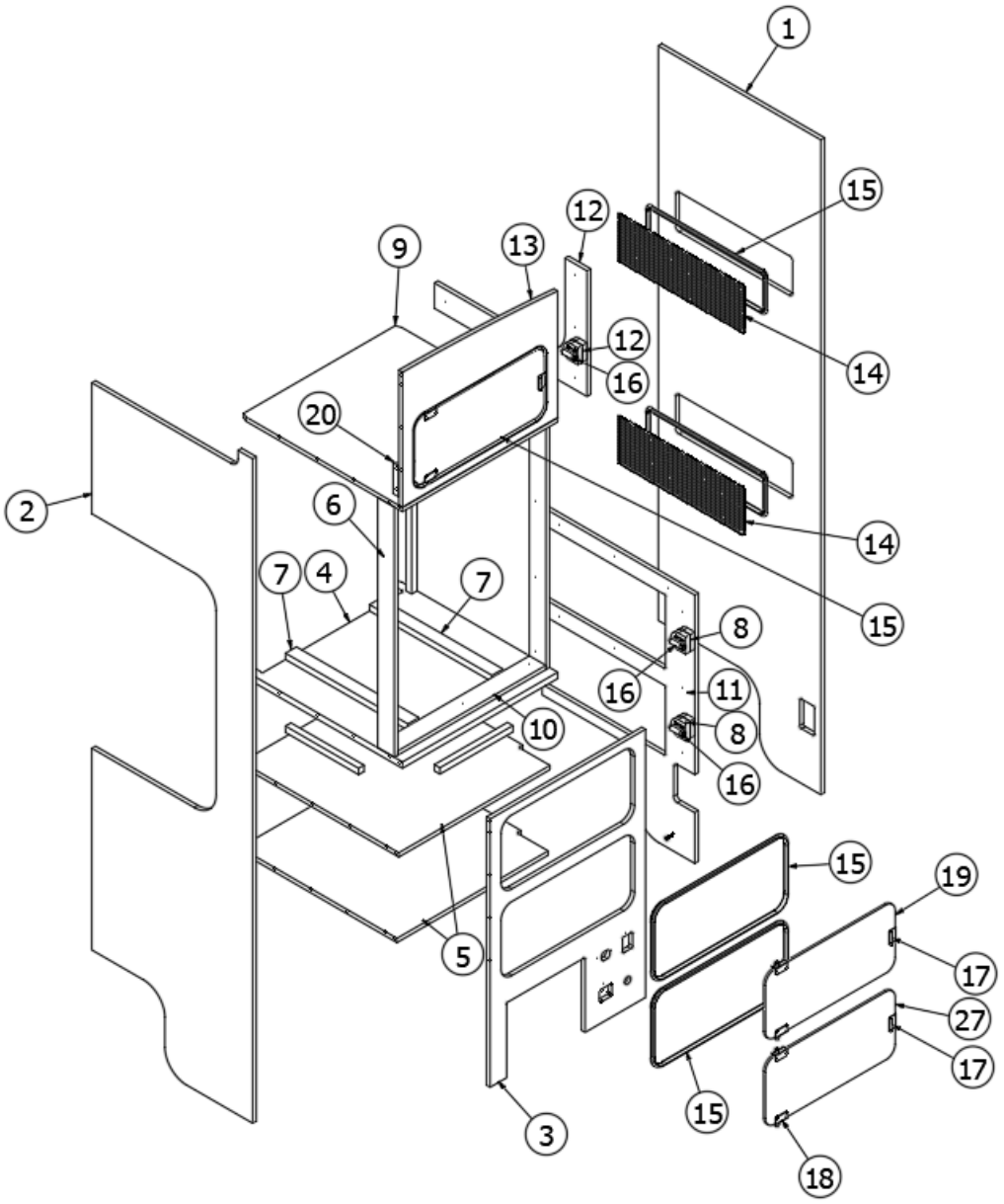

Parts Listed on Next Page

Refrigerator Cabinet Assembly, 20’ No Microwave

969361 Assembly, Refer Cabinet

1.	969361&000112JC	Pnl-Prelam .50X22X77.50
2.	969361&000212CC	Pre Laminate- 0.50 X 22.00 X 78.63
3.	969361&000412JC	Pnl Prelam.50X21.25X31.75
4.	969361&000618HC	Pnl Prelam .75 X 22.00X21.25
5.	969361&000712CC	Pnl-Prelam .50 X 21.50 X 21.25
6.	969361&000912CC	Pre Laminate- 0.50 X 2.25 X 29
7.	969361&001118HC	Prelam .75 X 1.50 X 16.75
8.	204257	
9.	969361&001812CC	Pre Laminate- 0.50 X 20.00 X 21.25
10.	969361&003012CC	Pnl-Prelam 2.25 X 20.25
11.	969361&003312CC	Prelam .50 X 21.50 X 31.75
12.	969361&003612CC	Prelam .50 X 20.88 X 14.88
13.	969361&003712JC	Prelam .50X21.25X16.00
14.	115855	Alum-Perforated .063 X 48 X 120
15.	203445	T-Molding Blk Flexible Poly .56"
16.	381653	Latch-Single Touch Black XLLY
17.	381707	Strike W/Pull-Glass Door Black
18.	381654	Hinge-Non Bore Glass Dr.Black XL
19.	372315	Glass Door, Refer
20.	386279	Brace-Corner .75 X .75 X 3.5
	969361&001012CC	Pre Laminate- 0.50 X 2.25 X 20
	365411-01	Edgebanding 1MM Steel Mesh 5/8"
	365411-02	Edgebanding-15/16" 1MM Steel Mesh
	365395-01	Edgebanding 1MM 5/8" Crisp Linen
	365395-02	Edgebanding-.94" Crisp Linen
	800422	Dowel Pin 1/4X1-1/4

2021 BASECAMP
FURNITURE, GALLEY

Refrigerator Cabinet Assembly, 20’ Microwave Option

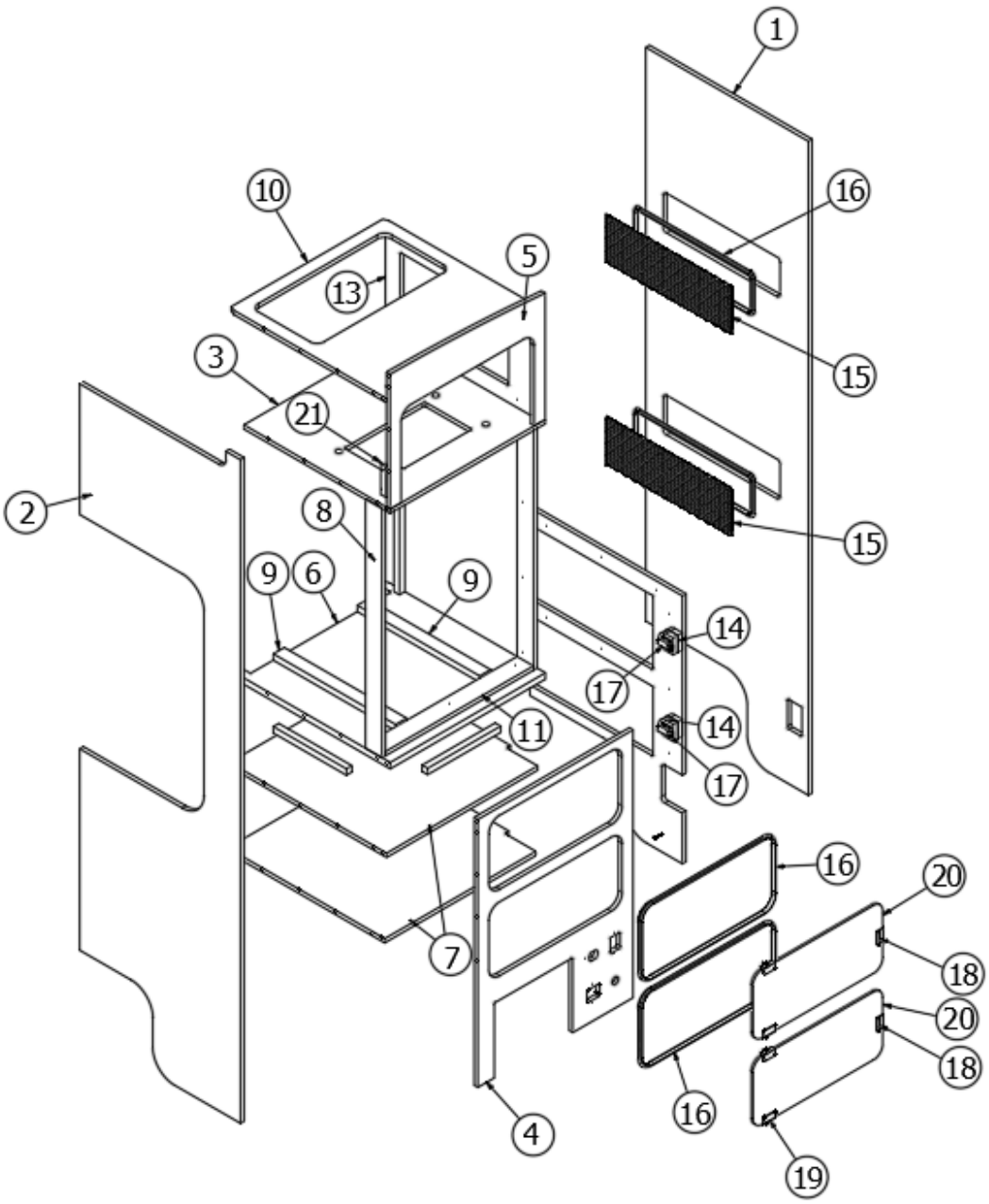

Parts Listed on Next Page

Refrigerator Cabinet Assembly, 20’ Microwave Option

969361-01 Assembly, Refer Cabinet

1.	969361&010112JC	Pnl-Prelam .50X22X77.63
2.	969361&010212CC	Pre Laminate- 0.50 X 22.00 X 78.63
3.	969361&010312CC	Pre Laminate- 0.50 X 20.00 X 21.25
4.	969361&000412JC	Pnl Prelam.50X21.25X31.75
5.	969361&010512JC	Prelam .50 X 21.25 X 16.00
6.	969361&010618HC	Prelam .75 X 22.00 X 21.25
7.	969361&010712CC	Pre Laminate- 0.50 X 21.25 X 21.25
8.	969361&010912CC	Pre Laminate- 0.50 X 2.25 X 29.63
9.	969361&011118HC	Prelam .75 X 1.50 X 16.75
10.	969361&011312CC	Pre Laminate- 0.50 X 21.25 X 21.25
11.	969361&013012CC	Pnl-Prelam 2.25X20.25
12.	969361&003312CC	Prelam .50 X 21.50 X 31.75
13.	969361&003412CC	Prelam .50 X 20.88 X 12.38
14.	204257	Spacer, Door Catch
15.	115855	Alum-Perforated .063 X 48 X 120
16.	203445	T-Molding Blk Flexible Poly .56"
17.	381653	Latch-Single Touch Black XLLY
18.	381707	Strike W/Pull-Glass Door Black
19.	381654	Hinge-Non Bore Glass Dr. Black XL
20.	372315	Glass Door, Refer
21.	386279	Brace-Corner .75 X .75 X 3.5
	969361&011012CC	Pre Laminate- 0.50 X 2.25 X 20.25
	365411-01	Edgebanding 1MM Steel Mesh 5/8"
	365411-02	Edgebanding-15/16" 1MM Steel Mesh
	365395-01	Edgebanding 1MM 5/8" Crisp Linen
	365395-02	Edgebanding-.94" Crisp Linen
	800422	Dowel Pin 1/4X1-1/4

Storage Cabinet, 20’

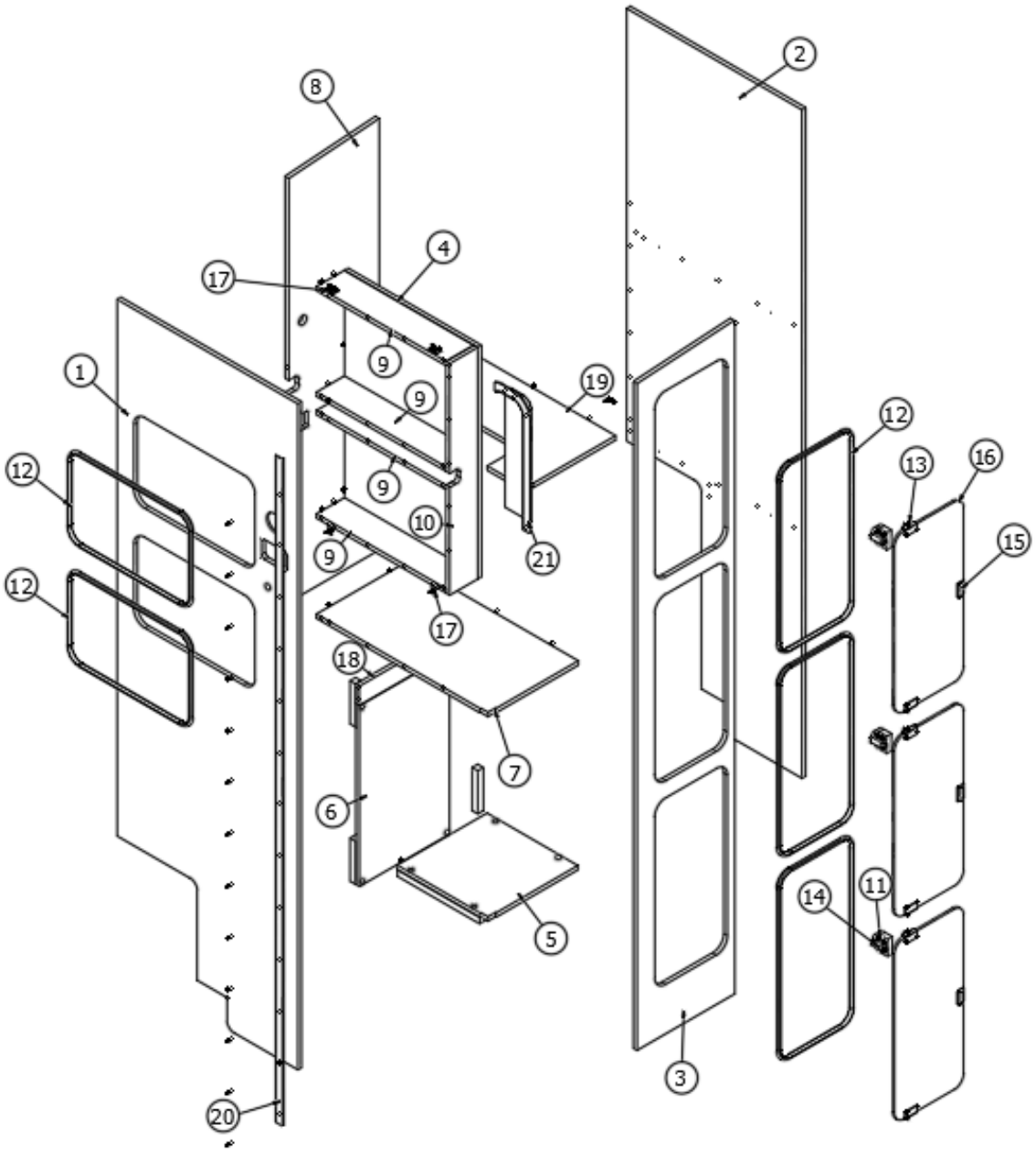

Parts Listed on Next Page

Storage Cabinet, 20’

969362 Assembly, Storage Cabinet

1.	969362&000112JC	Panel-0.50X24.20X77.26
2.	969362&000312CC	Pre Lam- 0.50X23.50X77.56
3.	969362&000412JC	Panel-0.50X13.13X78.19
4.	969362&000512CC	Panel-0.50X17.88X26.88
5.	969362&000812CC	Pre Laminate- 0.50 X 12.19 X 12.06
6.	969362&000912CC	Pre Laminate- 0.50 X 12.09 X 20.97
7.	969362&001012CC	Pre Laminate- 0.50 X 12.13 X 23.00
8.	969362&001212CC	Pre Laminate- 0.50 X 12.13 X 50.06
9.	969362&001312CC	Pre Laminate-3.75 X 17.38
10.	969362&001412CC	Pre Laminate- 0.50 X 3.75 X 26.88
11.	204257	Spacer - Door Catch
12.	203445	T-Molding Blk Flexible Poly .56"
13.	381654	Hinge-Non Bore Glass Dr.Black XL
14.	381653	Latch-Single Touch Black XLLY
15.	381707	Strike W/Pull-Glass Door Black
16.	372316	Glass Door, 20.925 X 9.25
17.	380041	Brace 1"" Stanley Corner
18.	969362&003012CC	Pnl-Prelam 12.13 X 2.25
19.	969362&003112CC	Panel.50X12.13 X 23.00
20.	116079	Extrusion, Corner Nosing, 12' (Sold In A 12 Ft Piece)
21.	200773	Closeout, Reading Light ABS
	365340-01	Edgebanding- .63" Frosty White
	800422	Dowel Pin 1/4X1-1/4

2021 BASECAMP
FURNITURE, LOUNGE

Dinette Seat, Roadside, 16’

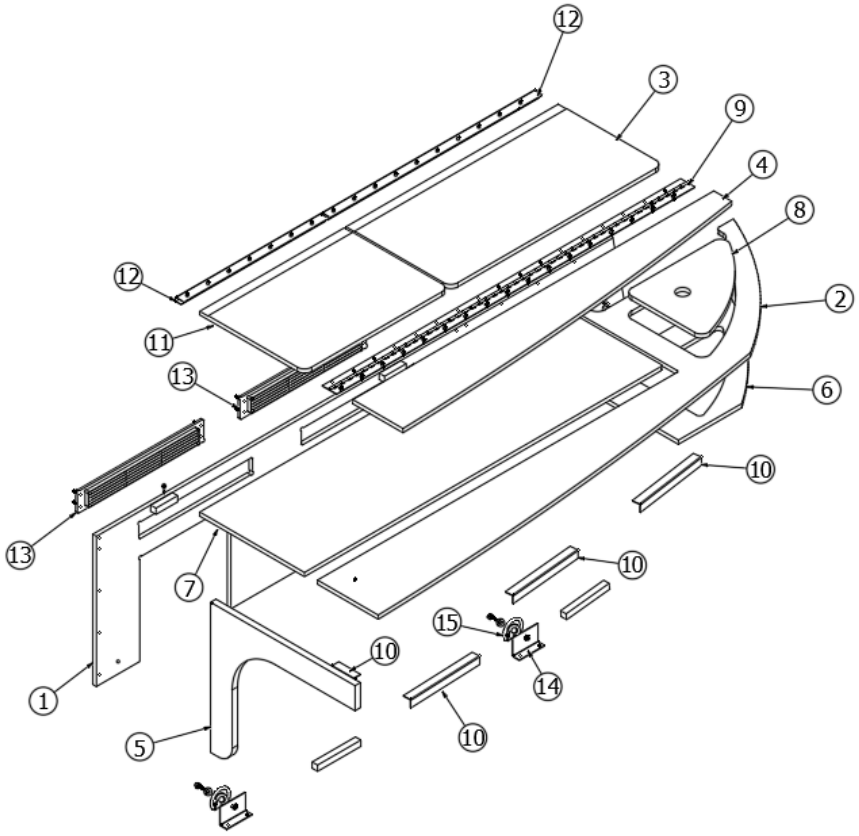

969303 Ass'y, Dinette Seat, RS

1.	969303&000112HC	Pre Laminate- 18.00 X 74.00
2.	969303&000212CC	Pre Laminate- 22.89 X 72.07
3.	969303&000312CC	Pre Laminate- 14.50 X 29.38
4.	969303&000412CC	Pre Laminate- 7.00 X 50.00
5.	969303&000518JC	Pre Laminate- 18.00 X 20.00
6.	969303&000612CC	Pre Laminate- 14.00 X 21.25
7.	969303&000712CC	Pre Laminate- 14.50 X 49.63
8.	969303&000812CC	Pre Laminate-13.25 X 10.75
9.	380203-01	Piano Hinge 1/8"" PIN CLR Anodized
10.	114812	Alum. Angle 1" X 1 "X 12"
11.	969303&001312CC	Pre Laminate- 14.50 X 20.00
12.	381847-02	Hinge-Piano Angle 52"
13.	386206	Vent-Louvered 2.63X17.5 BLK
14.	115769	Bracket - Tie Down
15.	111937-100	Cargo D-Ring
	386182	Label-"Do Not Store"
	365340-01	Edgebanding, .63”, Frosty White
	365411-02	Edgebanding, .94”, Steel Mesh

2021 BASECAMP
FURNITURE, LOUNGE

Dinette Seat, Curbside, 16’

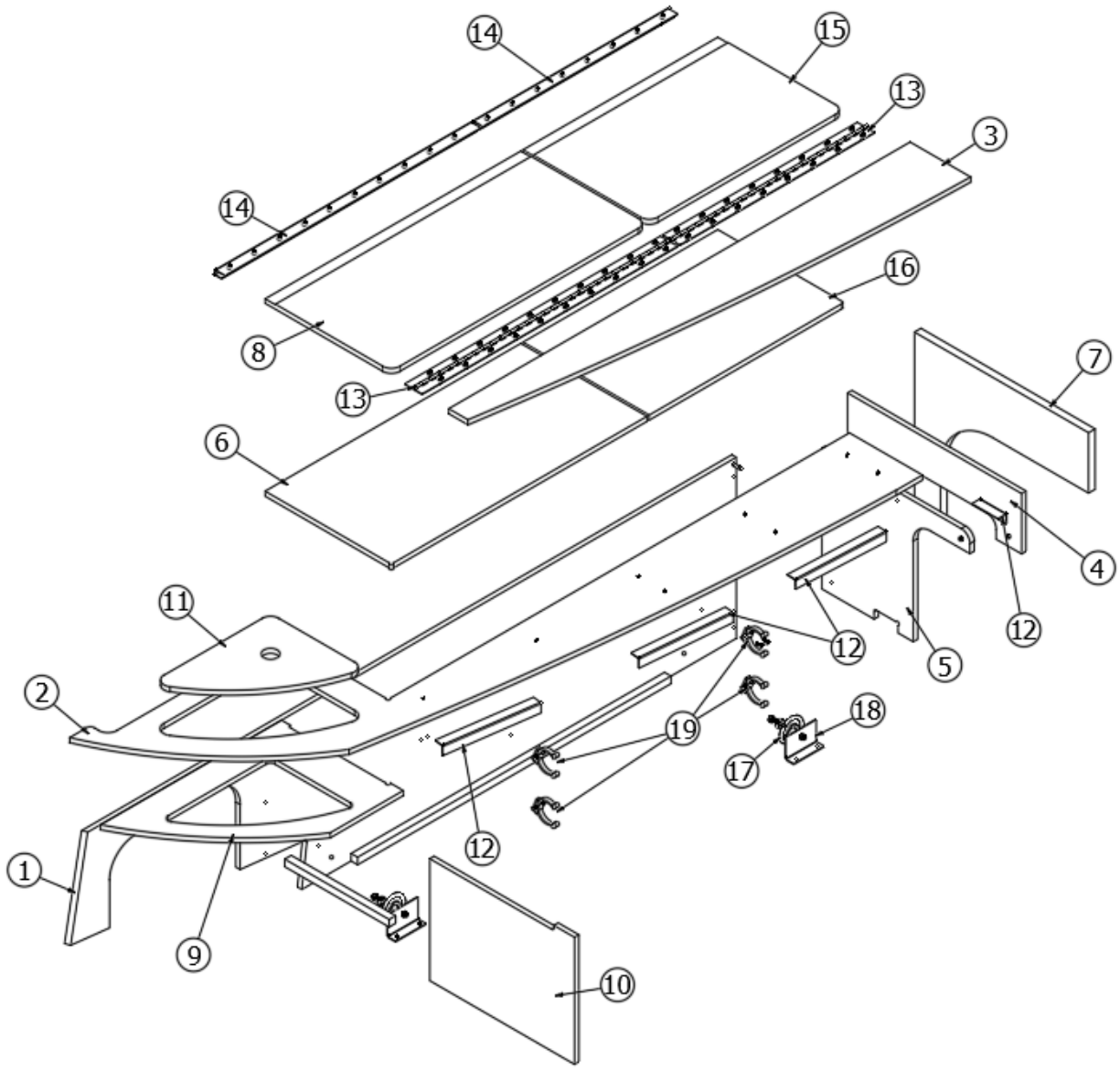

Parts Listed on Next Page

Dinette Seat, Curbside, 16’

969304 Ass'y Dinette Seat, CS

1.	969304&000112HC	Pre Laminate- .50 X 18.00 X 77.00
2.	969304&000212CC	Pre Laminate-.50 X 22.89 X 75.19
3.	969304&000312CC	Pre Laminate- .50 X 7.00 X 53.00
4.	969304&000412CC	Pre Laminate- .50 X 20.00 X 6.00
5.	969304&000512CC	Pre Laminate- .50 X 17.00 X 14.00
6.	969304&000612CC	Pre Laminate- .50 X 14.50 X 29.38
7.	969304&000718JC	Pre Laminate- 20.00 X 18.00
8.	969304&000812CC	Pre Laminate- .50 X 14.50 X 29.38
9.	969304&000912CC	Pre Laminate- 14.00 X 20.78
10.	969304&001012CC	Pre Laminate- .50 X 12.63 X 16.63
11.	969304&001112CC	Pre Laminate- .50 X 13.92 X 10.93
12.	114812	Alum. Angle 1" X 1 "X 12"
13.	380203-01	Piano Hinge 1/8"" Pin Clr Anodized
14.	381847-02	Hinge-Piano Angle 52"
15.	969304&002012CC	Pre Laminate- .50 X 14.50 X 22.38
16.	969304&002112CC	Pre Laminate- .50 X 14.50 X 22.38
17.	111937-100	Cargo D-Ring
18.	115769	Bracket - Tie Down
19.	382721	Table Post Clip
	382365	Plastic eyelet, Black
	704279	Bungee Cord 18" W/Hook - No Tongue
	203445	T-Molding Blk Flexible Poly .5
	365340-01	Edgebanding- .63" Frosty White
	365340-02	Edgebanding-.94" Frosty White

2021 BASECAMP
FURNITURE, LOUNGE

Rear Dinette Seat, RS 20’

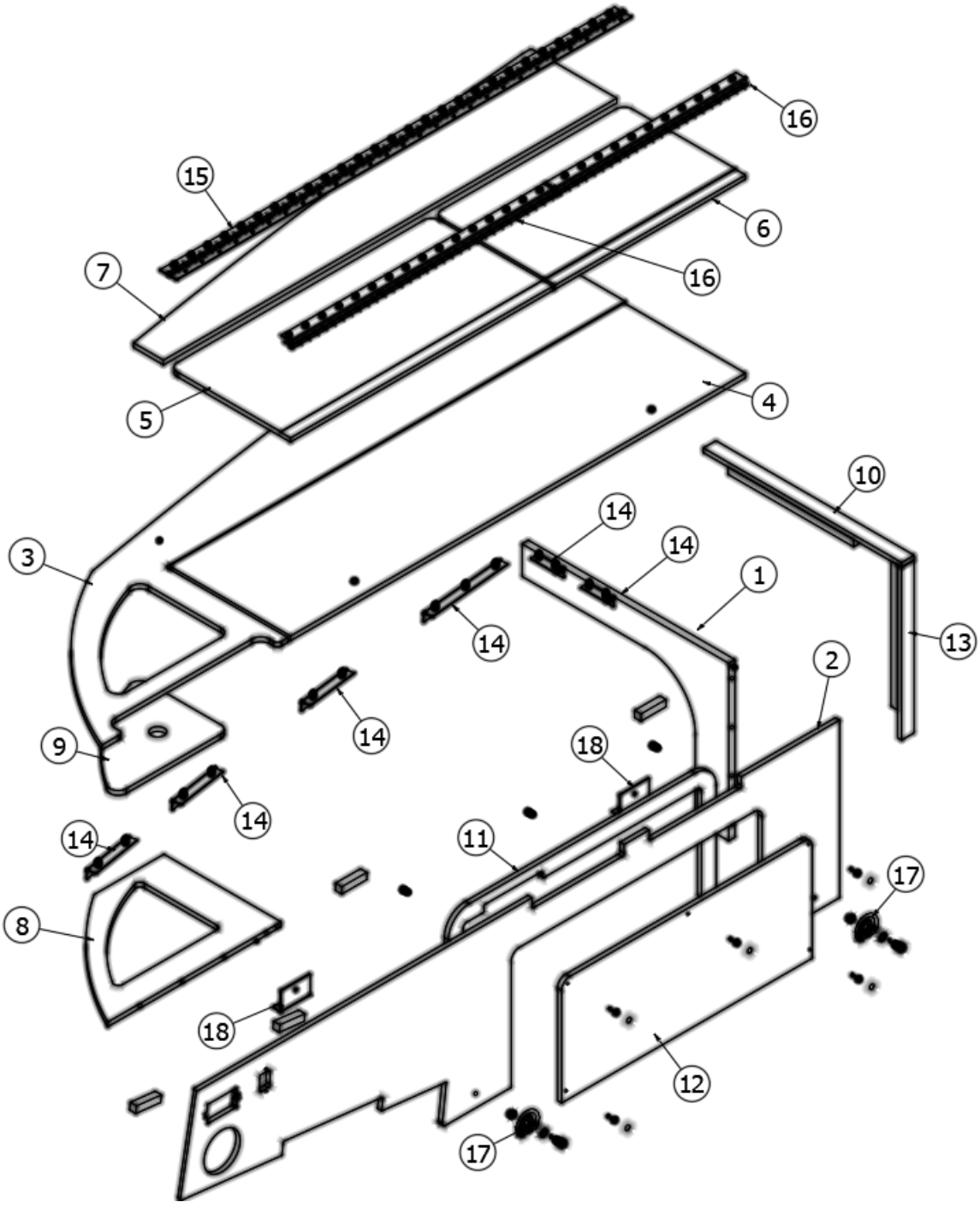

Parts Listed on Next Page

Rear Dinette Seat, RS 20’

969371 Assembly, Dinette Rear, RS

1.	969371&000118HC	Pre Laminate- 0.75 X 24.70 x 18.38
2.	969371&000212HC	Pre Laminate- 0.50 X 18.00 X 78.84
3.	969371&000312CC	Pre Laminate- 0.50 X 25.17 X 77.19
4.	969371&000412CC	Pre Laminate- 0.50 X 14.50 X 54.38
5.	969371&000512CC	Pre Laminate- 0.50 X 14.50 X 31.38
6.	969371&000612CC	Pre Laminate- 0.50 X 14.50 X 22.75
7.	969371&000712CC	Pre Laminate- 0.50 X 26.17 X 54.18
8.	969371&000812CC	Pre Laminate- 0.50 X 14.00 X 21.00
9.	969371&000912CC	Pre Laminate- 0.50 X 10.94 X 13.94
10.	969371&004312CC	Prelam .50 X 2.25 X 23.69
11.	969371&003312CC	Pnl-Prelam .50X32X13.25
12.	969371&003412HC	Pnl-Prelam .50X12.59X29.94
13.	969371&004212HC	Prelam .50 X 2.25 X 17.50
14.	114812	Alum. Angle 1" X 1 "X 12"
15.	380203-04	Piano Hinge 1/8"" Pin Clr Anodized
16.	381847-04	Hinge-Piano Angle 52"
17.	111937-100	Loop-Tie Down Sgl.Bolt Bracket
18.	115769	Bracket - Tie Down
19.	365013-01	Tape, Foam Charcoal - Screen Door (27 Ft. Per Roll)
	800422	Dowel Pin 1/4X1-1/4
	365340-01	Edgebanding- .63" Frosty White
	365340-02	Edgebanding-.94" Frosty White
	386206	Vent-Louvered 2.63X17.5

Rear Dinette Seat, CS 20’

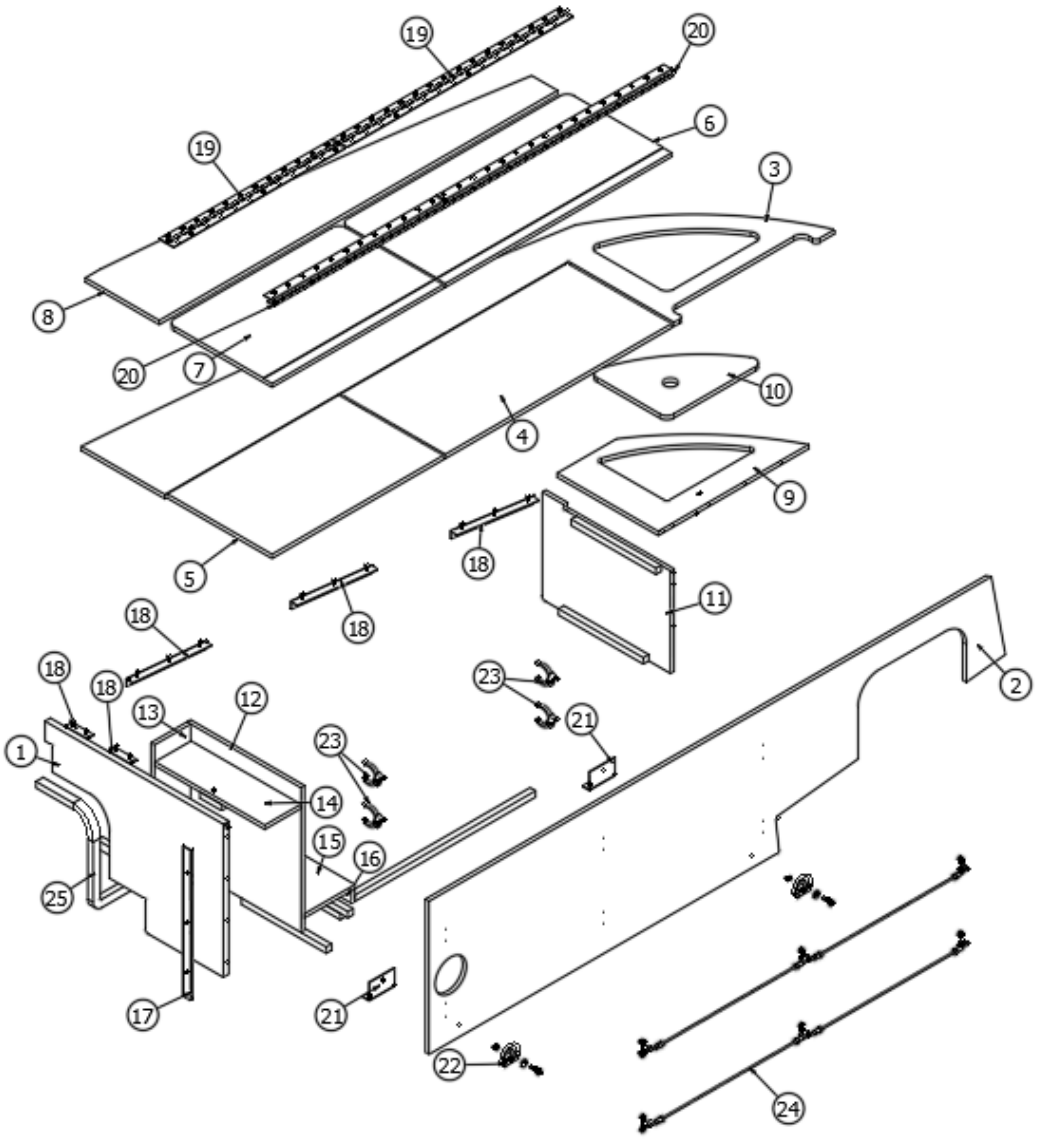

Parts Listed on Next Page

Rear Dinette Seat, CS 20’

969370 Assembly, Dinette Rear, CS

1.	969370&000118HC	Pre Laminate- 0.75 X 24.70X 18.38
2.	969370&000212HC	Pre Laminate- 0.50 X 18.00 X 79.84
3.	969370&000312CC	Pre Laminate- 0.50 X 26.17X 78.19
4.	969370&000412CC	Pre Laminate- 0.50 X 14.50 X 31.38
5.	969370&000512CC	Pre Laminate- 0.50 X 14.50 X 23.75
6.	969370&000612CC	Pre Laminate- 0.50 X 14.50 X 31.38
7.	969370&000712CC	Pre Laminate- 0.50 X 14.50 X 23.75
8.	969370&000812CC	Pre Laminate- 0.50 X 26.17 X 55.18
9.	969370&000912CC	Pre Laminate- 0.50 X 14.00 X 21.00
10.	969370&001012CC	Pre Laminate- 0.50 X 10.94 X 13.94
11.	969370&001112CC	Pre Laminate- 0.50 X 12.50 X 17.75
12.	969370&003912CC	Pnl-Prelam .50X17.00 X 15.13
13.	969370&004012CC	Pnl-Prelam .50X17.00X5.00
14.	969370&004112CC	Pnl-Prelam .50X14.56X5.00
15.	969370&004312CC	Pnl-Prelam .50X23.00X7.00
16.	969370&004412CC	Pnl-Prelam .50X23.00 X 1.50
17.	116076	Aluminum Face Nosing, 12' X 1
18.	114812	Alum. Angle 1" X 1 "X 12"
19.	380203-04	Piano Hinge Clr Anodized 56"
20.	381847-04	Hinge-Piano Angle 56"
21.	115769	Bracket - Tie Down
22.	111937-100	Loop-Tie Down Sgl.Bolt Bracket
23.	382721	Table Post Clip
24.	704279	Bungee Cord 18" W/Hook - No Tongue
25.	360417	Seal-Gasket W/Adhesive Back
	382365	Plastic eyelet, Black
	800422	Dowel Pin 1/4X1-1/4
	381610-01	Cover Cap Plas. European White
	365013-01	Tape, Foam Charcoal - Screen Door (27 Ft. Per Roll)
	365340-01	Edgebanding- .63" Frosty White
	365340-02	Edgebanding-.94" Frosty White
	203445	T-Molding Blk Flexible Poly .56"

2021 BASECAMP
FURNITURE, LOUNGE

Front Dinette Seat, 20’

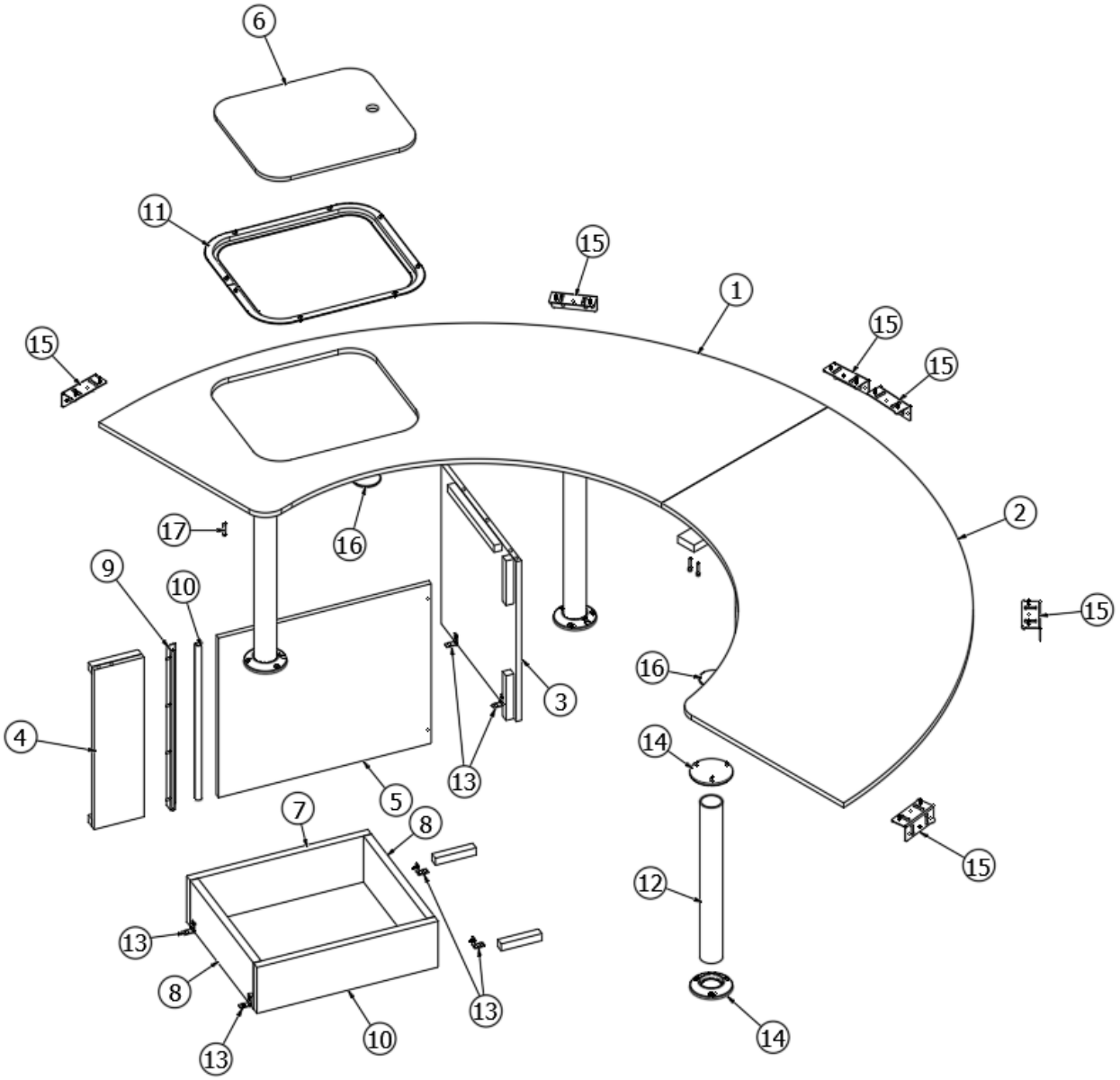

Parts Listed on Next Page

Front Dinette Seat, 20’

969374 Assembly-Front Dinette

1.	969374&000112CC	Pre Laminate- 0.50 X 48.00 X 48.00
2.	969374&000212CC	Pre Laminate- 0.50 X 48.00 X 48.00
3.	969374&000312HC	Pre Laminate- 0.50 X 16.13 X 17.00
4.	969374&000412HC	Pre Laminate- 0.50 X 4.75 X 17.00
5.	969374&000512HC	Pre Laminate- 0.50 X 20.24 X 17.00
6.	969374-6	Lauan – 0.38 x 15.00 x 13.00
7.	969374&001018CC	Pre Laminate- 0.75 X 4.90 X 17.25
8.	969374&001118CC	Pre Laminate- 0.75 X 4.90 X 13.60
9.	0106-0015	Extr.5516 95"" Eyebrow Trl Door
10.	365458	Rubber Seal, W/PSA 5/8 X 3/8
11.	115812	Trim Ring-Dinette Seat
12.	116243	Pole, Seat 2" Tubing
13.	380041	Brace 1"" Stanley Corner
14.	116242	2" Socket
15.	455309-05	Bracket-Furniture Mount
16.	116266	Bracket, Table Stop
17.	800422	Dowel Pin 1/4X1-1/4
	365411-01	Edgebanding 1MM Steel Mesh 5/8"
	365395-01	Edgebanding 1MM 5/8" Crisp Linen
	203138-06	Wall Extrusion-Plas Ash Grey
	704787	Velcro Loop Black 2.0" Wide-Adhesive Back

2021 BASECAMP
FURNITURE, LOUNGE

Dinette Tables, 16’

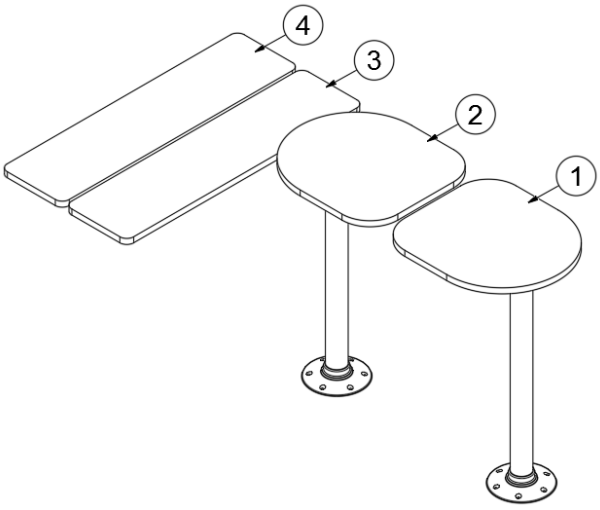

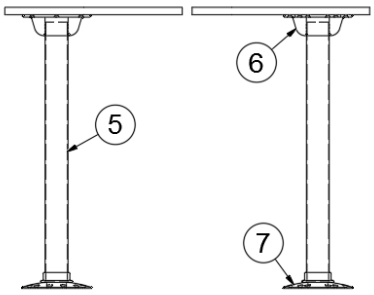

	968455-32	Dinette Table, Crisp Linen
	968455-33	Dinette Table, Citadel
1.	968455&000118JC	Panel-16.00X18.00
2.	968455&000218JC	Panel-16.00X18.00
3.	968455&000318JC	Panel-34.00X8.88
4.	968455&000418JC	Panel-34.00X8.88
5.	382722-02	Table Leg 29.88
	382722-01	Table Leg 17.38
6.	382724	Table Base - Pedestal Leg
7.	382723	Floor Base-Pedestal Leg
	203941-01	Molding-5 7/8" Putty Gray (Crisp Linen)
	203942-01	Molding-T 13/16 Storm Gray (Steel Mesh)
	365464-02	Edgebanding 2MM-15/16" Crisp Linen
	365465-02	Edgebanding 2MM - 15/16" Steel Mesh

Dinette Table Storage

704270	Kit, Dinette tabletop storage
382365	Plastic eyelets, Black
704279	Bungee w/hook, No tongue, 22”

Front Dinette Table, 20’

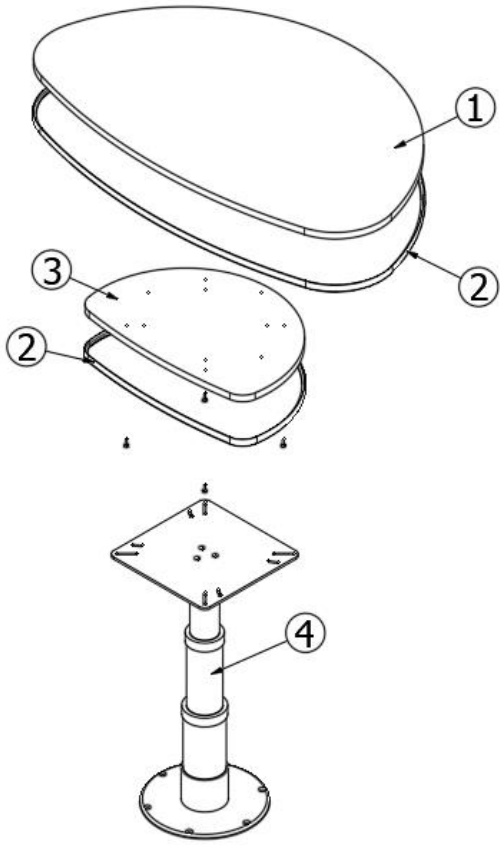

969379 Assembly, Dinette Table, Front

1.	969379-1	44 X 26.18 Table Top W/T- Mold
2.	203942-01	Molding-T 13/16 Storm Gray (Steel Mesh)
	203941-01	Molding-7/8" Putty Gray (Crisp Linen)
3.	969379&000518CC	Panel 75 X 22.00 X 15.13
4.	382073-01	Bracket-Pedestal Table

Rear Dinette Tables, 20’

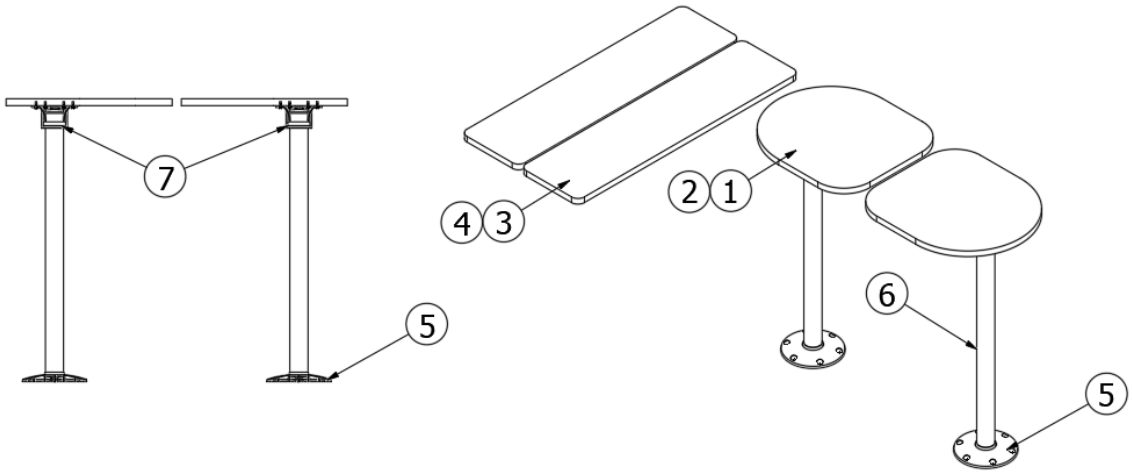

969380 Assembly, Dinette Table / U-Panels, Rear

1.	969380&000118JC	Pre Laminate- 0.75 X 16.00 X 18.00
2.	365395-02	Edgebanding-.94" Crisp Linen
	365411-02	Edgebanding-15/16" 1MM Steel Mesh
3.	969380&000218JC	Pre Laminate- 0.75 X 8.88 X 34.00
4.	203941-01	Molding-7/8" Putty Gray (Crisp Linen)
	203942-01	Molding-T 13/16 Storm Gray (Steel Mesh)
5.	382723	Floor Base-Pedestal Leg
6.	382722-02	Table Leg 29.88"
7.	382724	Table Base - Pedestal Leg
	382722-01	Table Leg 17.38"

2021 BASECAMP
HARDWARE

Main Door Latch with Deadbolt

382311	Main door latch w/deadbolt, Black
382311-01	Interior handle w/deadbolt, Black
382311-02	Door edge cover plate
382311-03	Handle mounting screws
382311-04	Door edge mounting screws
455371	Pocket strike, Main door

Rear Door Latch and Lock

382312	Cargo door latch
382312-01	Plunger Bolt
382312-03	Non-locking L-handle
115783	Rear door latch plate
381423-04	Strike plate
382327	Clamp, Actuator cable
382416	Rope, 316 SS wire, 1/16” Dia.

Interior Hinges

382238	Hinge, Compact blum, Steel Plated Nickel
381847-02	Piano hinge angle
380203-03	Piano hinge, Anodized
382306	Hinge, Glass door pivot set
381654	Hinge, Glass door, Black
382731	Hinge-Cont.-Clear Anodized 57"

Exterior Hinges

382371	Hinge, Rear window
382065	Hinge, Rear door
380203-01	Piano hinge, 1/8 pin, Clear anodized
380203-02	Piano hinge, 1/8 pin, Black anodized
382451	Piano hinge, Painted at top
380988	Hinge, Continuous
115933	Hinge, LP lid, 24”
382655	Hinge-Friction

2021 BASECAMP
HARDWARE

Exterior Latches and Handles

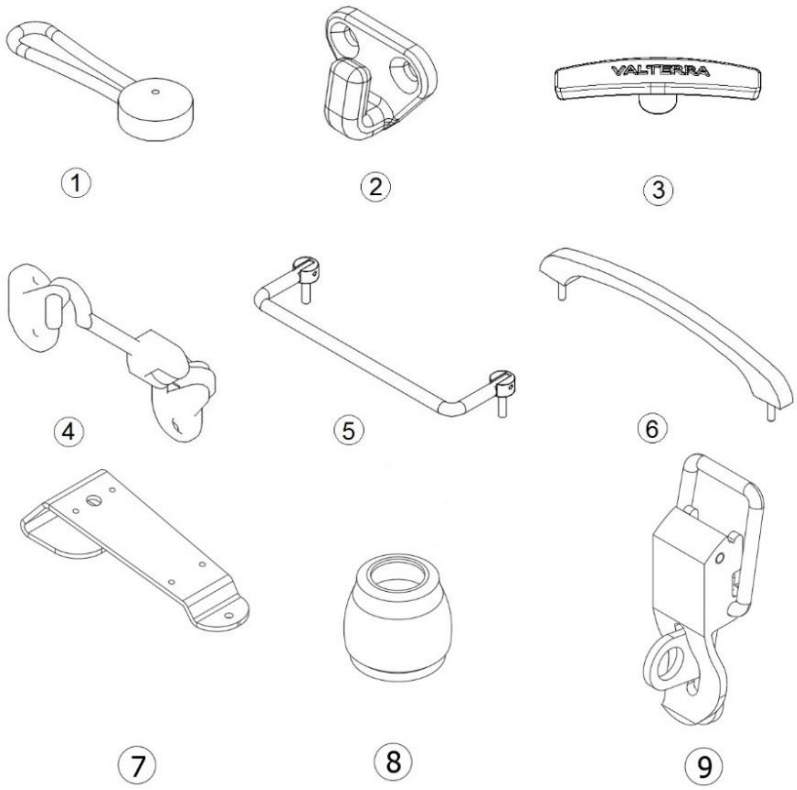

1.	99900P-1001	Shock cord clip, Black
2.	99900P-1002	Shock cord hook, Black
3.	601607-17	Handle, Dump valve, Black
4.	386314	Main door stay
5.	386318	Folding Handle
6.	101171-01	Grab handle, Main door, Black
7.	116003-01	Door Latch Bracket
8.	382624	Rubber Bumper
9.	340023-01	Catch and strike, Zinc
	382689	Gasket - Door Stay

Interior Latches and Handles

381707	Strike w/pull, Glass door, Black
382311-01	Interior handle w/deadbolt, Black
382312-03	Non-locking L-handle
382415	Tapered Handle
381653	Latch, Single touch, Black
382388	Latch, Rear window
455175-01	Bracket, CS window latch
455175-02	Bracket, RS window latch
382239	Latch, Shower door
381737-02	Handle, Assist, Molded, Black

2021 BASECAMP
HARDWARE

Head knocker

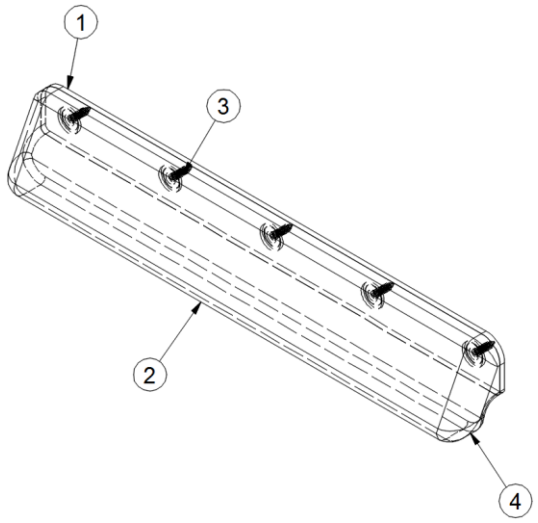

998234	Head Knocker

1.	802149	Head knocker backer board
2.	704326	Head knocker foam
3.	382062	Fastener, Finned
4.	704322	Sunbrella sail cloth shade

Bathroom Accessories

602284	Towel bar, 18”, Polished Stainless Steel
381834	Hook, Aluminum
602175	Holder, Dryroll toilet roll, White
704272	Shower caddy
371455	Mirror, Exterior of bath door
371456	Mirror, Interior of bath door

Shower Curtain

101225	Extr. Alum Curtain Track Attach (Sold In A 10.5 Ft Piece)
101217	Extrusion Curtain Track
200784	Ends,Curtain Track,RH White
200785	Ends,Curtain Track LH White
320078	Screw, 8 X 3-8
704679	Shower Curtain-Basecamp
703467-03	Shower Curtain Strap

Clothesline

382063	Clothesline, Retractable

2021 BASECAMP
HARDWARE

Rivets

325000-01	Rivet, 1/8”, 1/4” length anodized Clear
325004-01	Rivet, 1/8”, length .5”, anodized Clear
330139-01	Rivet, Magnalok, ¼”, SS
330152	Rivet, 1/8” Aluminum w/Steel Mandrel
330038	Rivet, Blind AD 54 ABS-LF
330034	Rivet, Pop AD68
330126-03	Rivet, Pop, SSD44SSBS
330127-02	Rivet, 1/8, AD42ABS
330127-04	Rivet, 1/8, AD44ABS
330127-05	Rivet, 1/8, AD45ABS
330151	Rivet- 5/32" Multi Grip Blind

Screws

320192	Screw, 18-8, .75”, Keder rail install
345558	Screw, #8-32 x .5, PH, Black, Windows
345073-08	Screw, .25-20 x 1.375, Phil, Wafer HD, Floor
320159	Screw, M6 x 45mm, Self-drilling w/wings, Floor
320029-01	Screw, #8 x .5 PPH, Type A, SS, Tail light install
300176	Screw, 8/32 x .75, FH PH, SS, Tail light install

Detectors and Fire Extinguishers

510781	Smoke detector
512539-01	LP detector, 12V
600162-01	Fire extinguisher
600162-02	Fire extinguisher, CSA
512783	Detector, Carbon Monoxide (BRK)
513796	Detector-LP-CO2

Labels and Tags

385560	Label, Air Conditioner Rating
385020	Sticker, Self-Adhering, Jack
386298	Label, Microwave Circuit Rating
386019	Label, 1 amp fuse max
386250	Label, LPG Service Port
386182	Label, "Do Not Store"
386114	Label, RVIA Silver
386120	Label, Smoke Alarm Warning
386252	Label, Hepvo Waterless Trap
365477	Decal - Black Tank Flush
365478	Decal-City Water Inlet
386118	Label LP Gas Tri-Warning

2021 BASECAMP
PLUMBING, LPG SYSTEM

LP Tank and Regulator

601781	LP tank, 20#, Steel
602332-09	Cavanaugh gas regulator w/two 11” pigtails
602332-02	Black pan
602332-05	LP hose, 48”
602332-06	Hold down, Regulator
602332-07	Z-bracket for regulator
381613	Cover, LP wing handle
602109-03	LP dust plug port

LP Tank Cover

112332	Kit, Complete LP cover
203860	LP lid
203861	LP tray
203856	LP shroud body
115766	Z-clip, Extrusion
99900P-1002	Shock cord hook, Black
99900P-1001	Shock cord clip, Black
115809	LP logo wrap
386255-01	Airstream curved lettering
115867	LP lid hinge stiffener
382655	Hinge-Friction
386118	Label LP Gas Tri-Warning
455842	Hold down VTD0046

2021 BASECAMP
PLUMBING, LPG SYSTEM

LPG System, 16’

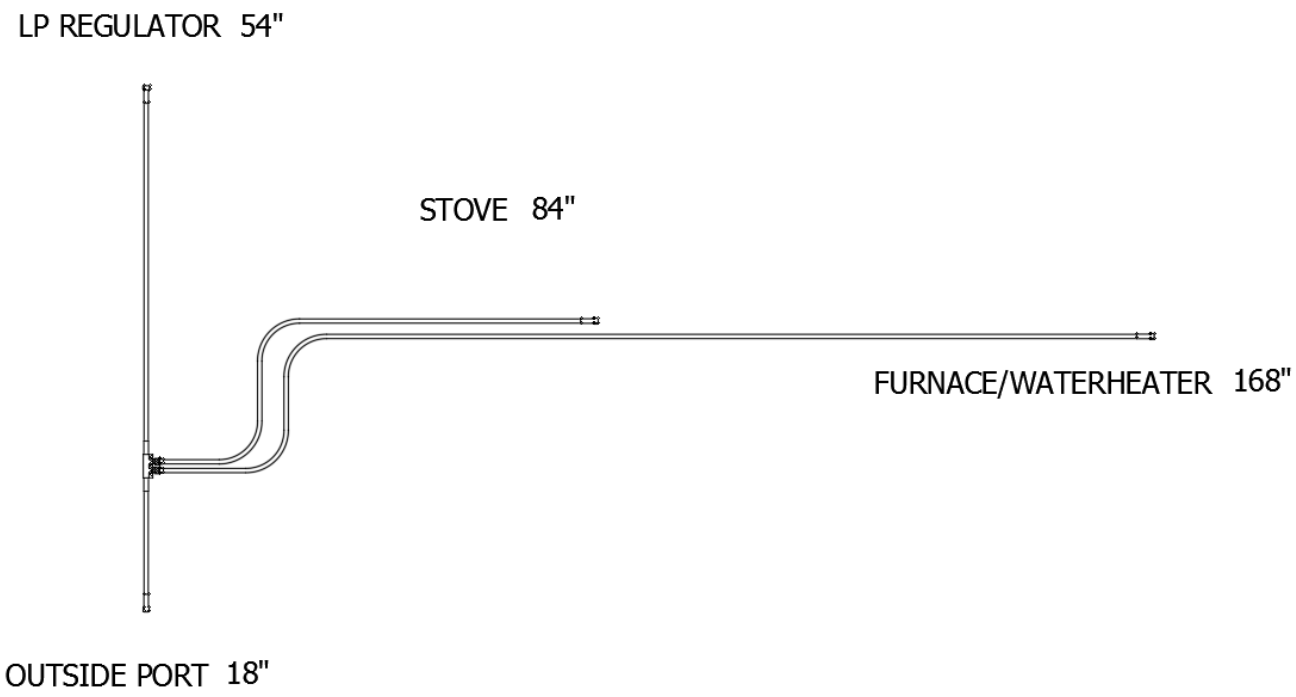

943892-01	LPG System Layout
943892	LP flex hose
382556	LP closeout
601781	LP tank, 20#, Steel
602332-09	Cavanaugh gas regulator w/two 11” pigtails
345181	Screw, ¼-14 x 2”, Self tapping
381332-16	Star washer

2021 BASECAMP
PLUMBING, LPG SYSTEM

LPG System, 20’

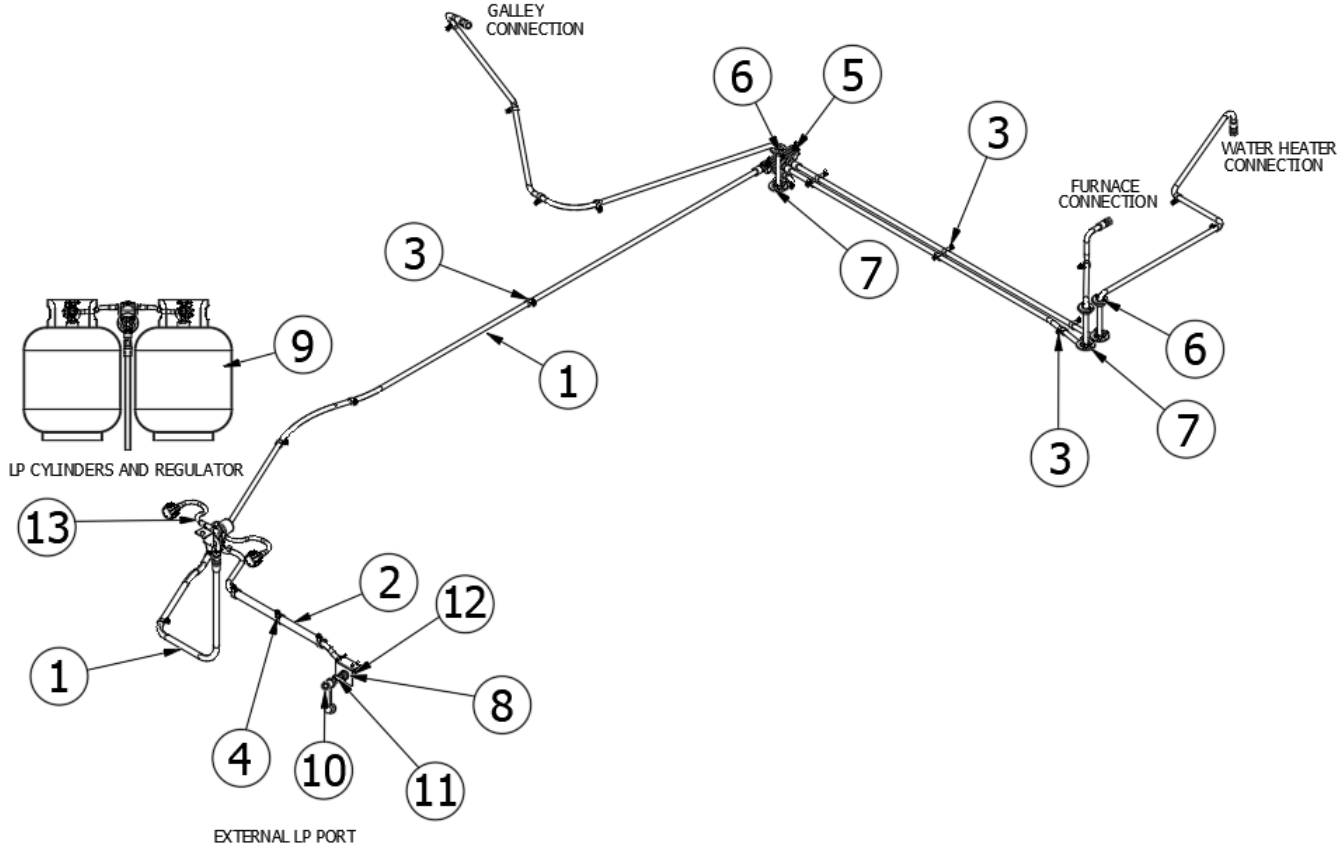

1.	943942	LP Flex Line Assy BC 20
2.	201267-11	Conduit Convoluted W/S 1" Black
3.	340085-06	Clamp, Loop, Steel W/Rubber,.75 DIA
4.	340085-07	Clamp-Loop W/Rub.1"
5.	350158-01	Washer, Lock Tooth(INT-EXT)-1/4
6.	382500	Grommet- .5" Pipe Press Fit Sealing
7.	382556	Closeout- 2.38"D LP Assy BC
8.	454901	Bracket-LP Quick Disconnect Port
9.	601781	LP Tank-20lb Steel
10.	602109-01	Coupler-Disconnect.25"FPT X QD
11.	602286	Nipple-.5"MPT X .25" MPT Brass
12.	602313	Fitting MPT X 1/2" FLR 90 DEG
13.	602332-09	Regulator-Gas W/2 Pigtails 11"
	512412	Bushing-Snap IN .75"ID

2021 BASECAMP
PLUMBING, LPG SYSTEM

Propane Port, Exterior

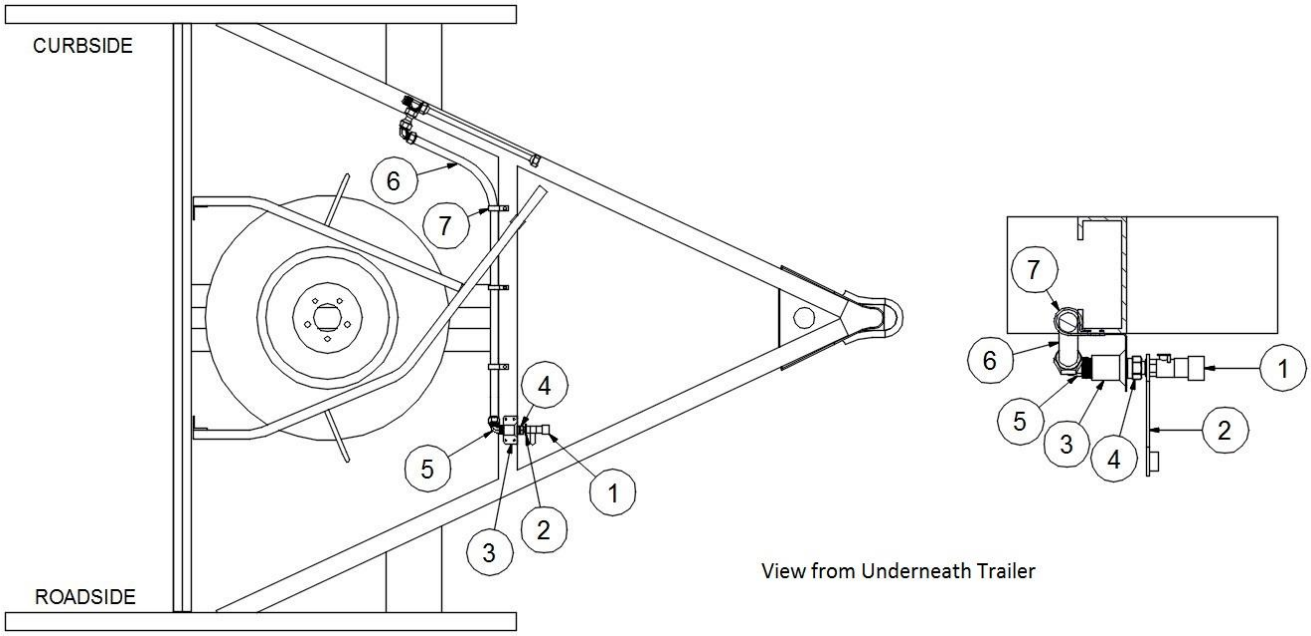

	112008	Exterior Propane Port
1.	602109-01	Coupler, Quick disconnect
2.	602109-03	Dust plug
3.	454901	Bracket, LP quick disconnect port
4.	602286	Nipple, .5” MNPT x ¼” MNPT
5.	602313	Fitting, .5” MPT x .5” FLR, 90°
6.	602315	LP Hose, .5” FLR SWV, 36”
7.	340085-07	Clamp, Loop, Steel w/rub, 1”
	201267-11	Conduit, Convoluted, 1”
	386250	Label, LPG Service Port

2021 BASECAMP
PLUMBING, FRESH WATER SYSTEM

Faucet, Galley

602197	Sink w/faucet, SMEV
601813	Lift & turn drain

Faucet, Shower

601358	Shower hand unit, Chrome
604877-01	Shower valve

City Water Hook-Up

601392-06	City water fill, 50 PSI, Chrome
601392-01	Plastic screw-in cap
601392-02	Strap

Fresh Water Tank Fill

601194	Water fill w/lock, Gray
601194-02	Cap, cable, & spout
601239-01	Tubing, 1.375” ID, Flexible, Water fill hose

Water Pump

602307	Shurflo water pump, 3 GPM
601668-01	Strainer, Water pump

Fresh Water Tank

602538	Fresh water tank, 16’
455052	Tank pan, Fresh water, 16’
602785-2	Tank-Fresh Water, 20’
455709	Tank Pan - Fresh Water, 20’
601243	Drain cock
340301	Worm clamp, Dual bead
200152	Styrofoam, .5 x 6 x 42
200507	Styrofoam, 1 x 25 x 55
511780	Tank heating pad
602185-01	Drain valve, 90°

2021 BASECAMP
PLUMBING, FRESH WATER SYSTEM

Fresh Water Fittings

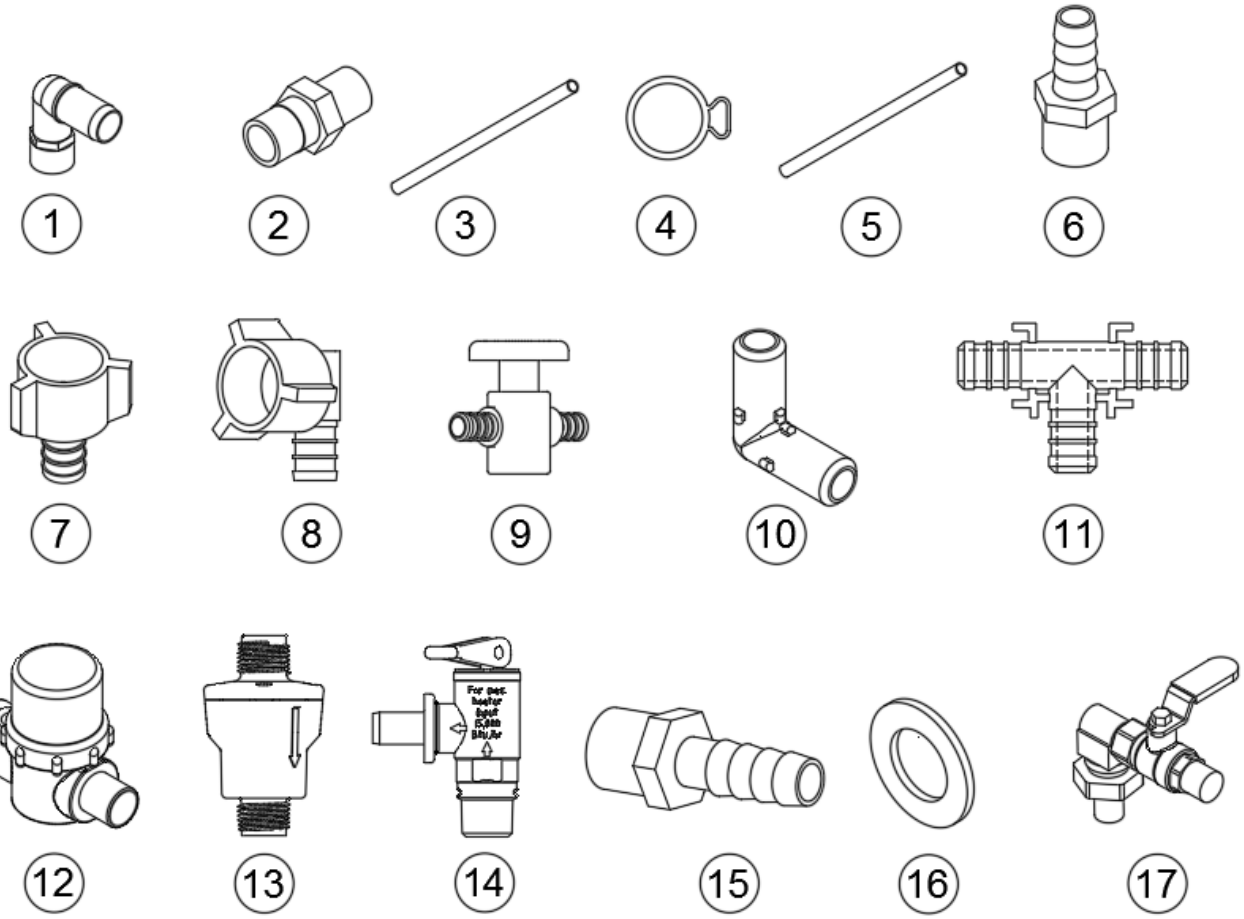

1.	601237	Elbow, 90°, 1.25” MPT x 1.25” Bar
2.	602308	Valve-Check .5"MPT X .5"MPT Brass
3.	601698-01	E-Pex tube, .5”
4.	601698-15	Crimp ring, .5” E-Pex, .5”, Black
5.	601698-21	E-Pex tube, .5”, Red
6.	602256-02	Coupler, .5” barb x .5” MPT
7.	602256-03	Coupler, .5” barb x .5” FPT
8.	602256-05	Elbow, .5” barb x .5” FPT
9.	602256-22	Valve, .5” barb x .5” barb straight, Black Pex
10.	602256-10	Elbow, .5” barb x .5” barb
11.	602256-11	Tee, .5” x .5” x .5”
12.	601668-01	Strainer-Fresh Water Pump
13.	690704-19	Regulator-Water Pressure
14.	690704-20	Pressure Relief VLV W/Drain VLV Combination
15.	601004	Coupling, .5” barb x 3/8” MPT
16.	300124	Zinc washer
17.	602185-01	Drain valve, 90°

2021 BASECAMP
PLUMBING, FRESH WATER SYSTEM

Fresh Water Lines, 16’

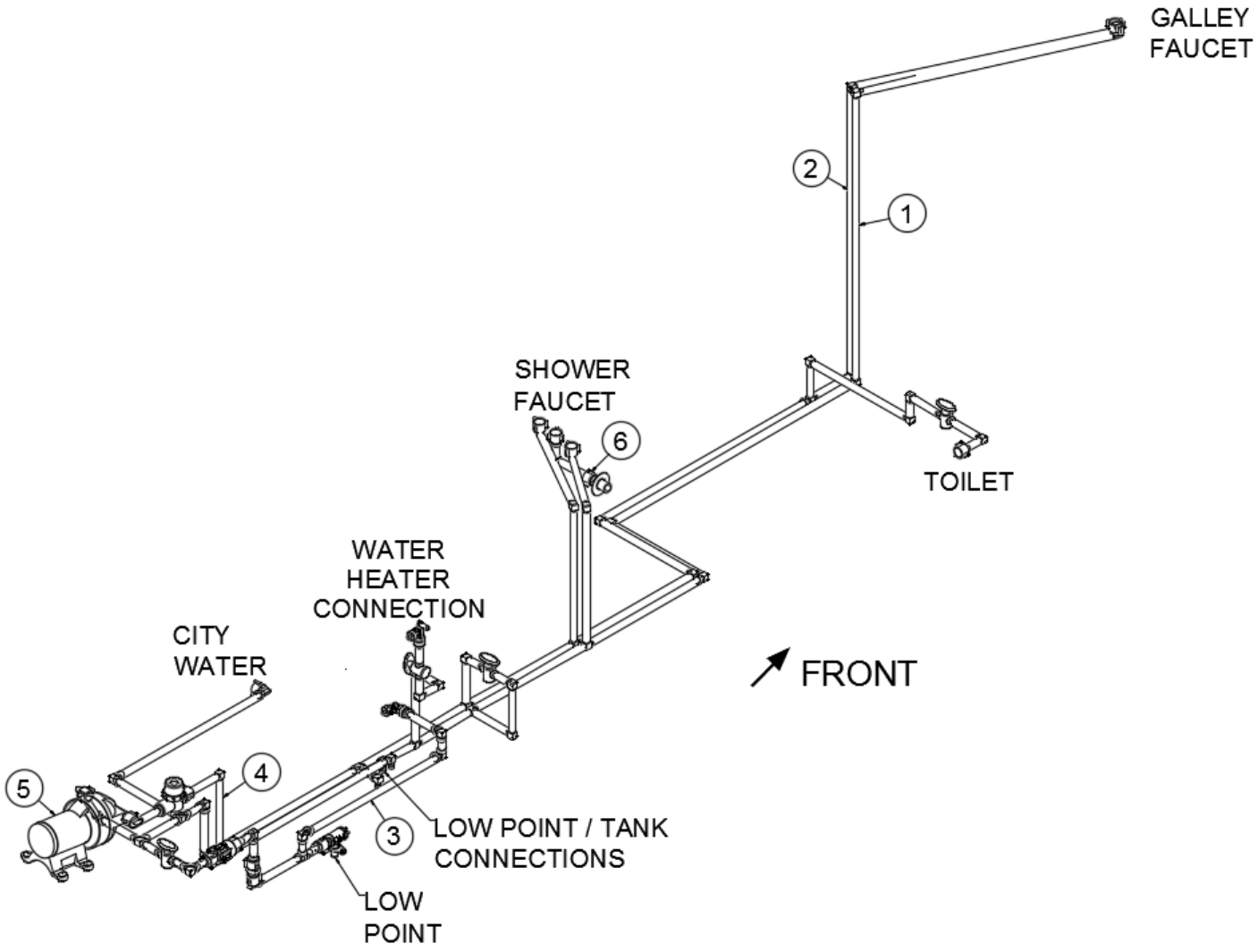

943812	Fresh Water Layout

1. 943812-1	RS hot
2. 943812-2	RS forward cold
3. 943812-7	RS aft cold
4. 943812-4	Pump feed
5. 943812-5	Shower valve
6. 943812-6	Truma Bypass

2021 BASECAMP
PLUMBING, FRESH WATER SYSTEM

Fresh Water Lines, 20’

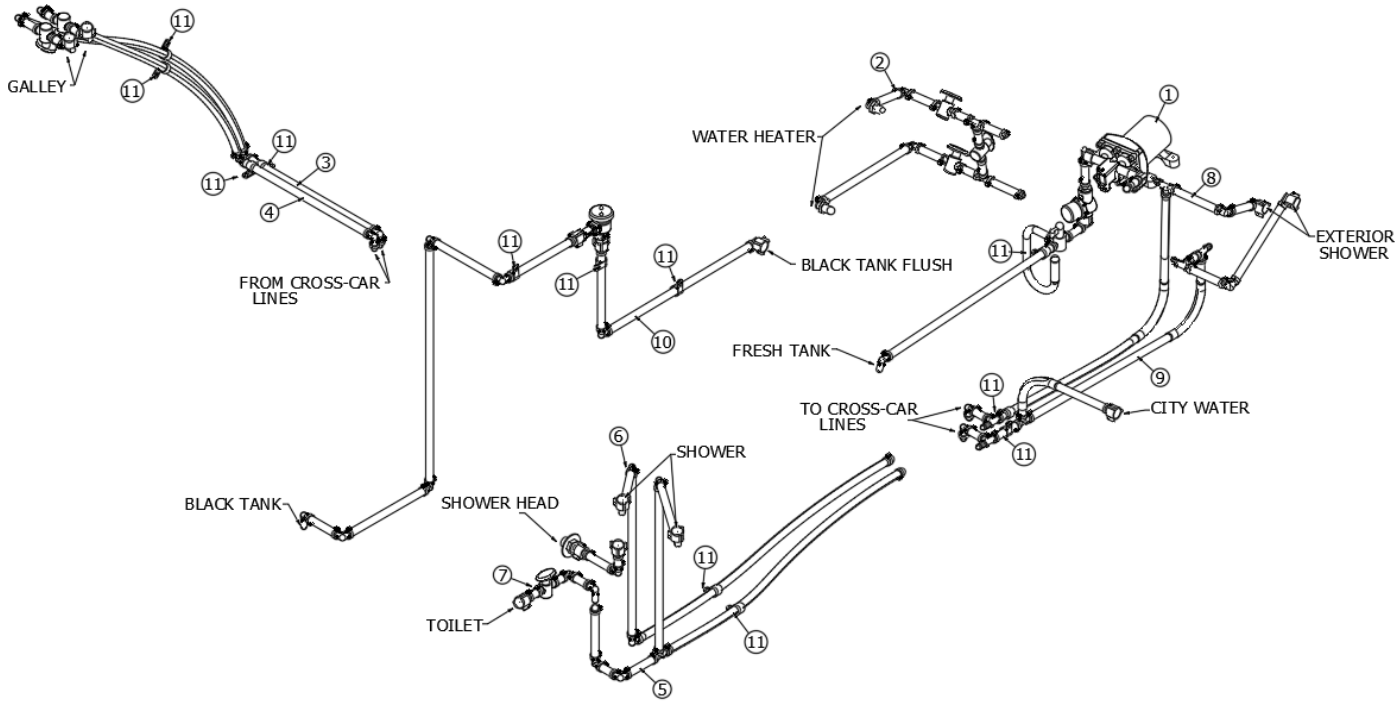

1.	943936-1	Layout-Fresh Water Pump BC20
2.	943936-2	Layout-Water Heater Bypass BC2
3.	943936-3	Layout-Galley Hot BC 20
4.	943936-4	Layout-Galley Cold BC 20
5.	943936-5	Layout-Wet Bath - Cold BC 20
6.	943936-6	Layout-Wet Bath - Hot BC 20
7.	943936-7	Layout-Toilet Supply BC 20
8.	943936-8	Layout-Supply Hot BC 20
9.	943936-9	Layout-Supply - Cold BC 20
10.	943936-10	Layout-Black Tank Flush
11.	340085-06	Clamp, Loop,Steel W/Rubber,.75 Dia
12.	601698-15	1/2 Crimp Ring #14785

2021 BASECAMP
PLUMBING, FRESH WATER SYSTEM

Winterization Kit

112814 Winterization Kit Installation

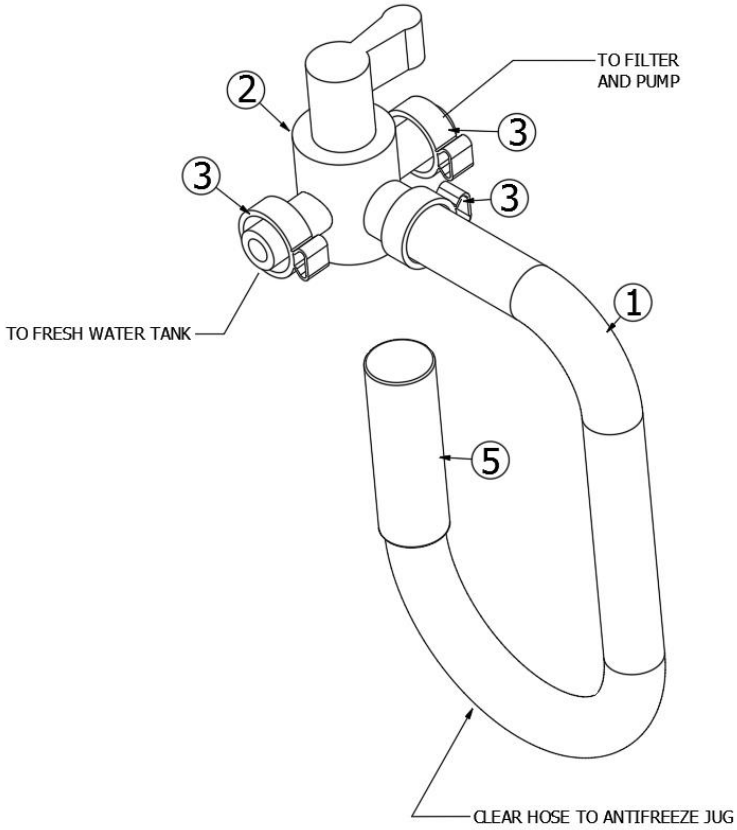

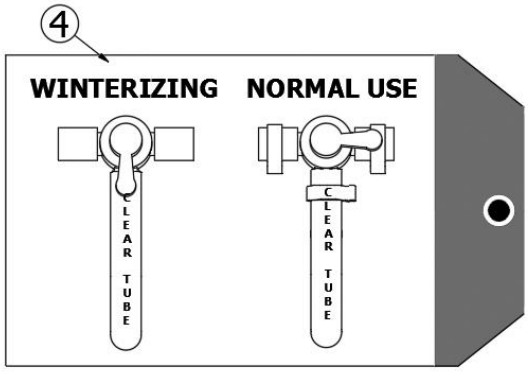

1.	601240-01	Tubing 1/2 I.D. X 3/32 Wall Thick
2.	602711	Valve-3 Way Bypass .5" PEX #32788
3.	601698-15	1/2 CRIMP RING #14785
4.	365453	Tag-Instruction - Winterization Kit
5.	602801	Cap, 5/8” ID, Winterization Kit

2021 BASECAMP
PLUMBING, DRAIN SYSTEM

Sink and Shower

602197	Galley sink w/faucet, SMEV
601813	Tail piece, Lift and turn drain
203829	Shower pan
600594-02	Shower drain w/Black strainer

Black and Grey Tank, 16’

601607-07	Termination Cap - 3" Bay
600820	3"Single Socket 90degree
601607-06	Term. Adaptor - 3"" HUB X 3"" Bay
601607-14	Valve Assy-3"Spig X 3"Spig #T40A
455707	Ass'y - Grey Tank Pan
511780	Pad-Tank Heating 6.5"X 18" CNTH618A
602431	Tank - Black/Grey Combo
200507	Styrofoam, 1” x 25” x 55”, Water Tight
513168	Monitor, Tank system kit (Seelevel)
116226	Access Panel- Black/Grey Tank Large

Black and Grey Tank, 20’

455711	Tank Pan - Grey Water BC 20
511780	Pad-Tank Heating 6.5"X 18"
512566-02	Sender Pad Seelevel
602446	Tank-Grey Water BC 20
455508	Tank Pan – Black Water
602447	Tank-Black Water BC 20

Black Tank Flush

601441-02	Black tank flush
601392-01	Plastic screw in cap
365477	Decal - Black Tank Flush

2021 BASECAMP
PLUMBING, DRAIN SYSTEM

Drain System, 16’

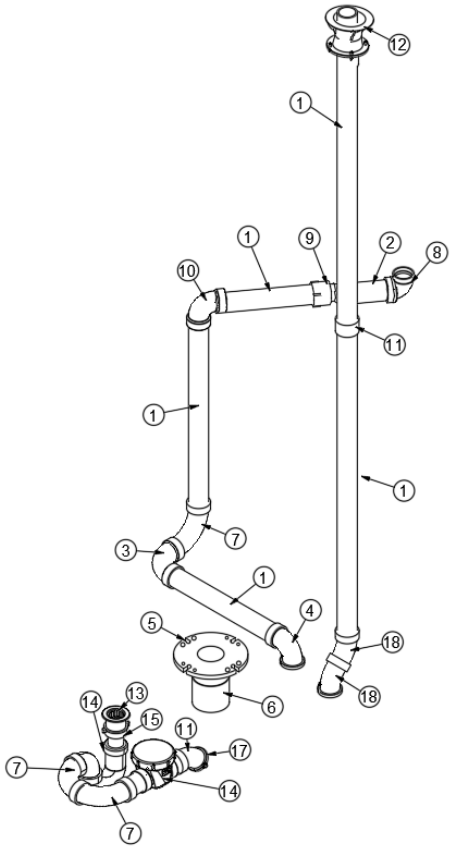

943933 Layout, Drainage System

1.	601160-02	ABS Pipe, 1.5IN.
2.	690603-01	Valve-Waste #92010
3.	600035	Elbow, 1.5 IN. XLT 90 Degree
4.	600662	1 1/2"" Elbow, Short Radius
5.	601266	Flange, Closet, 3IN HUB X 4IN HORN HUB, Slip Fitting
6.	601267-04	Nipple 3"" DIA. THD ONE 10"" LG
7.	600431	ST. Elbow, 1.5IN. XLT 90 Degree
8.	690603-02	Adapter-Angle #92000
9.	600308	Adapter ABS Female Sloan #2891
10.	601636	Elbow 1-1/2"" 90DEG
11.	600227	Coupling,1.5 IN. Plastic
12.	690700-01	Cap-Tank Vent White #54062
	690700-02	Cap-Tank Vent Black #640G2
13.	195362-39	2"" Strainer ,Model # 7466JR
14.	602720	Valve-Sanitary Check 1.5" ABS
15.	602164-01	P Trap W/Compression Nut 1.5"
16.	602164-02	Tailpiece W/Nuts & Washers 1.5
17.	340084-28	Clamp, Hose - Size 2-1/4IN
18.	600027	Elbow ABS Long ST 45 Degrees

2021 BASECAMP
PLUMBING, DRAIN SYSTEM

Drain System, 20’

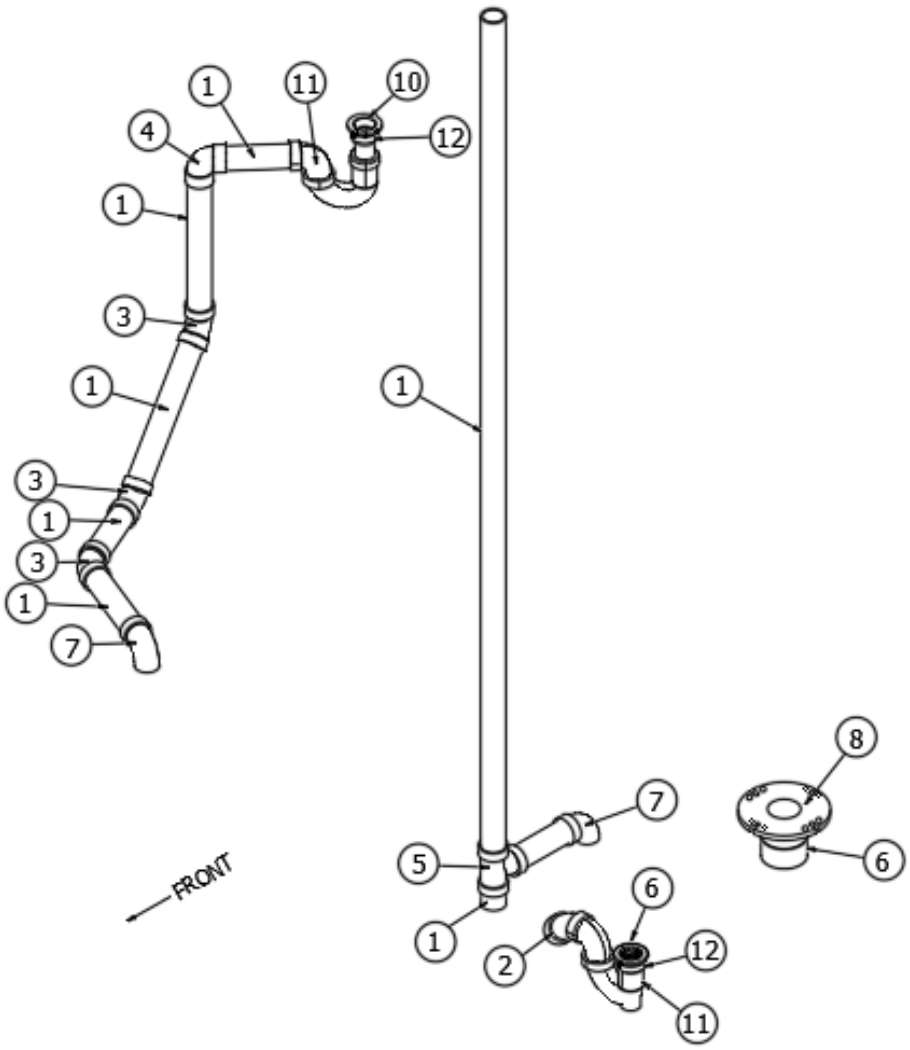

1.	601160-02	ABS Pipe, 1.5IN.
2.	600027	Elbow ABS Long St 45 Degrees
3.	600030	ELL- ABS 45 Degrees LG Turn
4.	600033	Elbow, 90 Degree 1.5in - Short
5.	600156	Tee, Sanitary 1.5IN X 1.5IN. X 1.5IN
6.	195362-39	Drain-Shower W/Blk Stop
7.	600662	1 1/2"" Elbow, Short Radius
8.	601266	Flange, Closet, 3in Hub X 4in Horn Hub, Slip Fitting
9.	601267-04	Nipple 3"" Dia. Thd One 10"" LG
10.	601813	Tail Piece-Lift/Turn Drain
11.	602164-01	P Trap W/Compression Nut 1.5"
12.	602164-02	Tailpiece W/Nuts & Washers 1.5"

2021 BASECAMP
PLUMBING, DRAIN SYSTEM

Toilet

690621-BOX Toilet, China, Dometic
601266 Toilet flange, Slip fit

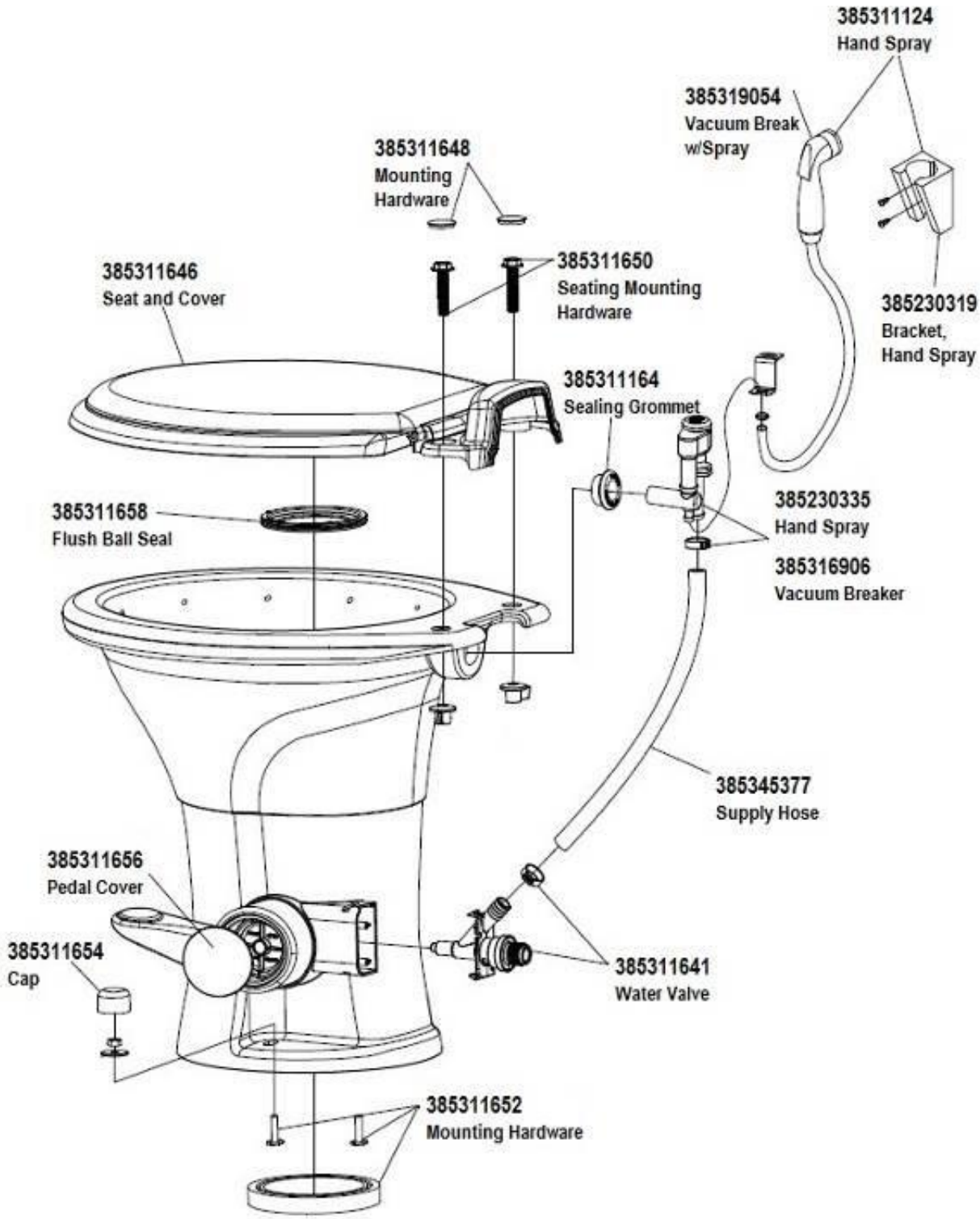

2021 BASECAMP
PLUMBING, DRAIN SYSTEM

Dump Valve Install, 16’

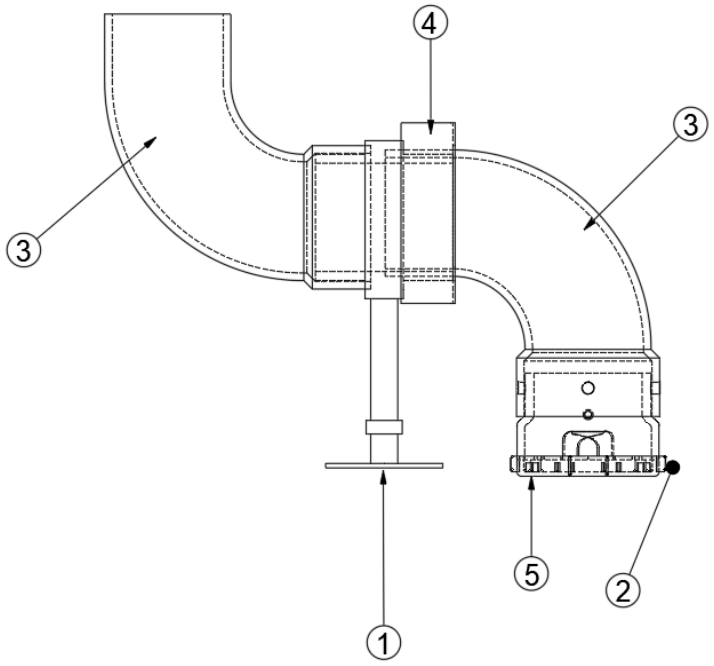

1.	601607-07	Termination Cap - 3" BAY
2.	115852	Bracket-Dump Valve Bracket - Lower
3.	600820	3""Single Socket 90 degree
4.	601607-06	Term. Adaptor - 3"" HUB X 3"" BAY
5.	601607-14	Valve Assy-3"SPIG X 3"SPIG #T40A

2021 BASECAMP
PLUMBING, DRAIN SYSTEM

Dump Valve Install, 20’

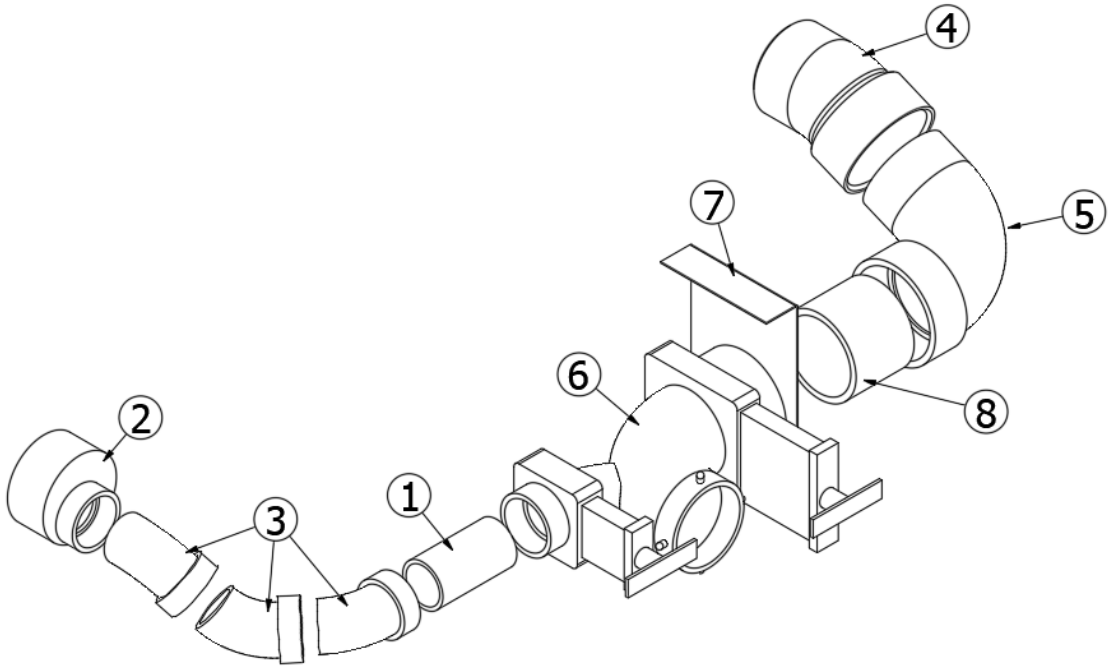

1.	601160-02	ABS Pipe, 1.5IN.
2.	195329-229	Reducer Adaptor 3" TO 1.5" 40740
3.	600027	Elbow ABS Long ST 45 Degrees
4.	601403	Elbow, ST. 22.5 Degrees 3IN ABS
5.	601531	Fitting-90 Degree 3" H X ST
6.	601482	Dump Valve Rotating Assy.
7.	114916	Bracket Dump Valve
8.	601160-04	ABS Pipe, 3IN.

2021 BASECAMP
PLUMBING, HEATING SYSTEM

Heat System, 16’

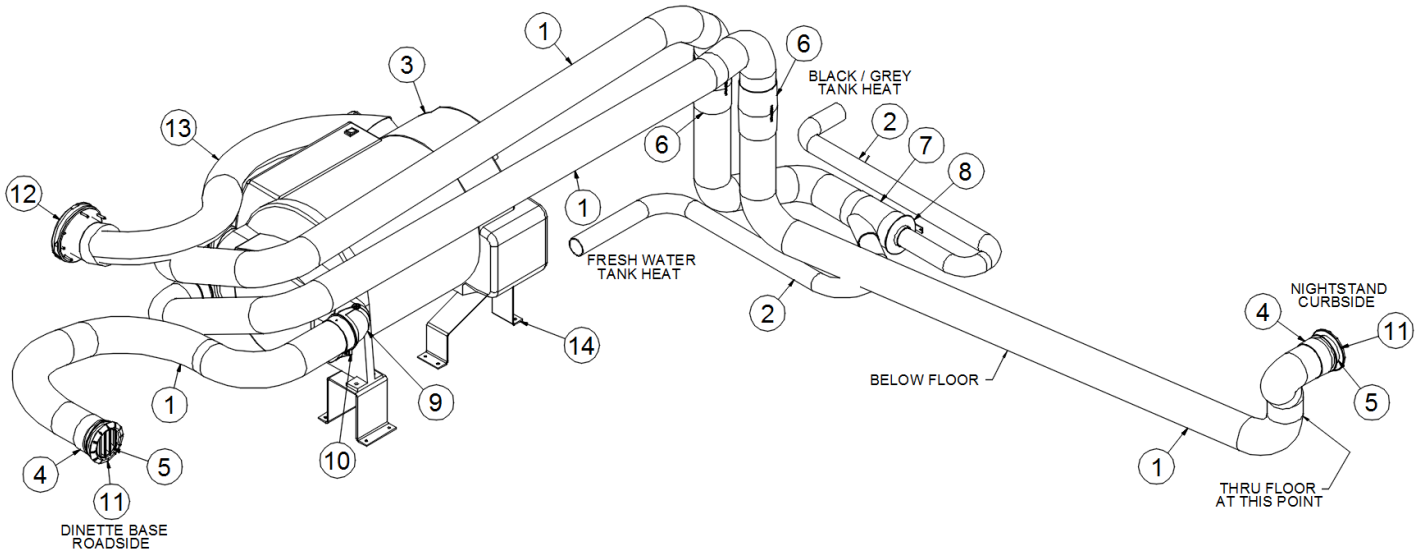

	943813	Heat System
1.	690704-06	Truma duct, 65mm
2.	690704-07	Truma duct, 35mm
3.	690705	Truma Combi Eco Plus
4.	690704-09	End outlet nut
5.	690704-10	End outlet, Black
6.	690704-11	Straight coupling
7.	690704-12	Branch wye, 35mm
8.	690704-13	Reducer, 35mm
9.	690704-14	Elbow, 90°
10.	690704-15	Blank cover
11.	690704-18	Lamella insert, Black
12.	690704-26	Cowl-Wall Inner
	690704-27	Cowl-Wall Outer Part Black
13.	690704-04	Air supply tube, 80mm
14.	455132	Support brackets
	690704-05	Exhaust duct, 55mm
	690704-08	Duct insulation sleeve, 10’
	690704-2400	Cover, CP Plus

2021 BASECAMP
PLUMBING, HEATING SYSTEM

Heat System, 20’

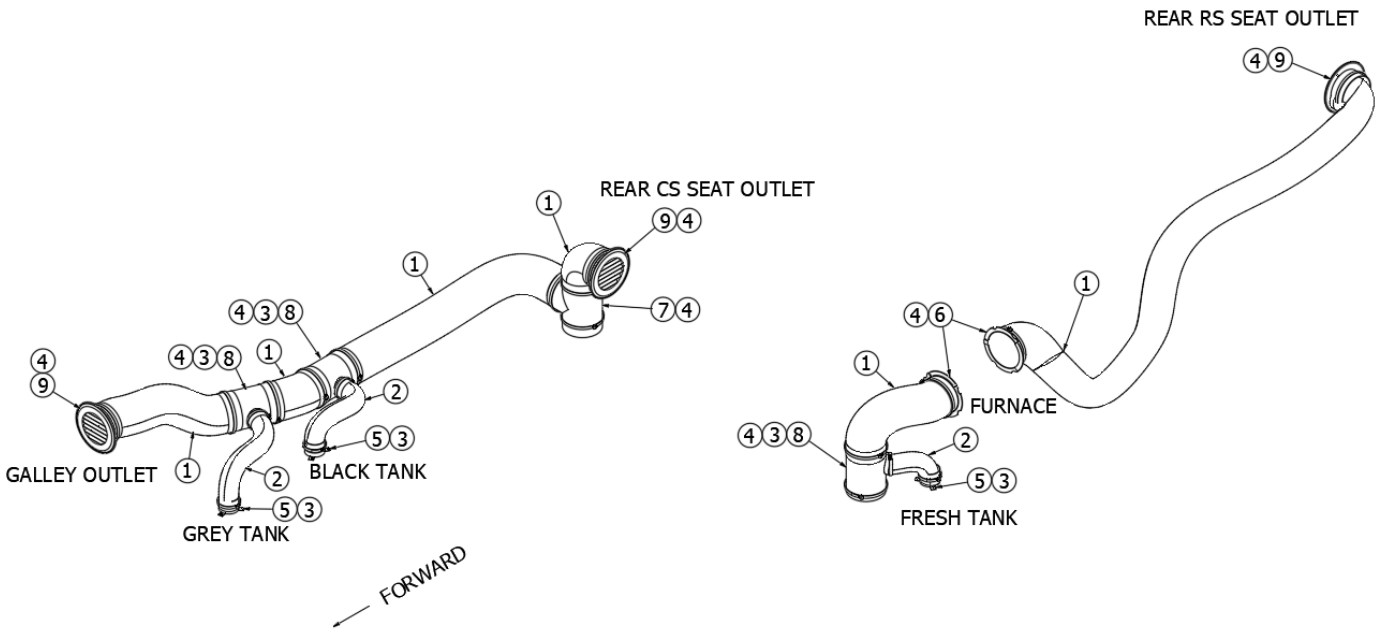

1.	600247	Hose - 4" Heat Duct Round Flex
2.	600193	2"Duct Thermaflex Flexible Air
3.	340084-28	Clamp, Hose - Size 2-1/4IN
4.	340084-60	Clamp, Hose - Size 4-1/4IN
5.	600184	Fitting- 2" Heat Duct
6.	600526	Flange, 4 In (Suburban)
7.	601338	Tee, Heat Duct, 4 X 4 X 4
8.	601348	Tee, Heat Duct, 4 X 4 X 2
9.	602394-03	Register-Black 4" #HV4BK
	602394-04	Adaptor-Black 2" #HV2BK
	114079	Adapter-Duct, 4.00" TO 2.00"
	602292	Tee-2X2X2 GALV

2021 BASECAMP
SEALERS, GASKETS

Sealers

360255-04	Sealer, Anti-wick
360001	Sealant, Butyl
365330-01	Sealant, Adseal, White
365330-02	Sealant, Adseal, Grey
365330-03	Sealant, Adseal, Aluminum Grey
365330-04	Sealant, Adseal, Black
28433W	Walbernize Super Seal
28430W-01	Sealant, Acryl-R, Gray, 16 oz. can

Gaskets

365495	Gasket Kit - BC 20
381665	Gasket, D-seal, Black
382337	Gasket, Corlon vent cap
382262	Gasket, Water heater
365001	Tape, double coated foam
685510	Seam tape, Black 1/32” x 7/8” x 200
365222-01	Tape double coated, .08 x .75"
382499	Gasket kit
382499-01	Exhaust fan gasket
382499-02	Exterior shower gasket
382499-03	Gravity water fill
382499-04	Receptacle gasket
382499-05	City water fill gasket
382499-06	Battery vent gasket
382499-07	Rear door hinge gasket
203594-04	Ceiling trim, Black

2021 BASECAMP
UPHOLSTERY

Dinette Seat Cushions, 16’

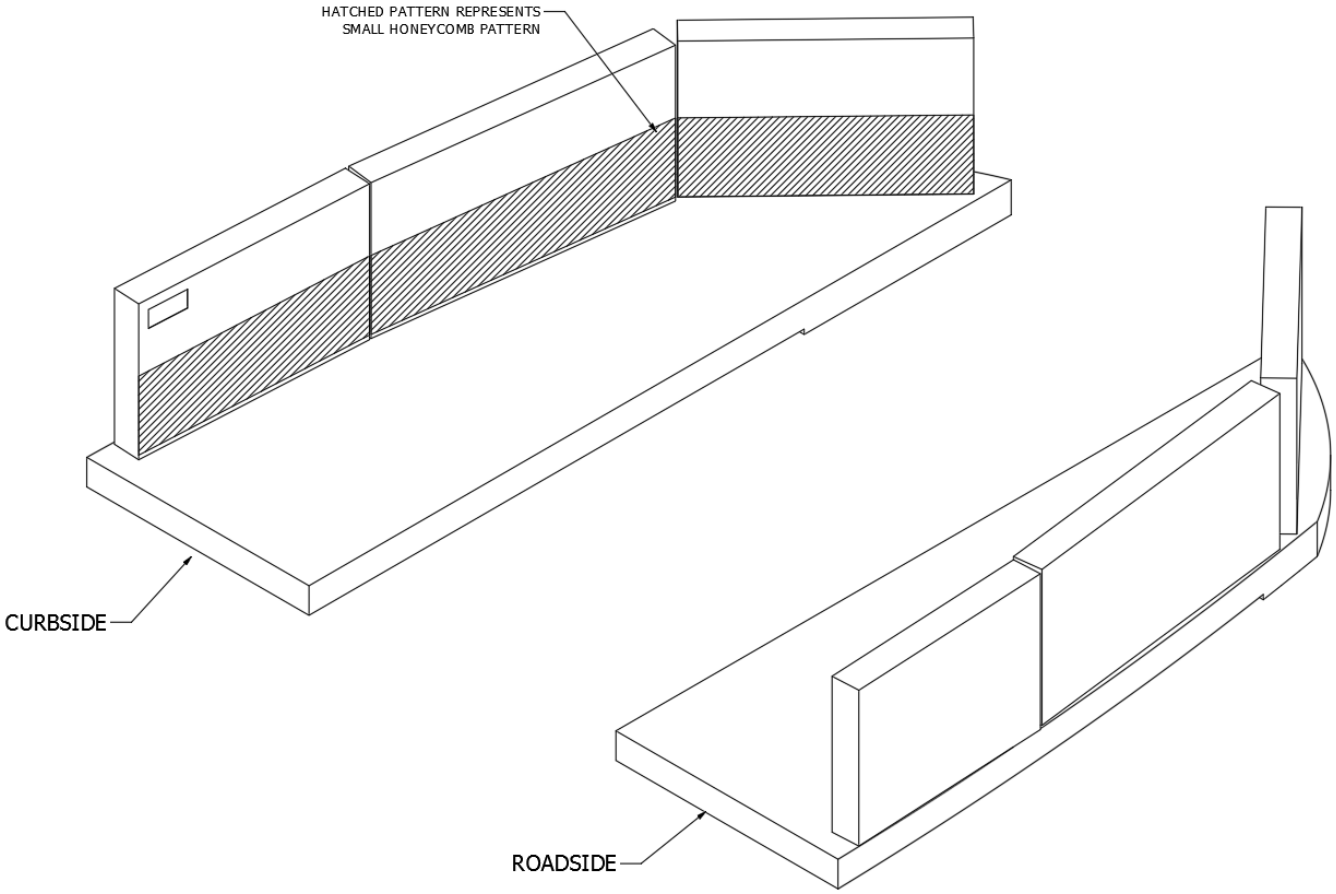

704743-01 Kit, Din Cushion, Glacier Lake
704743-02 Kit, Din Cushion, Forest Ridge
704743-03 Kit, Din Cushion, Red Rock
704742 Kit, Foam Cushion, Dinette

704742-01 Foam - Seat RS
704742-02 Foam - Seat CS
704742-03 Foam - Backrest, RS
704742-04 Foam - Backrest, RS & CS
704742-05 Foam - Backrest, CS
704742-06 Foam - Backrest, Rear

2021 BASECAMP
UPHOLSTERY

Front Dinette Seat Cushions, 20’

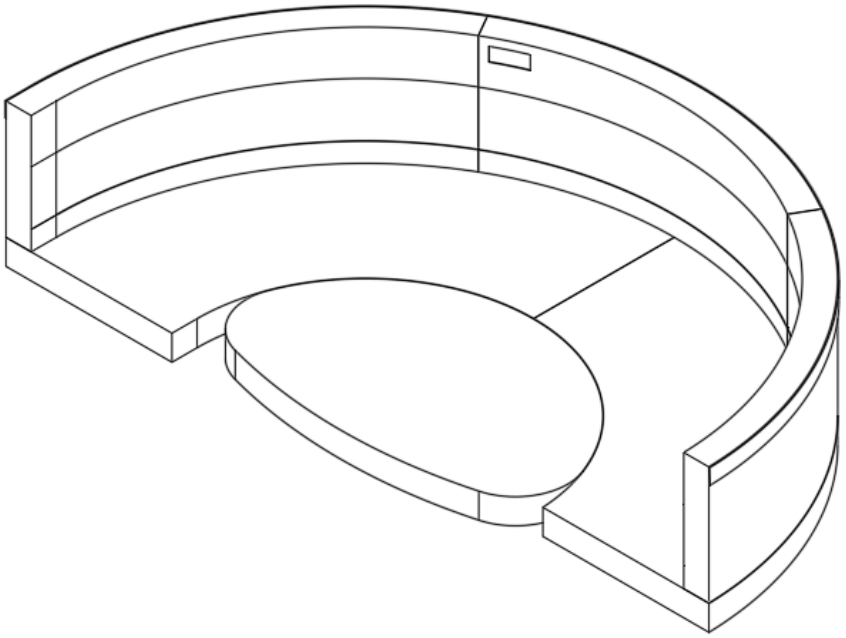

704744-01	Kit-Foam/Cushion Glacier Lake BC 20
704744-02	Kit-Foam/Cushion Forext Ridge BC 20
704744-03	Kit-Foam/Cushion Red Rock BC 20

Rear Dinette Seat Cushions, 20’

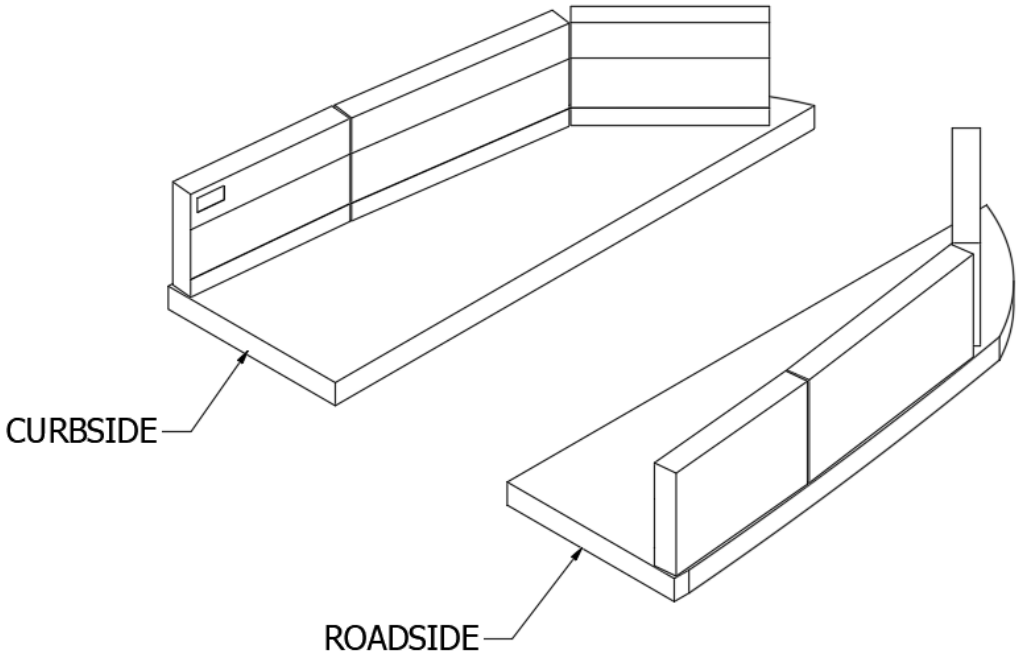

704745-01	Kit Foam/Cushion Rear Dinette - Glacier Lake 2.0
704745-02	Kit Foam/Cushion Rear Dinette - Forest Ridge
704745-03	Kit Foam/Cushion Rear Dinette - Red Rock

2021 BASECAMP
UPHOLSTERY

Décor Boards, Forest Ridge

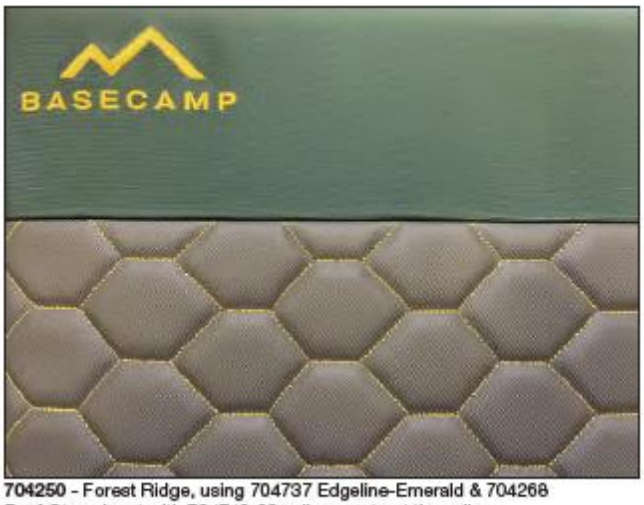

704250 - Forest Ridge, using 704737 Edgeline-Emerald & 704268 Reef-Stone inset with 704740-02 yellow contrast threading
Where used: Seating

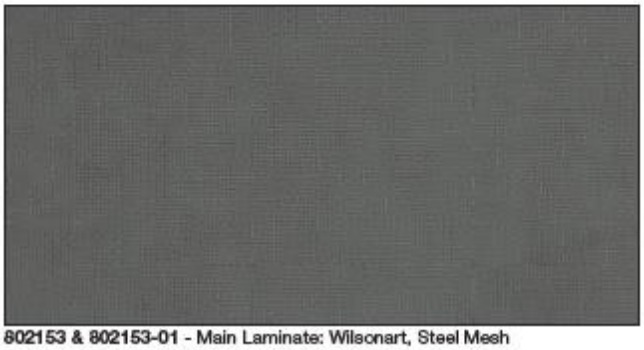

802153 & 802153-01 - Main Laminate: Wilsonart, Steel Mesh
Where used: Exterior of Lavy Walls & Countertops

802078-01 - Accent Laminate: Decotone, Colosseum Oak Pearl
Where used: Vertical grade of Galley, Walls, Seating Base under cushions

704547 - Vinyl Flooring: Beau Flor, Liana
Where used: Flooring

115754-03, 115755-03, 115767-03, 115768-03 - Cargo Bars
Where used: Overhead Cargo Bars with mesh (4 sizes)

Décor Boards, Glacier Lake

704250 - Glacier Lake, using 704541 Silvertex Jet & 704268 Reef-Stone inset with 704740-01 orange contrast threading
Where used: Seating

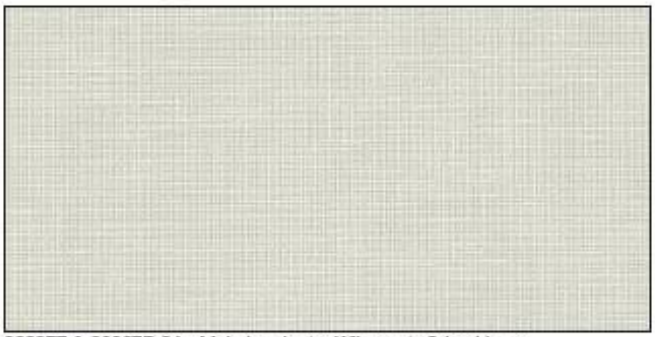

802077 & 802077-01 - Main Laminate: Wilsonart, Crisp Linen
Where used: Exterior of Lavy Walls & Countertops

802078-01 - Accent Laminate: Decotone, Colosseum Oak Pearl
Where used: Vertical grade of Galley, Walls, Seating Base under cushions

704547 - Vinyl Flooring: Liana
Where used: Flooring

115754-04, 115755-04, 115767-04, 115768-04 - Cargo Bars
Where used: Overhead Cargo Bars with mesh (4 sizes)

Décor Boards, Red Rock

704250 - Red Rock, using 704235 Simtex-Carbon & 704268 Reef-Stone inset with red contrast threading
Where used: Seating

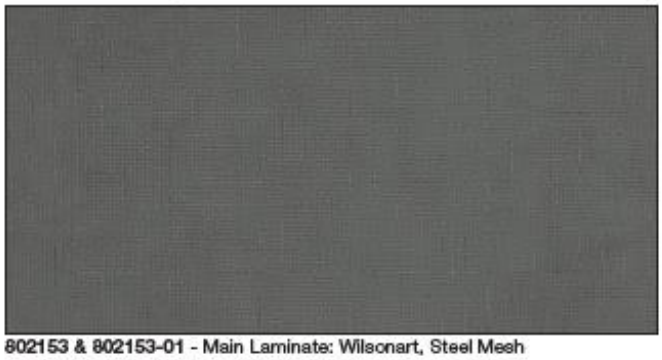

802153 & 802153-01 - Main Laminate: Wilsonart, Steel Mesh
Where used: Exterior of Lavy Walls & Countertops

802078-01 - Accent Laminate: Decotone, Colosseum Oak Pearl
Where used: Vertical grade of Galley, Walls, Seating Base under cushions

704547 - Vinyl Flooring: Liana
Where used: Flooring

115754-02, 115755-02, 115767-02, 115768-02 - Cargo Bars
Where used: Overhead Cargo Bars with mesh (4 sizes)

2021 BASECAMP
VENTS, FANS

Vent, Battery

203638-01	Vent, Cone, White
203638-02	Grille, White
382499-06	Battery vent gasket

Vent, Black Tank

690700-01	Vent pipe cover, White
382337	Gasket, Corlon, Vent Cap

Vent, Roof

690266-01	Power ventilator w/2” garnish
690266-07	Trim ring, White
690266-08	Trim ring, Silver

Exhaust Fan

512538-01	Vent, Exhaust only, Manual, Grey
382537	Ventadome- Nonpower BC
382499-01	Exhaust fan gasket

2021 BASECAMP
PANELING, EDGEBANDING, LAUAN

Paneling

802224	Pre-laminate Colosseum Oak Pearl Raw
802291	Panel-Pre-laminate Frosty/Crisp 12MM
802153	Laminate, Horizontal, Steel Mesh
802153-01	Laminate, Vertical, Steel Mesh
802077	Laminate, Horizontal, Velvet texture, Crisp Linen
802077-01	Laminate, Vertical, Velvet texture, Crisp Linen
802078-01	Laminate, Vertical, Colosseum Oak Pearl
801392	Pre-lam panel, 12mm, White liner/White Liner
802092	Pre-lam panel, 12mm, Colosseum Oak/White Liner
802095	Pre-lam panel, 12mm, Crisp Linen/Crisp Linen
802120	Pre-lam panel, 12mm, Colosseum Oak/Colosseum Oak
802155	Pre-lam panel, 12mm, Crisp Linen/Steel Mesh
802090	Pre-lam panel, 18mm, Crisp Linen/White Liner
802121	Pre-lam panel, 18mm, Colosseum Oak/White Liner
802154	Pre-lam panel, 18mm, Steel Mesh/White Liner
802292	Panel-Pre-laminate Frosty/Steel. Mesh 12MM
801809	Laminate, Vertical, White Liner
802541	Panel-12MM Crisp Linen/Wht Liner
801368	Panel-Prelam Whtliner/Whtliner 18mm (Sold In A 4' X 8' Sheet)
801438	Pnl-Prelam White Vinyl/Raw 2.7MM
802540	Pnl-Prelam 12MM Steel Mesh/Wht Liner

Edgebanding

365340-01	Edgebanding, PVC, 5/8”, Frosty White
365340-02	Edgebanding, PVC, 15/16”, Frosty White
365395-02	Edgebanding-.94" Crisp Linen
365464-02	Edgebanding, .94", Crisp Linen
365411-02	Edgebanding, .94", Steel Mesh
365465-02	Edgebanding 2MM - 15/16" Steel Mesh
365395-01	Edgebanding 1MM 5/8" Crisp Linen
365499-01	Edgeband-5/8" Colosseum Oak
365411-01	Edgebanding 1MM Steel Mesh 5/8

Lauan

800507-02	Panel, Lauan, ¼” x 4’ x 8’, raw/raw

2021 BASECAMP

PANELING, EDGEBANDING, LAUAN

Plywood

800506-06	Plywood, ¾” x 4’ x 8’
800506-05	Plywood, 5/8” x 4’ x 8’
800976-01	Plywood, tongue and groove, 19/32’ (floor)
801351	Plywood, Lite, 18MM (.75") 4' x 8'

Fill Sticks, Steel Mesh

360406-13	Fil-Stik Col.Oak Pear/Nat'l Elm (Oak Frost Ii)
360406-14	Fil-Stik Steel Mesh (Charcoal Grey)
360406-18	Fil Stik White Liner
360301-29	Seamfil-Colosseum Oak Pearl
360301-31	Seamfil-Wilsonart Steel Mesh
360358-22	Caulk-Colosseum Oak Pearl
360358-24	Caulk-Wilsonart Steel Mesh

Fill Sticks, Crisp Linen

360301-02	Caulk Seamfil - Frosty White, 1 Oz Tube
360301-29	Seamfil-Colosseum Oak Pearl
360301-37	Seamfil-Wilsonart Crisp Linen
360358-22	Caulk-Colosseum Oak Pearl
360358-29	Caulk-Wilsonart Crisp Linen
360406-13	Fil-Stik Col.Oak Pear/Nat'l Elm (Oak Frost Ii)
360406-17	Marfil Cream,Waxed Maple,Crisp Linen
360406-18	Fil Stik White Liner

2021 BASECAMP
TRIMS

Trim

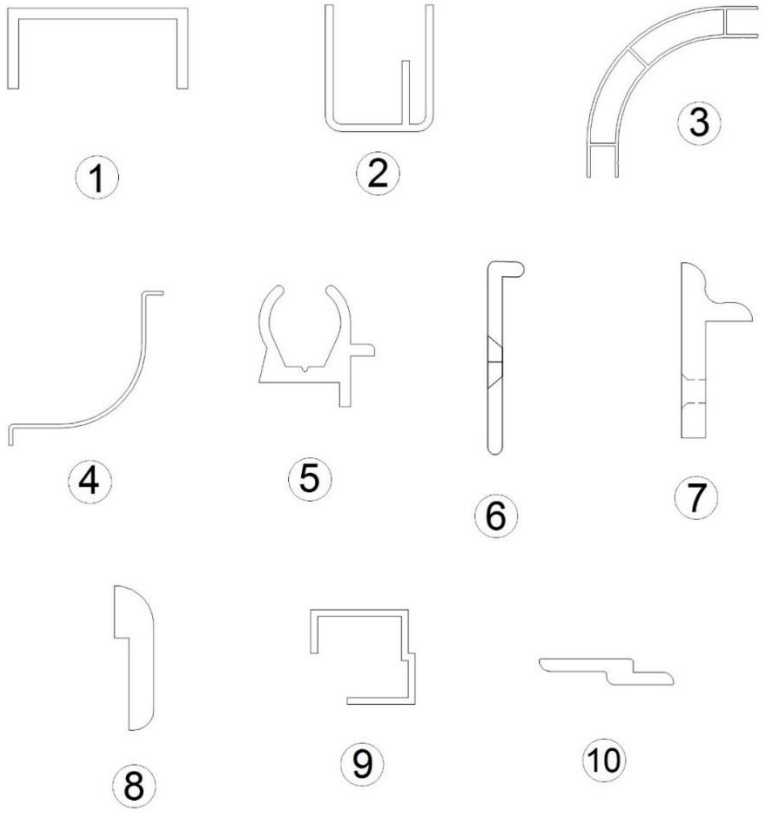

1.	115730	C-extrusion, Interlocking
2.	115665	Door frame extrusion
3.	115682	Extrusion, 3” radius corner
4.	115683	Extrusion, 2” radius inside corner
5.	115686	Extrusion, Keder rail
6.	115134	Extrusion, Laminate trim
7.	115064	Trim, Aluminum counter top
8.	203837	Trim, PVC lower, Black
9.	115734	U-extrusion, Interlocking
10.	115766	Extrusion, Z-clip
	203445	T-molding, 9/16”, Black
	203440	T-molding, Flexible plastic, Black
	203710	T-molding, Flexible plastic, Almond
	203941-01	Molding-5 7/8" Putty Gray (Crisp Linen)
	203942-01	Molding-T 13/16 Storm Gray
	203138-06	Wall Extrusion-Plas Ash Grey
	381610-05	Cover-Cap Almond Plastic
	381610-01	Cover Cap Plas. European White
	381610-04	Cap Cover-Black Plastic