adventure, inspired by

AIRSTREAM

# 2022 BASECAMP Parts Book

# 2022 BASECAMP
## SECTION I

## APPLIANCES


Air Conditioner ..... I-1
Furnace and Water Heater ..... I-1
Microwave ..... I-2
Range and Cooktop ..... I-2
Refrigerator ..... I-2


## EXTERIOR SHELL


Front End ..... I-3
Aft End ..... I-5
Wall, Roadside 16’ ..... I-8
Wall, Curbside 16’ ..... I-10
Wall, Roadside 20’ ..... I-12
Wall, Curbside 20’ ..... I-14
Roof ..... I-16
Roof Trim ..... I-18
Underbelly Wraps ..... I-20
Body Protector ..... I-21
Wrap Protectors and Holdbacks ..... I-22


## INTERIOR SHELL


Interior Skin ..... I-24
Main Door Threshold ..... I-24

# 2022 BASECAMP
## SECTION II

## CHASSIS


Axles ..... II-1
Tires and Wheels ..... II-1
Tires and Wheels, X-Package ..... II-1
X-Package Lift Kit ..... II-1
Spare Tire Carrier ..... II-2
Step ..... II-2
Hose Carrier ..... II-2
Hitch Jack ..... II-2
Stabilizing Jacks ..... II-2
A-Frame ..... II-3


## DECALS, EXTERIOR TRIM


Decals, Logos, and Nameplates ..... II-4
Keder Rail ..... II-4
Reflectors ..... II-4


## DOORS, WINDOWS


Main Door ..... II-5
Compartment Door ..... II-7
Rear Door ..... II-8
Rear Door Netting ..... II-8
Windows 16’ ..... II-9
Windows 20’ ..... II-10
Window Stone Guards ..... II-11


## WINDOW SHADES


Window Shades ..... II-12
Window Shades Hardware ..... II-12

# 2022 BASECAMP
## SECTION II

## ELECTRICAL

### 110 Volt


Shore Line Cord ..... II-13
Converter ..... II-13
Breakers ..... II-13
Junction Boxes ..... II-13
Receptacles and USB Ports ..... II-13


### 12 Volt


Battery and Battery Box ..... II-14
7-Way Cable ..... II-14
Switches ..... II-14
Battery Disconnect ..... II-14
Breakaway Switch ..... II-14
Monitor System ..... II-14
Breakers ..... II-16
Fuses ..... II-16
Solar Panel System ..... II-16
Interior Lights ..... II-16
Exterior Lights ..... II-16
Taillights ..... II-17


## ENTERTAINMENT


Airstream Connected ..... II-18

# 2022 BASECAMP
## SECTION III

## FLOOR COVERINGS

Floor Coverings ..... III-1

## FURNITURE

### STORAGE

Overhead Storage Nets ..... III-2
Overhead Bars ..... III-2
Storage Bins ..... III-2
Rear Storage Compartment, Floor ..... III-3
Plumbing Storage ..... III-3

### LAVATORY

Bath Modules ..... III-4
Bath Door ..... III-8

### GALLEY

Galley 16’ ..... III-9
Galley 20’ ..... III-15
Refrigerator Cabinet 20’ ..... III-18
Storage Cabinet, 20’ ..... III-22

### LOUNGE

Dinette Seat, Roadside 16’ ..... III-24
Dinette Seat, Curbside 16’ ..... III-25
Rear Dinette Seat, Roadside 20’ ..... III-27
Rear Dinette Seat, Curbside 20’ ..... III-29
Front Dinette Seat, 20’ ..... III-31
Dinette Tables 16’ ..... III-33
Dinette Table Storage ..... III-33
Dinette Tables 20’ ..... III-34

# 2022 BASECAMP
## SECTION III

## HARDWARE


Main Door Latch with Deadbolt.....III-36
Rear Door Latch and Lock.....III-36
Interior Hinges.....III-36
Exterior Hinges .....III-36
Exterior Latches and Handles.....III-37
Interior Latches and Handles .....III-37
Head knocker.....III-38
Bathroom Accessories.....III-38
Shower Curtain .....III-38
Clothesline .....III-38
Rivets .....III-39
Screws.....III-39


## SAFETY EQUIPMENT


Detectors and Fire Extinguishers .....III-40


## LABELS AND TAGS


Labels and Tags .....III-41

# 2022 BASECAMP
## SECTION IV

## PLUMBING

### LPG SYSTEM


LP Tank and Regulator ..... IV-1
LP Tank Cover ..... IV-1
LPG Systems ..... IV-2
Propane Port, Exterior ..... IV-4


### FRESH WATER SYSTEM


Faucet, Galley ..... IV-5
Faucet, Shower ..... IV-5
City Water Hook-Up ..... IV-5
Fresh Water Tank Fill ..... IV-5
Water Pump ..... IV-5
Fresh Water Tank ..... IV-5
Fresh Water Fittings ..... IV-6
Fresh Water Lines ..... IV-7
Winterization Kit ..... IV-9


### DRAIN SYSTEM


Sink and Shower ..... IV-10
Black and Gray Tank ..... IV-10
Drain Systems ..... IV-11
Toilet ..... IV-13
Dump Valves ..... IV-14


### HEATING SYSTEM


Heat Systems ..... IV-16


## SEALERS, GASKETS


Sealers ..... IV-18
Gaskets ..... IV-18

# 2022 BASECAMP
## SECTION IV

### UPHOLSTERY

Dinette Seat Cushions ..... IV-19
Décor Boards ..... IV-21

### VENTS, FANS

Vent, Battery ..... IV-24
Vent, Black Tank ..... IV-24
Vent, Refrigerator ..... IV-24
Vent, Roof ..... IV-24
Exhaust Fan ..... IV-24

### PANELING, EDGEBANDING, LAUAN

Paneling ..... IV-25
Edgebanding ..... IV-25
Lauan ..... IV-25
Plywood ..... IV-26

### TRIMS

Trim ..... IV-27

# 2022 BASECAMP
## APPLIANCES

### Air Conditioner

| | |
|---|---|
| 690781-01 | Air conditioner, Mach 8, 13.5 BTU |
| 690781-02 | Heat strip |
| 690781-03 | Deluxe cool/heat ready, White |
| 690781-04 | Drain kit |
| 382687 | Kit, Leveling pads and bolts |

### Furnace and Water Heater, BC16

| | |
|---|---|
| 690705 | Forced air furnace & water heater, Truma Combi Eco Plus |
| 690705-0500 | CP Plus Control Panel |
| 690705-09 | Accessory kit |
| 690705-01 | Drain valve |
| 690705-02 | Adapter |
| 690705-03 | Cold water connection |
| 690705-04 | Hot water connection w/vent |
| 690705-06 | Room temperature sensor |
| 690705-07 | Interface cable |
| 690705-100 | non-return valve, .5” |
| 690705-101 | Fuse, 10-amp slo-blow |
| 690704-26 | Cowl-Wall Inner |
| 690704-27 | Cowl-Wall Outer Part Blk |
| 690704-09 | End outlet nut |
| 690704-10 | End outlet, Black |
| 690704-18 | Lamella insert, Black |
| 690704-2400 | Cover, CP Plus |
| 513028 | Tank heater switch, Black |

# 2022 BASECAMP
## APPLIANCES

### Furnace, BC20

| | |
|---|---|
| 690616 | Furnace, 16k BTU, Suburban |
| 690616-01 | Intake Tube 5" |
| 690616-02 | Thermostat for Furnace 690616 |
| 690616-100 | Exhaust Extension for Furnace 690616 |
| 690616-101 | Limit Switch for Furnace |
| 600247 | Hose - 4" Heat Duct Round Flex |
| 600193 | 2"Duct Thermaflex Flexible Air |
| 340084-28 | Clamp, Hose - Size 2-1/4IN |
| 600184 | Fitting- 2" Heat Duct |
| 601348 | Tee, Heat Duct, 4 x 4 x 2 |
| 602394-03 | Register-Black 4" #HV4BK |

### Water Heater, BC20

| | |
|---|---|
| 690711-01 | Heater-Water IW60 #5186A |
| 690711-02 | Vent-IW60 Water Heater #260595 |
| 690711-03 | Control-Digital IW60 #161291 |
| 690711-04 | Vent cap, 15-1/2” |
| 690711-05 | Vent cap, 6-3/4” |

### Microwave

| | |
|---|---|
| 690648-02 | Microwave, Stainless Steel, Contoure |
| 382454 | Foam-Microwave Stabilizer BC |

### Range and Cooktop

| | |
|---|---|
| 690784 | Cooktop, 2-burner, Suburban |

### Refrigerators

| | |
|---|---|
| 690749-01 | Refrigerator, 12VDC, 3.1 CF, Novakool, BC16 |
| 386206 | Louvered Vent |
| 115166-08 | Insert Refrigerator Panel 16.56 x 28 |
| 690789-01 | Refrigerator, 12VDC, 4.3 CF, Novakool, BC20 |
| 114879-05 | Aluminum sheet, .4 x 33” x 173.5” |

# 2022 BASECAMP
## EXTERIOR SHELL

Front End, BC16

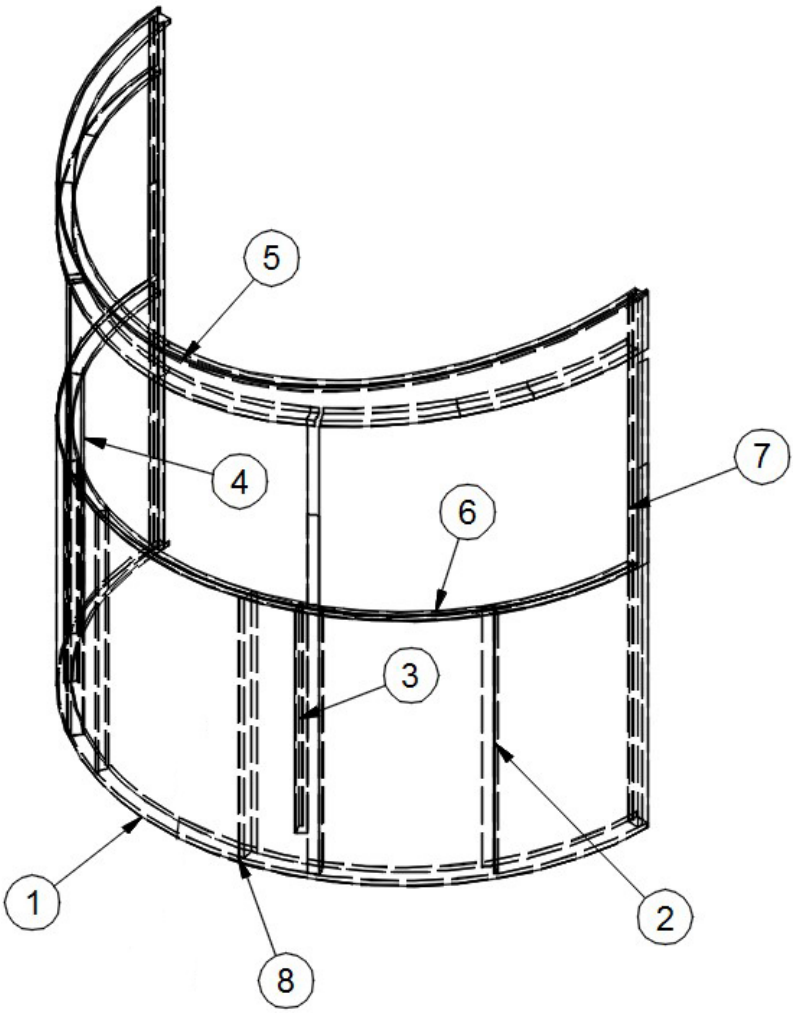


| | | |
|---|---|---|
| | 923286 | End Shell, Front |
| 1. | 115725 | Z extrusion, Front floor |
| 2. | 115661-02 | Lower vertical supports |
| 3. | 115661-03 | Window Vertical supports, RS |
| 4. | 115661-04 | Window, Vertical supports, CS |
| 5. | 115717 | Roof halo, Z front |
| 6. | 115726 | Window bow, Lower |
| 7. | 115730-01 | C-extrusion, Interlocking |
| 8. | 104408 | Z extrusion |
| | 116283-02 | Exterior skin, Front lower |
| | 116283-01 | Exterior skin, Front upper |
| | 371453 | Window assembly, Front center |
| | 372275 | Window, Front center, Glass only |
| | 365001 | Seam tape |
| | 365222-01 | Tape, Double coated |
| | 365300 | Sika 95, .09” x .5” |

# 2022 BASECAMP
## EXTERIOR SHELL

Front End, BC20

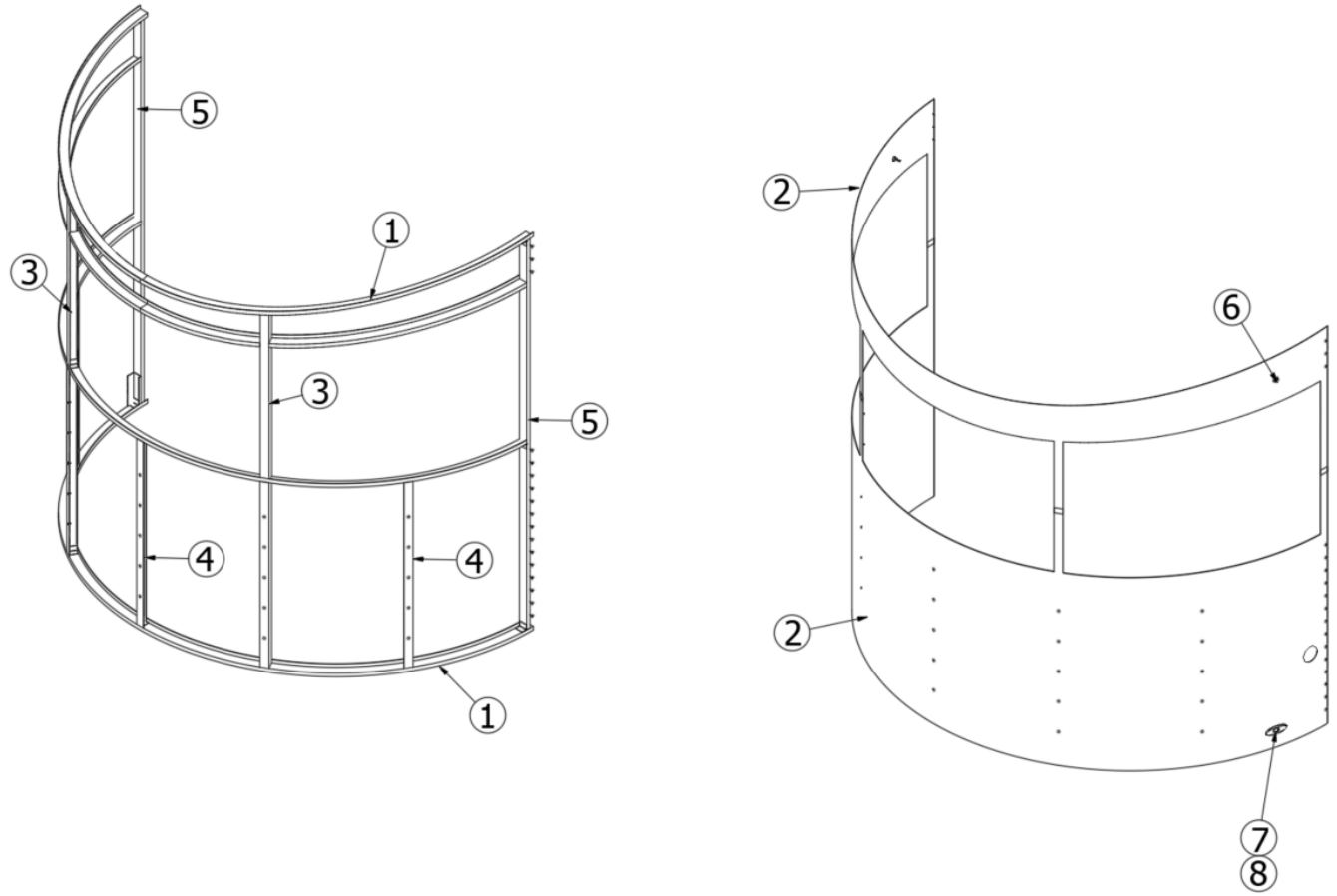


| | | |
|---|---|---|
| | 923494 | End Shell Assy - Front BC 20 |
| 1. | 104408 | Extr., Z Rib - Die No. 240572 (Sold in A 19.16 Ft. Piece) |
| 2. | 114879-06 | Alum. Sheet .40x 33 x 152.5" (Sold in A 35 Sf Sheet) |
| 3. | 115661 | Extrusion-Vertical Supports BC |
| 4. | 115661-02 | Support-Lower Vertical BC |
| 5. | 115730 | C Extrusion-Interlocking Shell |
| 6. | 513025 | Marker/Clearance Lt Yellow |
| 7. | 512967 | Reflector-Yellow Oval #A11AXB |
| 8. | 512964 | Light-Yellow Marker/Clearance |
| | 114414 | Angle, Formed, 1 x 1 x 1.5 |

# 2022 BASECAMP
## EXTERIOR SHELL

Aft End, BC16

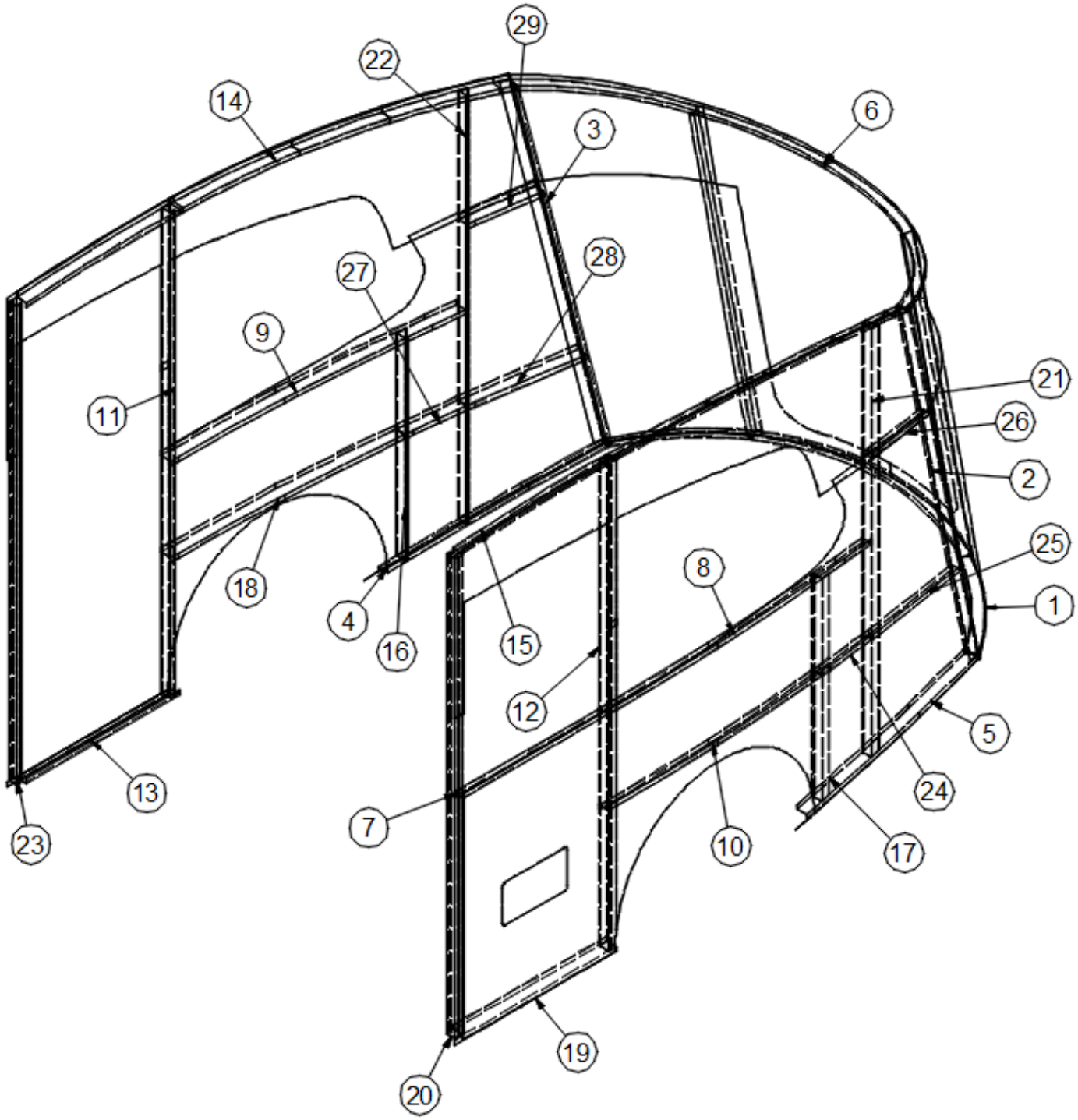


Parts Listed on Next Page

# 2022 BASECAMP
## EXTERIOR SHELL

### Aft End, BC16

| | | |
|---|---|---|
| | 923287 | End Shell, Rear |
| 1. | 115731 | Z-extrusion, Rear floor |
| 2. | 115661-06 | U-channel, Rear RS |
| 3. | 115661-05 | U-channel, Rear CS |
| 4. | 115733 | Z-extrusion, Rear floor CS |
| 5. | 115732 | Z-extrusion, Rear floor RS |
| 6. | 115743 | Rear roof halos |
| 7. | 115742 | Horizontal lavy brace, RS |
| 8. | 115741 | Horizontal window brace, RS |
| 9. | 115740 | Horizontal window brace, CS |
| 10. | 115739 | Horizontal wheel well brace, RS |
| 11. | 115661-09 | Rear door, CS |
| 12. | 115661-10 | Rear door, RS |
| 13. | 115735 | Z-extrusion, Rear CS straight |
| 14. | 115744 | Roof halo, CS |
| 15. | 115745 | Roof halo, RS |
| 16. | 115661-07 | U-channel, Aft wheel, CS |
| 17. | 115661-08 | U-channel, Aft wheel, RS |
| 18. | 115738 | Horizontal wheel well brace, CS |
| 19. | 115736 | Z-extrusion, Rear RS straight |
| 20. | 365300 | Sika 95, .09” x .5” |
| 21. | 115661-11 | End shell support, RS |
| 22. | 115661-12 | End shell support, CS |
| 23. | 115734-01 | U-extrusion, Interlocking |
| 24. | 115795 | RS horizontal wheel well brace, Mid |
| 25. | 115796 | RS horizontal wheel well brace, Rear |
| 26. | 115804 | Z-extrusion, RS upper seam |
| 27. | 115797 | CS horizontal wheel well brace, Mid |
| 28. | 115798 | CS horizontal wheel well brace, Rear |
| 29. | 115805 | Z-extrusion, CS upper seam |
| | 968465 | Rear cargo door |
| | 372280 | Window, Rear cargo door |

# 2022 BASECAMP
## EXTERIOR SHELL

### Aft End, BC20

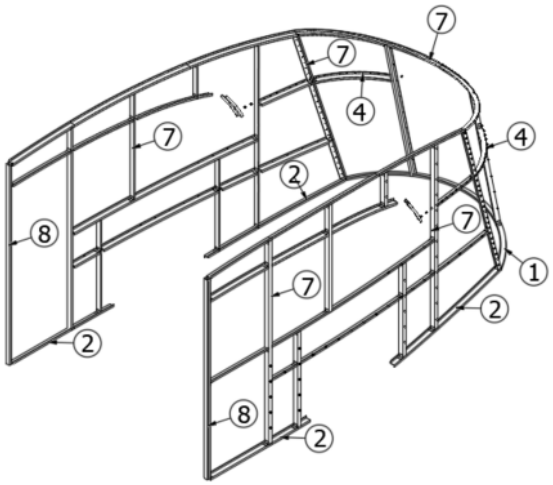


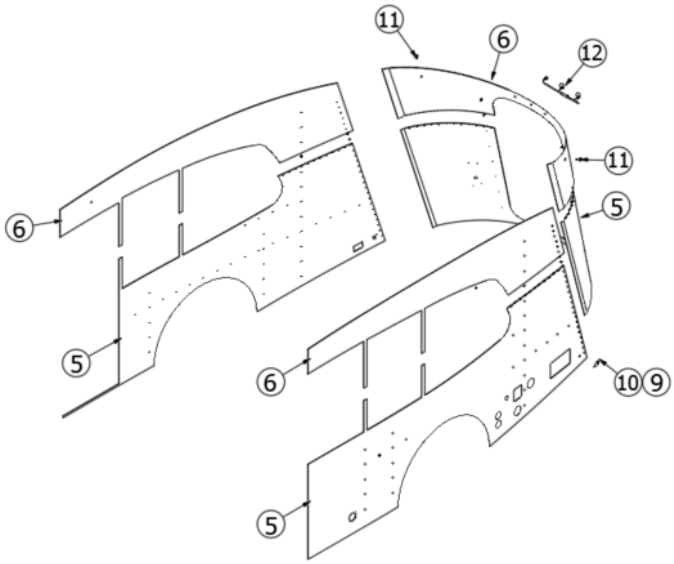


| | | |
|---|---|---|
| 1. | 115725 | Z Extrusion-Floor Frt BC |
| 2. | 104408 | Extr., Z Rib - Die No. 240572 (Sold in A 19.16 Ft. Piece) |
| 3. | 115743 | Halo - Rear Roof BC |
| 4. | 114414 | Angle, Formed, 1 x 1 x 1.5 |
| 5. | 114880-06 | Alum. Sheet .040 x 51 x 152.5" (Sold in A 54 Sf Sheet) |
| 6. | 114879-06 | Alum. Sheet .40 x 33 x 152.5" (Sold in A 35 Sf Sheet) |
| 7. | 115661 | Extrusion-Vertical Supports BC |
| 8. | 115734 | U Extrusion Interlocking |
| 9. | 512965 | Light-Red Marker/Clearance |
| 10. | 512968 | Reflector-Red Oval #A11RXB |
| 11. | 513026 | Marker/Clearance Lt Red |
| 12. | 512971 | Kit-Red Light ID #MCL12RK3 BC |

# 2022 BASECAMP
## EXTERIOR SHELL

Wall, Roadside, BC16

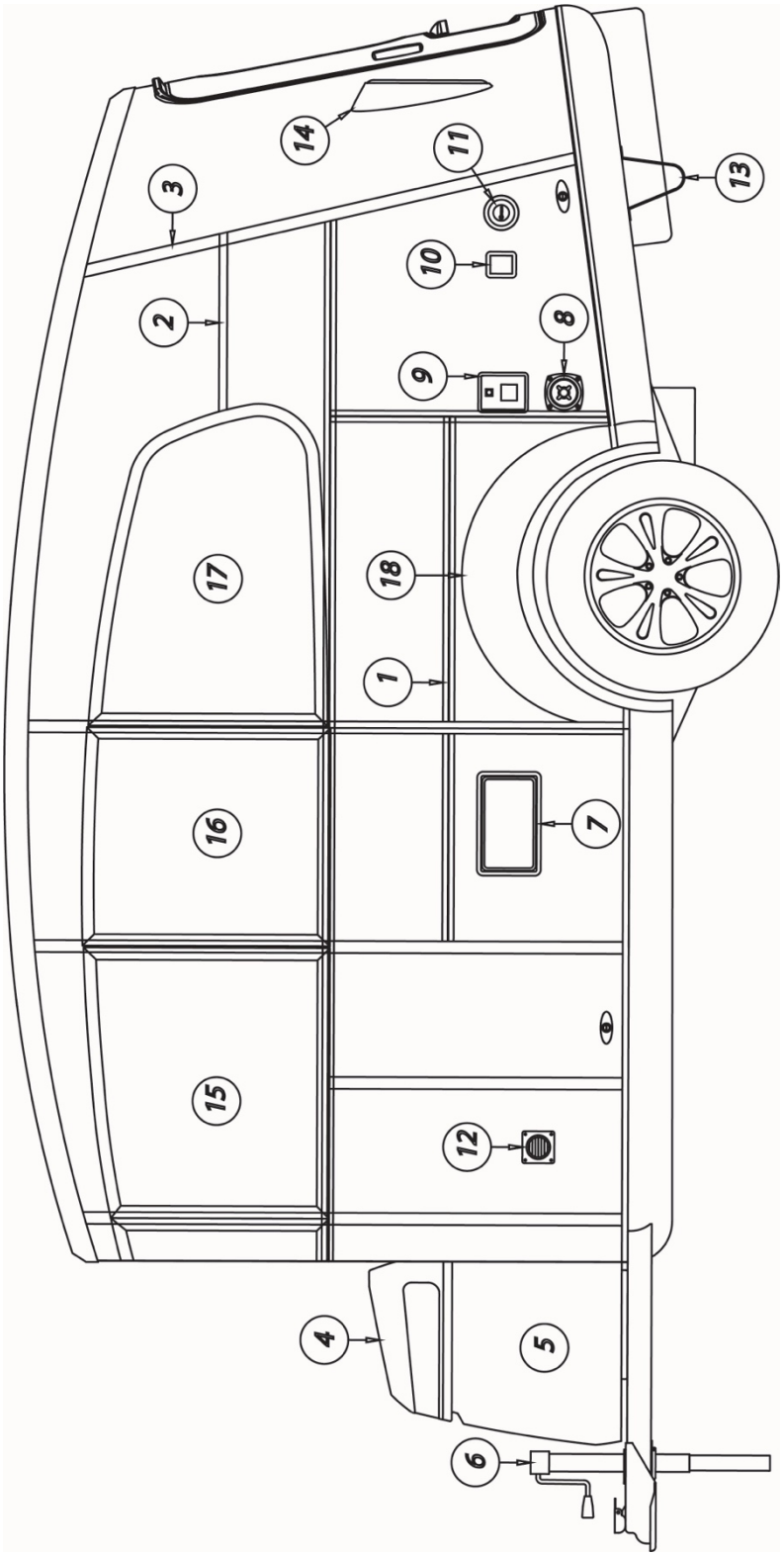


Parts Listed on Next Page

# 2022 BASECAMP
## EXTERIOR SHELL

### Wall, Roadside, BC16

| | | |
|---|---|---|
| 1. | 115739 | Horizontal wheel well brace, RS |
| 2. | 115804 | Z-extrusion, RS upper seam |
| 3. | 115661-06 | U-channel, Rear RS |
| 4. | 203860 | LP lid |
| 5. | 203856 | LP shroud body |
| 6. | 455845 | Hitch jack, Manual |
| 7. | 381766 | Access hatch, Exterior shower |
| 8. | 601392-06 | City water fill, 50 PSI |
| 9. | 601194 | Water fill, Fresh |
| 10. | 513797 | Power inlet, 30A Smart Plug, Gray |
| 11. | 690704-26 | Cowl-Wall Inner |
| | 690704-27 | Cowl-Wall Outer Part Blk |
| 12. | 203638-02 | Grille, Battery vent |
| 13. | 401042-01 | Stabilizer jack, 22” |
| 14. | 115670-01 | Taillight casting, RS |
| 15. | 371452 | Window assembly, RS front |
| 16. | 371451 | Window assembly, RS flat |
| 17. | 371459 | Window assembly, RS rear |
| 18. | 203992 | Exterior wheel well arch, RS |
| | 203990 | Inner wheel well, RS |
| | 372274 | Window, RS front, Glass only |
| | 372281 | Window, RS flat, Glass only |
| | 372277 | Window, RS rear, Glass only |

# 2022 BASECAMP
## EXTERIOR SHELL

Wall, Curbside, BC16

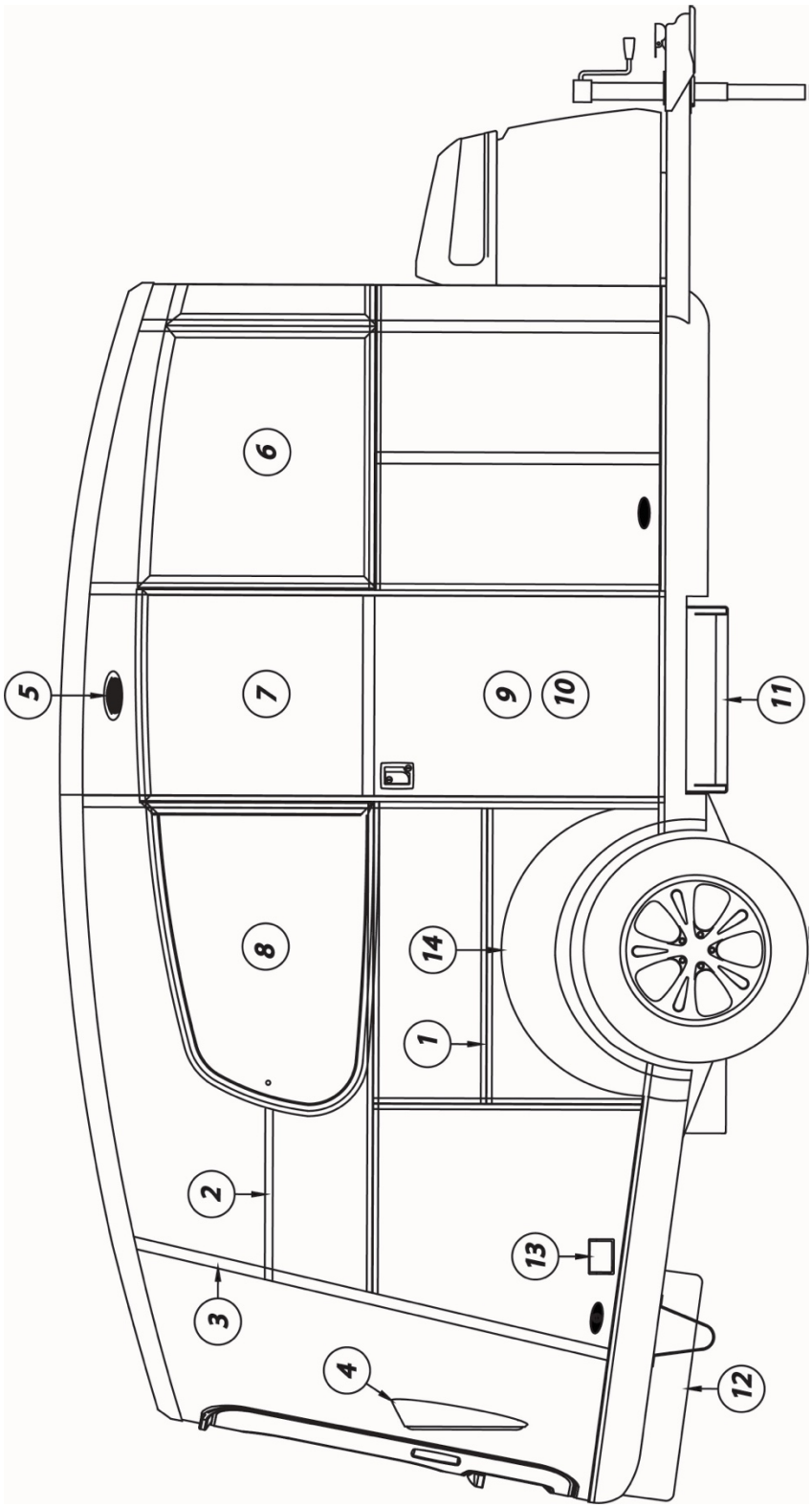


Parts Listed on Next Page

# 2022 BASECAMP
## EXTERIOR SHELL

### Wall, Curbside, BC16

| | | |
|---|---|---|
| 1. | 115738 | Horizontal wheel well brace, CS |
| 2. | 115805 | Z-extrusion, CS upper seam |
| 3. | 115661-05 | U-channel, Rear CS |
| 4. | 115670-02 | Taillight casting, CS |
| 5. | 512793 | LED porch light, Chrome |
| 6. | 371454 | Window assembly, CS front |
| 7. | 372282 | Window, CS door |
| 8. | 371458 | Window assembly, CS rear |
| 9. | 968440 | Door, CS flat |
| 10. | 382351 | Screen door, Retractable |
| 11. | 400962 | Step, Main door, Steel |
| 12. | 455172 | Winch, Spare tire |
| 13. | 512741 | Waterproof cover w/gasket, Gray |
| 14. | 203993 | Exterior wheel well arch, CS |
| | 203991 | Inner wheel well, CS |
| | 372273 | Window, CS front, Glass only |
| | 372276 | Window, CS rear, Glass only |

# 2022 BASECAMP
## EXTERIOR SHELL

Wall, Roadside, BC20

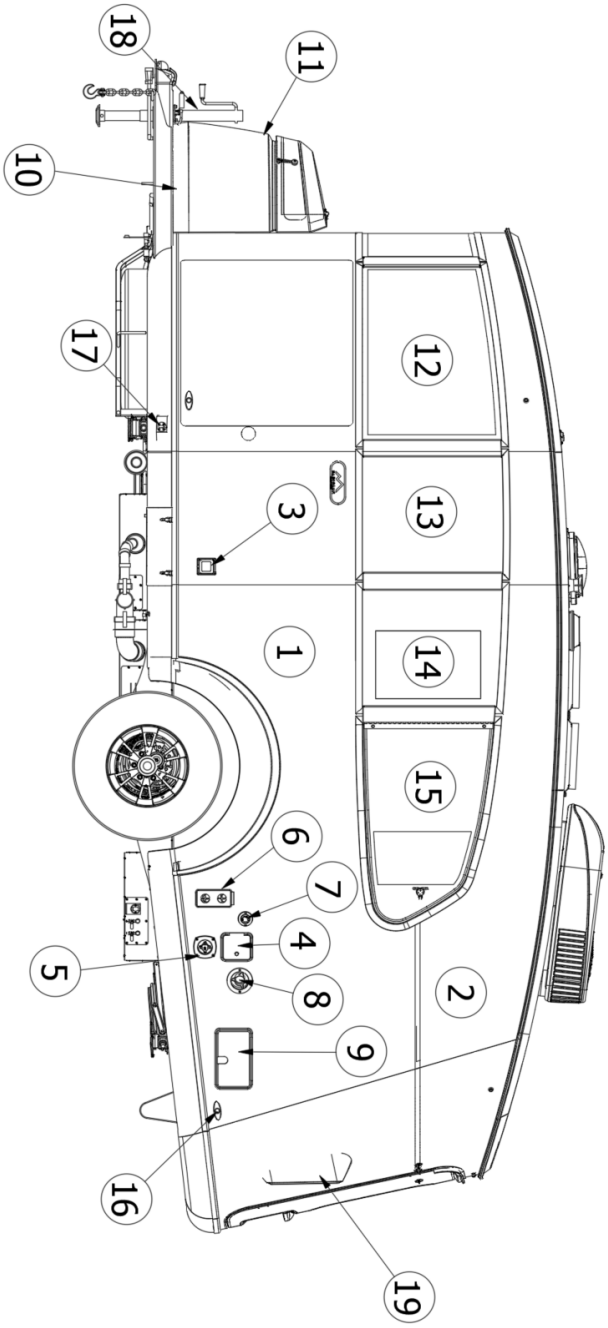


Parts Listed on Next Page

# 2022 BASECAMP
## EXTERIOR SHELL

### Wall, Roadside, BC20

| | | |
|---|---|---|
| 1. | 114880-06 | Alum. Sheet .04 x 51 x 152.5" (Sold in A 54 Sf Sheet) |
| 2. | 114879-06 | Alum. Sheet .4 x 33 x 152.5" (Sold in A 35 Sf Sheet) |
| 3. | 513797 | Inlet-30A Smart plug-Grey |
| 4. | 601194 | Water Fill W/Lock Gray |
| 5. | 601392-06 | Water Fill-City W/REG. CSA Chrome |
| 6. | 690616 | Furnace-Duct16ooo BTU Suburban |
| 7. | 601441-02 | Black tank flush |
| 8. | 690711-02 | Vent-IW60 Water Heater #260595 |
| 9. | 602326 | Shower-Exterior |
| 10. | 203861 | Tray- LP Black BC |
| 11. | 203856 | Shroud- LP Body BC |
| 12. | 371475 | Window Assy Front RX BC20 |
| 13. | 371478 | Window Assy - RS FLAT |
| 14. | 371479 | Window ASSY - RS Curved BC 20 |
| 15. | 371459-01 | Window Assy - RS Rear BC 20 |
| 16. | 512965 | Light-Red Marker/Clearance |
| | 512968 | Reflector-Red Oval #A11RXB |
| 17. | 513033 | Bracket, Portable solar panel port |
| 18. | 455845 | Hitch jack, Manual |
| 19. | 115670-02 | Casting, RS taillight |
| | 512961 | Light, Stop/turn/tail, Red |

# 2022 BASECAMP
## EXTERIOR SHELL

Wall, Curbside, BC20

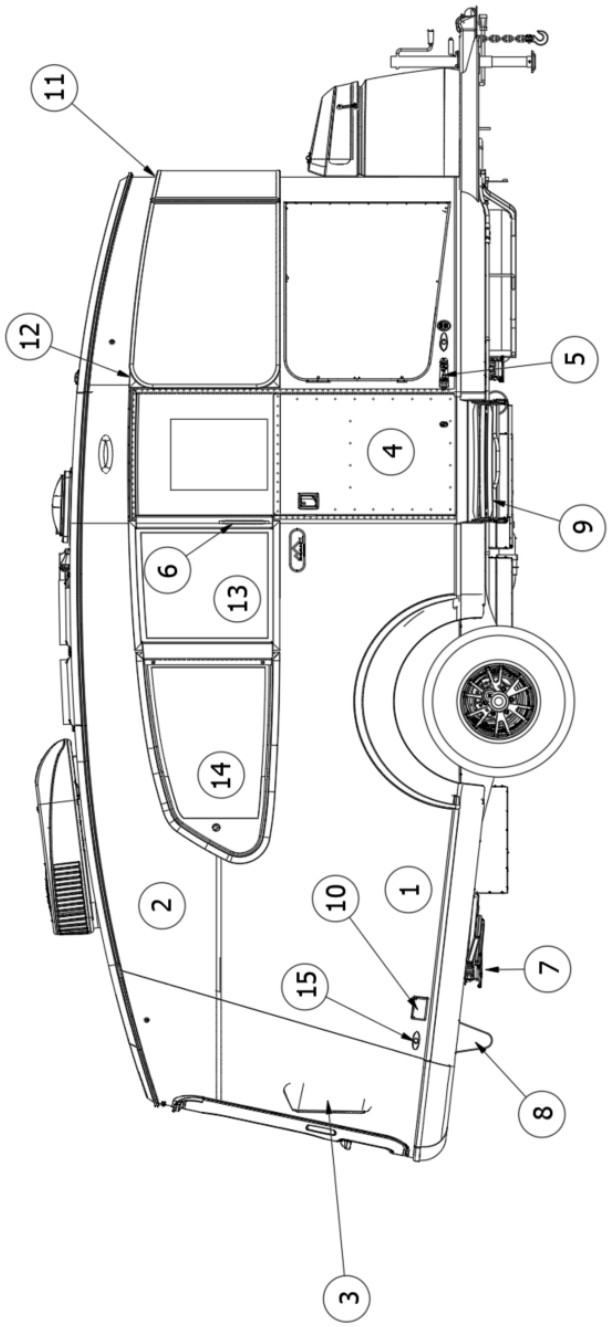


Parts Listed on Next Page

# 2022 BASECAMP
## EXTERIOR SHELL

### Wall, Curbside, BC20

| | | |
|---|---|---|
| 1. | 114880-06 | Alum. Sheet .04 x 51 x 152.5" (Sold in A 54 Sf Sheet) |
| 2. | 114879-06 | Alum. Sheet .4 x 33 x 152.5" (Sold in A 35 Sf Sheet) |
| 3. | 115678-01 | Bracket, CS taillight |
| | 512961 | Light, Stop/turn/tail, Red |
| 4. | 968440 | Main Door |
| 5. | 386314 | Main door stay |
| | 116003-01 | Door Latch Bracket |
| | 382624 | Rubber Bumper |
| 6. | 101171-01 | Grab handle, Main door, Black |
| 7. | 401102 | Assy, Stabilizer Jack, 28" |
| 8. | 411034 | Skid Plate |
| 9. | 400962 | Step-Main Dr Steel 24" |
| 10. | 500563-03 | Recept-White 15 A#WRDU15-WT |
| 11. | 371477 | Window Assy - Front Center |
| 12. | 371476 | Window Assy - Front CS BC 20 |
| 13. | 371480 | Window Assy - CS Curved BC 20 |
| 14. | 371458 | Window Assy-CS Rear BC |
| 15. | 512965 | Light-Red Marker/Clearance |
| | 512968 | Reflector-Red Oval #A11RXB |

# 2022 BASECAMP
## EXTERIOR SHELL

Roof, BC16

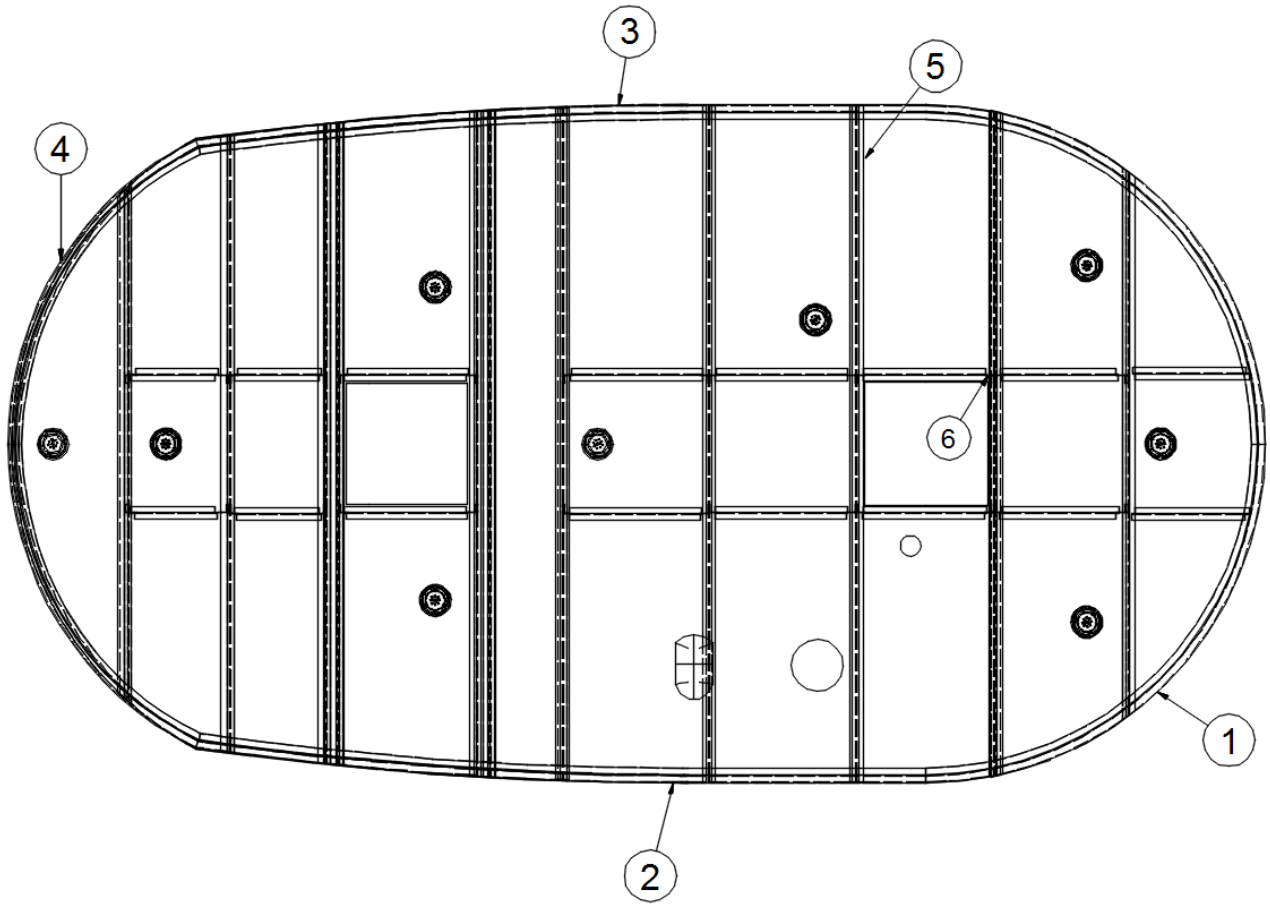


| | | |
|---|---|---|
| | 923280 | Roof Assembly |
| 1. | 115714 | U-halo, Front |
| 2. | 115715-01 | U-halo, CS |
| 3. | 115715-02 | U-halo, RS |
| 4. | 115716 | U-halo, Rear |
| 5. | 104707-06 | Extrusion, I section |
| 6. | 114414 | Angle, Formed |
| | 325004-01 | Rivet, 1/8” x .5”, Clear Anodized |
| | 365334 | Tape, Sealfoam w/PSA one side |
| | 365001 | Tape, Double coated foam |
| | 114880-05 | Aluminum, .4 x 51” x 173.5” |
| | 104408 | Z-bar, .075 x 1.75 x .75 |
| | 685510 | Seam tape, Black rubber |

# 2022 BASECAMP
## EXTERIOR SHELL

### Roof, BC20

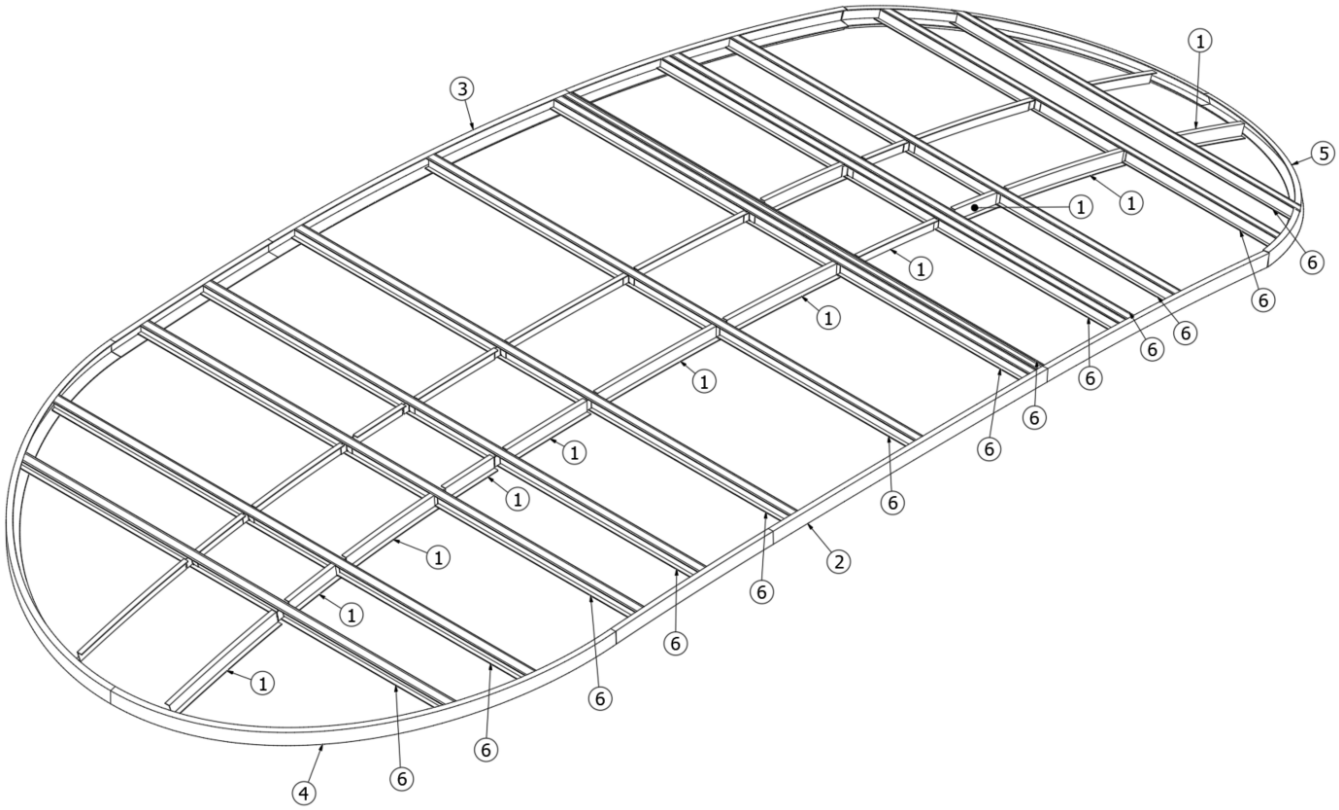


| | |
|---|---|
| 923502 | Roof Assy BC 20 |

| | |
|---|---|
| 1. 104408 | Extr., Z Rib - Die No. 240572 (Sold in A 19.16 Ft. Piece) |
| 2. 923502-17 | Halo-RS Roof-Stretch Bent BC20 |
| 3. 923502-18 | CS Roof "U" Halo Stretch Bent |
| 4. 923502-19 | Front Roof U Halo Stretch Bent |
| 5. 115716 | U Halo - Rear BC |
| 6. 104707-06 | Extrusion "I" 258” 6063-T4 (Sold Ina 21.5 Ft Piece) |
| 114414 | Angle Formed 1 x 1 x 1.5 |
| 114880-06 | Alum. Sheet .04 x 51 x 152.5” (Sold in A 54 Sf Sheet) |

# 2022 BASECAMP
## EXTERIOR SHELL

Roof Trim, BC16

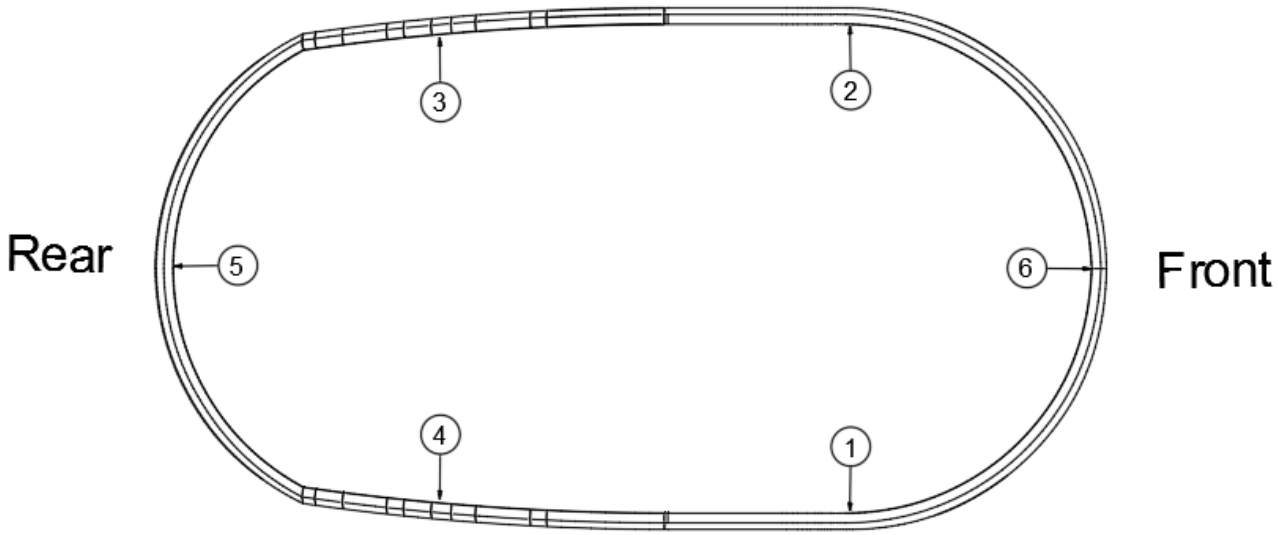


| | | |
|---|---|---|
| 1. | 203867-01 | Roof trim, CS |
| 2. | 203867-02 | Roof trim, RS |
| 3. | 203867-03 | Roof trim, RS rear |
| 4. | 203867-04 | Roof trim, CS rear |
| 5. | 203867-06 | Roof trim, Front center |
| 6. | 203867-05 | Roof trim, Rear center |
| | 115717 | Halo, Z front |
| | 115743 | Halo, Rear roof |
| | 115744 | Halo, CS roof |
| | 115745 | Halo, RS roof |

# 2022 BASECAMP
## EXTERIOR SHELL

Roof Trim, BC20

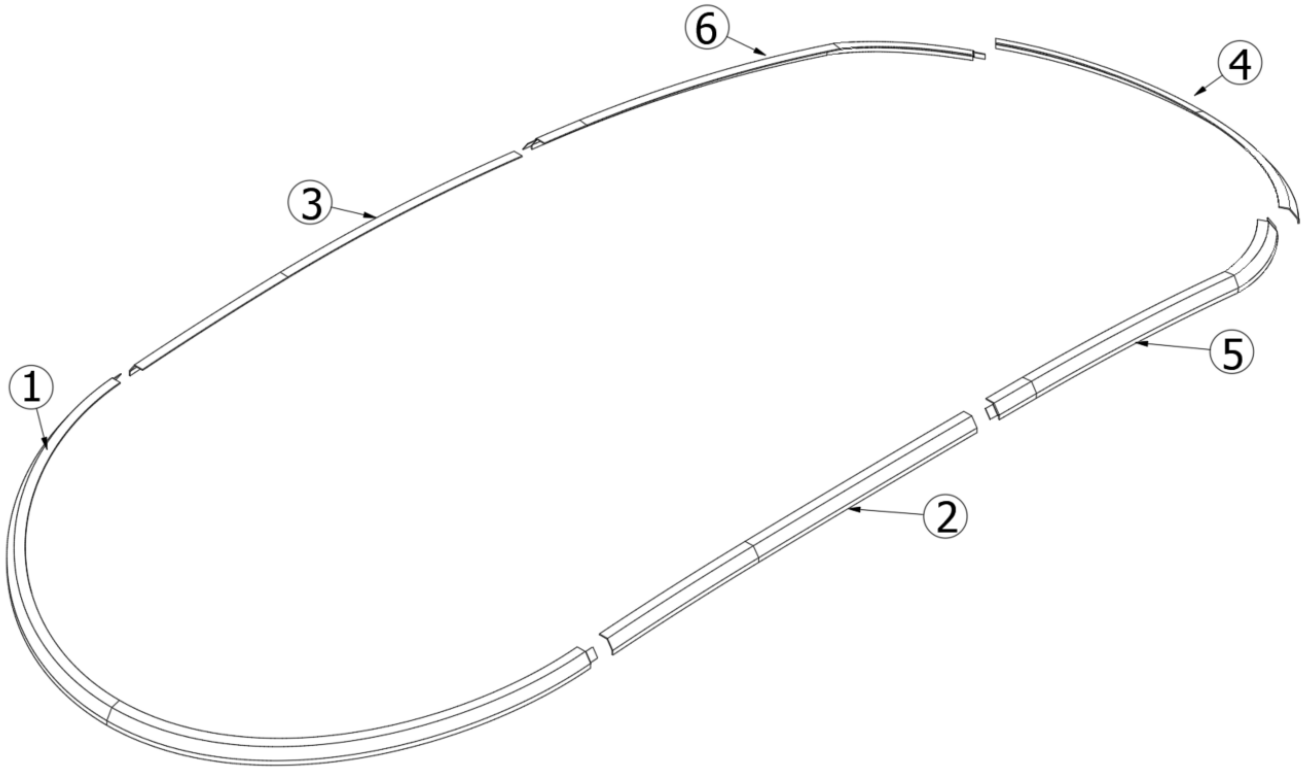


| | |
|---|---|
| 1. 204175-1 | Roof Trim BC 20 |
| 2. 204175-2 | Roof Trim RS Front BC 20 |
| 3. 204175-3 | Roof Trim S Frt BC 20 Mirrored |
| 4. 204175-4 | Roof Trim BC 20 |
| 5. 204175-5 | Roof Trim RS Rear BC 20 |
| 6. 204175-6 | Roof Trim - CS Rear BC 20 |

# 2022 BASECAMP
## EXTERIOR SHELL

Underbelly Wraps, BC16

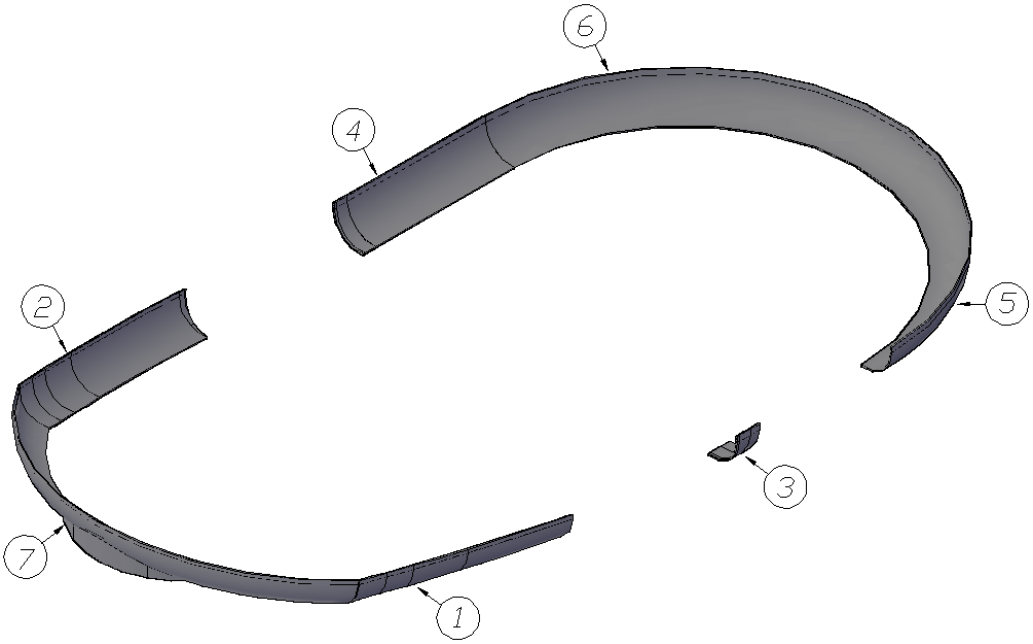


| | |
|---|---|
| 1. 203850-01 | Rear CS skirting |
| 2. 203850-02 | Rear RS skirting |
| 3. 203850-03 | Step CS skirting |
| 4. 203850-04 | Straight RS skirting |
| 5. 203850-05 | Front CS skirting |
| 6. 203850-06 | Front RS skirting |
| 7. 203850-07 | Rear center underbelly |

# 2022 BASECAMP
## EXTERIOR SHELL

### Underbelly Wraps, BC20

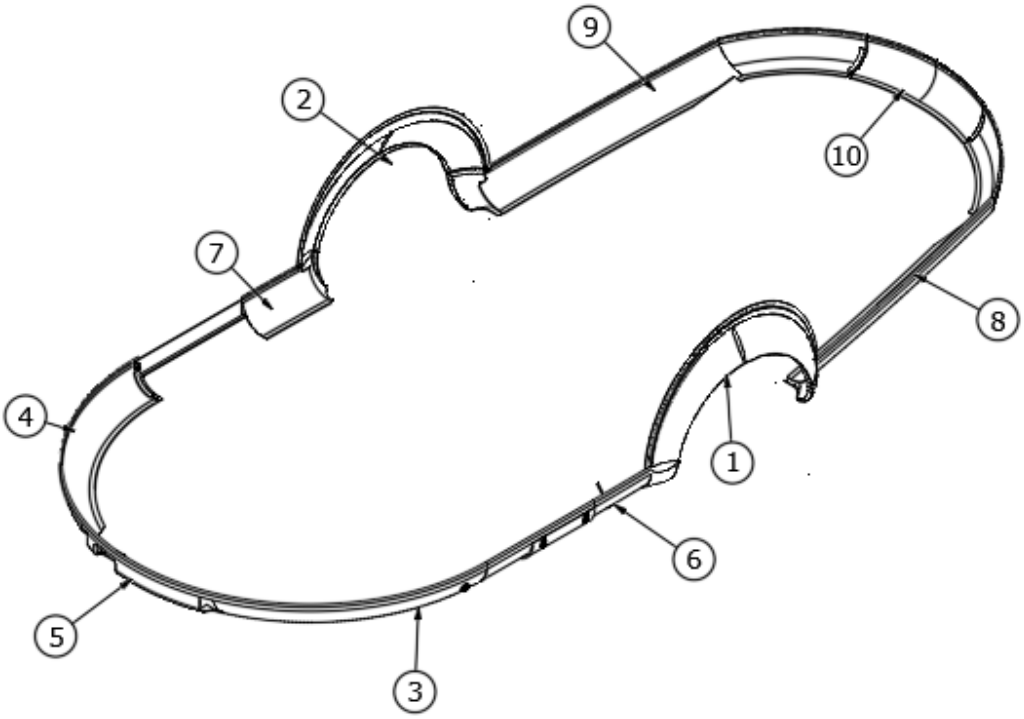


| | | |
|---|---|---|
| 1. | 204165-01 | Wheel Arch Ext Curbside BC 20 |
| 2. | 204165-02 | Wheel Arch Ext RS BC 20 |
| 3. | 204168-01 | Banana Wrap RS FR Corner BC 20 |
| 4. | 204168-02 | Banana Wrap CS FR Corner BC 20 |
| 5. | 204168-03 | Banana Wrap - Frt Center BC 20 |
| 6. | 204169-01 | Banana Wrap RS FR BC 20 |
| 7. | 204169-02 | Banana Wrap CS Front BC 20 |
| 8. | 204170-01 | Banana Wrap RS Rear Corner BC 20 |
| 9. | 204170-02 | Banana Wrap CS Rear Corner BC 20 |
| 10. | 204173 | Banana Wrap Rear BC 20 |
| | 203837 | Trim-PVC Lower Black BC (Sold In a 100 Ft Roll) |

### Body Protector

| | |
|---|---|
| 203881 | 3M film body protector |

# 2022 BASECAMP

## Wrap Protectors and Holdbacks, BC16X

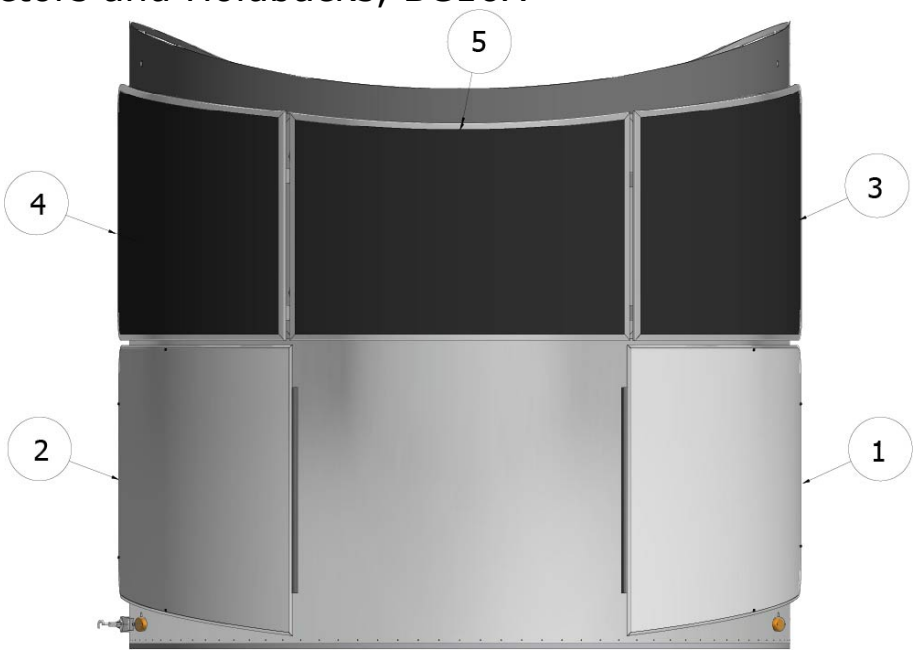


| | | |
|---|---|---|
| 1. | 968857 | Stone guard assembly, RS |
| 2. | 968858 | Stone guard assembly, CS |
| 3. | 923379 | Solar guard assembly, RS |
| 4. | 923378 | Solar guard assembly, CS |
| 5. | 923380 | Solar guard assembly, Center |
| | 381605-03 | Piano Hinge |
| | 114819-03 | Wrap protector holdback assembly, Large |
| | 114819-02 | Wrap protector holdback assembly, Small |

# 2022 BASECAMP

## Wrap Protectors and Holdbacks, BC20X

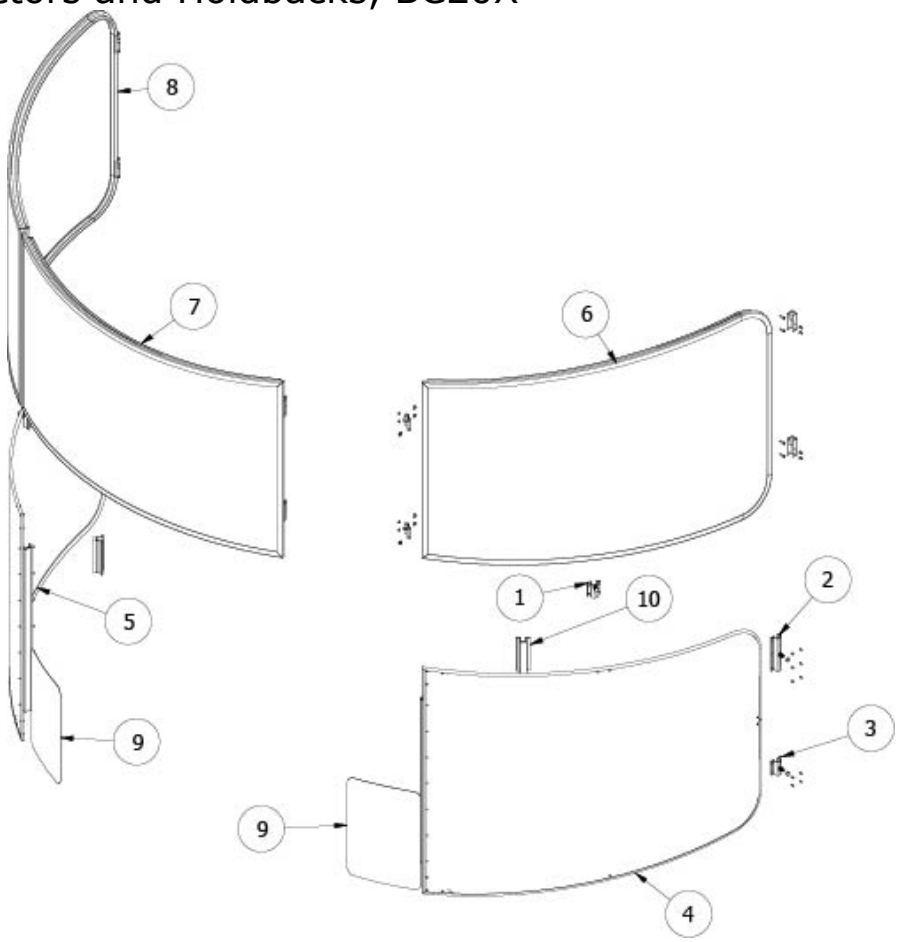


| | | |
|---|---|---|
| 1. | 114819-02 | Assembly Wrap Protector Hold Back |
| 2. | 114819-03 | Assembly Wrap Protector Hold Back |
| 3. | 114819-04 | Assembly Wrap Protector Hold Back |
| 4. | 923524 | Assembly Stone Guard RS |
| 5. | 923525 | Assembly Stone Guard CS |
| 6. | 923526 | Assembly Solar Guard RS |
| 7. | 923527 | Assembly Solar Guard Center |
| 8. | 923528 | Assembly Solar Guard CS |
| 9. | 203881-01 | Body Film Protector 10" x 15.0 |
| 10. | 101401 | Extrusion, Door latch housing/stone guard |
| | 345417 | Nut Acorn – Hex Locking SS |
| | 685358-01 | Quarter turn fastener, Stone guards |
| | 685359 | Rubber Receptacle |
| | 685362 | Retainer, Split Ring, Stone Guard |
| | 204205 | Plexiglass RS/CS, Solar guard |
| | 204206 | Plexiglass Center, Solar guard |
| | 365334 | Tape-Sealfoam 7#W/Psa One Side (Sold in A 100 Ft Roll) |
| | 360417 | Seal, Closed cell w/adhesive back |

# 2022 BASECAMP
## INTERIOR SHELL

### Interior Skin

| | |
|---|---|
| 114879-06 | Alum. Sheet, .04 x 33” x 152.5” |
| 114880-05 | Alum. sheet, .04 x 51 x 173.50” (Sold in A 62 Sf Sheet) |
| 114880-06 | Alum. sheet, .04 x 51 x 152.5” (Sold in A 54 Sf Sheet) |
| 203740 | Insulation-Fiber 2.25 x 48” x 60’ (Sold in A 240 Sf Roll) |
| 203594-04 | Trim, Floor, black |

### Main Door Threshold

| | |
|---|---|
| 115565 | Extrusion, Main door threshold, 16’ |
| 382290-01 | End cap, Threshold, 16’ |
| 382290-02 | End cap, Threshold, 16’ |

# 2022 BASECAMP
## CHASSIS

### Axles, BC16

| | |
|---|---|
| 410980-28 | Axle 3150# Nev-R Adjust |
| 410980-102 | 12" LH Nev-R Adjust Brake Assembly |
| 410980-103 | 12" RH Nev-R Adjust Brake Assembly |

### Axles, BC20

| | |
|---|---|
| 410980-27 | Axle 4300 Dexter |
| 410980-102 | 12" LH Nev-R Adjust Brake Assembly |
| 410980-103 | 12" RH Nev-R Adjust Brake Assembly |

### Tires and Wheels, BC16

| | |
|---|---|
| 411159 | Tire/Wheel Assy BC 15" BC 16 |
| 400844-03 | Cover, Hub dust, 3.75”, Stainless Steel |
| 400923 | Lug nut, 1/2” |
| 455635 | Lug Nut Wrench - Kt #35636 Stow and Go 4 Way |

### Tires and Wheels, BC16X

| | |
|---|---|
| 411160 | Tire/Wheel Assy |
| 411160-01 | Tire only 235/75R15 |
| 411160-02 | Wheel/rim only, 15” |
| 400923 | Lug nut, 1/2” |
| 400844-03 | Cover, Hub dust, 3.75”, Stainless Steel |
| 455635 | Lug Nut Wrench - Kt #35636 Stow and Go 4 Way |

### Tires and Wheels, BC20

| | |
|---|---|
| 411150 | Tire/Wheel Assy 6 x 5.5” |
| 400844-03 | Cover, Hub dust, 3.75”, Stainless Steel |
| 400923 | Lug Nut-1/2 x 20 Chrome, 13/16 HEX McGard |
| 455635 | Lug Nut Wrench - Kt #35636 Stow and Go 4 Way |

### Tires and Wheels, BC20X

| | |
|---|---|
| 411151 | Tire/Wheel Assy 6 x 5.5" BC20X |
| 400844-03 | Cover, Hub dust, 3.75”, Stainless Steel |
| 400923 | Lug Nut-1/2 x 20 Chrome, 13/16 HEX McGard |
| 455635 | Lug Nut Wrench - Kt #35636 Stow and Go 4 Way |

### X-Package Lift Kit

| | |
|---|---|
| 455782 | Frame Spacer Kit |

# 2022 BASECAMP
## CHASSIS

### Spare Tire Carrier, BC16

| | |
|---|---|
| 410843-02 | Tire/Wheel Assembly Spare |
| 455172 | Spare tire winch |
| 115821 | Bracket, Spare tire |
| 455635 | Lug Nut Wrench - Kt #35636 Stow and Go 4 Way |

### Spare Tire Carrier, BC20

| | |
|---|---|
| 411152 | Spare Tire/Wheel Assy 6 x 5.5, 20’ Standard |
| 411153 | Spare Tire/Wheel Assy 6 x 5.5, x Package |
| 455764 | Spare Tire Carrier – 20 |
| 455635 | Lug Nut Wrench - Kt #35636 Stow and Go 4 Way |

### Step

| | |
|---|---|
| 400962 | Step, Main door, Steel, 24" |
| 401074 | Step-Steel Dbl 26" Wide, BC20X |

### Hose Carrier

| | |
|---|---|
| 602619-02 | E-Z hose carrier, 64”, Black |
| 104704-01 | Shim, 3 x 3 |
| 115721 | Spacer, Hose bracket |

### Hitch Jack

| | |
|---|---|
| 455845 | Hitch jack, Manual |
| 401022 | Hitch jack foot pad |
| 401022-01 | Extension, Foot pad Silver, X-Package |

### Stabilizing Jacks, BC16

| | |
|---|---|
| 401042-01 | Stabilizer jack, 22” |
| 401027-0300 | Hardware Kit (Includes 2 Foots Pads & Hardware) |
| 401027-03 | Foot Pad |
| 401027-02 | Crank-Stabilizer C-Jack |
| 382412 | Spacer, Stabilizer jack |

### Stabilizing Jacks, BC20

| | |
|---|---|
| 401102 | Assy, Stabilizer Jack, 28" |
| 401102-01 | Stabilizer Jack, 28" |
| 401027-03 | Foot Pad |

# 2022 BASECAMP
## CHASSIS

### A-Frame

| | |
|---|---|
| 410612 | Safety chain w/hook |
| 455653 | Demco 2 5/16 12.5 K Coupler |
| 455654 | Adjustable Coupler Lock |

# 2022 BASECAMP
## DECALS, EXTERIOR TRIM

### Decals, Logos, and Nameplates

| | |
|---|---|
| 386294 | Nameplate, “BASECAMP”, Orange/Ivory |
| 386356 | Nameplate, “Basecamp X” |
| 386255-01 | Curved badge, “AIRSTREAM”, Black Chrome |
| 386255-02 | Straight badge, “AIRSTREAM”, Black Chrome |
| 115809 | LP logo wrap |

### Keder Rail

| | |
|---|---|
| 115686 | Extrusion, Keder rail |
| 203914 | Insert, 1”, Black |
| 320192 | Screw-Flt Head #8 x 3/4" SS For Metal |

### Reflectors

| | |
|---|---|
| 512967 | Reflector, Yellow |
| 512968 | Reflector, Red |

# 2022 BASECAMP
## DOORS, WINDOWS

Main Door, BC16

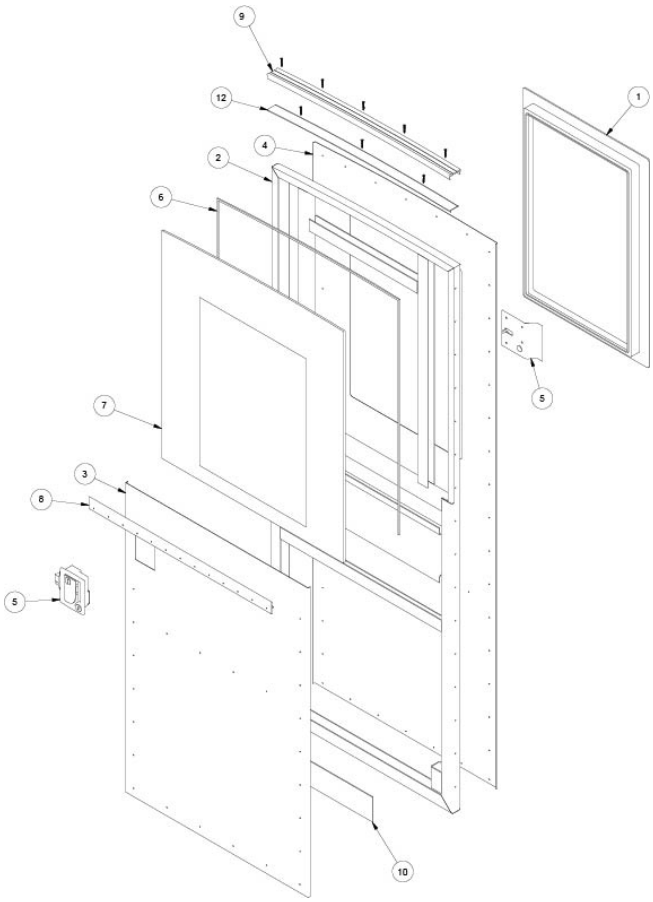


| | | |
|---|---|---|
| | 968440 | Main Door |
| 1. | 203859 | Window trim ring |
| 2. | 968439 | Door frame assembly |
| 3. | 115756 | Door skin, Front |
| 4. | 115757 | Door skin, Back |
| 5. | 382311 | Main door latch w/deadbolt, Black |
| 6. | 365367 | Flat gasket |
| 7. | 372282 | Door window |
| 8. | 115848 | Main door closeout trim |
| 9. | 204166 | Door header trim |
| 10. | 116032 | Door Stay, Aluminum Support |
| 11. | 116079-01 | Aluminum extrusion |
| | 0101-0025 | Door window extrusion |
| | 968437 | Door jamb assembly |
| | 455371 | Pocket strike |
| | 382351 | Stowaway Retractable Screen Door |
| | 382470 | Trim-lok, Dual gripper |

# 2022 BASECAMP
## DOORS, WINDOWS

### Main Door, BC20

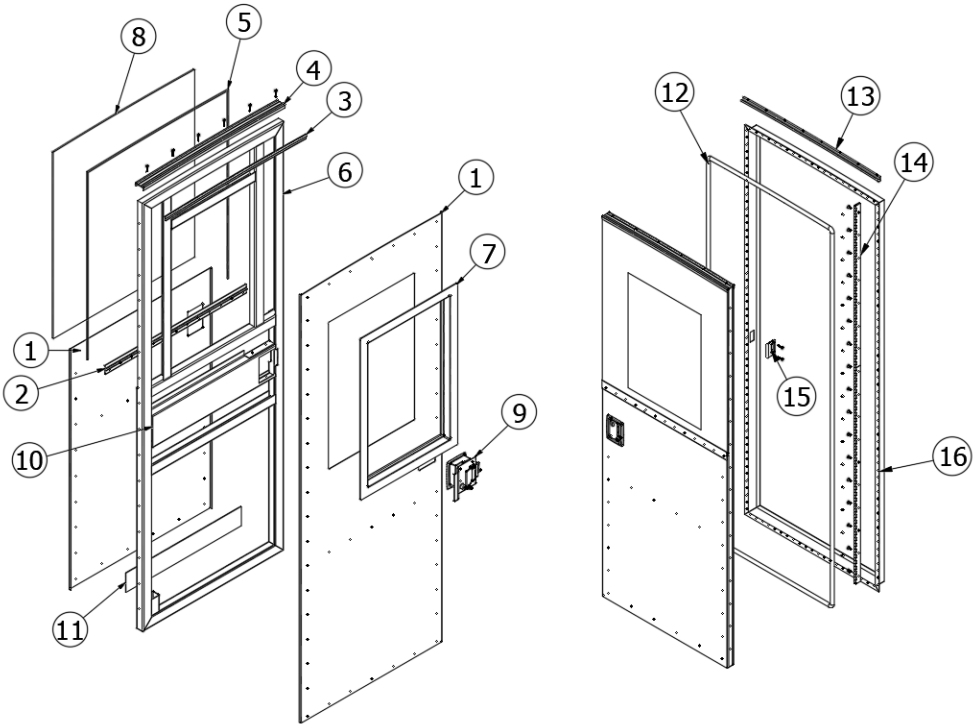


| | | |
|---|---|---|
| | 969330 | Main Entry Door Assembly BC 20 |
| 1. | 114879-05 | Alum. Sheet .4 x 33 x 173.5" (Sold in A 38 Sf Sheet) |
| 2. | 0101-0025 | Ext 6158 125" Bonded Sash |
| 3. | 114070 | Extrusion, J Trim, Mill Finish (Sold in A 12 Ft. Piece) |
| 4. | 204166 | Door Header Trim |
| 5. | 365367 | Tape- Foam Automotive 18' RL |
| 6. | 969331 | Frame Assy - Main Door BC 20 |
| 7. | 203859 | Trim Ring- Window Blk 18 x 25.5 |
| 8. | 372308 | Window - Door BC 20 |
| 9. | 382311 | Latch-Main Dr W/Deadbolt BLK #0020155 |
| 10. | 923316 | Hat Section Assy BC |
| 11. | 116032 | Door Stay - Aluminum Support |
| 12. | 365458 | Rubber Seal, W/PSA 5/8 x 3/8 |
| 13. | 0106-0015 | Extr.5516 95" Eyebrow Trl Door |
| 14. | 382451 | Piano hinge, Painted at top, 2” open |
| 15. | 455371 | Strike-Main Door BC |
| 16. | 923513 | Door Jamb Assy BC 20 |
| 17. | 382470 | Trim Lok-Dual Gripper #0011122 |
| | 365222-02 | Tape Dbl Coated .08 x 1/2" (Sold in A 200 Ft Roll) |
| | 195467-08 | Primer Lord's Glue AP-134 GAL. |
| | 195467-18 | Glue-Lords Black 400 ML CART. |
| | 382738 | Screen Door, Stowaway retractable |

## Compartment Door

| | |
|---|---|
| 109867-03 | Compartment Door Install |
| 114496-03 | Door, Utility compartment |
| 340023-01 | Catch and strike, Zinc |
| 380988 | Hinge, Continuous |
| 365232 | Seal, Baggage door |

# 2022 BASECAMP
## DOORS, WINDOWS

### Rear Door

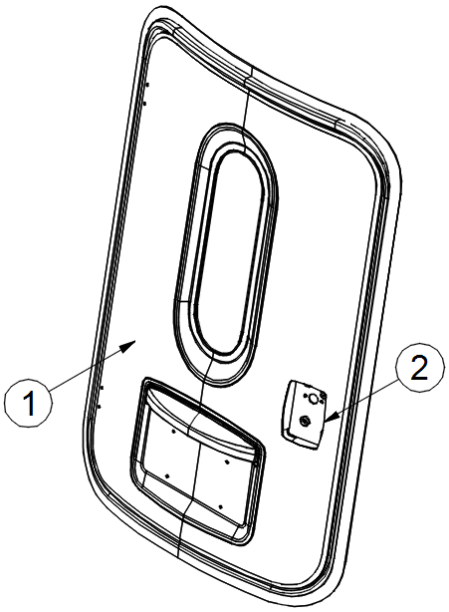


| | | |
|---|---|---|
| | 968465 | Rear Door |
| 1. | 968461 | Fiberglass Rear Door |
| 2. | 382312 | Rear door latch |
| | 382065 | Hinge |
| | 115781 | Rear door cam |
| | 0230016 | Snap-in plastic bushing, 5/8” |
| | 381423-04 | Strike plate |
| | 203873 | Rear door closeout |
| | 115783 | Rear door latch plate |
| | 372280 | Window, Rear cargo door |
| | 802123 | Whiteboard, Rear door |
| | 382415 | Tapered handle |
| | 365232 | Baggage door seal |
| | 360382 | Trim seal, 3/16” |
| | 381665 | Gasket, D-seal |
| | 455250 | Strike plate w/box |
| | 115869 | Drip rail, Rear door |
| | 512472 | Kit, Door jamb contact |

### Rear Door Netting

| | |
|---|---|
| 704276 | Kit, Rear door netting |
| 704276-01 | Strap and mounting bracket for door, 12” |
| 704276-02 | Stretch net w/bungee & Brass clips, 7.5” x 7” |
| 704276-03 | Stretch net w/bungee & Brass clips, 7.5” x 11” |

## Windows, BC16

| | |
|---|---|
| 371453 | Window assembly, Front center |
| 371452 | Window assembly, RS front |
| 371451 | Window assembly, RS flat |
| 371459 | Window assembly, RS rear |
| 371454 | Window assembly, CS front |
| 371458 | Window assembly, CS rear |
| 372280 | Window, Rear cargo door |
| 372282 | Flat door window |

## Window Trim, BC16

| | |
|---|---|
| 203859 | Trim ring, Window |
| 203868-01 | Trim ring, Interior front |
| 203868-02 | Trim ring, Interior front center |
| 203868-03 | Trim ring, Interior front RS |
| 203868-04 | Trim ring, Interior rear CS |
| 203868-05 | Trim ring, Interior rear RS |
| 203594-04 | Ceiling trim, Black |

## Window Pillar Covers, BC16

| | |
|---|---|
| 203879-01 | Pillar cover, CS rear |
| 203879-02 | Pillar cover, CS front right |
| 203879-03 | Pillar cover, CS front center |
| 203879-04 | Pillar cover, RS front center |
| 203879-05 | Pillar cover, RS front left |
| 203879-06 | Pillar cover, RS rear |

# 2022 BASECAMP
## DOORS, WINDOWS

### Windows, BC20

| | |
|---|---|
| 371475 | Window Assy, Front RS |
| 371476 | Window Assy, Front CS |
| 371477 | Window Assy, Front center |
| 371478 | Window Assy, RS flat |
| 371479 | Window Assy, RS curved |
| 371480 | Window Assy, CS curved |
| 371458 | Window Assy, CS Rear |
| 371459 | Window Assy, RS rear |
| 372282 | Flat door window |
| 372280 | Window, Rear cargo door |

### Window Trim, BC20

| | |
|---|---|
| 203859-01 | Window Trim Ring W/O Flange |
| 203868-04 | Trim Ring- CS Rear |
| 204178 | Trim Ring - Interior Frt CS BC |
| 204179 | Trim Ring-Interior Frt Ctr BC2 |
| 204180 | Trim Ring Int Frt RS BC20 |
| 204181 | Trim Ring - Interior Rear RS |
| 204183 | Trim Ring-Int Middle CS BC 20 |

### Window Pillar Covers, BC20

| | |
|---|---|
| 204184-01 | Pillar Cover – RS Rear |
| 204184-02 | Pillar Cover – RS Rear Middle |
| 204184-03 | Pillar Cover – RS Front Middle |
| 204184-04 | Pillar Cover – RS Front |
| 204184-05 | Pillar Cover – CS Front |
| 204184-06 | Pillar Cover – CS Front Middle |
| 204184-07 | Pillar Cover – CS Rear Middle |
| 204184-08 | Pillar Cover – CS Rear |
| 365302 | Tape ½” 3M VHB Tape |

### Window Coverings, BC20

| | |
|---|---|
| 704275-05 | Covering-Window Rear CS BC |
| 704275-06 | Covering-Window Headknocker BC |
| 704324-01 | Shade-Pull Dr 14.50 x 22.5 Black Skylight |
| 704343 | Window Cover - Rear Door BC |
| 704759 | Window Covering - Front RS |
| 704760 | Window Covering-Frt Center BC 20 |
| 704761 | Window Covering-Frt CS BC 20 |
| 704762 | Window Covering-CS Middle BC20 |
| 704763 | Window Covering-Rear RS BC 20 |

| | |
|---|---|
| 382438 | Seal-Dual Durometer BC |



## Window Stone Guards, BC16

| | |
|---|---|
| 923379 | Window Stone Guard - RS Solar Basecamp X |
| 923378 | Window Stone Guard -CS Solar Basecamp X |
| 923380 | Window Stone Guard-Center Solar Basecamp X |
| 382618 | Slip Joint Hinge |
| 685361-02 | Bracket for Rubber Receptacle |
| 685361-03 | Bracket for Rubber Receptacle |
| 685359 | Rubber Receptacle |
| 685358-01 | Turn Fast Stud |
| 685362 | Retainer Split Ring |
| 685354 | Front Window Key |

## Window Stone Guards, BC20

| | |
|---|---|
| 923526 | Solar Guard Assy - Roadside |
| 923527 | Solar Guard Assy-Center BC 20 |
| 923528 | Solar Guard Assy - CS BC 20 |
| 382618 | Slip Joint Hinge |
| 685361-02 | Bracket for Rubber Receptacle |
| 685361-03 | Bracket for Rubber Receptacle |
| 685359 | Rubber Receptacle |
| 685358-01 | Turn Fast Stud |
| 685362 | Retainer Split Ring |
| 685354 | Front Window Key |

# 2022 BASECAMP
## WINDOW SHADES

### Window Shades, BC16

| | |
|---|---|
| 704275-01 | Window cover, Front RS |
| 704275-02 | Window cover, Front center |
| 704275-03 | Window cover, Front CS |
| 704275-04 | Window cover, Rear RS |
| 704275-05 | Window cover, Rear CS |
| 704275-06 | Window cover, Headknocker |
| 704343 | Window cover, Rear door |
| 704324-01 | Shade, Flat door, 14.75 x 22.5, Black |

### Window Shades, BC20

| | |
|---|---|
| 704759 | Window Covering - Front RS |
| 704760 | Window Covering-Frt Center BC 20 |
| 704761 | Window Covering-Frt CS BC 20 |
| 704762 | Window Covering-CS Middle BC20 |
| 704763 | Window Covering-Rear RS BC 20 |
| 704275-05 | Window cover, Rear CS |
| 704275-06 | Window cover, Headknocker |
| 704343 | Window cover, Rear door |
| 704324-01 | Shade, Flat door, 14.75 x 22.5, Black |

### Window Shade Hardware

| | |
|---|---|
| 704325-01 | Zipper sliders, Black |
| 704375 | Cover, Window latch |
| 700005 | Fastener, Cap |
| 700006 | Fastener socket |
| 340030 | Fastener stud, Nickel Plated |
| 700618 | Black hoop, 1” |
| 700617-01 | Black hook, 1” |
| 704360 | Black nylon tape, 1” |
| 700020 | Pile, Velcro |
| 700021 | Hook, Velcro, White |
| 703703 | Zipper |
| 704928-01 | Black bungee, 3/16”, 21” |
| 704928-02 | Black bungee, 3/16”, 25” |
| 704928-03 | Black bungee, 3/16”, 28” |

# 2022 BASECAMP
## ELECTRICAL, 110 VOLT

### Shore Line Cord

| | |
|---|---|
| 513809 | Smart Plug 30A RV Cordset |
| 513797 | Inlet-30a Smart plug, Grey |

### Power Center

| | |
|---|---|
| 513802 | Power Center 45w Conv Progressive Dynamics |

### Breakers

| | |
|---|---|
| 510564-03 | Breaker, Bryant, 15-15 Amp |
| 510564-05 | Breaker, Bryant, 30-20 Amp |
| 510564-07 | Breaker- Bryant 15 GFI |
| 510564-09 | Breaker, Bryant 15A SPST |

### Junction Boxes

| | |
|---|---|
| 513867 | Junction box, 7-way |
| 512025-01 | Junction Device- White |

### Receptacles and USB Ports

| | |
|---|---|
| 511814-01 | Receptacle, Duplex, Self-contained, Gray |
| 511814-02 | Decorative wall plate, Gray |
| 512999-06 | Receptacle, 20 Amp, Self-contained, Black |
| 512481-01 | Receptacle, 20 Amp, White |
| 500563-04 | Decorative wall plate w/screws, White |
| 512986 | Pop-up outlet |
| 513331 | USB power inlet, Black |
| 513753 | Socket-12V Black W/Black Plate |
| 512642-06 | Receptacle 15A Single Self Cont Blk |
| 511815-02 | Plate-Decorator 1 Gang BLK |
| 511023 | Tester Circuit Analyzer 3 Wire |

# 2022 BASECAMP
## ELECTRICAL, 12 VOLT

### Battery and Battery Box

| | |
|---|---|
| 511828 | Battery, 12V deep cycle, AGM (when solar equipped) |
| 455055 | Battery box, 16’ |
| 204182 | Battery box, 20’ |
| 204182-01 | Battery Box-Dbl Side by Side C |
| 204182-03 | Hose Mount Plate Blk BC 20 |
| 204182-04 | Flexible Hose PVC 1.75" I.D. B |
| 602192 | Vent hose |
| 386318 | Folding handle |
| 386319 | Draw latch, Over center |
| 203638-01 | Cone vent, Battery box vent |
| 203638-02 | Grill, Battery box vent |
| 382552 | Gasket, Battery box lid |
| 512049-04 | Cable, Jumper, 6 gauge, 9.75”, Red |
| 512049-05 | Cable, Jumper, 6 gauge, 9.75”, Black |
| 500836-03 | Cable, Jumper, 6 gauge, 20”, Red |
| 500837-02 | Cable, Jumper, 6 gauge, 20”, Black |

### 7-Way Cable

| | |
|---|---|
| 513905 | Tow cable, 7-way, Siliconized |

### Switches

| | |
|---|---|
| 511975 | Switch, 4 gang, Black |
| 513028 | Switch, Tank heater, Black w/Red lit lens |
| 511781 | Switch Assy-Lighted 2 Gang Rocker Black |

### Battery Disconnect

| | |
|---|---|
| 510626 | Switch, Master battery disconnect |
| 510627 | Faceplate, Polished Aluminum |

### Breakaway Switch

| | |
|---|---|
| 514012 | Breakaway switch |
| 454526 | Bracket, Breakaway switch |

### Monitor System, BC16

| | |
|---|---|
| 513168-01 | Flush mount monitor panel only |
| 513362-01 | Sender pad, 6” |
| 512951-02 | Harness, Seelevel pad |
| 365493 | Sensor pad protective gasket |

## Monitor System, BC20

| | |
|---|---|
| 512566-01 | Flush mount monitor panel only |
| 512566-02 | Sender pad |
| 512951-01 | Harness, Seelevel pad |
| 365493 | Sensor pad protective gasket |

# 2022 BASECAMP
## ELECTRICAL, 12 VOLT

### Breakers

| | |
|---|---|
| 510947-20 | Breaker, 12V DC, Type II |
| 510947-30 | Breaker, 12V DC, Type II |

### Fuses

| | |
|---|---|
| 512660-50 | Terminal fuse, 50 amp, Red |
| 512661 | Fuse block, 1 terminal stud |
| 500773-30 | Fuse, ATC, 12 VDC, 30 AMP |
| 500773-01 | Fuse, ATC, 12 VDC, 1 AMP |
| 500773-15 | Fuse, ATC, 12 VDC, 15 amp |
| 500773-20 | Fuse, ATC, 12 VDC, 20 amp |

### Solar Panel System

| | |
|---|---|
| 513047-01 | Solar panel, 80 watt, Zamp |
| 513047-02 | Solar panel mounting feet, Zamp |
| 513060 | Mounting brackets, Solar panel |
| 513033 | Bracket, Portable solar panel port |
| 513475-01 | Controller MPPT 150/35 |
| 513475-08 | Display-Control Blue Solar Charge Controller |
| 513586 | Cap-Solar Triple Port |

### Interior Lights

| | |
|---|---|
| 513961 | LED light, Shower |
| 512987 | LED spotlight w/frosted lens |
| 512803 | Light-reading w/sw & frosted light |
| 513752 | Light, Push Lens |

### Exterior Lights

| | |
|---|---|
| 512793 | LED porch light, Chrome |
| 512533 | Auxiliary light, LED, Surface mount |
| 513025 | LED clearance marker, Yellow |
| 513026 | LED clearance marker, Red |
| 512964 | LED clearance marker, Yellow |
| 512965 | LED clearance marker, Red |
| 512971 | Light kit, red identification |
| 512981 | LED license plate light |

# 2022 BASECAMP
## ELECTRICAL, 12 VOLT

### Taillights

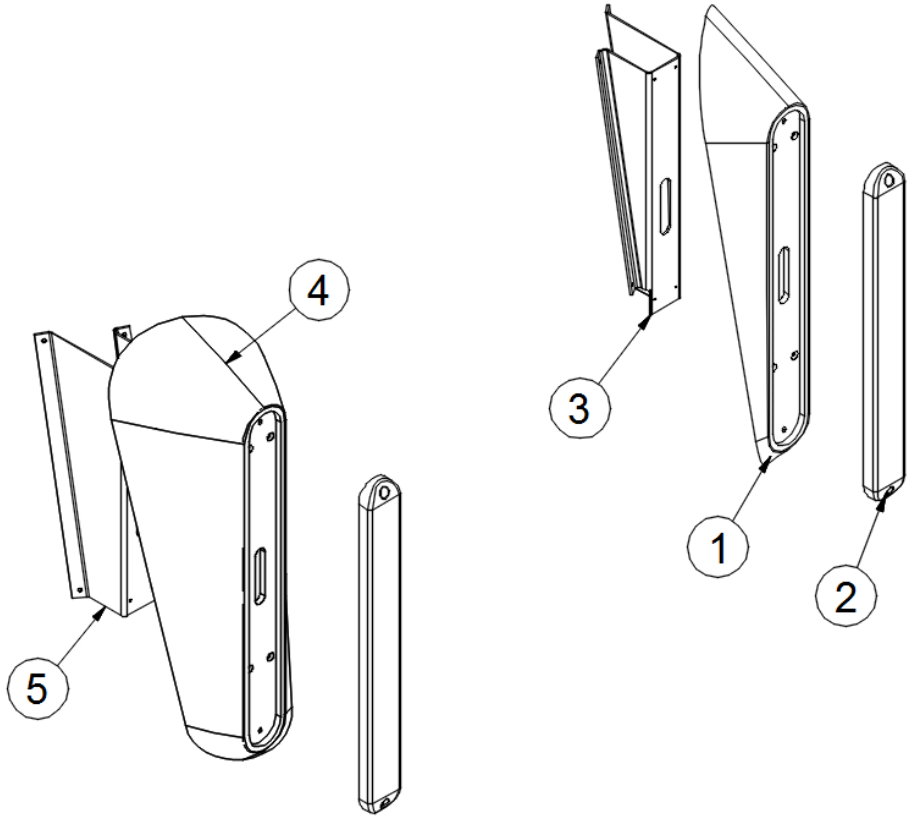


| | |
|---|---|
| 112294 | Taillight Install |
| 1. 115670-01 | Casting, CS taillight |
| 2. 512961 | Light, Stop/turn/tail, Red |
| 3. 115678-01 | Bracket, CS taillight |
| 4. 115670-02 | Casting, RS taillight |
| 5. 115678-02 | Bracket, RS taillight |

## Airstream Connected

| | |
|---|---|
| 513759-01 | Kit-White Prewire Antenna WIFI |
| 513516 | Router-Pepwave |
| 513777 | Assy-White Roof Cap Wifi Prewire |
| 382698 | Kit-Gasket WIFI Pre-Wire |

Contains: OEM Antenna (Short Leads, labeled at both ends)
Mounting Kit (Bracket, Silicon Plug, Mounting Bolts, Spigot)
LTE-A Router
Smart RV WIFI Skin Antenna Gasket (2)
Smart RV WIFI Skin Antenna Gasket (1)

# 2022 BASECAMP
## FLOOR COVERINGS

### Floor Coverings

| | |
|---|---|
| 704547 | Flooring, Vinyl, Beau Linea |
| 203594-04 | Floor trim, Black |
| 365376 | Tape masking w/adhesive, 3” wide |
| 360407 | Microlite Body Filler |
| 203727 | Foil, Single bubble flex |
| 802098 | Front floor panel |
| 802099 | Mid floor panel |
| 802100 | Rear floor panel |
| 802101 | Rear floor panel, Rear |
| 802102 | Rear floor panel, RS |
| 802103 | Rear floor panel, CS |
| 704942 | Entry mat, Airstream logo |

# 2022 BASECAMP
## FURNITURE, STORAGE

### Overhead Storage Nets

| | |
|---|---|
| 704271 | Net-Overhead Storage Kit, 16’ |
| 704271-05 | Net-Overhead Storage Kit, 20’ |
| 704271-01 | Overhead storage net, RS front, 16’ |
| 704271-02 | Overhead storage net, RS rear |
| 704271-03 | Overhead storage net, Front |
| 704271-04 | Overhead storage net, CS, 16’ |
| 704282-01 | Straps for overhead rail support, 20’ |

### Overhead Bars

| | |
|---|---|
| 115754-02 | Overhead bar, Front RS, Red, 16’ |
| 115754-03 | Overhead bar, Front RS, Yellow, 16’ |
| 115754-04 | Overhead bar, Front RS, Orange, 16’ |
| 115755-02 | Overhead bar, Rear RS, Red, 16’, 20’ |
| 115755-03 | Overhead bar, Rear RS, Yellow, 16’, 20’ |
| 115755-04 | Overhead bar, Rear RS, Orange, 16’, 20’ |
| 115767-02 | Overhead bar, Front center, Red, 16’, 20’ |
| 115767-03 | Overhead bar, Front center, Yellow, 16’, 20’ |
| 115767-04 | Overhead bar, Front center, Orange, 16’, 20’ |
| 115768-02 | Overhead bar, CS rear, Red, 16’ |
| 115768-03 | Overhead bar, CS rear, Yellow, 16’ |
| 115768-04 | Overhead bar, CS rear, Orange, 16’ |
| 116315-03 | Overhead Bar, Galley, Yellow, 20’ |
| 116315-04 | Overhead Bar, Galley, Orange, 20’ |

### Storage Bins

| | |
|---|---|
| 455349 | Bin, Plumbing storage |

# 2022 BASECAMP
## FURNITURE, STORAGE

### Rear Storage Compartment, Floor

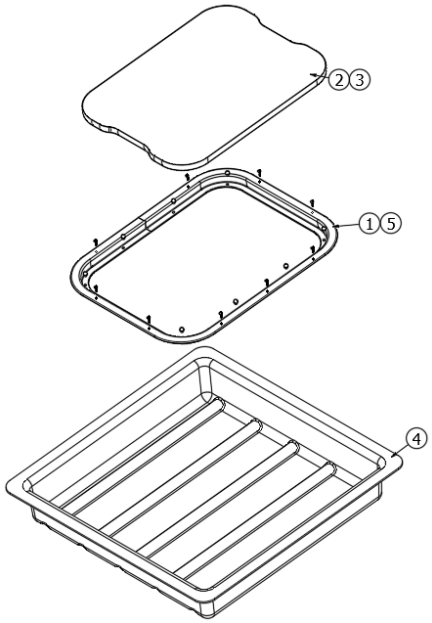


| | | |
|---|---|---|
| 1. | 116214 | Extrusion, Bath Door |
| 2. | 113312&000218HC | Pre laminate, .75 x 23.50 x 17.50 |
| 3. | 203440 | T Molding-Black Embossed .8125 |
| 4. | 204177 | Box-Rear Floor Storage BC 20 |
| 5. | 382711 | Bumper Rubber 7/16" Dia |
| | 386435 | Label-Max Weight |

### Plumbing Storage

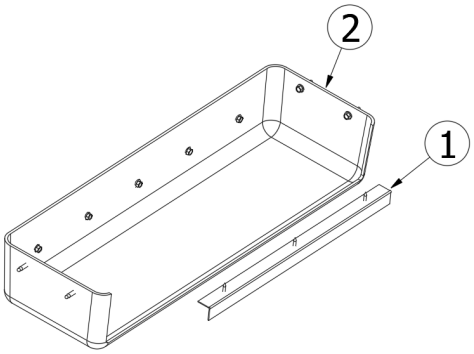


| | | |
|---|---|---|
| 1. | 114812 | Aluminum Angle 1 x 1 x 18 |
| 2. | 204186 | Plumbing Storage Bin |

# 2022 BASECAMP
## FURNITURE, LAVATORY

Bath Module, BC16

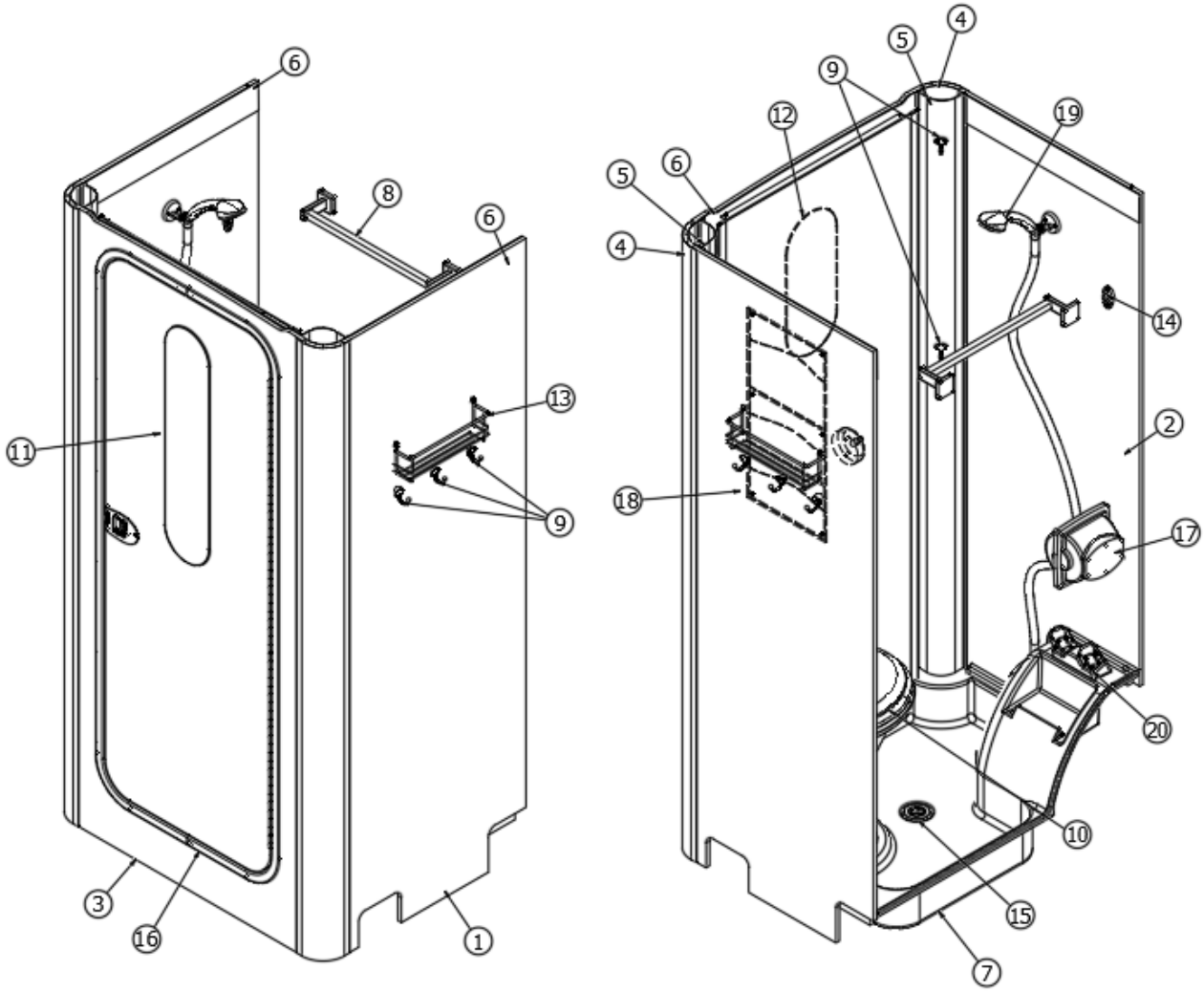


Parts Listed on Next Page

# 2022 BASECAMP
## FURNITURE, LAVATORY

### Bath Module, BC16

| | | |
|---|---|---|
| | 113116 | Wet Bath Install |
| 1. | 113116&000112BJ | Pre laminate, .5 x 25.5 x 74.4 |
| 2. | 113116&000212BJ | Pre laminate, .05 x 25.41 x 74.76 |
| 3. | 113116&000312BJ | Pre laminate, .05 x 32 x 75.05 |
| 4. | 115682 | Extrusion-3"Rad Corner .5 PNL 90" |
| 5. | 115683 | Extrusion-2"Rad Inner Corner BC |
| 6. | 114880-06 | Alum, sheet, .4 x 51 x 152.5 |
| 7. | 203829 | Shower Pan- Basecamp |
| 8. | 602284 | Towel Bar-18" SS Polished 5518 |
| 9. | 381834 | Hook- Coat Aluminum #1760A1 |
| 10. | 690621-BOX | Toilet-China White, Single Box |
| 11. | 371455 | Mirror - Bathroom Radius 6.25 x 28.375 |
| 12. | 371456 | Mirror Bath Int of Door Radius 7.125 x 17.187 |
| 13. | 382052 | Spice Rack-Chrome BC/SP |
| 14. | 382063 | Clothesline-Retractable #Dry-01101 |
| 15. | 600594-02 | Drain, Shower with strainer |
| 16. | 969166 | Assembly, Bath Door |
| 17. | 602175 | Holder-Dryroll Toilet Roll White |
| 18. | 704272 | Caddy-Bathroom Grey 23x11 |
| 19. | 601358 | Shower Hdw Unit, Chrome (Head, Hose, Etc.) |
| 20. | 604877-01 | Shower Valve 4 Cp W/Flt Wshr |
| | 381081-04 | Snap Cap White (Screw Size #6, #8) |
| | 700822 | Velcro Hook, Circle - Adhesive |
| | 704679 | Shower Curtain-Basecamp |

# 2022 BASECAMP
## FURNITURE, LAVATORY

Bath Module, BC20

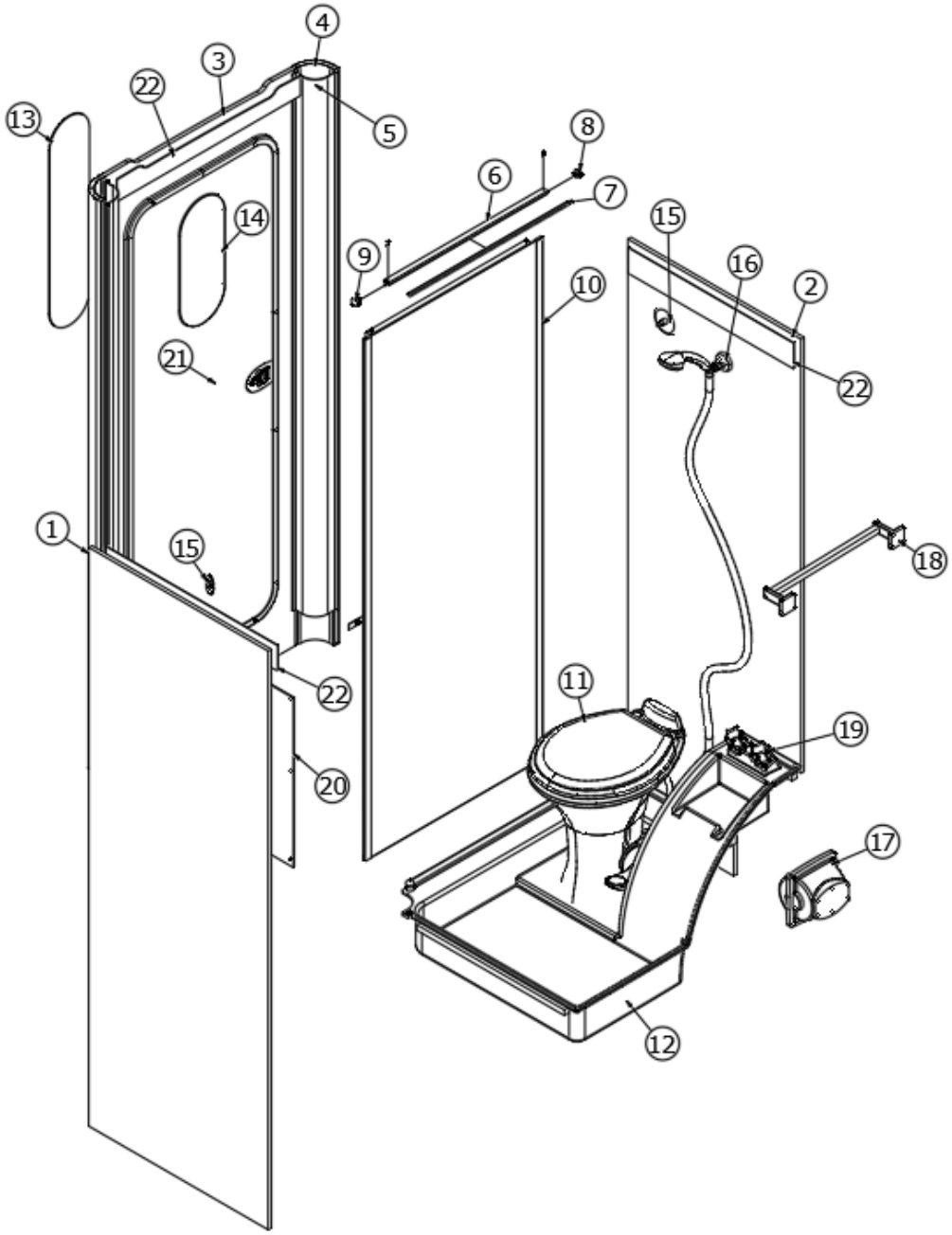


Parts Listed on Next Page

# 2022 BASECAMP
## FURNITURE, LAVATORY

### Bath Module, BC20

| | | |
|---|---|---|
| | 113268 | Bath Module Install |
| 1. | 113268&000112BJ | Pre laminate, .5 x 28.17 x 78.65 |
| 2. | 113268&000212BJ | Pre laminate, .5 x 27.2 x 78.25 |
| 3. | 113268&000312BJ | Pre laminate, .5 x 31.22 x 79 |
| 4. | 115682 | Extrusion, 3" Rad Corner .5 PNL 90" |
| 5. | 115683 | Extrusion, 2" Rad Inner Corner BC |
| 6. | 101225 | Extr. Alum Curtain Track Attach |
| 7. | 101217 | Extrusion Curtain Track |
| 8. | 200784 | Ends, Curtain Track RH White |
| 9. | 200785 | Ends, Curtain Track LH White |
| 10. | 704679 | Shower Curtain-Basecamp |
| | 703467-03 | Shower Curtain Strap |
| 11. | 690621-BOX | Toilet-China White, Single Boxed |
| 12. | 204172 | Shower Pan BC 20 |
| 13. | 371455 | Mirror - Bathroom Radius 6.25 x 28.375 |
| 14. | 371456 | Mirror Bath Int of Door Radius 7.125 x 17.187 |
| 15. | 382063 | Clothesline-Retractable |
| 16. | 601358 | Shower Hdw Unit, Chrome |
| 17. | 602175 | Holder-Dryroll Toilet Roll White |
| 18. | 602284 | Towel Bar-18" SS Polished 5518 |
| 19. | 604877-01 | Shower Valve 4 CP W/FLT WSHR |
| 20. | 704272 | Caddy-Bathroom Grey 23x11 BC |
| 21. | 969166 | Assembly, Bath Door |
| 22. | 114880-01 | Alum. sheet, .04 x 51 x coil |
| | 365411-01 | Edgebanding 1MM Steel Mesh 5/8" |
| | 365395-01 | Edgebanding 1MM 5/8" Crisp Linen |

# 2022 BASECAMP
## FURNITURE, LAVATORY

Bath Door

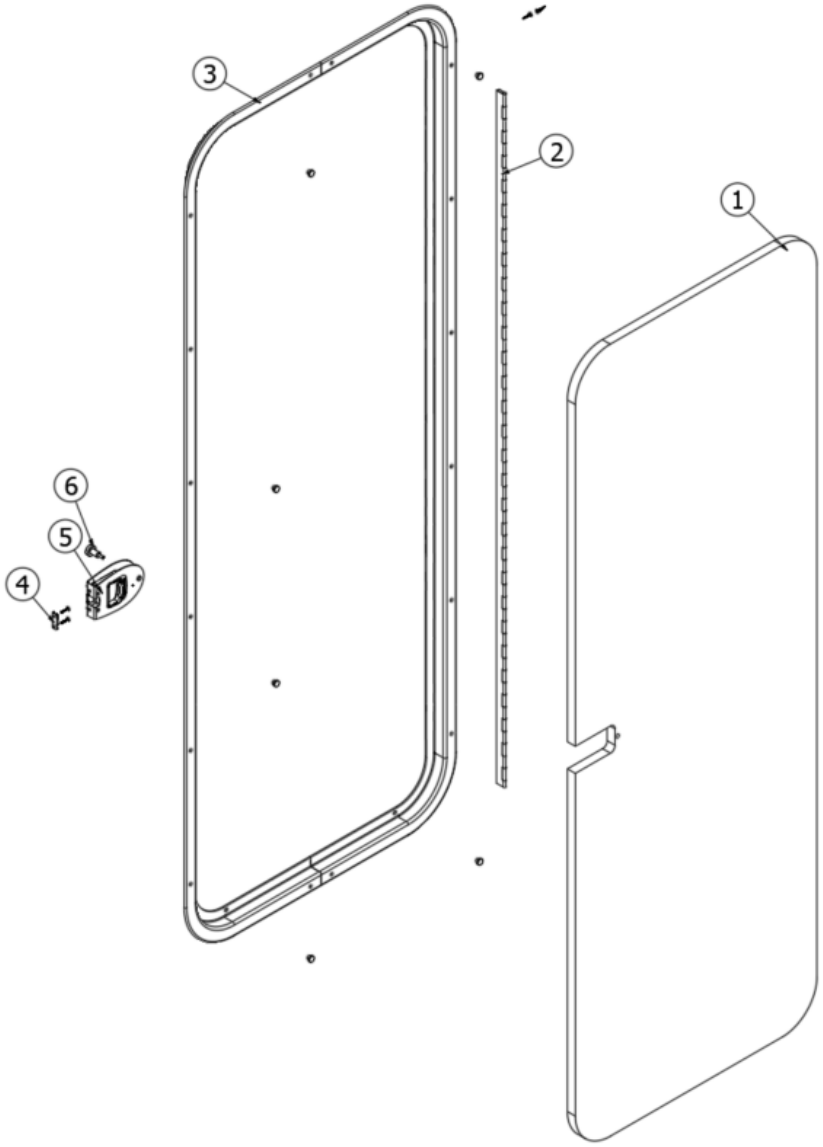


| | |
|---|---|
| 969166 | Assembly, Bath Door |
| | |
| 1. 969166&000118BJ | Pre laminate, 75 x 22.92 x 65.17 EB9-C04 |
| 2. 382731 | Hinge-Cont.-Clear Anodized 57" |
| 3. 116121 | Assy, Door Frame, Bath |
| 4. 382061 | Striker-Omni Flat Latch #MR901 |
| 5. 382055 | Latch-Privacy Omni for .75 Door |
| 6. 382744 | Knob-3/4" Round SS |
| 382711 | Bumper Rubber 7/16" Dia |
| 365464-02 | Edgebanding 2MM-15/16" Crisp Linen |
| 365465-02 | Edgebanding 2MM - 15/16" Steel Mesh |

# 2022 BASECAMP
## FURNITURE, GALLEY

Galley Top, BC16

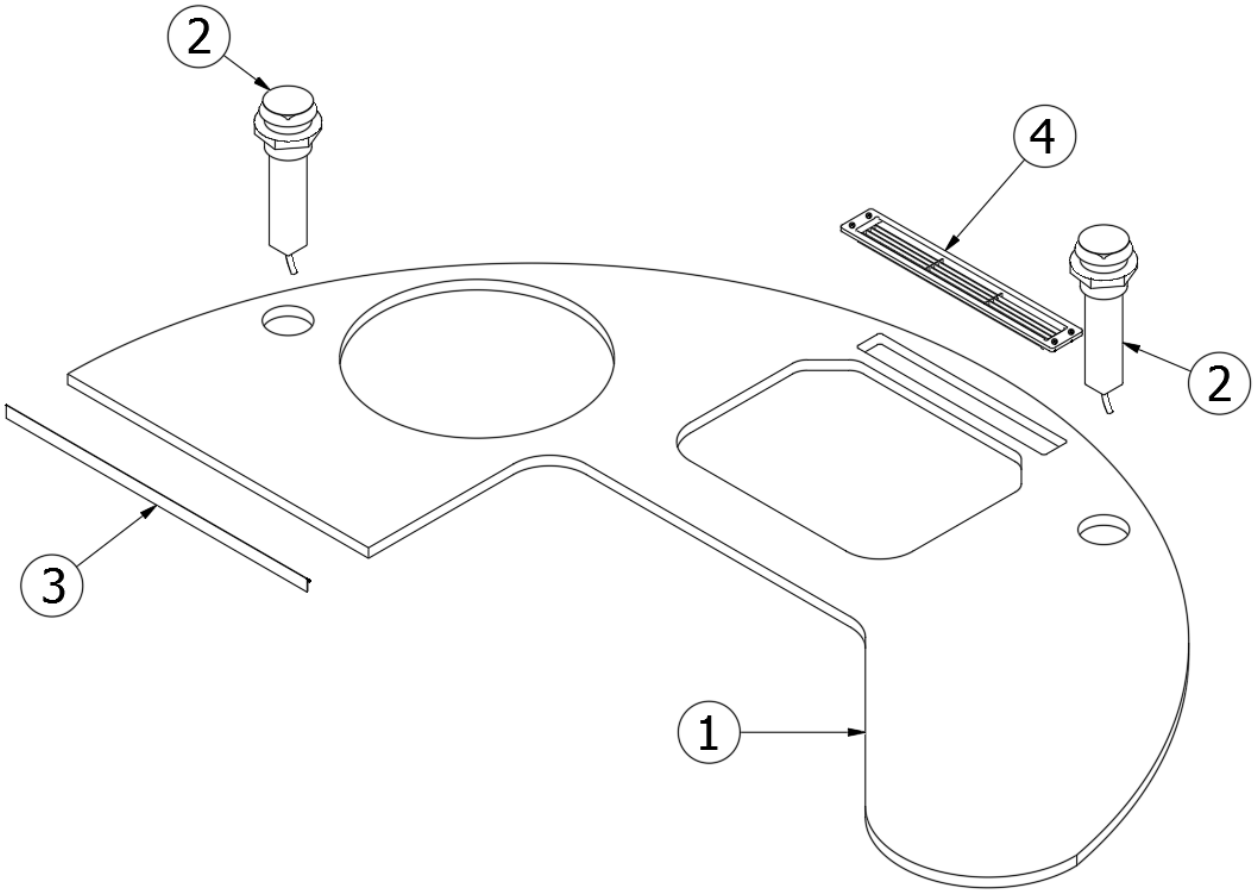


| | | |
|---|---|---|
| | 968990 | Assembly, Galley Top |
| 1. | 968990&000118JC | Pre laminate, 76.57 x 38.29 |
| 2. | 512986 | Outlet - Pop Up BC |
| 3. | 115064 | Trim-Alum Countertop |
| 4. | 386206 | Vent-Louvered 2.63 x 17.5 Blk #337211-1WM |
| | 203941-01 | Molding-5 7/8" Putty Gray (Crisp Linen) |
| | 203942-01 | Molding-T 13/16 Storm Gray (Steel Mesh) |
| | 386349 | Grommet, Black Plastic, 3.25" DIA. |

# 2022 BASECAMP
## FURNITURE, GALLEY

Galley Cabinet, RS, BC16

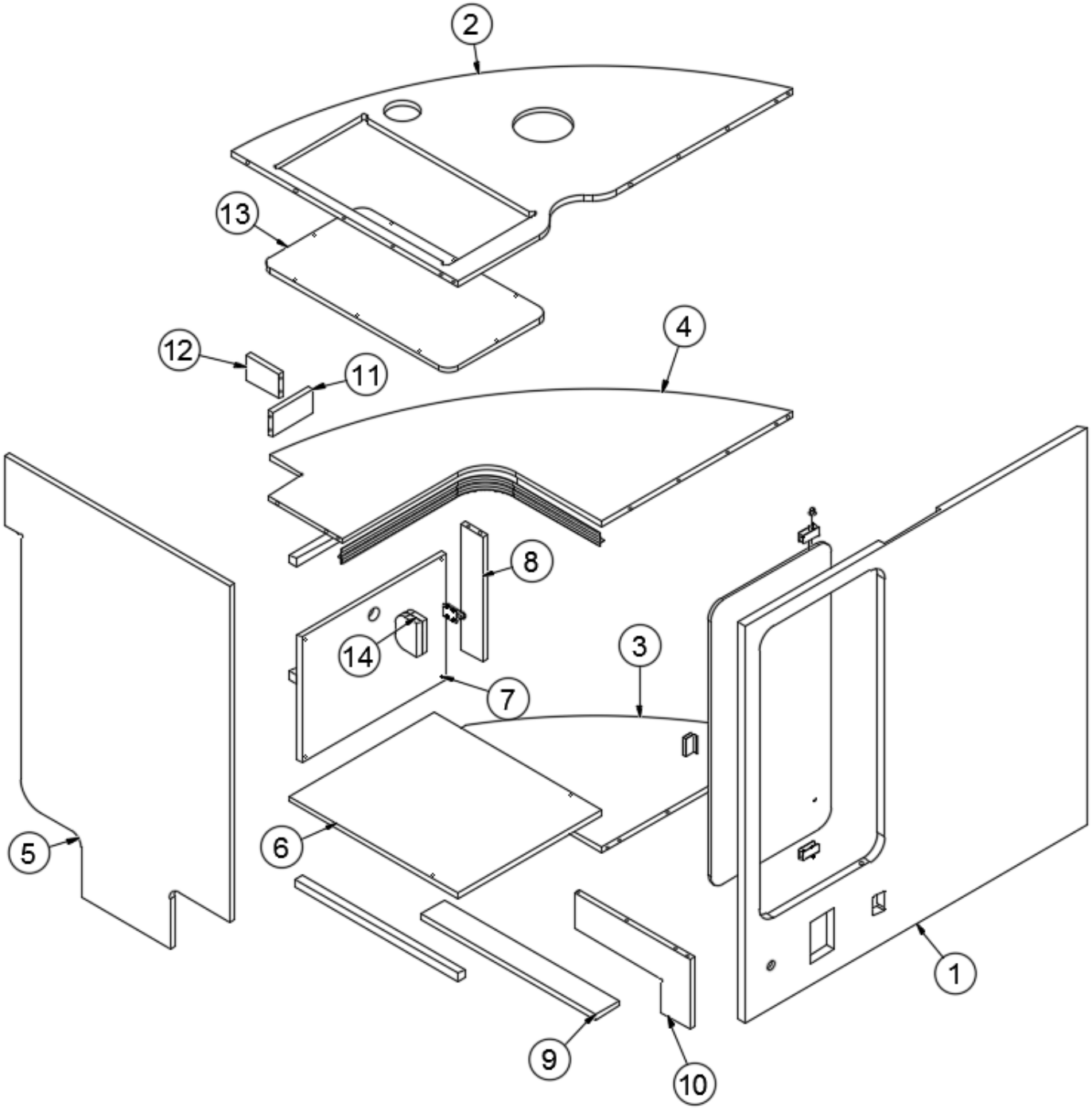


Parts Listed on Next Page

# 2022 BASECAMP
## FURNITURE, GALLEY

### Galley Cabinet, RS, BC16

| | | |
|---|---|---|
| | 968382 | RS Galley Cabinet |
| 1. | 968382&000118HC | Pre laminate, 35.63 x 35.75 |
| 2. | 968382&000212CC | Pre laminate, 23.28 x 34.83 |
| 3. | 968382&000312CC | Pre laminate, 12.13 x 19.78 |
| 4. | 968382&000412CC | Pre laminate, 23.05 x 34.83 |
| 5. | 968382&000512CC | Pre laminate, 23.25 x 35.75 |
| 6. | 968382&000612CC | Pre laminate, 15 x 17.5 |
| 7. | 968382&000712CC | Pre laminate, 15 x 11.25 |
| 8. | 968382&000812CC | Pre laminate, 2.25 x 11.25 |
| 9. | 968382&000912CC | Pre laminate, 2.5 x 18.13 |
| 10. | 968382&001012CC | Pre laminate, 6.25 x 12 |
| 11. | 968382&001112CC | Pre laminate, 2.25 x 4.25 |
| 12. | 968382&001212CC | Pre laminate, 2.25 x 3.13 |
| 13. | 968382&001312CC | Pre laminate, 10.5 x 19.5 |
| 14. | 204257 | Spacer - Door Catch |
| | 372283 | Glass door, 12.75 x 26 |
| | 381654 | Hinge, Glass door, Black |
| | 381653 | Glass catch |
| | 381707 | Glass strike/pull |
| | 968385 | Cutlery tray |
| | 365386-01 | Edgebanding- .63", Linen |
| | 203440 | T Molding-Black Embossed .8125" |

# 2022 BASECAMP
## FURNITURE, GALLEY

### Galley Cabinet, CS, BC16

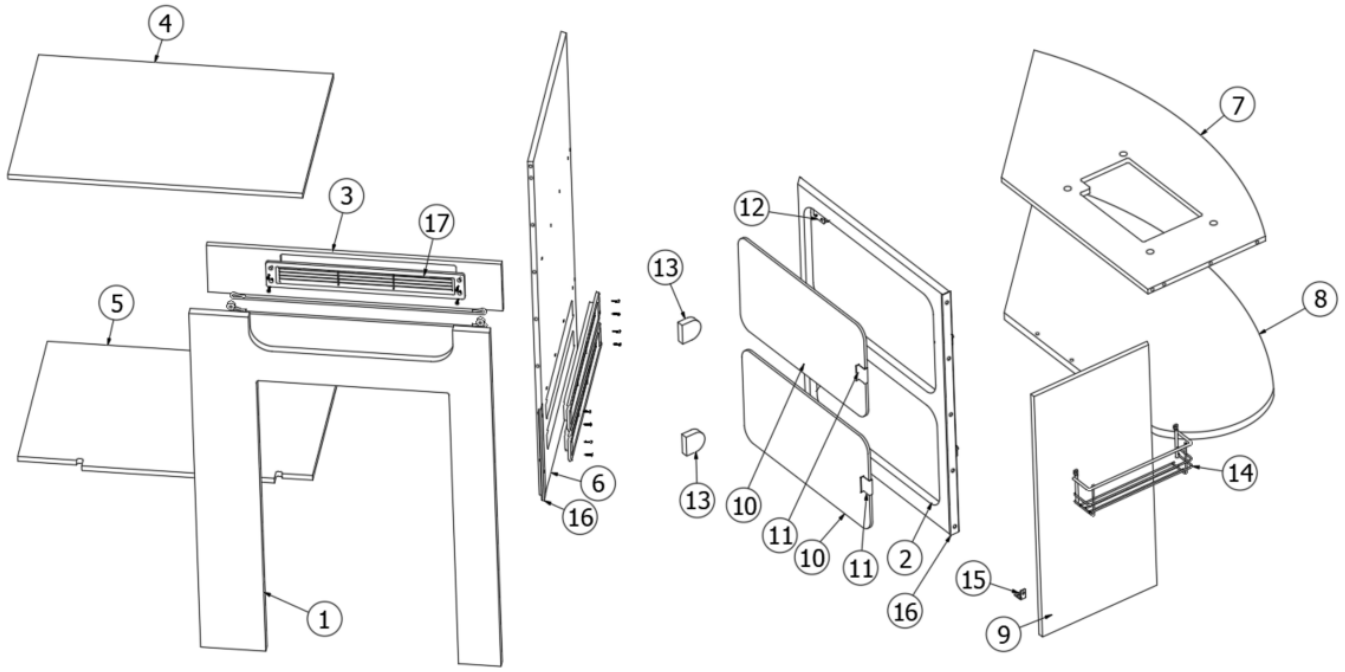


| | |
|---|---|
| 968988-01 | Assembly, Galley Cabinet CS |
| 968988-02 | Assembly, Galley Cabinet CS, Microwave Option |

| | | |
|---|---|---|
| 1. | 968988&010118HC | Pre laminate, 35.75 x 26.5 |
| 2. | 968988&010218HC | Pre laminate, 25.75 x 22 |
| 3. | 968988&010312HC | Pre laminate, 5 x 26 |
| 4. | 968988&010412CC | Pre laminate, 18 x 26 |
| 5. | 968988&010512CC | Pre laminate, 22.31 x 26 |
| 6. | 968988&010612HC | Pre laminate, 35.75 x 19.56 |
| 7. | 968988&010712CC | Pre laminate, 17.38 x 35 |
| 8. | 968988&010818JC | Pre laminate, 18.13 x 40.38 |
| 9. | 968988&010912HC | Pre laminate, 25.75 x 12.63 |
| 10. | 372284 | Glass-Door 18.5 x 9.8 |
| 11. | 381707 | Strike W/Pull-Glass Door Black |
| 12. | 382306 | Glass door pull, lower and upper |
| 13. | 204257 | Spacer - Door Catch |
| 14. | 382052 | Spice Rack-Chrome BC/SP |
| 15. | 382308 | Bracket-135 Deg. Corner Brace #10-1682 |
| 16. | 116079 | Extrusion, Corner Nosing, 12' x 7/8” |
| 17. | 386206 | Vent-Louvered 2.63x17.5 Blk #337211-1WM |
| | 381654 | Hinge, Non-Bore glass door, black XL |
| | 704257 | Kit-22" Bungee (2) Cords (4) Holders |
| | 381653 | Latch-Single Touch Black |

# 2022 BASECAMP
## FURNITURE, GALLEY

End Cabinet, CS, BC16

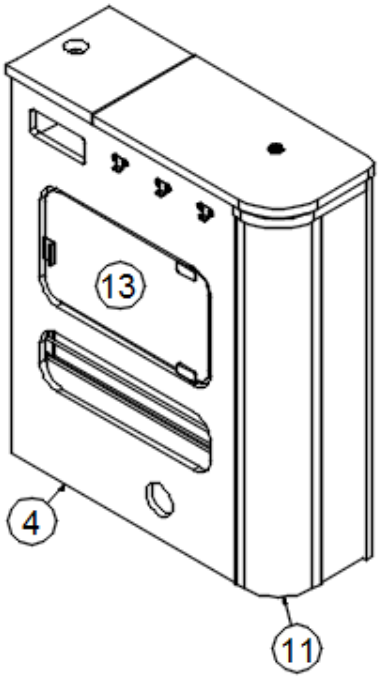


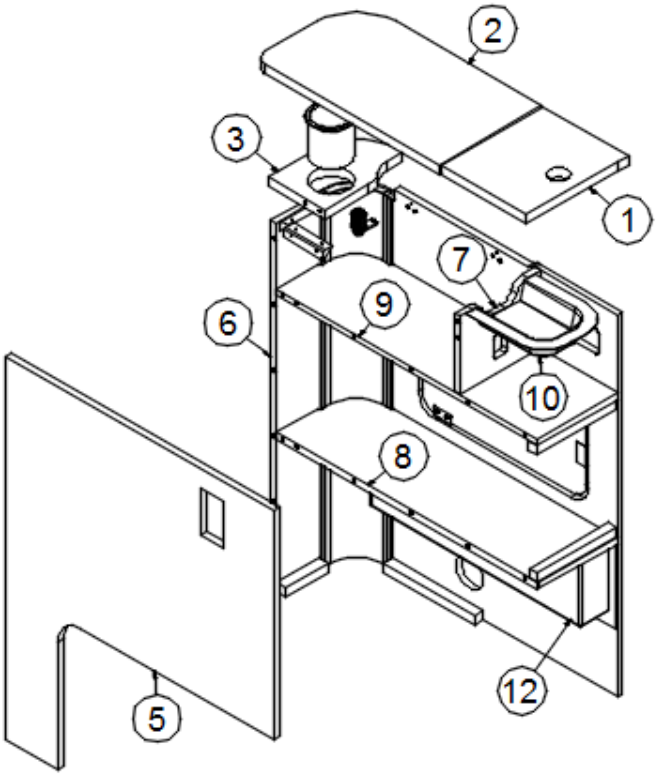


Parts Listed on Next Page

# 2022 BASECAMP
## FURNITURE, GALLEY

### End Cabinet, CS, BC16

| | | |
|---|---|---|
| | 968413 | CS End Cabinet |
| 1. | 968413&000118JC | Pre laminate, 9 x 7.59 |
| 2. | 968413&000218JC | Pre laminate, 9 x 16.38 |
| 3. | 968413&000318JC | Pre laminate, 7.75 x 5 |
| 4. | 968413&000412HH | Pre laminate, .53 x 29.25 |
| 5. | 968413&000512HH | Pre laminate, 23.66 x 29.25 |
| 6. | 968413&000612HH | Pre laminate, 4.5 x 28.25 |
| 7. | 968413&000712HH | Pre laminate, 6 x 7 |
| 8. | 968413&000812CC | Pre laminate, 23.13 x 7 |
| 9. | 968413&000912CC | Pre laminate, 23.06 x 7 |
| 10. | 200773 | Closeout, Reading light |
| 11. | 115682 | Extrusion, 3” radius corner |
| 12. | 203384-01 | Spice rack |
| 13. | 372285 | Glass door, 14.5 x 8.31 |
| | 381654 | Hinge, Glass door, Black |
| | 381707 | Glass strike/pull |
| | 386279 | Corner brace |
| | 382152 | Hook, Hammock, Stainless Steel |
| | 203196 | Cup holder, 3”, Black |
| | 382238 | Hinge, Compact |
| | 381209-01 | Grommet w/cap, Black |
| | 365386-01 | Edgebanding, .63", Linen |
| | 365395-02 | Edgebanding, .94”, Crisp Linen |
| | 365411-02 | Edgebanding, .94”, Steel Mesh |
| | 203440 | T-molding, Black embossed, .8125 |
| | 203710 | T-molding, Almond |
| | 704258 | Bungee kit, 17” |
| | 381912-01 | Cam lock, Max latch 2.06, Keyed alike |
| | 204257 | Spacer - Door Catch |

# 2022 BASECAMP
## FURNITURE, GALLEY

### Galley Top, BC20

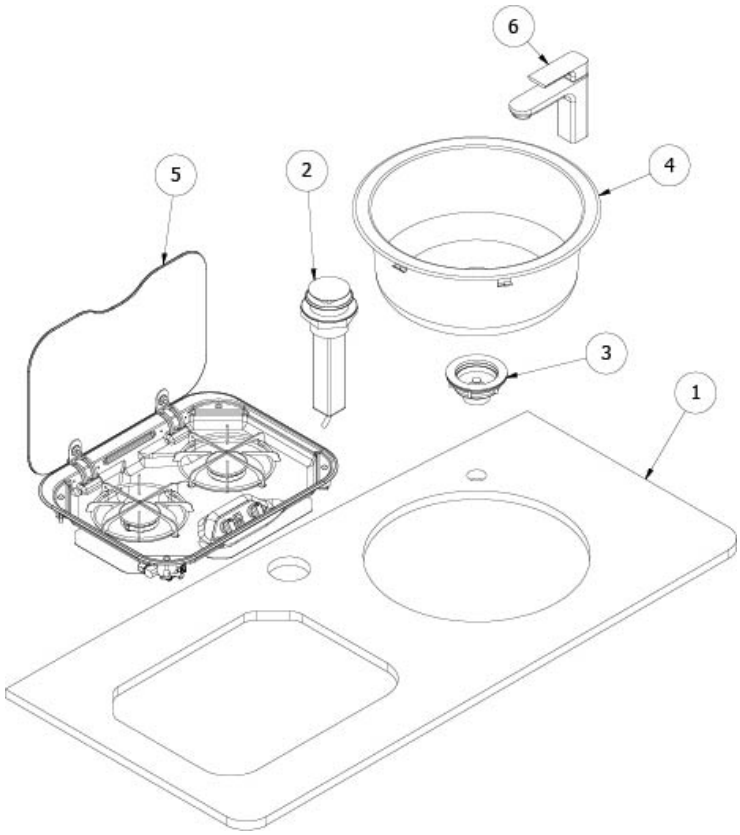


| | | |
|---|---|---|
| | 113261 | Galley Top Install |
| 1. | 969358 | Top Assy - Galley BC20 |
| 2. | 512986 | Outlet - Pop Up BC |
| 3. | 600968 | Basket strainer |
| 4. | 602877 | Sink 7" Hamat Hot-18rt SS 18GA |
| 5. | 690784 | Cooktop, Two burner, Suburban |
| 6. | 602878 | Faucet-Vigo VG01043MB |
| | 204275 | Cover-Sink- 16 & 20 Basecamp (Black) |
| | 601813 | Tail Piece-Lift/Turn Drain |

# 2022 BASECAMP
## FURNITURE, GALLEY

### Galley Cabinet Assembly, BC20

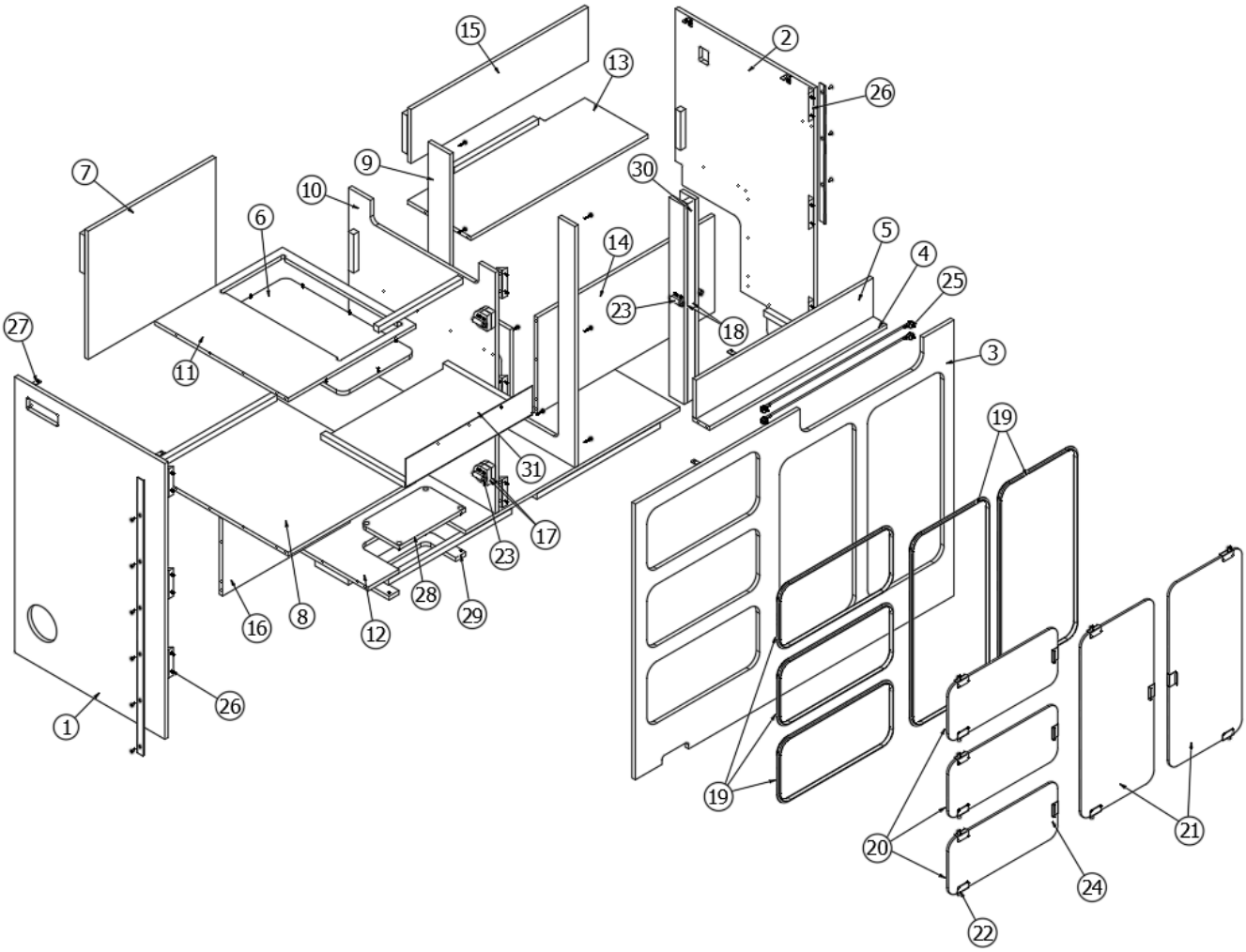


Parts Listed on Next Page

# 2022 BASECAMP
## FURNITURE, GALLEY

### Galley Cabinet Assembly, BC20

| | | |
|---|---|---|
| | 969357 | Assembly, Galley Cabinet |
| 1. | 969357&000112HC | Pre laminate, .5 x 22.5 x 35.75 |
| 2. | 969357&000212HC | Pre laminate, .5 x 20.47 x 35.75 |
| 3. | 969357&000312HC | Pre laminate, .5 x 48 x 35.75 |
| 4. | 969357&000412CC | Pre laminate, .5 x 2.5 x 26.88 |
| 5. | 969357&000512CC | Pre laminate, .5 x 5 x 26.88 |
| 6. | 969357&000612CC | Pre laminate, .5 x 19 x 10.5 |
| 7. | 969357&000712CC | Pre laminate, .13 x 19.13 x 16.63 |
| 8. | 969357&000812CC | Pre laminate, .5 x 20.88 x 19.13 |
| 9. | 969357&000912CC | Pre laminate, .5 x 22.18 x 31.25 |
| 10. | 969357&001012CC | Pre laminate, .5 x 22.18 x 31.25 |
| 11. | 969357&001112CC | Pre laminate, .5 x 20 x 19.13 |
| 12. | 969357&001212CC | Pre laminate, .5 x 11 x 47 |
| 13. | 969357&001312CC | Pre laminate, .5 x 10.72 x 26.88 |
| 14. | 969357&001412CC | Pre laminate, .5 x 26.88 x 12.5 |
| 15. | 969357&001512CC | Pre laminate, .13 x 26.88 x 7 |
| 16. | 969357&001612CC | Pre laminate, .5 x 19.13 x 10 |
| 17. | 204257 | Spacer - Door Catch |
| 18. | 969357&003312CC | Pre laminate, 2.25 x 25.75 |
| 19. | 203445 | T-Molding Blk Flexible Poly .56" |
| 20. | 372317 | Glass Door, 7.300 x 16.375 |
| 21. | 372318 | Glass Door, 11.063 x 23.8 |
| 22. | 381654 | Hinge, non-bore glass door, black XL |
| 23. | 381653 | Latch-Single Touch Black XLLY |
| 24. | 381707 | Strike W/Pull-Glass Door Black |
| 25. | 704257 | Kit-22" Bungee (2) Cords (4) Holders |
| 26. | 386279 | Brace-Corner .75 x .75 x 3.5 |
| 27. | 380041 | Brace 1” Stanley Corner |
| 28. | 969357&003112CC | Pre laminate, .5 x 5.97 x 9.94 |
| 29. | 969357&003212CC | Pre laminate, .5 x 6 x 11.5 |
| 30. | 969357&003418JC | Pre laminate, .75 x 1.13 x 25.75 |
| 31. | 116319 | Stovetop Close Out |
| | 365411-01 | Edgebanding 1MM Steel Mesh 5/8" |
| | 365395-01 | Edgebanding 1MM 5/8" Crisp Linen |
| | 511975 | Switch Assy-4 Gang BLK |
| | 513331 | Inlet-USB Power Blk Poly Fuse |
| | 968385 | Tray-Cutlery Insert BC |
| | 381834 | Hook- Coat Aluminum |
| | 382152 | Hook-Hammock SS |

# 2022 BASECAMP
## FURNITURE, GALLEY

### Refrigerator Cabinet Assembly, No Microwave, BC20

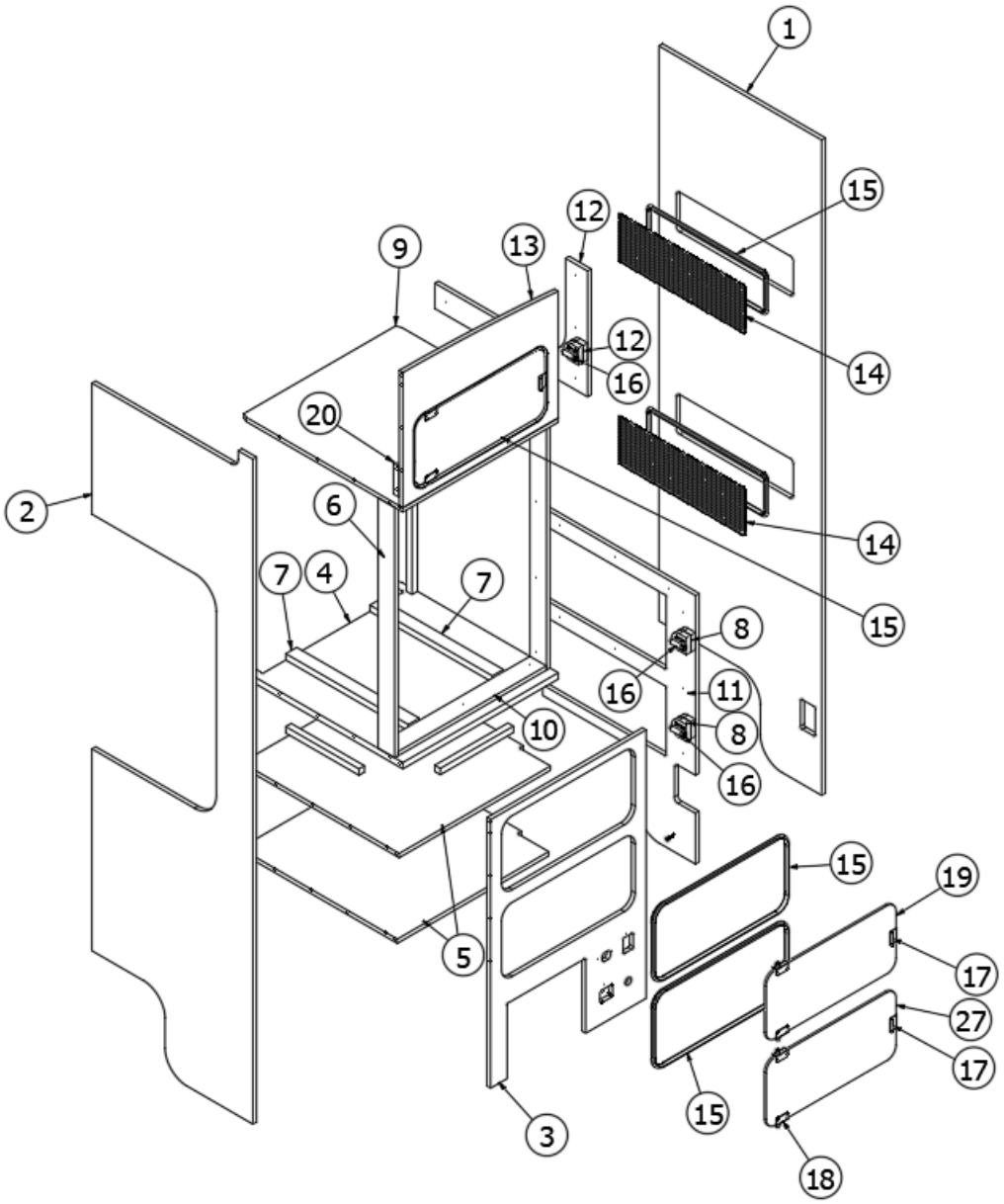


Parts Listed on Next Page

# 2022 BASECAMP
## FURNITURE, GALLEY

### Refrigerator Cabinet Assembly, No Microwave, BC20

| | | |
|---|---|---|
| | 969361 | Assembly, Refer Cabinet |
| 1. | 969361&000112JC | Pre laminate, .5 x 22 x 77.5 |
| 2. | 969361&000212CC | Pre laminate, .5 x 22 x 78.63 |
| 3. | 969361&000412JC | Pre laminate, .5 x 21.25 x 31.75 |
| 4. | 969361&000618HC | Pre laminate, .75 x 22 x 21.25 |
| 5. | 969361&000712CC | Pre laminate, .5 x 21.5 x 21.25 |
| 6. | 969361&000912CC | Pre laminate, .5 x 2.25 x 29 |
| 7. | 969361&001118HC | Pre laminate, .75 x 1.5 x 16.75 |
| 8. | 204257 | Spacer, Door catch |
| 9. | 969361&001812CC | Pre laminate, .5 x 20 x 21.25 |
| 10. | 969361&002112CC | Pre laminate, 2.25 x 20.25 |
| 11. | 969361&003312CC | Pre laminate, .5 x 21.5 x 31.75 |
| 12. | 969361&003612CC | Pre laminate, .5 x 20.88 x 14.88 |
| 13. | 969361&003712JC | Pre laminate, .5 x 21.25 x 16 |
| 14. | 115855 | Alum-Perforated .063 x 48 x 120 |
| 15. | 203445 | T-Molding Blk Flexible Poly .56" |
| 16. | 381653 | Latch-Single Touch Black XLLY |
| 17. | 381707 | Strike W/Pull-Glass Door Black |
| 18. | 381654 | Hinge, Non-Bore Glass door, Black XL |
| 19. | 372315 | Glass Door, Refer |
| 20. | 386279 | Brace-Corner .75 x .75 x 3.5 |
| | 969361&001012CC | Pre laminate, .5 x 2.25 x 2 |
| | 365411-01 | Edgebanding 1MM Steel Mesh 5/8" |
| | 365411-02 | Edgebanding-15/16" 1MM Steel Mesh |
| | 365395-01 | Edgebanding 1MM 5/8" Crisp Linen |
| | 365395-02 | Edgebanding-.94" Crisp Linen |
| | 800422 | Dowel Pin ¼ x 1-1/4 |

# 2022 BASECAMP
## FURNITURE, GALLEY

Refrigerator Cabinet, Microwave Option, BC20

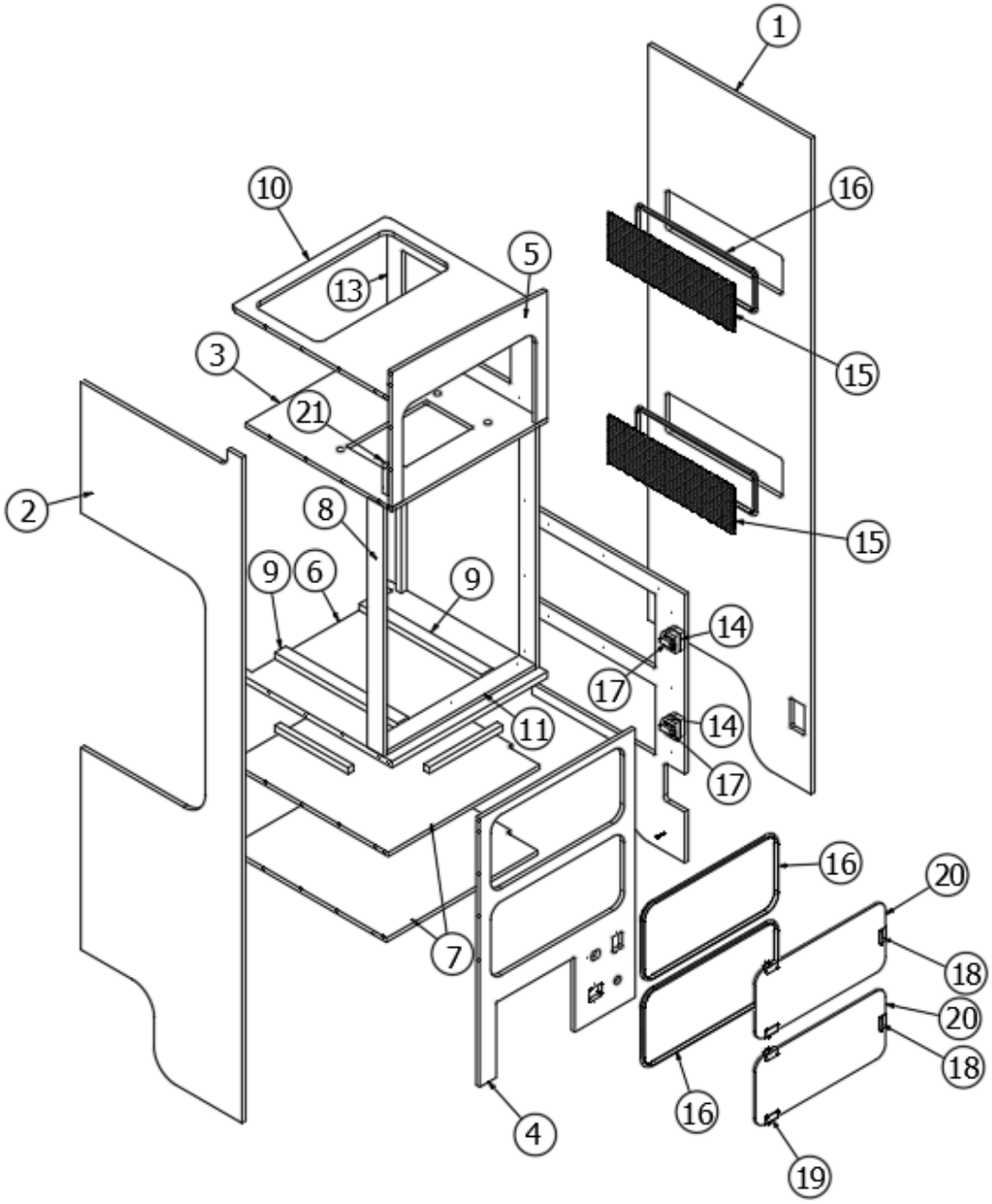


Parts Listed on Next Page

# 2022 BASECAMP
## FURNITURE, GALLEY

### Refrigerator Cabinet, Microwave Option, BC20

| | | |
|---|---|---|
| | 969361-01 | Assembly, Refer Cabinet |
| 1. | 969361&010112JC | Pre laminate, .5 x 22 x 77.63 |
| 2. | 969361&010212CC | Pre laminate, .5 x 22 x 78.63 |
| 3. | 969361&010312CC | Pre laminate, .5 x 20 x 21.25 |
| 4. | 969361&000412JC | Pre laminate, .5 x 21.25 x 31.75 |
| 5. | 969361&000512JC | Pre laminate, .5 x 21.25 x 16 |
| 6. | 969361&010618HC | Pre laminate, .75 x 22 x 21.25 |
| 7. | 969361&010712CC | Pre laminate, .5 x 21.25 x 21.25 |
| 8. | 969361&010912CC | Pre laminate, .5 x 2.25 x 29.63 |
| 9. | 969361&011118HC | Pre laminate, .75 x 1.5 x 16.75 |
| 10. | 969361&011312CC | Pre laminate, .5 x 21.25 x 21.25 |
| 11. | 969361&002112CC | Pre laminate,2.25 x 20.25 |
| 12. | 969361&003312CC | Pre laminate, .5 x 21.5 x 31.75 |
| 13. | 969361&003412CC | Pre laminate, .5 x 20.88 x 12.38 |
| 14. | 204257 | Spacer, Door Catch |
| 15. | 115855 | Alum-Perforated .063 x 48 x 120 |
| 16. | 203445 | T-Molding Blk Flexible Poly .56" |
| 17. | 381653 | Latch-Single Touch Black XLLY |
| 18. | 381707 | Strike W/Pull-Glass Door Black |
| 19. | 381654 | Hinge-Non-Bore Glass Dr. Black XL |
| 20. | 372315 | Glass Door, Refer |
| 21. | 386279 | Brace-Corner .75 x .75 x 3.5 |
| | 969361&011012CC | Pre laminate, .5 x 2.25 x 20.25 |
| | 365411-01 | Edgebanding, 1MM Steel Mesh 5/8" |
| | 365411-02 | Edgebanding, 15/16" 1MM Steel Mesh |
| | 365395-01 | Edgebanding, 1MM 5/8" Crisp Linen |
| | 365395-02 | Edgebanding-.94" Crisp Linen |
| | 800422 | Dowel Pin ¼ x 1-1/4 |

# 2022 BASECAMP
## FURNITURE, GALLEY

Storage Cabinet, BC20

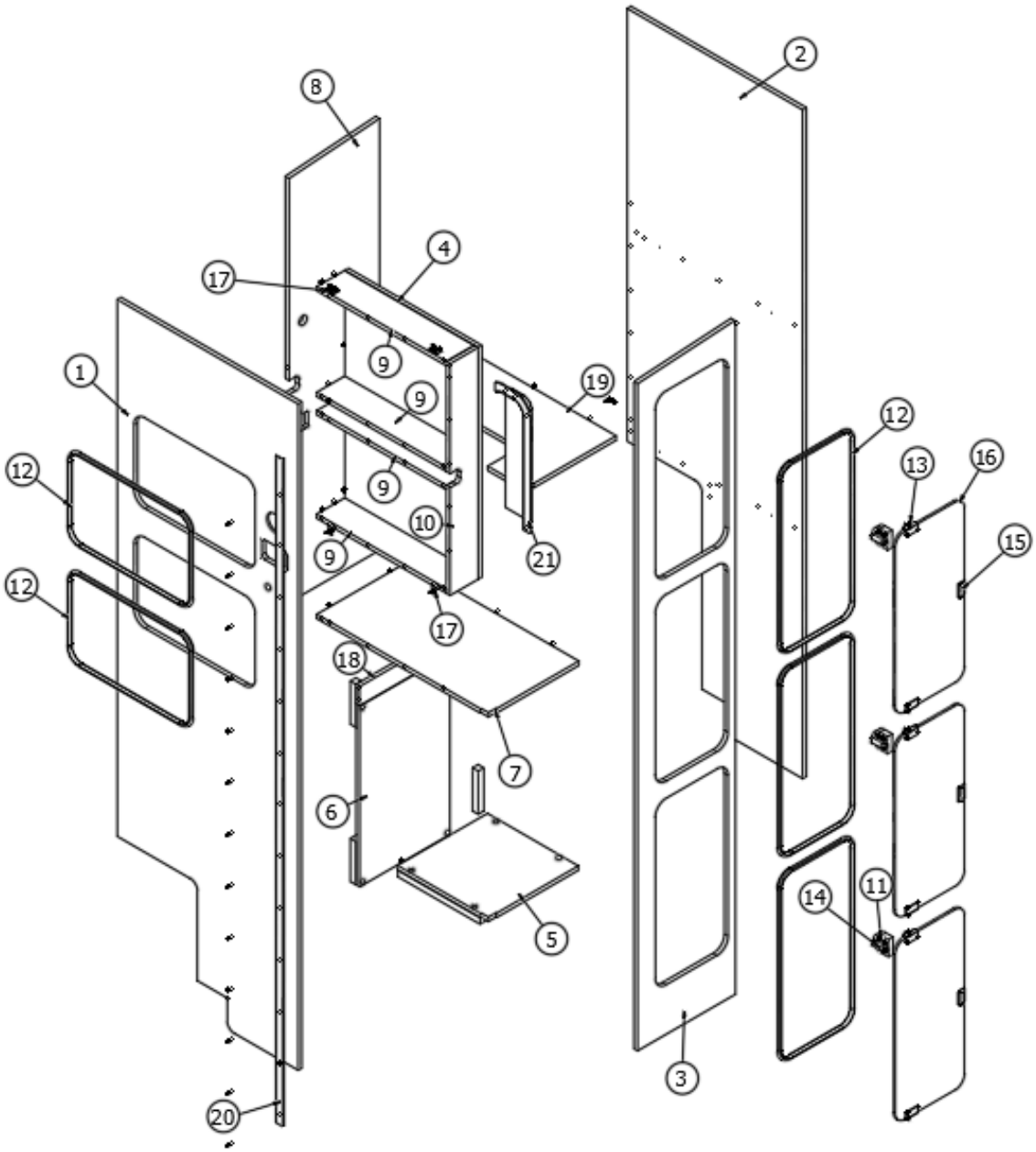


Parts Listed on Next Page

# 2022 BASECAMP
## FURNITURE, GALLEY

### Storage Cabinet, BC20

| | | |
|---|---|---|
| | 969362 | Assembly, Storage Cabinet |
| 1. | 969362&000112JC | Pre laminate, .5 x 24.20 x 77.26 |
| 2. | 969362&000312CC | Pre laminate, .5 x 23.5 x 77.56 |
| 3. | 969362&000412JC | Pre laminate, .5 x 13.13 x 78.19 |
| 4. | 969362&000512CC | Pre laminate, .5 x 17.88 x 26.88 |
| 5. | 969362&000812CC | Pre laminate, .5 x 12.19 x 12.06 |
| 6. | 969362&000912CC | Pre laminate, .5 x 12.09 x 20.97 |
| 7. | 969362&001012CC | Pre laminate, .5 x 12.13 x 23 |
| 8. | 969362&001212CC | Pre laminate, .5 x 12.13 x 50.06 |
| 9. | 969362&001312CC | Pre laminate, 3.75 x 17.38 |
| 10. | 969362&001412CC | Pre laminate, .5 x 3.75 x 26.88 |
| 11. | 204257 | Spacer - Door Catch |
| 12. | 203445 | T-Molding Blk Flexible Poly .56" |
| 13. | 381654 | Hinge-Non-Bore Glass Dr. Black XL |
| 14. | 381653 | Latch-Single Touch Black XLLY |
| 15. | 381707 | Strike W/Pull-Glass Door Black |
| 16. | 372316 | Glass Door, 20.925 x 9.25 |
| 17. | 380041 | Brace 1" Stanley Corner |
| 18. | 969362&003012CC | Pre laminate, 12.13 x 2.25 |
| 19. | 969362&003112CC | Pre laminate, .5 x 12.13 x 23 |
| 20. | 116079 | Extrusion, Corner Nosing, 12' (Sold in A 12 Ft Piece) |
| 21. | 200773 | Closeout, Reading Light ABS |
| | 365386-01 | Edgebanding, .63", Linen |
| | 800422 | Dowel Pin ¼ x 1-1/4 |

# 2022 BASECAMP
## FURNITURE, LOUNGE

### Dinette Seat, Roadside, BC16

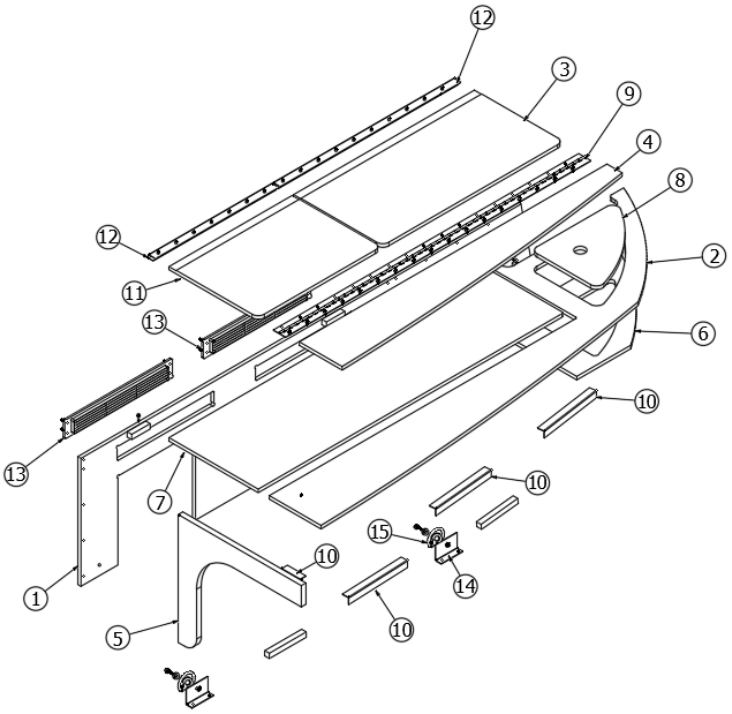


| | | |
|---|---|---|
| | 969303 | Assembly, Dinette Seat, RS |
| 1. | 969303&000112HC | Pre laminate, 18 x 74 |
| 2. | 969303&000212CC | Pre laminate, 22.89 x 72.07 |
| 3. | 969303&000312CC | Pre laminate, 14.5 x 29.38 |
| 4. | 969303&000412CC | Pre laminate, 7 x 50 |
| 5. | 969303&000518JC | Pre laminate, 18 x 20 |
| 6. | 969303&000612CC | Pre laminate, 14 x 21.25 |
| 7. | 969303&000712CC | Pre laminate, 14.5 x 49.63 |
| 8. | 969303&000812CC | Pre laminate,13.25 x 10.75 |
| 9. | 380203-01 | Piano Hinge 1/8” PIN CLR Anodized |
| 10. | 114812 | Alum. Angle 1" x 1 " x 12" |
| 11. | 969303&001312CC | Pre laminate, 14.5 x 20 |
| 12. | 381847-04 | Piano hinge, Angle |
| 13. | 386206 | Vent-Louvered 2.63 x 17.5 BLK |
| 14. | 115769 | Bracket - Tie Down |
| 15. | 381952 | Loop, Tie down |
| | 386182 | Label-"Do Not Store" |
| | 365386-01 | Edgebanding, .63", Linen |
| | 365411-02 | Edgebanding, .94”, Steel Mesh |

# 2022 BASECAMP
## FURNITURE, LOUNGE

Dinette Seat, Curbside, BC16

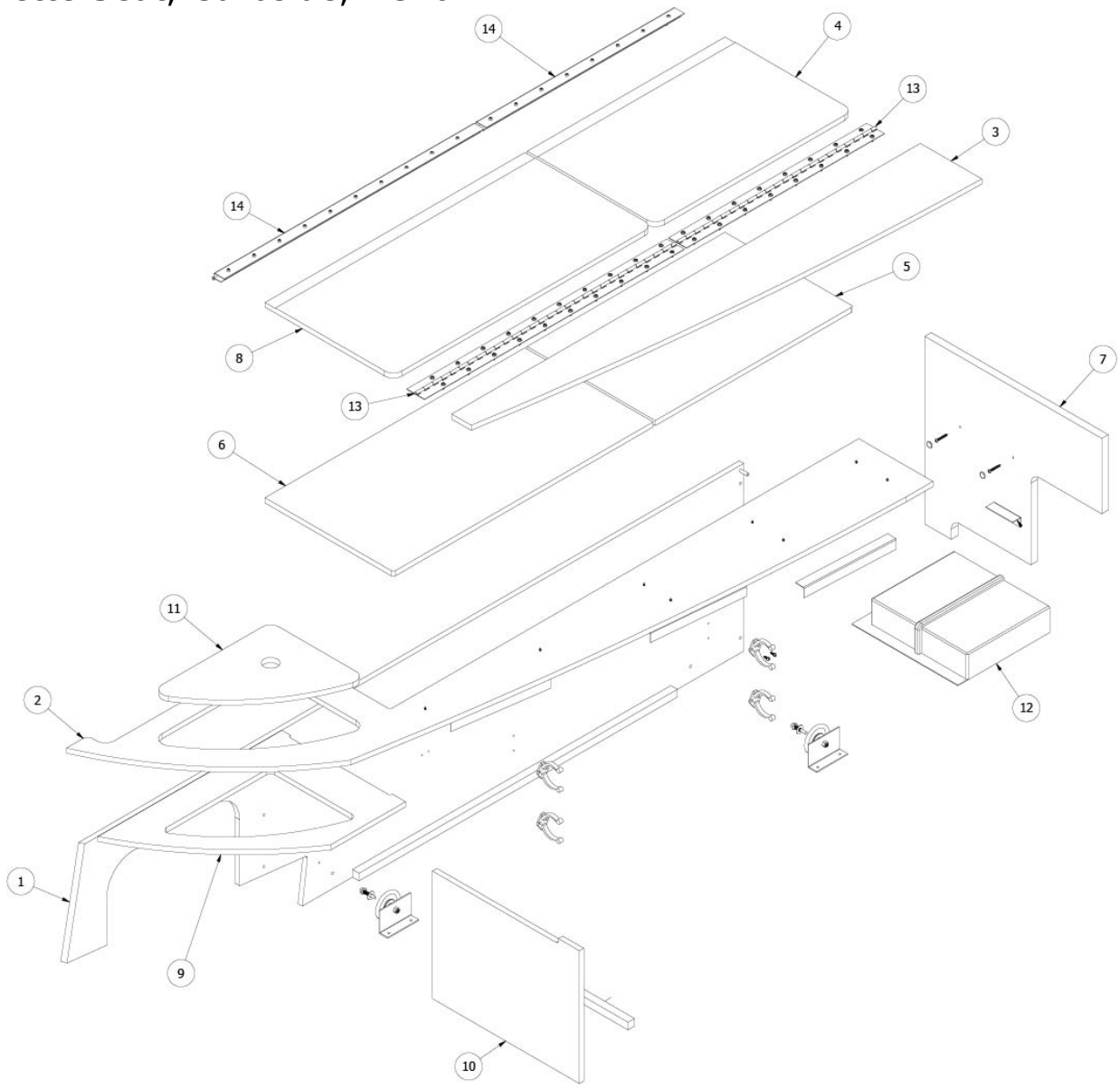


Parts Listed on Next Page

# 2022 BASECAMP
## FURNITURE, LOUNGE

### Dinette Seat, Curbside, BC16

| | | |
|---|---|---|
| | 969304 | Assembly, Dinette Seat, CS |
| 1. | 969304&000112HC | Pre laminate, .5 x 18 x 77 |
| 2. | 969304&000212CC | Pre laminate, .5 x 22.89 x 75.19 |
| 3. | 969304&000312CC | Pre laminate, .5 x 7 x 53 |
| 4. | 969304&002012CC | Pre laminate, .5 x 14.5 x 22.38 |
| 5. | 969304&002112CC | Pre laminate, .5 x 14.5 x 22.38 |
| 6. | 969304&000612CC | Pre laminate, .5 x 14.5 x 29.38 |
| 7. | 969304&000718JC | Pre laminate, 20 x 18 |
| 8. | 969304&000812CC | Pre laminate, .5 x 14.5 x 29.38 |
| 9. | 969304&000912CC | Pre laminate, 14 x 20.78 |
| 10. | 969304&001012CC | Pre laminate, .5 x 12.63 x 16.63 |
| 11. | 969304&001112CC | Pre laminate, .5 x 13.92 x 10.93 |
| 12. | 203384 | Spice rack |
| 13. | 380203-01 | Piano Hinge 1/8” Pin Clr Anodized |
| 14. | 381847-04 | Piano hinge, Angle |
| | 114812 | Alum. Angle 1" x 1 "x 12" |
| | 381952 | Loop, Tie down |
| | 115769 | Bracket - Tie Down |
| | 382721 | Table Post Clip |
| | 203445 | T-Molding Blk Flexible Poly .5 |
| | 365386-01 | Edgebanding, .63", Linen |
| | 365386-02 | Edgebanding, .94", Linen |

# 2022 BASECAMP
## FURNITURE, LOUNGE

Rear Dinette Seat, RS, BC20

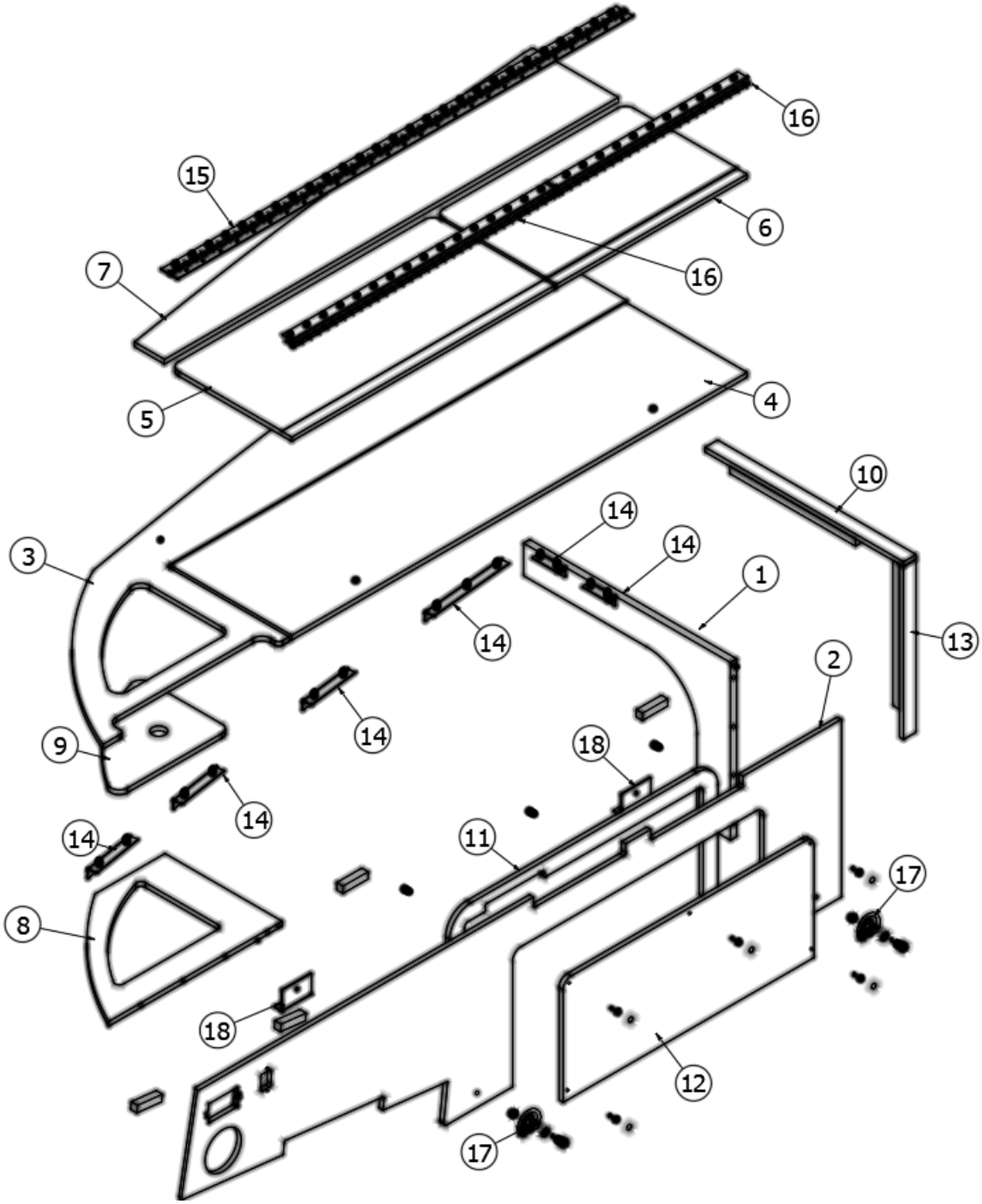


Parts Listed on Next Page

# 2022 BASECAMP
## FURNITURE, LOUNGE

### Rear Dinette Seat, RS, BC20

| | | |
|---|---|---|
| | 969371 | Assembly, Dinette Rear, RS |
| 1. | 969371&000118HC | Pre laminate, .75 x 24.7 x 18.38 |
| 2. | 969371&000212HC | Pre laminate, .5 x 18 x 78.84 |
| 3. | 969371&000312CC | Pre laminate, .5 x 25.17 x 77.19 |
| 4. | 969371&000412CC | Pre laminate, .5 x 14.5 x 54.38 |
| 5. | 969371&000512CC | Pre laminate, .5 x 14.5 x 31.38 |
| 6. | 969371&000612CC | Pre laminate, .5 x 14.5 x 22.75 |
| 7. | 969371&000712CC | Pre laminate, .5 x 26.17 x 54.18 |
| 8. | 969371&000812CC | Pre laminate, .5 x 14 x 21 |
| 9. | 969371&000912CC | Pre laminate, .5 x 10.94 x 13.94 |
| 10. | 969371&004312CC | Pre laminate, .5 x 2.25 x 23.69 |
| 11. | 969371&003312CC | Pre laminate, .5 x 32 x 13.25 |
| 12. | 969371&003412HC | Pre laminate, .5 x 12.59 x 29.94 |
| 13. | 969371&004212HC | Pre laminate, .5 x 2.25 x 17.5 |
| 14. | 114812 | Alum. Angle 1" x 1 "x 12" |
| 15. | 380203-04 | Piano Hinge 1/8” Pin Clr Anodized |
| 16. | 381847-04 | Hinge-Piano Angle 52" |
| 17. | 381952 | Loop, Tie down |
| 18. | 115769 | Bracket - Tie Down |
| 19. | 365013-01 | Tape, Foam Charcoal - Screen Door (27 Ft. Per Roll) |
| | 800422 | Dowel Pin ¼ x 1-1/4 |
| | 365386-01 | Edgebanding, .63", Linen |
| | 365386-02 | Edgebanding, .94", Linen |

# 2022 BASECAMP
## FURNITURE, LOUNGE

### Rear Dinette Seat, CS, BC20

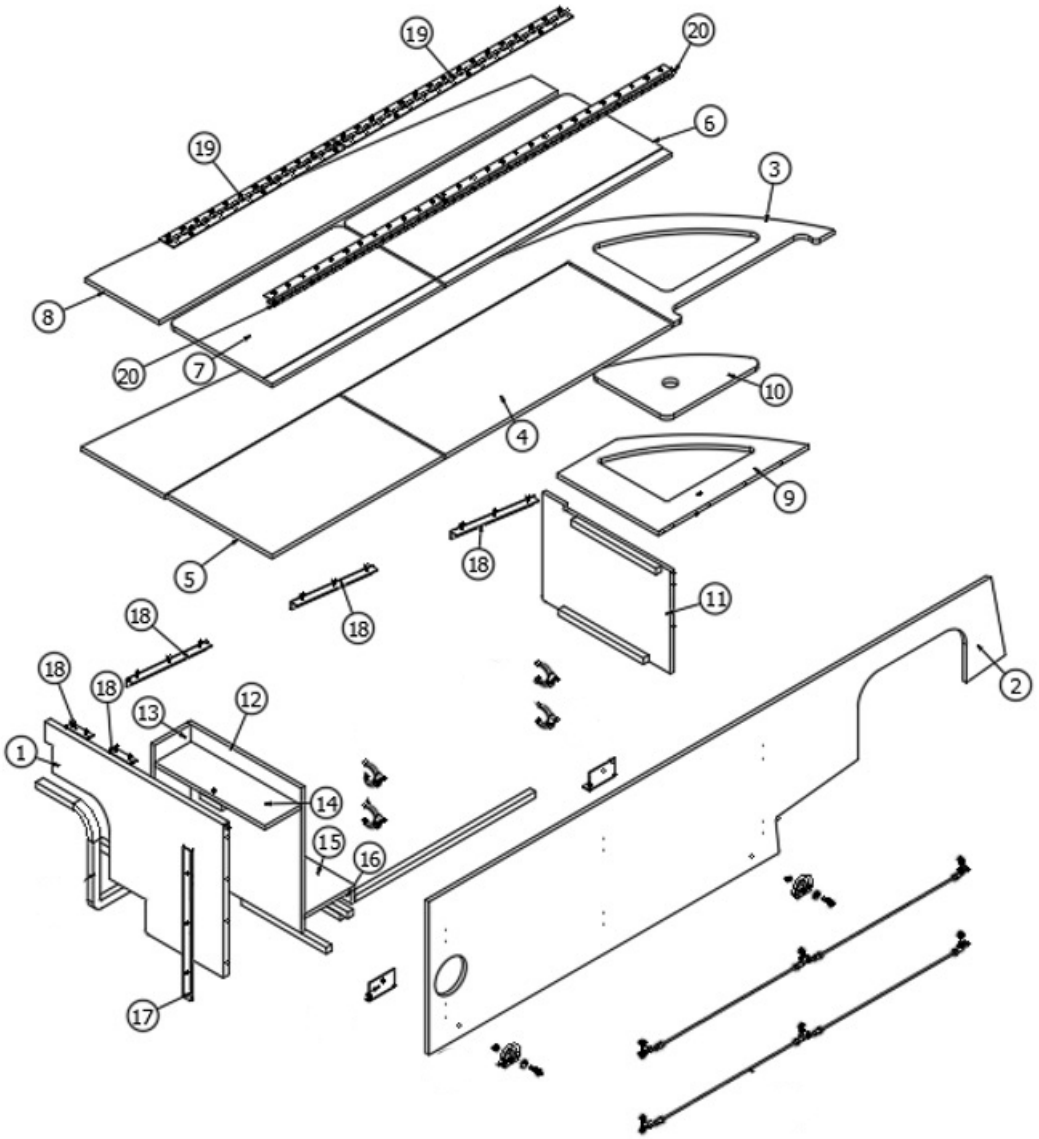


Parts Listed on Next Page

# 2022 BASECAMP
## FURNITURE, LOUNGE

### Rear Dinette Seat, CS, BC20

| | | |
|---|---|---|
| | 969370 | Assembly, Dinette Rear, CS |
| 1. | 969370&000118HC | Pre laminate, .75 x 24.7 x 18.38 |
| 2. | 969370&000212HC | Pre laminate, .5 x 18 x 79.84 |
| 3. | 969370&000312CC | Pre laminate, .5 x 26.17 x 78.19 |
| 4. | 969370&000412CC | Pre laminate, .5 x 14.5 x 31.38 |
| 5. | 969370&000512CC | Pre laminate, .5 x 14.5 x 23.75 |
| 6. | 969370&000612CC | Pre laminate, .5 x 14.5 x 31.38 |
| 7. | 969370&000712CC | Pre laminate, .5 x 14.5 x 23.75 |
| 8. | 969370&000812CC | Pre laminate, .5 x 26.17 x 55.18 |
| 9. | 969370&000912CC | Pre laminate, .5 x 14 x 21 |
| 10. | 969370&001012CC | Pre laminate, .5 x 10.94 x 13.94 |
| 11. | 969370&001112CC | Pre laminate, .5 x 12.5 x 17.75 |
| 12. | 969370&003912CC | Pre laminate, .5 x 17 x 15.13 |
| 13. | 969370&004012CC | Pre laminate, .5 x 17 x 5 |
| 14. | 969370&004112CC | Pre laminate, .5 x 14.56 x 5 |
| 15. | 969370&004312CC | Pre laminate, .5 x 23 x 7 |
| 16. | 969370&004412CC | Pre laminate, .5 x 23 x 1.5 |
| 17. | 116076 | Aluminum Face Nosing, 12' x 1 |
| 18. | 114812 | Alum. Angle 1" x 1 "x 12" |
| 19. | 380203-04 | Piano Hinge Clr Anodized 56" |
| 20. | 381847-04 | Hinge-Piano Angle 56" |
| | 115769 | Bracket - Tie Down |
| | 381952 | Loop, Tie down |
| | 382721 | Table Post Clip |
| | 360417 | Seal-Gasket W/Adhesive Back |
| | 800422 | Dowel Pin ¼ x 1-1/4 |
| | 381610-01 | Cover Cap Plas. European White |
| | 365013-01 | Tape, Foam Charcoal - Screen Door (27 Ft. Per Roll) |
| | 365386-01 | Edgebanding, .63", Linen |
| | 365386-02 | Edgebanding, .94", Linen |
| | 203445 | T-Molding Blk Flexible Poly .56" |

# 2022 BASECAMP
## FURNITURE, LOUNGE

### Front Dinette Seat, BC20

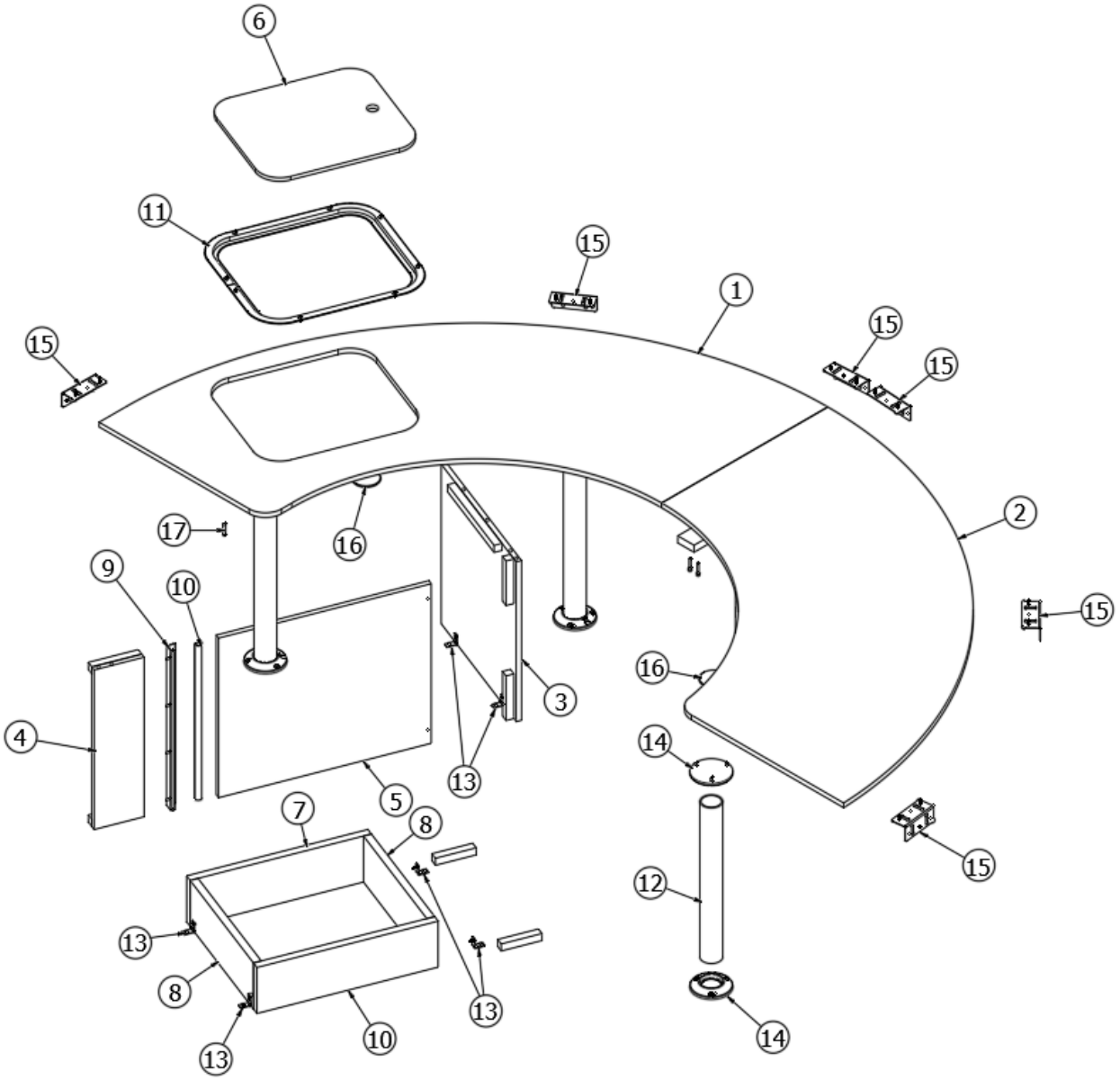


Parts Listed on Next Page

# 2022 BASECAMP
## FURNITURE, LOUNGE

### Front Dinette Seat, BC20

| | | |
|---|---|---|
| | 969374 | Assembly-Front Dinette |
| 1. | 969374&000112CC | Pre laminate, .5 x 48 x 48 |
| 2. | 969374&000212CC | Pre laminate, .5 x 48 x 48 |
| 3. | 969374&000312HC | Pre laminate, .5 x 16.13 x 17 |
| 4. | 969374&000412HC | Pre laminate, .5 x 4.75 x 17 |
| 5. | 969374&000512HC | Pre laminate, .5 x 20.24 x 17 |
| 6. | 800507-03 | Lauan, 3/8” x 4’ x 8’ |
| 7. | 969374&001018HC | Pre laminate, .75 x 4.9 x 17.25 |
| 8. | 969374&001118HC | Pre laminate, .75 x 4.9 x 13.6 |
| 9. | 0106-0015 | Extr.5516 95” Eyebrow Trl Door |
| 10. | 365458 | Rubber Seal, W/PSA 5/8 x 3/8 |
| 11. | 114295 | Trim ring, Dinette seat |
| 12. | 116243 | Pole, Seat 2" Tubing |
| 13. | 380041 | Brace 1” Stanley Corner |
| 14. | 116242 | 2" Socket |
| 15. | 455309-05 | Bracket-Furniture Mount |
| 16. | 116266 | Bracket, Table Stop |
| 17. | 800422 | Dowel Pin ¼ x 1-1/4 |
| | 365411-01 | Edgebanding, 1MM Steel Mesh 5/8" |
| | 365395-01 | Edgebanding, 1MM 5/8" Crisp Linen |
| | 203138-06 | Wall Extrusion-Plas Ash Grey |
| | 704787 | Velcro Loop Black 2.0" Wide-Adhesive Back |

# 2022 BASECAMP
## FURNITURE, LOUNGE

### Dinette Tables, BC16

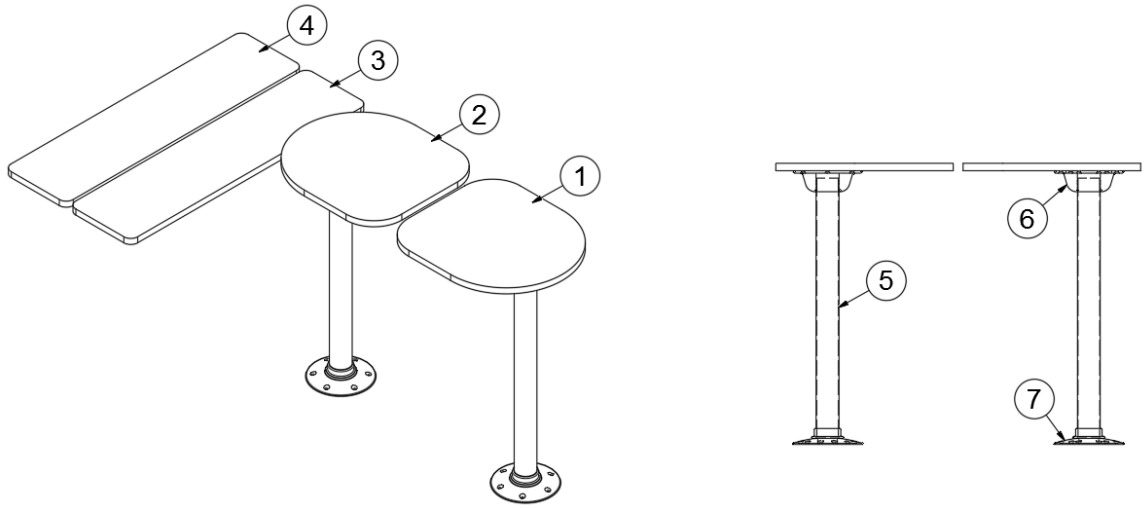


| | | |
|---|---|---|
| | 968455 | Dinette Table |
| 1. | 968455&000118JC | Pre laminate, 16 x 18 |
| 2. | 968455&000218JC | Pre laminate, 16 x 18 |
| 3. | 968455&000318JC | Pre laminate, 34 x 8.88 |
| 4. | 968455&000418JC | Pre laminate, 34 x 8.88 |
| 5. | 382722-02 | Table Leg 29.88 |
| | 382722-01 | Table Leg 17.38 |
| 6. | 382724 | Table Base - Pedestal Leg |
| 7. | 382723 | Floor Base-Pedestal Leg |
| | 203941-01 | Molding-5 7/8" Putty Gray (Crisp Linen) |
| | 203942-01 | Molding-T 13/16 Storm Gray (Steel Mesh) |
| | 365464-02 | Edgebanding, 2MM-15/16" Crisp Linen |
| | 365465-02 | Edgebanding, 2MM - 15/16" Steel Mesh |

### Dinette Table Storage

| | |
|---|---|
| 704270 | Kit, Dinette tabletop storage |
| 382365 | Plastic eyelets, Black |
| 704279 | Bungee w/hook, No tongue, 22” |

# 2022 BASECAMP
## FURNITURE, LOUNGE

### Front Dinette Table, BC20

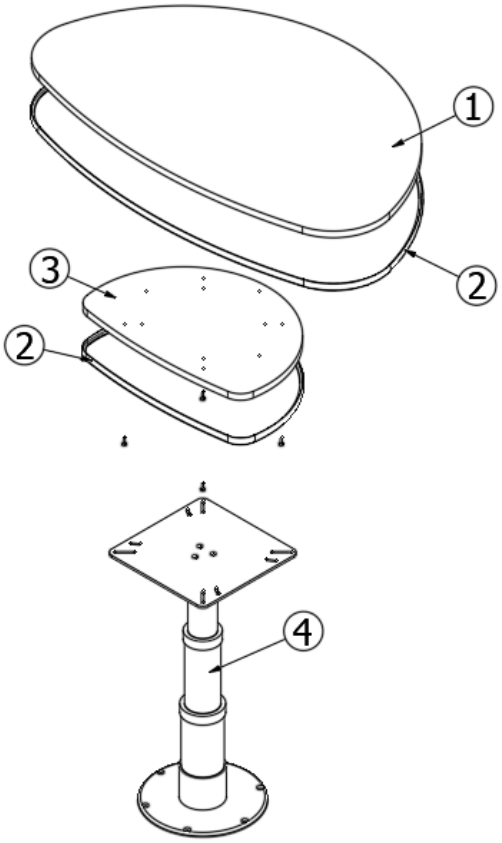


| | | |
|---|---|---|
| | 969379 | Assembly, Dinette Table, Front |
| 1. | 969379&000118JC | Pre laminate, .75 x 44 x 26.18 |
| 2. | 203942-01 | Molding-T 13/16 Storm Gray (Steel Mesh) |
| | 203941-01 | Molding-7/8" Putty Gray (Crisp Linen) |
| 3. | 969379&000518CC | Panel 75 x 22.00 x 15.13 |
| 4. | 382073-01 | Bracket-Pedestal Table |

# 2022 BASECAMP
## FURNITURE, LOUNGE

### Rear Dinette Tables, BC20

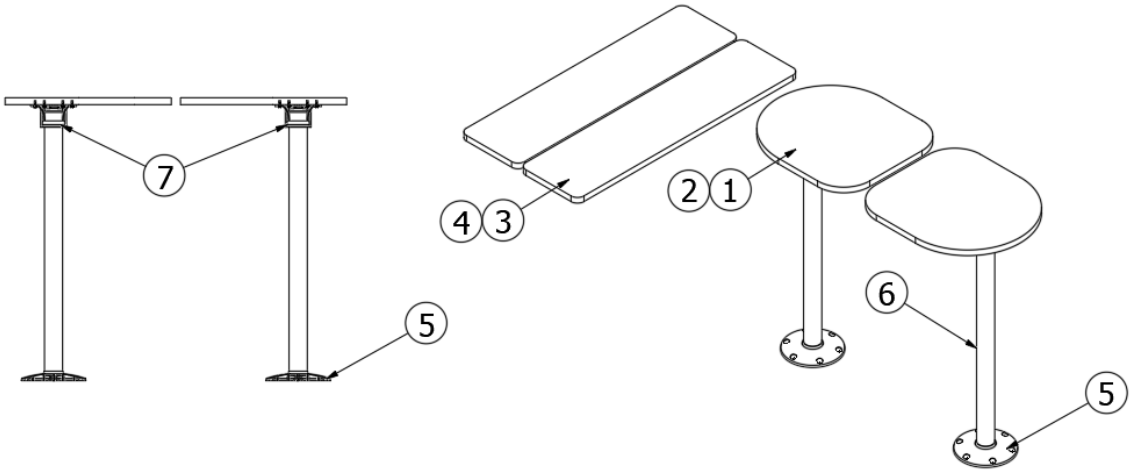


| | |
|---|---|
| 969380 | Assembly, Dinette Table / U-Panels, Rear |
| 1. 969380&000118JC | Pre laminate, .75 x 16 x 18 |
| 2. 365395-02 | Edgebanding-.94" Crisp Linen |
| 365411-02 | Edgebanding-15/16" 1MM Steel Mesh |
| 3. 969380&000218JC | Pre laminate, .75 x 8.88 x 34 |
| 4. 203941-01 | Molding-7/8" Putty Gray (Crisp Linen) |
| 203942-01 | Molding-T 13/16 Storm Gray (Steel Mesh) |
| 5. 382723 | Floor Base-Pedestal Leg |
| 6. 382722-02 | Table Leg 29.88" |
| 7. 382724 | Table Base - Pedestal Leg |
| 382722-01 | Table Leg 17.38" |

# 2022 BASECAMP
## HARDWARE

### Main Door Latch with Deadbolt

| | |
|---|---|
| 382311 | Main door latch w/deadbolt, Black |
| 382311-01 | Interior handle w/deadbolt, Black |
| 382311-02 | Door edge cover plate |
| 382311-03 | Handle mounting screws |
| 382311-04 | Door edge mounting screws |
| 455371 | Pocket strike, Main door |

### Rear Door Latch and Lock

| | |
|---|---|
| 382312 | Cargo door latch |
| 382312-01 | Plunger Bolt |
| 382312-03 | Non-locking L-handle |
| 115783 | Rear door latch plate |
| 381423-04 | Strike plate |
| 382327 | Clamp, Actuator cable |
| 382416 | Rope, 316 SS wire, 1/16” Dia. |

### Interior Hinges

| | |
|---|---|
| 382238 | Hinge, Compact blum, Steel Plated Nickel |
| 381847-02 | Piano hinge angle |
| 380203-04 | Piano hinge, Clear anodized, 56” |
| 382306 | Hinge, Glass door pivot set |
| 381654 | Hinge, Glass door, Black |
| 382731 | Hinge-Cont.-Clear Anodized 57" |

### Exterior Hinges

| | |
|---|---|
| 382371 | Hinge, Rear window |
| 382065 | Hinge, Rear door |
| 380203-01 | Piano hinge, 1/8 pin, Clear anodized, 72” |
| 382451 | Piano hinge, Painted at top |
| 380988 | Hinge, Continuous |
| 382655 | Hinge-Friction |

# 2022 BASECAMP
## HARDWARE

### Exterior Latches and Handles

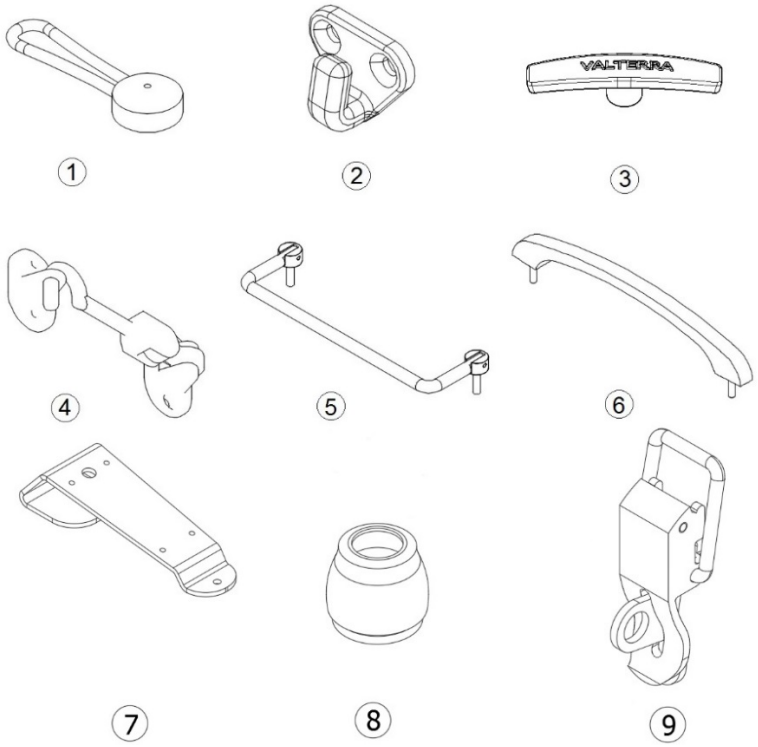


| | | |
|---|---|---|
| 1. | 99900P-1001 | Shock cord clip, Black |
| 2. | 99900P-1002 | Shock cord hook, Black |
| 3. | 601607-17 | Handle, Dump valve, Black |
| | 601607-18 | Handle, Dump valve, Gray |
| 4. | 386314 | Main door stay |
| 5. | 386318 | Folding Handle |
| 6. | 101171-01 | Grab handle, Main door, Black |
| 7. | 116003-01 | Door Latch Bracket |
| 8. | 382624 | Rubber Bumper |
| 9. | 340023-01 | Catch and strike, Zinc |
| | 382689 | Gasket - Door Stay |

### Interior Latches and Handles

| | |
|---|---|
| 381707 | Strike w/pull, Glass door, Black |
| 382311-01 | Interior handle w/deadbolt, Black |
| 382312-03 | Non-locking L-handle |
| 382415 | Tapered Handle |
| 381653 | Latch, Single touch, Black |
| 382388 | Latch, Rear window |
| 455175-01 | Bracket, CS window latch |
| 455175-02 | Bracket, RS window latch |
| 382055 | Latch, Privacy door |
| 381737-02 | Handle, Assist, Molded, Black |

# 2022 BASECAMP
## HARDWARE

### Head knocker

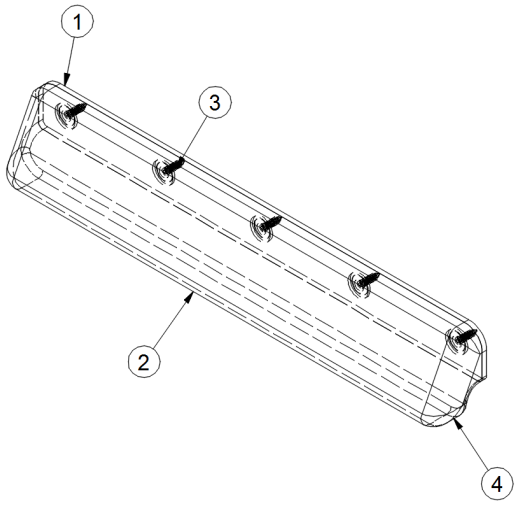


| | |
|---|---|
| 998234 | Head Knocker |

| | |
|---|---|
| 1. 802149 | Head knocker backer board |
| 2. 704326 | Head knocker foam |
| 3. 382062 | Fastener, Finned |
| 4. 704322 | Sunbrella sail cloth shade |

### Bathroom Accessories

| | |
|---|---|
| 602284 | Towel bar, 18”, Polished Stainless Steel |
| 381834 | Hook, Aluminum |
| 602175 | Holder, Dryroll toilet roll, White |
| 704272 | Shower caddy |
| 371455 | Mirror, Exterior of bath door |
| 371456 | Mirror, Interior of bath door |

### Shower Curtain

| | |
|---|---|
| 101225 | Extr. Alum Curtain Track Attach (Sold in A 10.5 Ft Piece) |
| 101217 | Extrusion Curtain Track |
| 200784 | Ends, Curtain Track, RH White |
| 200785 | Ends, Curtain Track, LH White |
| 320078 | Screw, 8 x 3-8 |
| 704679 | Shower Curtain-Basecamp |
| 703467-03 | Shower Curtain Strap |

### Clothesline

| | |
|---|---|
| 382063 | Clothesline, Retractable |

# 2022 BASECAMP
## HARDWARE

### Rivets

| | |
|---|---|
| 325000-01 | Rivet, 1/8”, 1/4” length anodized Clear |
| 325004-01 | Rivet, 1/8”, length .5”, anodized Clear |
| 330139-01 | Rivet, Magnalok, ¼”, SS |
| 330152 | Rivet, 1/8” Aluminum w/Steel Mandrel |
| 330038 | Rivet, Blind AD 54 ABS-LF |
| 330034 | Rivet, Pop AD68 |
| 330126-03 | Rivet, Pop, SSD44SSBS |
| 330127-04 | Rivet, 1/8, AD44ABS |
| 330151 | Rivet- 5/32" Multi Grip Blind |

### Screws

| | |
|---|---|
| 320192 | Screw, 18-8, .75”, Keder rail install |
| 345558 | Screw, #8-32 x .5, PH, Black, Windows |
| 345073-08 | Screw, .25-20 x 1.375, Phil, Wafer HD, Floor |
| 320159 | Screw, M6 x 45mm, Self-drilling w/wings, Floor |
| 320029-01 | Screw, #8 x .5 PPH, Type A, SS, Taillight install |
| 300176 | Screw, 8/32 x .75, FH PH, SS, Taillight install |

## Detectors and Fire Extinguishers

| | |
|---|---|
| 510781 | Smoke detector |
| 690381-02 | Fire extinguisher |
| 513796 | Detector-LP-CO2 |

## Labels and Tags

| | |
|---|---|
| 386120 | Label, Smoke Alarm Warning |
| 386121 | Label, if you smell propane |
| 386122 | Label, Comfort heating |
| 386182 | Label, "Do Not Store" |
| 386192 | Hang tag, Battery deactivated |
| 386252 | Label, Hepvo Waterless Trap |
| 386302 | Label, Maximum pan size |
| 386303 | Label, Clean with mild detergents |
| 386369 | Warning label, Cancer, and reproductive harm |
| 385465 | Label, Exit |
| 385062 | Decal, this connection is for 110-125 voltage |
| 385942 | Label, Sewage holding tank |
| 385943 | Label, Cap must be securely in place |
| 386114 | Label, RVIA Silver |
| 386123 | Label, Potable water only |
| 386193 | Label, Wheel separation can occur |
| 386250 | Label, LPG Service Port |
| 386284 | Label, do not use or install a dolly wheel |
| 385763 | Tag, Winterize |
| S000672 | Certified green label |
| 365477 | Decal - Black Tank Flush |
| 365478 | Decal-City Water Inlet |
| 386477 | Label, Solar prewire |
| 385560 | Label, Air Conditioner Rating |
| 385020 | Sticker, Self-Adhering, Jack |
| 386298 | Label, Microwave Circuit Rating |
| 386118 | Label LP Gas Tri-Warning |
| 386556-02 | QR code sticker |

# 2022 BASECAMP
## PLUMBING, LPG SYSTEM

### LP Tank and Regulator

| | |
|---|---|
| 601781 | LP tank, 20#, Steel |
| 602870 | LP Regulator |
| 455841 | Wing nut, LP tank |
| 345764 | Threaded rod |
| 602332-02 | Pan kit, Black |
| 455842 | Hold down, LP tank |
| 381613 | Cover, LP wing handle |
| 602109-01 | Coupler, Disconnect |

### LP Tank Cover

| | |
|---|---|
| 112332 | Kit, Complete LP cover |
| 203860 | LP lid |
| 203861 | LP tray |
| 203856 | LP shroud body |
| 99900P-1002 | Shock cord hook, Black |
| 99900P-1001 | Shock cord clip, Black |
| 115809 | LP logo wrap |
| 386255-01 | Airstream curved lettering |
| 115867 | LP lid hinge stiffener |
| 382655 | Hinge-Friction |
| 386118 | Label LP Gas Tri-Warning |
| 455842 | Hold down VTD0046 |

# 2022 BASECAMP
## PLUMBING, LPG SYSTEM

### LPG System, BC16

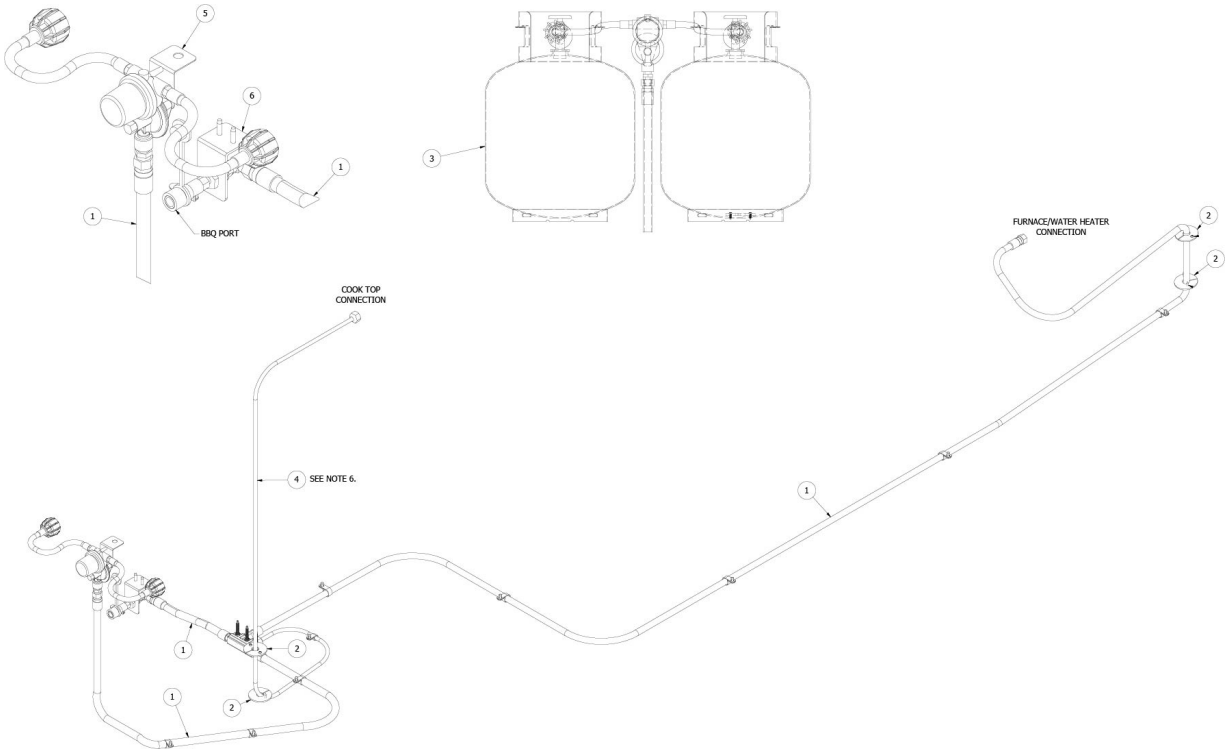


| | | |
|---|---|---|
| | 943892-01 | LPG System Layout |
| 1. | 944015 | LP flex line assembly |
| 2. | 382556 | LP closeout |
| 3. | 601781 | LP tank, 20#, Steel |
| 4. | 944017 | LP copper line assembly |
| 5. | 602870 | LP Regulator |
| 6. | 602465 | Exterior propane port assembly |
| | 345181 | Screw, ¼-14 x 2”, Self-tapping |
| | 381332-16 | Star washer |

# 2022 BASECAMP
## PLUMBING, LPG SYSTEM

### LPG System, BC20

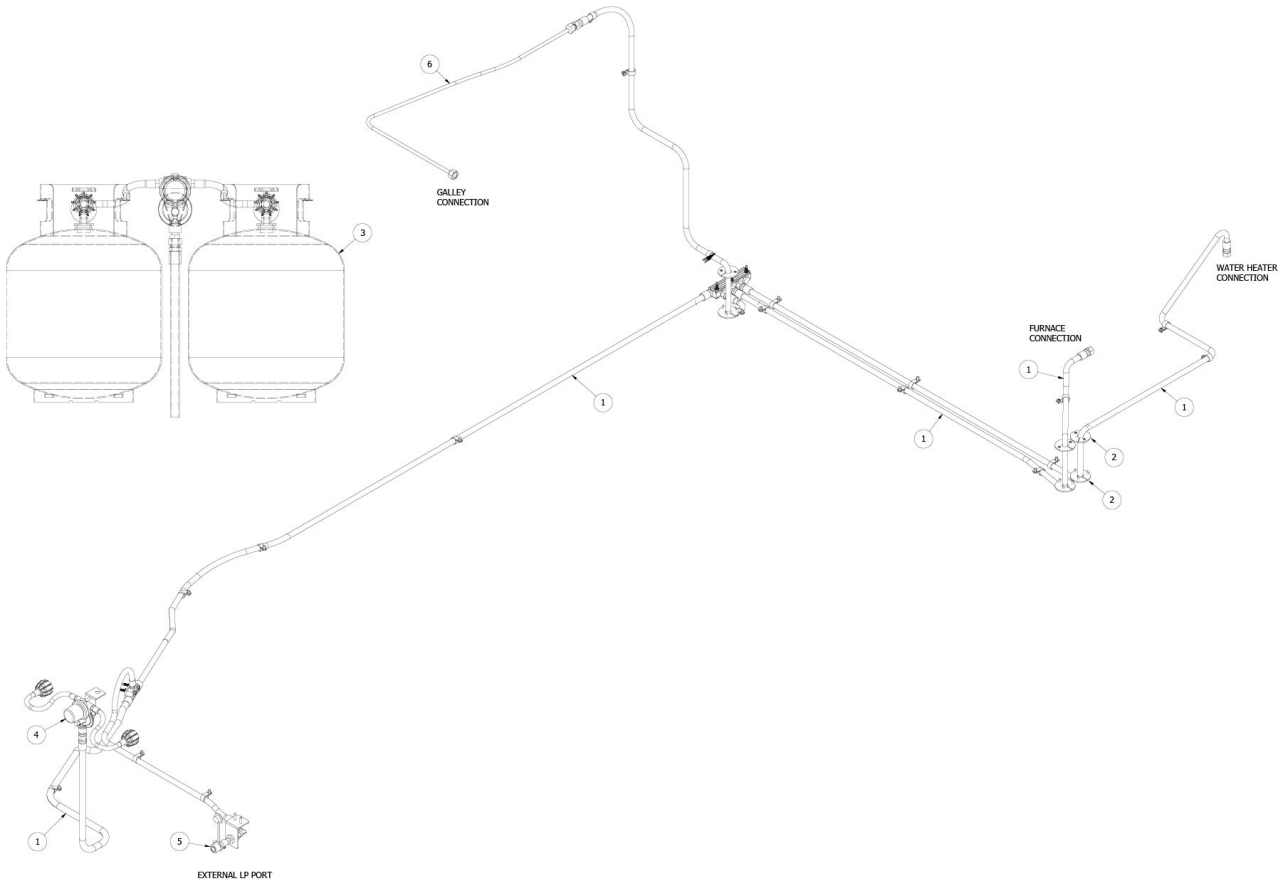


| | | |
|---|---|---|
| | 113233 | LPG System Layout |
| 1. | 944016 | LP flex line assembly |
| 2. | 382556 | Closeout- 2.38"D LP Assy BC |
| 3. | 601781 | LP Tank-20lb Steel |
| 4. | 602870 | LP Regulator |
| 5. | 602465 | Exterior propane port assembly |
| 6. | 944018 | LP copper line assembly |
| | 340085-06 | Clamp, Loop, Steel W/Rubber,.75 DIA |
| | 381332-16 | Star washer |
| | 600238 | Flare union, 3/8” |

# 2022 BASECAMP
## PLUMBING, LPG SYSTEM

### Propane Port, Exterior

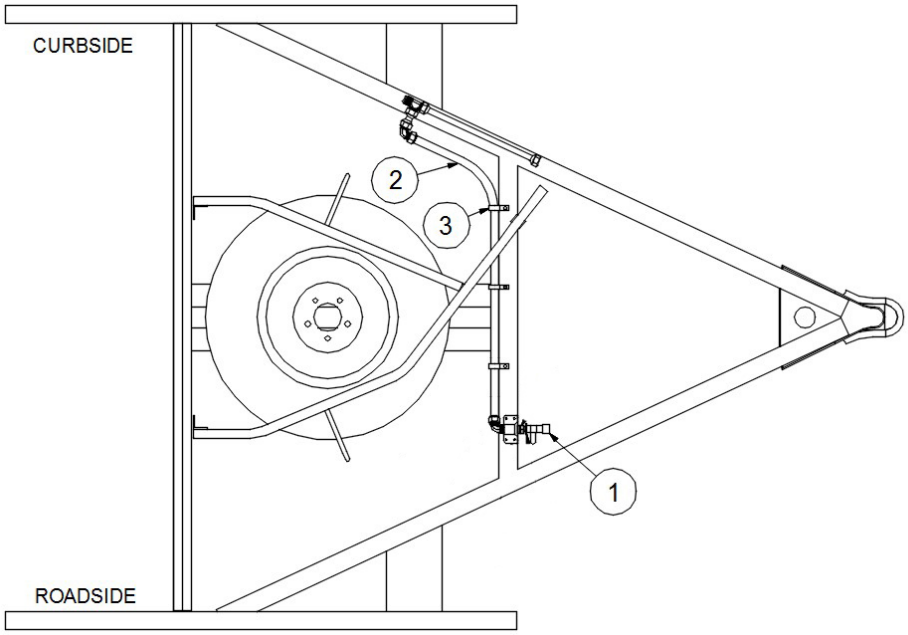


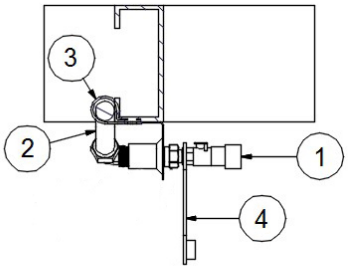


| | | |
|---|---|---|
| | 112008 | Exterior Propane Port |
| 1. | 602465 | Exterior propane port assembly |
| 2. | 602315-01 | LP Hose, .5” FLR SWV, 18” |
| 3. | 340085-07 | Clamp, Loop, Steel w/rub, 1” |
| 4. | 602109-03 | Dust plug |
| | 201267-11 | Conduit, Convoluted, 1” |
| | 386250 | Label, LPG Service Port |

# 2022 BASECAMP
## PLUMBING, FRESH WATER SYSTEM

### Faucet, Galley

| | |
|---|---|
| 602878 | Faucet-Vigo VG01043MB |

### Faucet, Shower

| | |
|---|---|
| 601358 | Shower hand unit, Chrome |
| 604877-01 | Shower valve |

### City Water Hook-Up

| | |
|---|---|
| 601392-06 | City water fill, 50 PSI, Chrome |
| 601392-01 | Plastic screw-in cap |
| 601392-02 | Strap |

### Fresh Water Tank Fill

| | |
|---|---|
| 601194 | Water fill w/lock, Gray |
| 601194-02 | Cap, cable, & spout |
| 601239-01 | Tubing, 1.375” ID, Flexible, Water fill hose |

### Water Pump

| | |
|---|---|
| 602307 | Shurflo water pump, 3 GPM |
| 601668-01 | Strainer, Water pump |

### Fresh Water Tank

| | |
|---|---|
| 602538 | Fresh water tank, 16’ |
| 455052 | Tank pan, Fresh water, 16’ |
| 602785-3 | Fresh water tank, 20’ |
| 455709 | Tank Pan - Fresh Water, 20’ |
| 601243 | Drain cock |
| 340301 | Worm clamp, Dual bead |
| 200152 | Styrofoam, .5 x 6 x 42 |
| 200507 | Styrofoam, 1 x 25 x 55 |
| 511780 | Tank heating pad |
| 602185-01 | Drain valve, 90° |

# 2022 BASECAMP
## PLUMBING, FRESH WATER SYSTEM

### Fresh Water Fittings

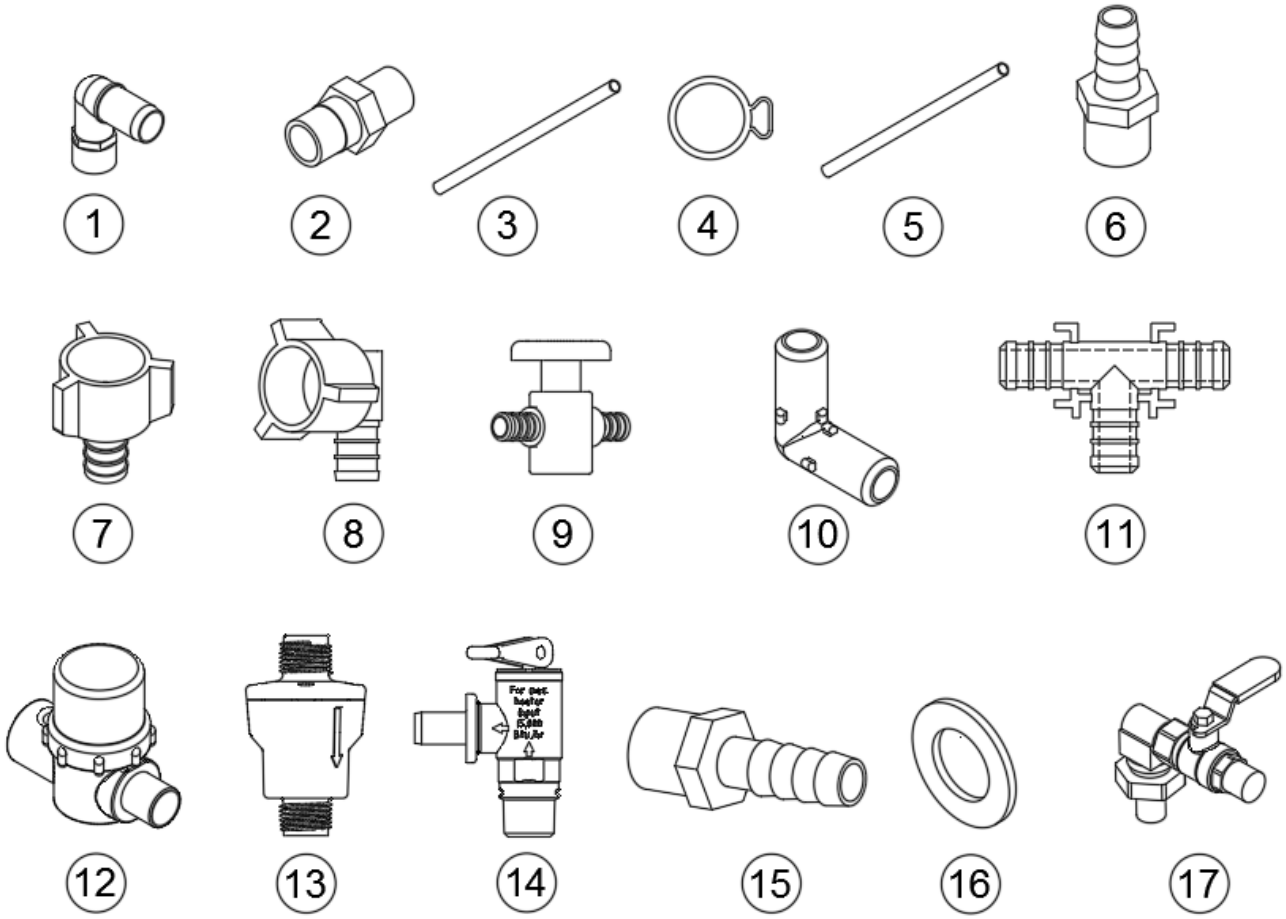


| | | |
|---|---|---|
| 1. | 601237 | Elbow, 90°, 1.25” MPT x 1.25” Bar |
| 2. | 602308 | Valve-Check .5" MPT x .5" MPT Brass |
| 3. | 601698-01 | E-Pex tube, .5” |
| 4. | 601698-15 | Crimp ring, .5” E-Pex, .5”, Black |
| 5. | 601698-21 | E-Pex tube, .5”, Red |
| 6. | 602256-02 | Coupler, .5” barb x .5” MPT |
| 7. | 602256-03 | Coupler, .5” barb x .5” FPT |
| 8. | 602256-05 | Elbow, .5” barb x .5” FPT |
| 9. | 602256-22 | Valve, .5” barb x .5” barb straight, Black Pex |
| 10. | 602256-10 | Elbow, .5” barb x .5” barb |
| 11. | 602256-11 | Tee, .5” x .5” x .5” |
| 12. | 601668-01 | Strainer-Fresh Water Pump |
| 13. | 690704-19 | Regulator-Water Pressure |
| 14. | 690704-20 | Pressure Relief VLV W/Drain VLV Combination |
| 15. | 601004 | Coupling, .5” barb x 3/8” MPT |
| 16. | 300124 | Zinc washer |
| 17. | 602185-01 | Drain valve, 90° |

# 2022 BASECAMP
## PLUMBING, FRESH WATER SYSTEM

Fresh Water Lines, BC16

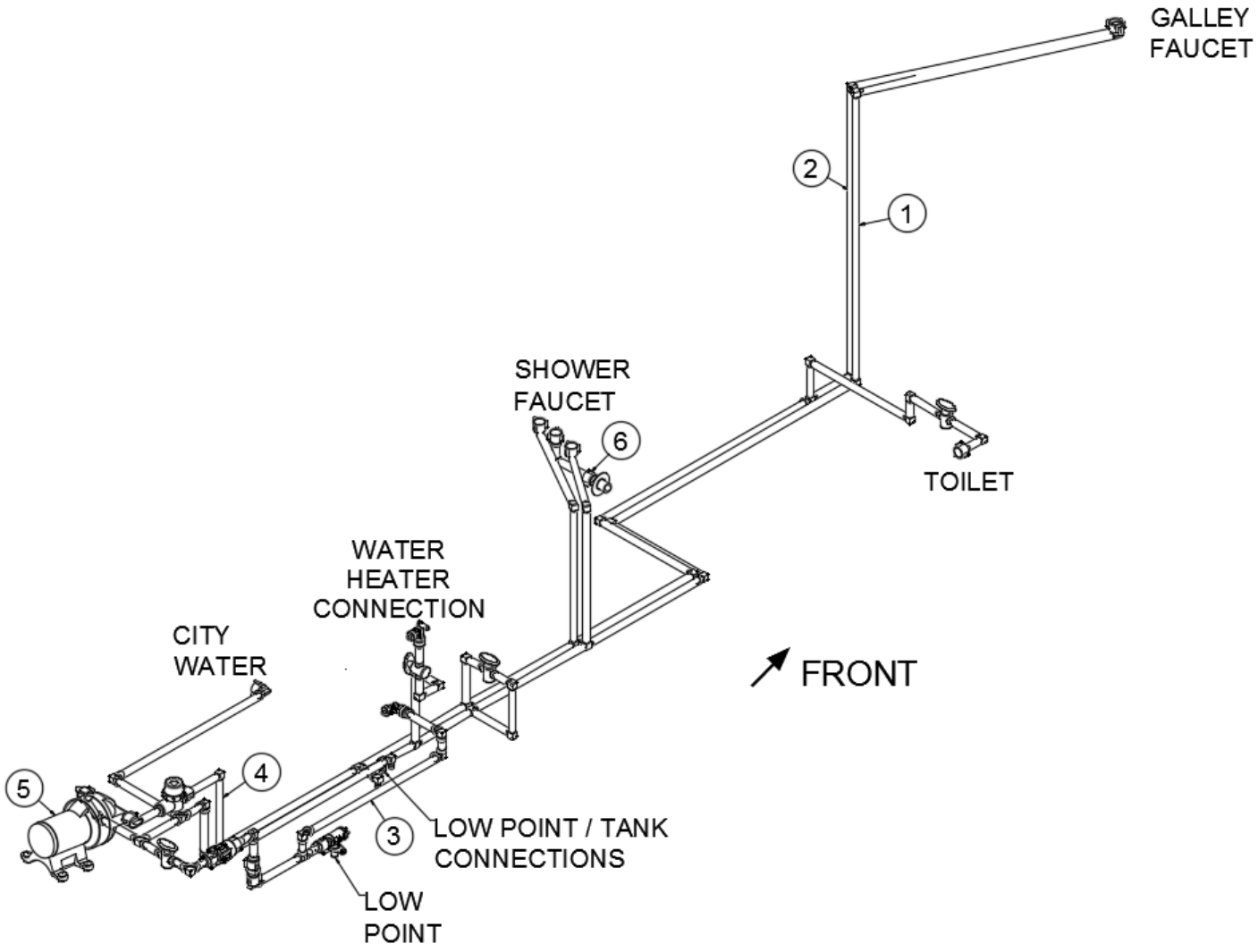


| | |
|---|---|
| 943812 | Fresh Water Layout |
| 1. 943812-1 | RS hot |
| 2. 943812-2 | RS forward cold |
| 3. 943812-7 | RS aft cold |
| 4. 943812-4 | Pump feed |
| 5. 943812-5 | Shower valve |
| 6. 943812-6 | Truma Bypass |

# 2022 BASECAMP
## PLUMBING, FRESH WATER SYSTEM

### Fresh Water Lines, BC20

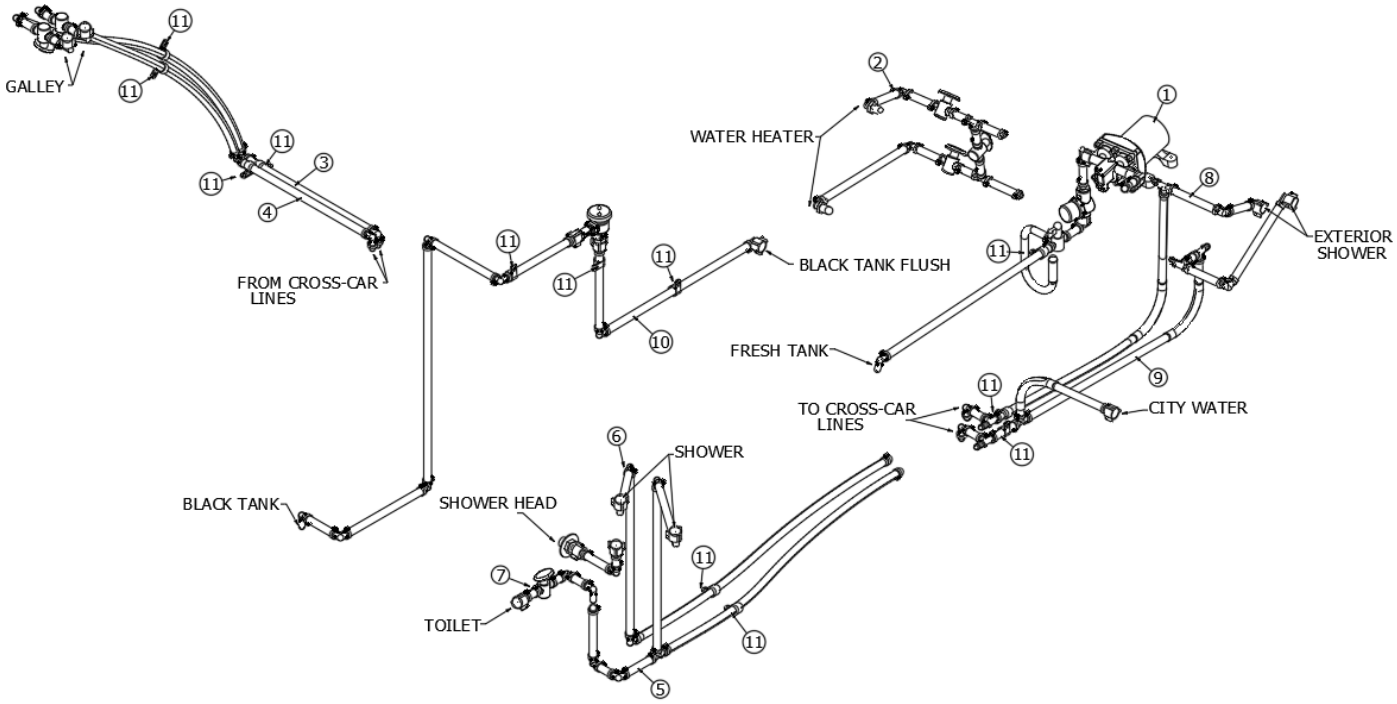


| | | |
|---|---|---|
| 1. | 943936-1 | Layout-Fresh Water Pump BC20 |
| 2. | 943936-2 | Layout-Water Heater Bypass BC2 |
| 3. | 943936-3 | Layout-Galley Hot BC 20 |
| 4. | 943936-4 | Layout-Galley Cold BC 20 |
| 5. | 943936-5 | Layout-Wet Bath - Cold BC 20 |
| 6. | 943936-6 | Layout-Wet Bath - Hot BC 20 |
| 7. | 943936-7 | Layout-Toilet Supply BC 20 |
| 8. | 943936-8 | Layout-Supply Hot BC 20 |
| 9. | 943936-9 | Layout-Supply - Cold BC 20 |
| 10. | 943936-10 | Layout-Black Tank Flush |
| 11. | 340085-06 | Clamp, Loop, Steel W/Rubber,.75 Dia |
| 12. | 601698-15 | 1/2 Crimp Ring #14785 |

# 2022 BASECAMP
## PLUMBING, FRESH WATER SYSTEM

### Winterization Kit

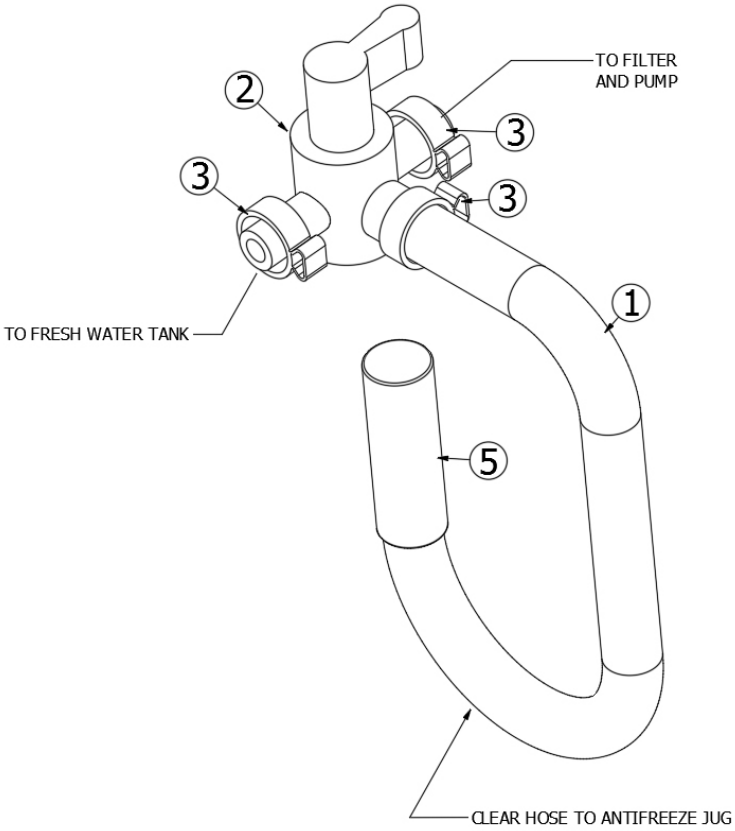


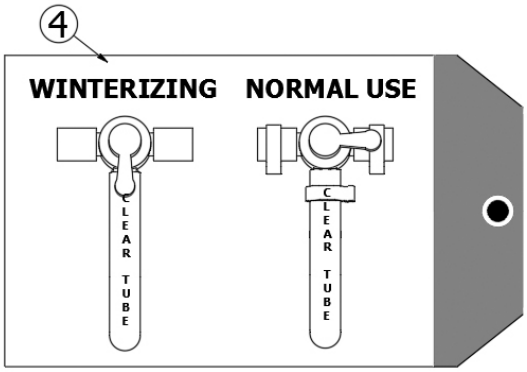


| | |
|---|---|
| 112814 | Winterization Kit Installation |
| 1. 601240-01 | Tubing 1/2 I.D. x 3/32 Wall Thick |
| 2. 602711 | Valve-3 Way Bypass .5" PEX #32788 |
| 3. 601698-15 | 1/2 CRIMP RING #14785 |
| 4. 365453 | Tag-Instruction - Winterization Kit |
| 5. 602801 | Cap, 5/8” ID, Winterization Kit |

# 2022 BASECAMP
## PLUMBING, DRAIN SYSTEM

### Sink and Shower

| | |
|---|---|
| 602877 | Sink 7" Hamat Hot-18rt SS 18GA |
| 204275 | Cover-Sink- 16 & 20 Basecamp (Black) |
| 601813 | Tail piece, Lift and turn drain |
| 203829 | Shower pan |
| 600594-02 | Shower drain w/Black strainer |

### Black and Gray Tank, BC16

| | |
|---|---|
| 601607-07 | Termination Cap - 3" Bay |
| 600820 | 3"Single Socket 90degree |
| 601607-06 | Term. Adaptor - 3” HUB x 3” Bay |
| 601607-14 | Valve Assy-3" Spig x 3" Spig #T40A |
| 455707 | Ass'y - Gray Tank Pan |
| 511780 | Pad-Tank Heating 6.5" x 18" CNTH618A |
| 602431 | Tank - Black/Gray Combo |
| 200507 | Styrofoam, 1” x 25” x 55”, Watertight |

### Black and Gray Tank, BC20

| | |
|---|---|
| 455711 | Tank Pan - Gray Water |
| 511780 | Pad-Tank Heating 6.5" x 18" |
| 602446 | Tank-Gray Water |
| 455710 | Tank pan, Black water |
| 602447 | Tank-Black Water |

### Black Tank Flush

| | |
|---|---|
| 601441-02 | Black tank flush |
| 601441-02-01 | Water inlet |
| 601441-101 | Black cap w/strap |
| 601441-102 | Brass vacuum breaker and valve |
| 365477 | Decal - Black Tank Flush |

# 2022 BASECAMP
## PLUMBING, DRAIN SYSTEM

### Drain System, BC16

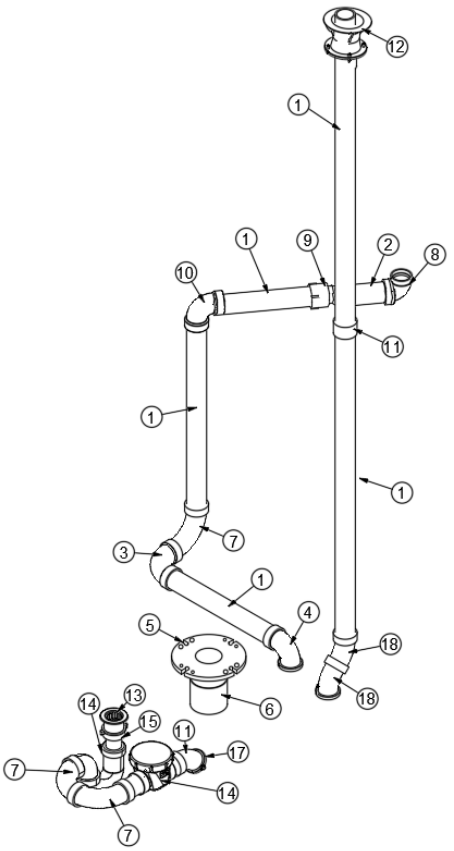


| | |
|---|---|
| 943933 | Layout, Drainage System |

| | | |
|---|---|---|
| 1. | 601160-02 | ABS Pipe, 1.5IN. |
| 2. | 690603-01 | Valve-Waste #92010 |
| 3. | 600035 | Elbow, 1.5 IN. XLT 90 Degree |
| 4. | 600662 | 1 1/2” Elbow, Short Radius |
| 5. | 601266 | Flange, Closet, 3IN HUB X 4IN HORN HUB, Slip Fitting |
| 6. | 601267-04 | Nipple 3” DIA. THD ONE 10” LG |
| 7. | 600431 | ST. Elbow, 1.5IN. XLT 90 Degree |
| 8. | 690603-02 | Adapter-Angle #92000 |
| 9. | 600308 | Adapter ABS Female Sloan #2891 |
| 10. | 601636 | Elbow 1-1/2” 90DEG |
| 11. | 600227 | Coupling,1.5 IN. Plastic |
| 12. | 690700-01 | Cap-Tank Vent White #54062 |
| 13. | 600594-02 | Drain, Shower with strainer |
| 14. | 602720 | Valve-Sanitary Check 1.5" ABS |
| 15. | 602164-01 | P Trap W/Compression Nut 1.5" |
| 16. | 602164-02 | Tailpiece W/Nuts & Washers 1.5 |
| 17. | 340084-28 | Clamp, Hose - Size 2-1/4IN |
| 18. | 600027 | Elbow ABS Long ST 45 Degrees |

# 2022 BASECAMP
## PLUMBING, DRAIN SYSTEM

### Drain System, BC20

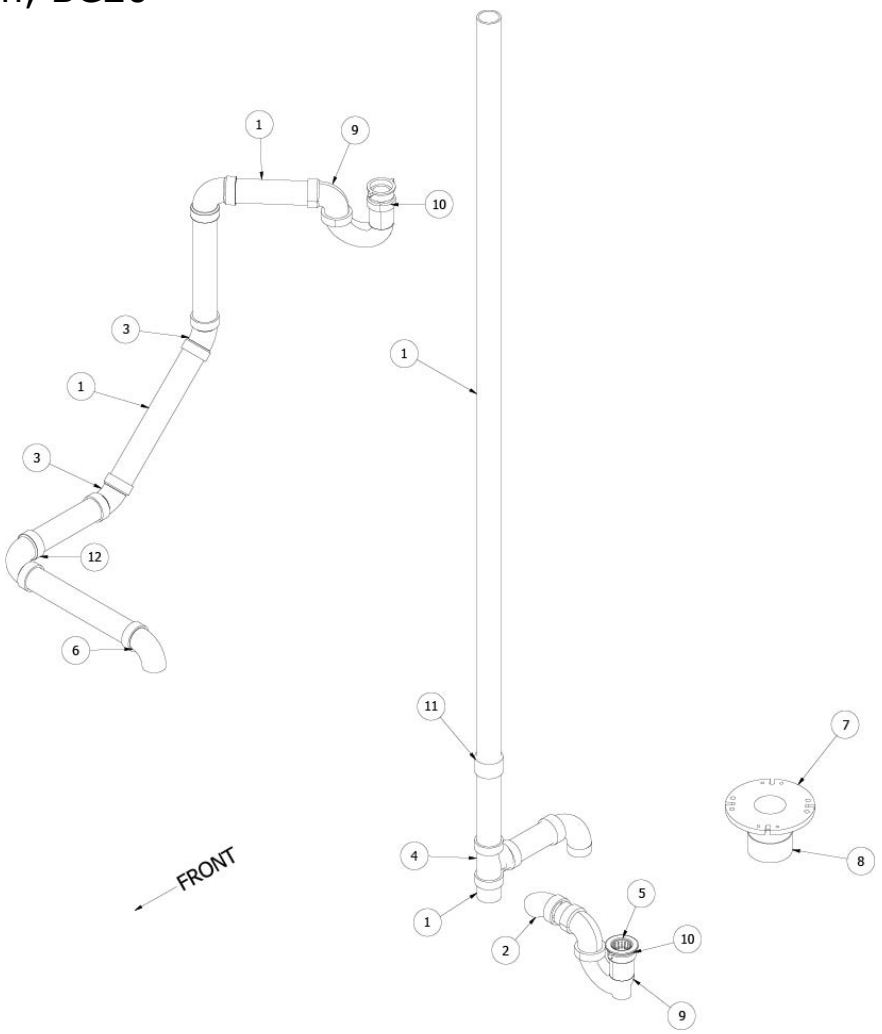


| | | |
|---|---|---|
| | 943934 | Drainage System Layout |
| 1. | 601160-02 | ABS Pipe, 1.5IN. |
| 2. | 600027 | Elbow ABS Long St 45 Degrees |
| 3. | 600030 | ELL- ABS 45 Degrees LG Turn |
| 4. | 600156 | Tee, Sanitary 1.5IN x 1.5IN. x 1.5IN |
| 5. | 600594-02 | Drain, Shower with strainer |
| 6. | 600662 | 1 1/2” Elbow, Short Radius |
| 7. | 601266 | Flange, Closet, 3in Hub x 4in Horn Hub, Slip Fitting |
| 8. | 601267-04 | Nipple 3” Dia. Thd One 10” LG |
| 9. | 602164-01 | P Trap W/Compression Nut 1.5" |
| 10. | 602164-02 | Tailpiece W/Nuts & Washers 1.5" |
| 11. | 600227 | Coupling, 1.5” |
| 12. | 600035 | Elbow, 90-degree, long sweep |
| | 601636 | Elbow, 90-degree, short sweep |
| | 600431 | Elbow, 90-degree, Street |

# 2022 BASECAMP
## PLUMBING, DRAIN SYSTEM

### Toilet

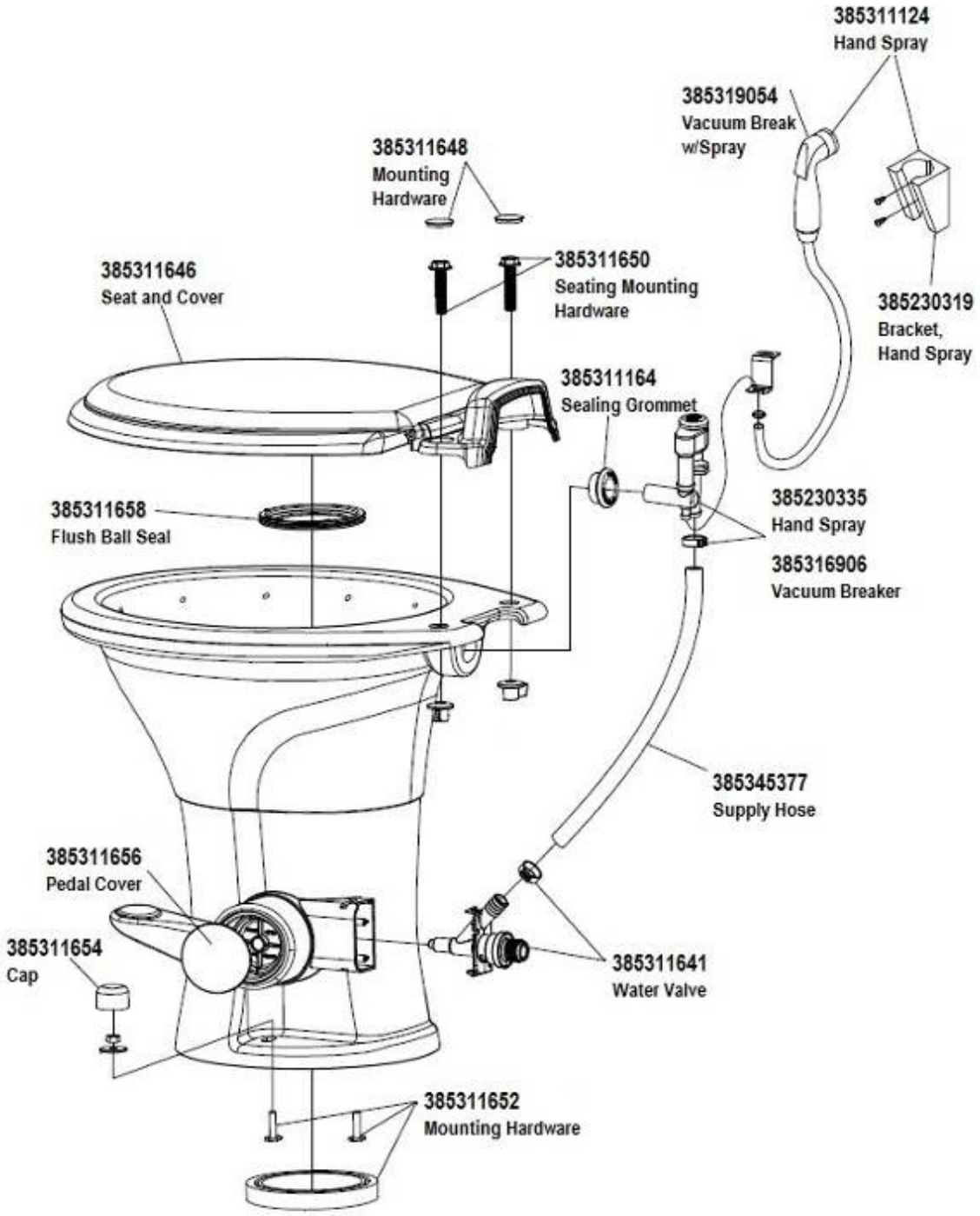


Part numbers in drawing are Dometic

| | |
|---|---|
| 690621-BOX | Toilet, China, Dometic |
| 601266 | Toilet flange, Slip fit |

# 2022 BASECAMP
## PLUMBING, DRAIN SYSTEM

### Dump Valve Install, BC16

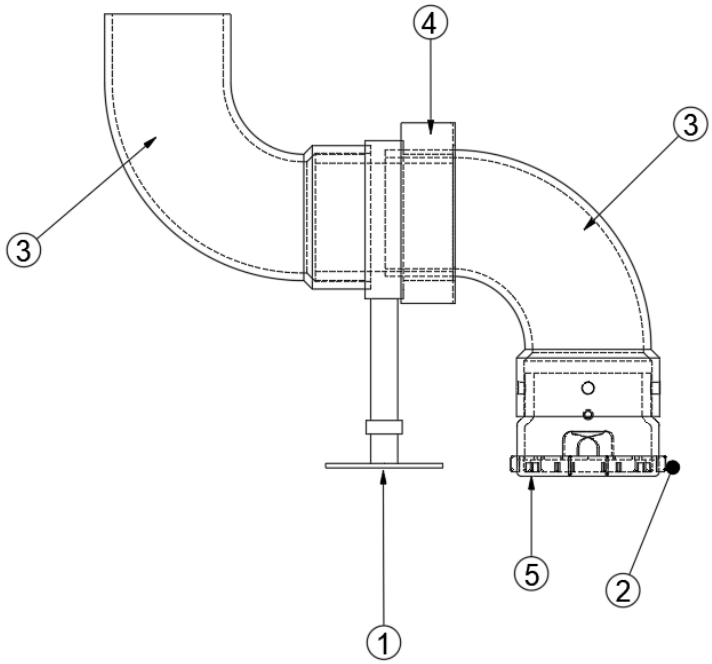


| | |
|---|---|
| 1. 601607-07 | Termination Cap - 3" BAY |
| 2. 115852 | Bracket-Dump Valve Bracket - Lower |
| 3. 600820 | 3” Single Socket 90 degree |
| 4. 601607-06 | Term. Adaptor - 3” HUB x 3” BAY |
| 5. 601607-14 | Valve Assy-3"SPIG x 3"SPIG #T40A |

# 2022 BASECAMP
## PLUMBING, DRAIN SYSTEM

### Dump Valve Install, BC20

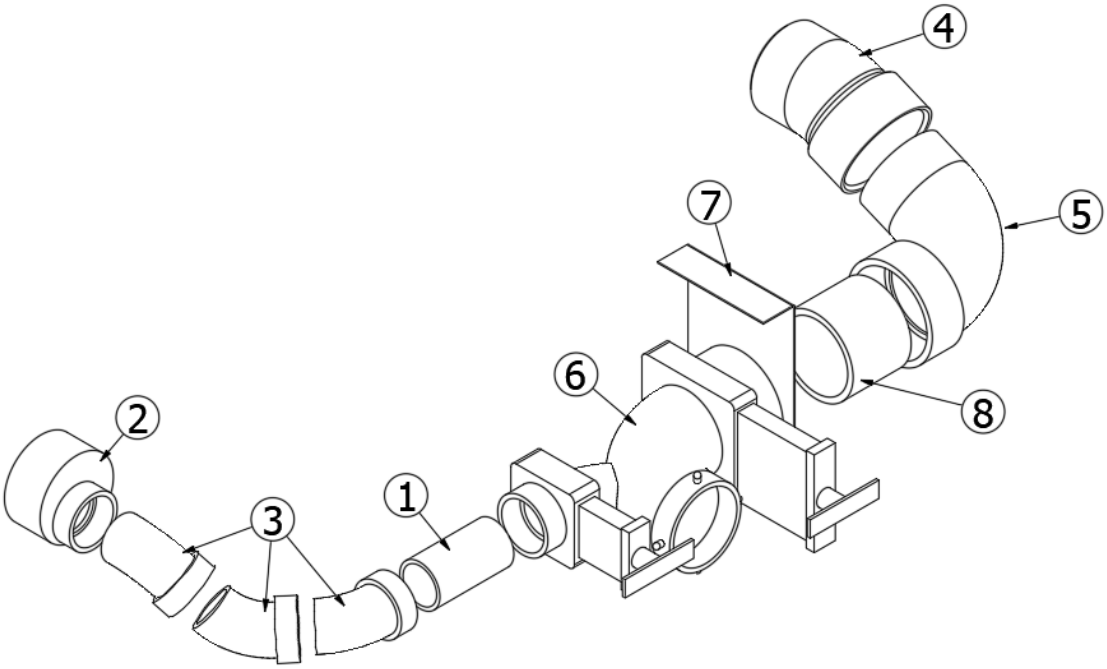


| | |
|---|---|
| 1. 601160-02 | ABS Pipe, 1.5IN. |
| 2. 195329-229 | Reducer Adaptor 3" TO 1.5" 40740 |
| 3. 600027 | Elbow ABS Long ST 45 Degrees |
| 4. 601403 | Elbow, ST. 22.5 Degrees 3IN ABS |
| 5. 601531 | Fitting-90 Degree 3" H X ST |
| 6. 601482 | Dump Valve Rotating Assy. |
| 7. 114916 | Bracket Dump Valve |
| 8. 601160-04 | ABS Pipe, 3IN. |

# 2022 BASECAMP
## PLUMBING, HEATING SYSTEM

### Heat System, BC16

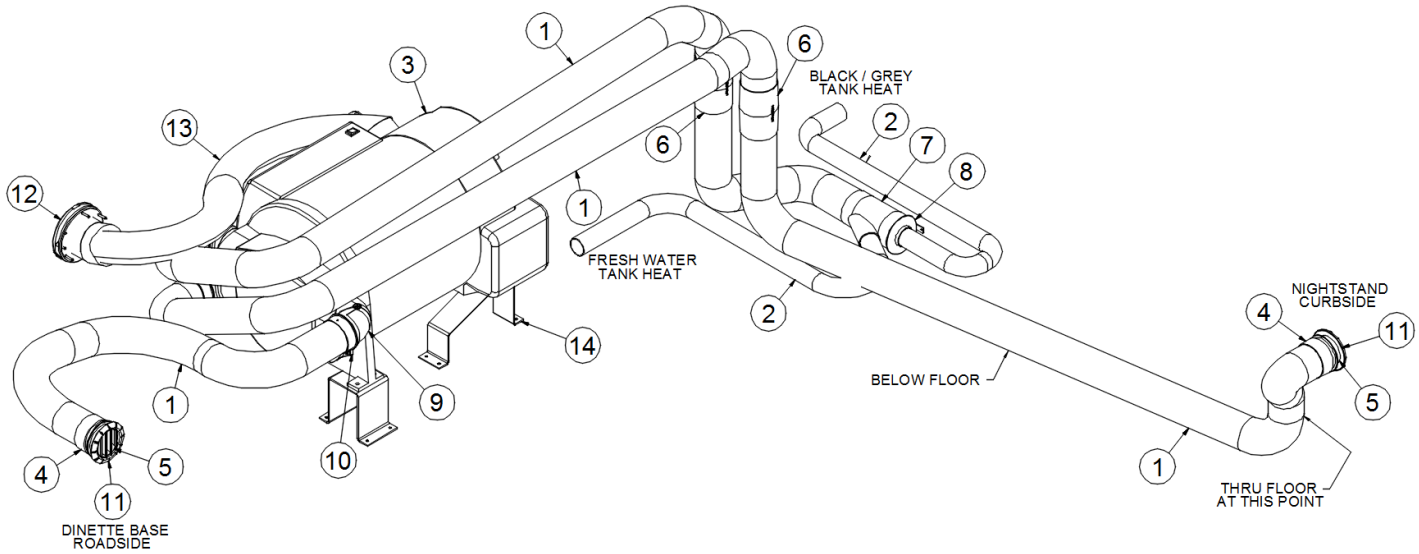


| | | |
|---|---|---|
| | 943813 | Heat System |
| 1. | 690704-28 | Truma duct, 65mm |
| 2. | 690704-07 | Truma duct, 35mm |
| 3. | 690705 | Truma Combi Eco Plus |
| 4. | 690704-09 | End outlet nut |
| 5. | 690704-10 | End outlet, Black |
| 6. | 690704-11 | Straight coupling |
| 7. | 690704-12 | Branch wye, 35mm |
| 8. | 690704-13 | Reducer, 35mm |
| 9. | 690704-14 | Elbow, 90° |
| 10. | 690704-15 | Blank cover |
| 11. | 690704-18 | Lamella insert, Black |
| 12. | 690704-26 | Cowl-Wall Inner |
| | 690704-27 | Cowl-Wall Outer Part Black |
| 13. | 690704-04 | Air supply tube, 80mm |
| 14. | 455132 | Support brackets |
| | 690704-05 | Exhaust duct, 55mm |
| | 690704-29 | Duct insulation sleeve, 6” |
| | 690704-2400 | Cover, CP Plus |

# 2022 BASECAMP
## PLUMBING, HEATING SYSTEM

### Heat System, BC20

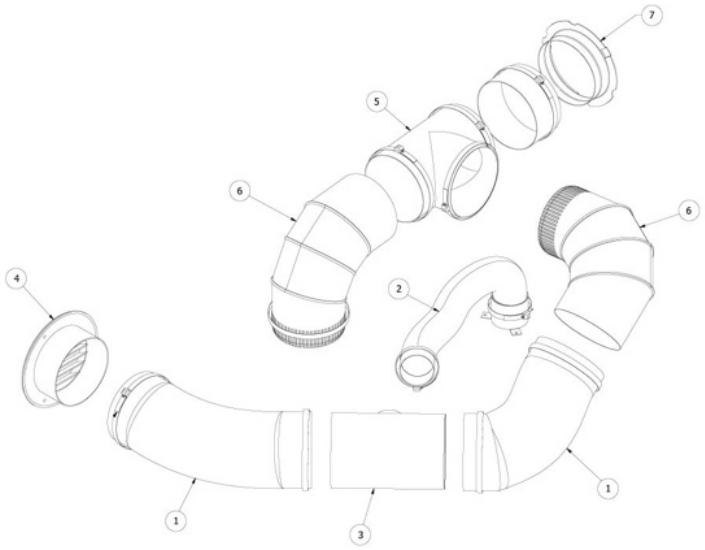


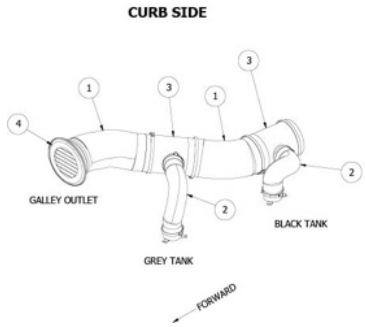


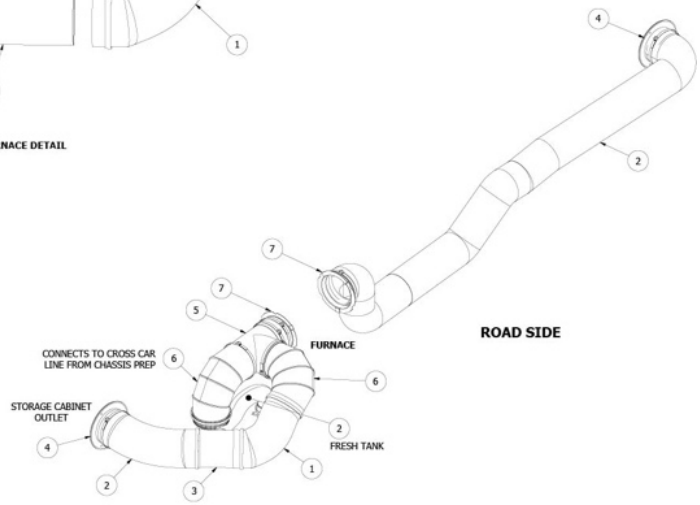


| | | |
|---|---|---|
| | 113252 | Heat Duct Install |
| 1. | 600247 | Hose - 4" Heat Duct Round Flex |
| 2. | 600193 | 2"Duct Thermaflex Flexible Air |
| 3. | 601348 | Tee, Heat Duct, 4 x 4 x 2 |
| 4. | 602394-03 | Register-Black 4" #HV4BK |
| 5. | 601338-01 | Tee, Heat duct, 4 x 4 x 4 |
| 6. | 382705 | Elbow, 90 degree, 4” adjustable |
| 7. | 600526 | Duct flange, 4” |
| | 340084-28 | Clamp, Hose - Size 2-1/4IN |
| | 340084-60 | Clamp, Hose - Size 4-1/4IN |
| | 600184 | Fitting- 2" Heat Duct |

# 2022 BASECAMP
## SEALERS, GASKETS

### Sealers

| | |
|---|---|
| 360255-04 | Sealer, Anti-wick |
| 360001 | Sealant, Butyl |
| 365330-01 | Sealant, Adseal, White |
| 365330-02 | Sealant, Adseal, Gray |
| 365330-03 | Sealant, Adseal, Aluminum Gray |
| 365330-04 | Sealant, Adseal, Black |

### Gaskets

| | |
|---|---|
| 365495 | Gasket Kit - BC 20 |
| 381665 | Gasket, D-seal, Black |
| 382337 | Gasket, Corlon vent cap |
| 382742 | Gasket kit, Water heater and closeout |
| 365001 | Tape, double coated foam |
| 685510 | Seam tape, Black 1/32” x 7/8” x 200 |
| 365222-01 | Tape double coated, .08 x .75" |
| 382499 | Gasket kit |
| 382499-01 | Exhaust fan gasket |
| 382499-02 | Exterior shower gasket |
| 382499-03 | Gravity water fill |
| 382499-04 | Receptacle gasket |
| 382499-05 | City water fill gasket |
| 382499-06 | Battery vent gasket |
| 382499-07 | Rear door hinge gasket |
| 203594-04 | Ceiling trim, Black |

# 2022 BASECAMP
## UPHOLSTERY

### Dinette Seat Cushions, BC16

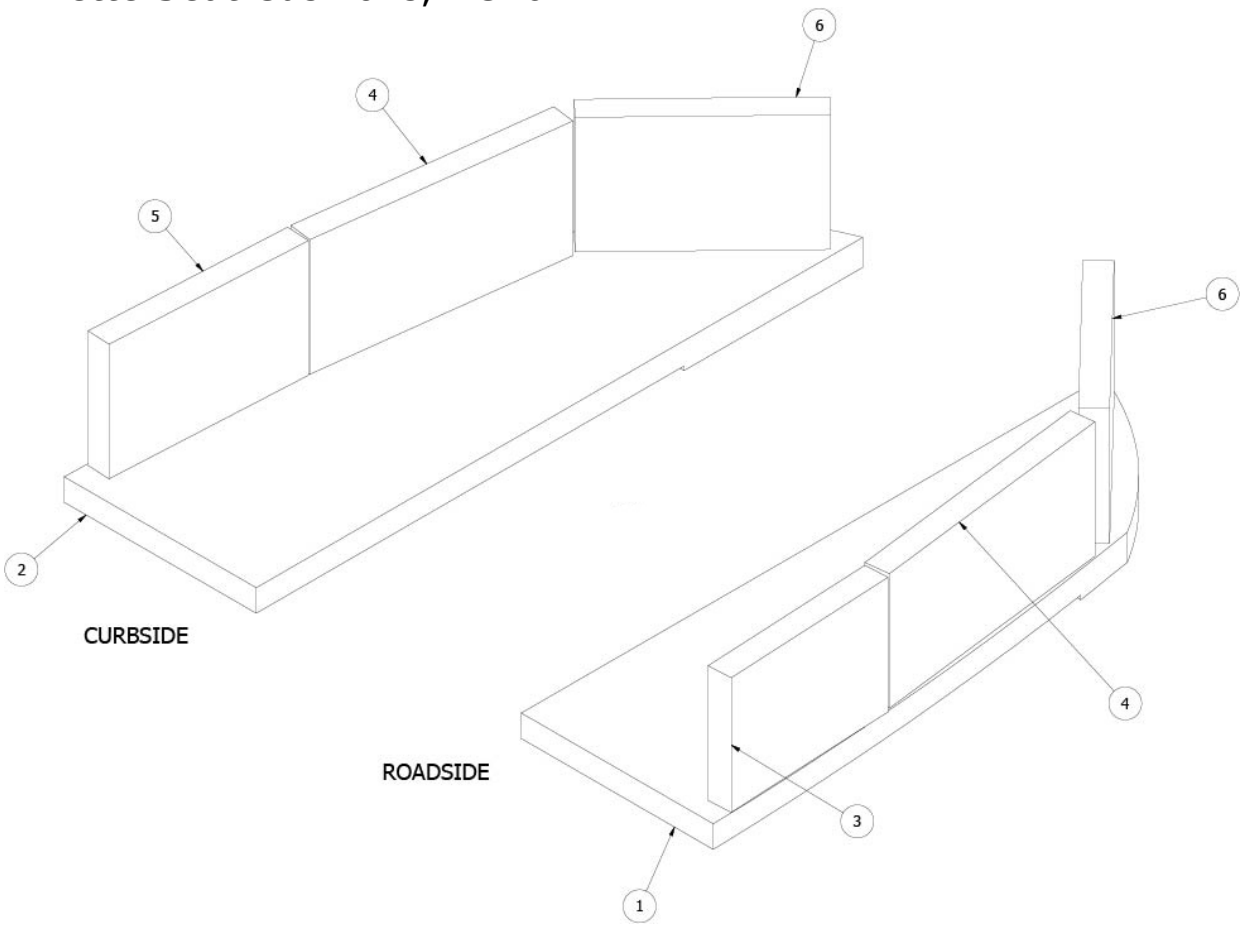


| | |
|---|---|
| 704743-01 | Kit, Din Cushion, Glacier Lake |
| 704743-02 | Kit, Din Cushion, Forest Ridge |
| 704743-03 | Kit, Din Cushion, Red Rock |
| 704742 | Kit, Foam Cushion, Dinette |

| | |
|---|---|
| 1. 704742-01 | Foam - Seat RS |
| 2. 704742-02 | Foam - Seat CS |
| 3. 704742-03 | Foam - Backrest, RS |
| 4. 704742-04 | Foam - Backrest, RS & CS |
| 5. 704742-05 | Foam - Backrest, CS |
| 6. 704742-06 | Foam - Backrest, Rear |

# 2022 BASECAMP
## UPHOLSTERY

### Front Dinette Seat Cushions, BC20

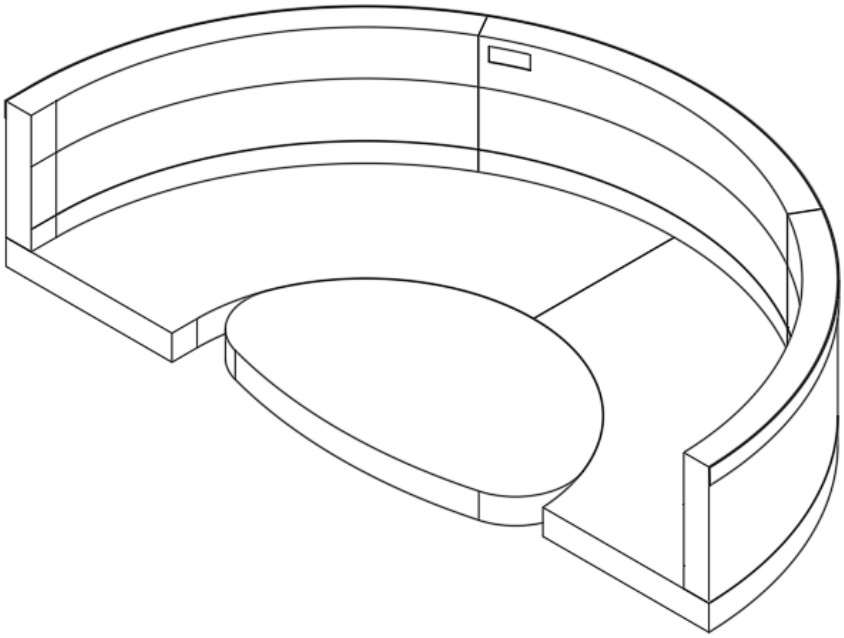

| | |
|---|---|
| 704744-01 | Kit-Foam/Cushion Glacier Lake BC 20 |
| 704744-02 | Kit-Foam/Cushion Forext Ridge BC 20 |
| 704744-03 | Kit-Foam/Cushion Red Rock BC 20 |

### Rear Dinette Seat Cushions, BC20

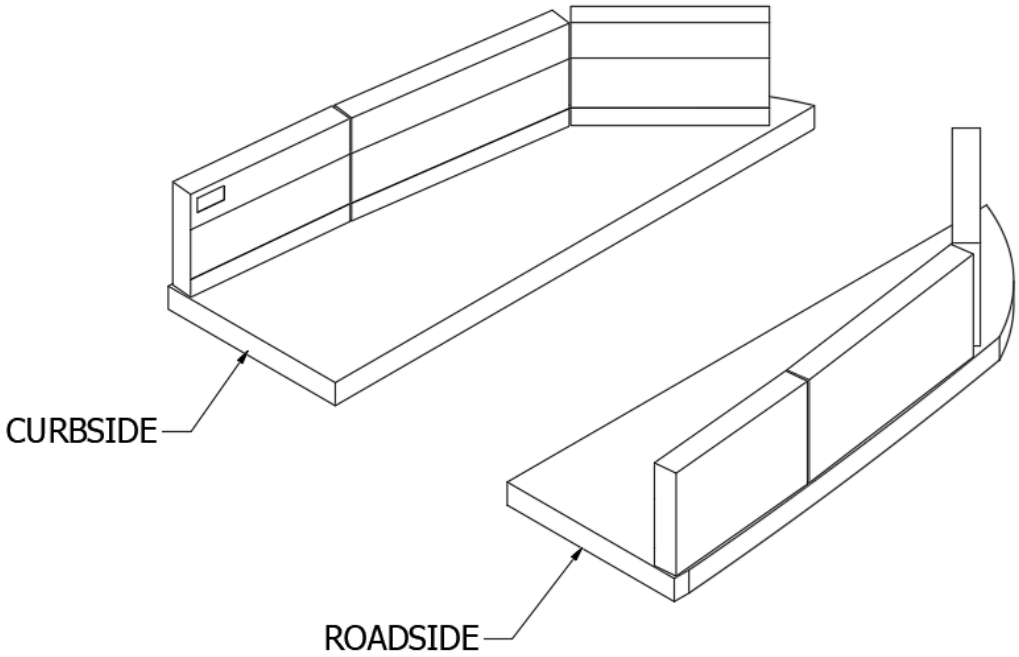


| | |
|---|---|
| 704745-01 | Kit Foam/Cushion Rear Dinette - Glacier Lake 2.0 |
| 704745-02 | Kit Foam/Cushion Rear Dinette - Forest Ridge |
| 704745-03 | Kit Foam/Cushion Rear Dinette - Red Rock |

# 2022 BASECAMP
## UPHOLSTERY

### Décor Boards, Forest Ridge

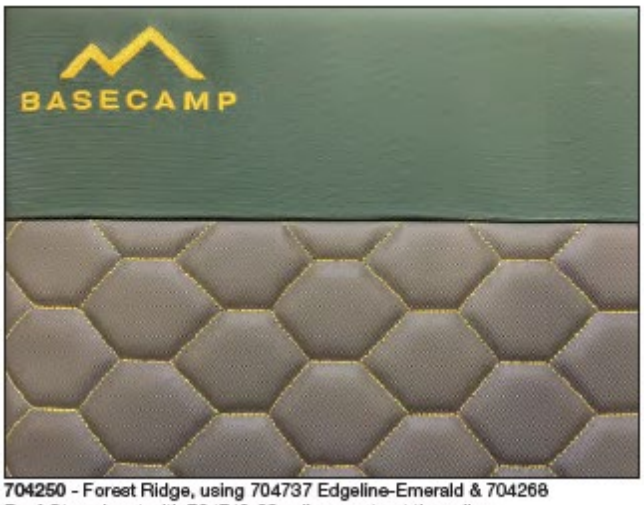


**704250** - Forest Ridge, using 704737 Edgeline-Emerald & 704268 Reef-Stone inset with 704740-02 yellow contrast threading
Where used: Seating

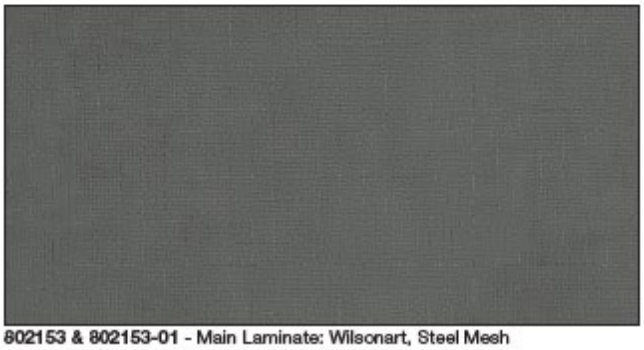

**802153 & 802153-01** - Main Laminate: Wilsonart, Steel Mesh
Where used: Exterior of Lavy Walls & Countertops

**802078-01** - Accent Laminate: Decotone, Colosseum Oak Pearl
Where used: Vertical grade of Galley, Walls, Seating Base under cushions

**704547** - Vinyl Flooring: Beau Flor, Liana
Where used: Flooring

**115754-03, 115755-03, 115767-03, 115768-03** - Cargo Bars
Where used: Overhead Cargo Bars with mesh (4 sizes)

# 2022 BASECAMP
## UPHOLSTERY

### Décor Boards, Glacier Lake

**704250** - Glacier Lake, using 704541 Silvertex Jet & 704268 Reef-Stone inset with 704740-01 orange contrast threading
Where used: Seating

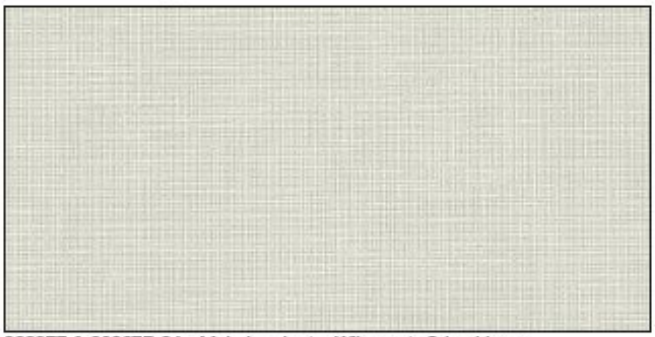

**802077 & 802077-01** - Main Laminate: Wilsonart, Crisp Linen
Where used: Exterior of Lavy Walls & Countertops

**802078-01** - Accent Laminate: Decotone, Colosseum Oak Pearl
Where used: Vertical grade of Galley, Walls, Seating Base under cushions

**704547** - Vinyl Flooring: Liana
Where used: Flooring

**115754-04, 115755-04, 115767-04, 115768-04** - Cargo Bars
Where used: Overhead Cargo Bars with mesh (4 sizes)

# 2022 BASECAMP
## UPHOLSTERY

### Décor Boards, Red Rock

**704250** - Red Rock, using 704235 Simtex-Carbon & 704268 Reef-Stone inset with red contrast threading
Where used: Seating

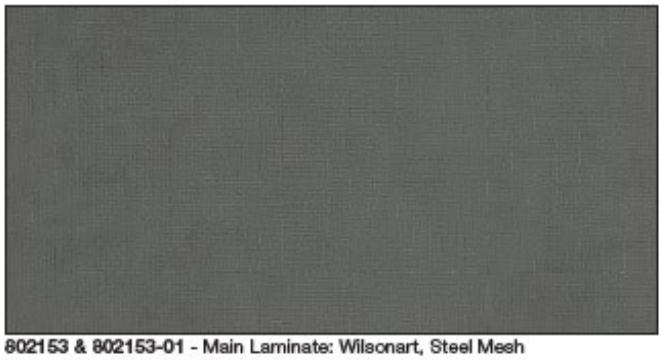

**802153 & 802153-01** - Main Laminate: Wilsonart, Steel Mesh
Where used: Exterior of Lavy Walls & Countertops

**802078-01** - Accent Laminate: Decotone, Colosseum Oak Pearl
Where used: Vertical grade of Galley, Walls, Seating Base under cushions

**704547** - Vinyl Flooring: Liana
Where used: Flooring

**115754-02, 115755-02, 115767-02, 115768-02** - Cargo Bars
Where used: Overhead Cargo Bars with mesh (4 sizes)

# 2022 BASECAMP
## VENTS, FANS

### Vent, Battery

| | |
|---|---|
| 203638-01 | Vent, Cone, White |
| 203638-02 | Grille, White |
| 382499-06 | Battery vent gasket |

### Vent, Black Tank

| | |
|---|---|
| 690700-01 | Vent pipe cover, White |
| 382337 | Gasket, Corlon, Vent Cap |

### Vent, Roof

| | |
|---|---|
| 690266-01 | Power ventilator w/2” garnish |
| 690266-07 | Trim ring, White |
| 690266-08 | Trim ring, Silver |
| 690266-09 | Ring, Power ventilator, White |
| 690266-100 | Motor |
| 690266-101 | Fan blade |
| 690266-103 | Handle, Polar White |
| 690266-0400 | Motor and inline fuse |

### Exhaust Fan

| | |
|---|---|
| 512538-01 | Vent, Exhaust only, Manual, Gray |
| 512538-010 | Screen |
| 512538-011 | Crank handle |
| 512538-101 | Motor |
| 512538-102 | Seal kit |
| 512538-103 | Rotary switch |
| 382537 | Ventadome- Nonpower BC |
| 382499-01 | Exhaust fan gasket |

# 2022 BASECAMP
## PANELING, EDGEBANDING, LAUAN

### Paneling

| | |
|---|---|
| 802224 | Pre-laminate Colosseum Oak Pearl Raw |
| 802291 | Panel-Pre-laminate Frosty/Crisp 12MM |
| 802153 | Laminate, Horizontal, Steel Mesh |
| 802153-01 | Laminate, Vertical, Steel Mesh |
| 802077 | Laminate, Horizontal, Velvet texture, Crisp Linen |
| 802077-01 | Laminate, Vertical, Velvet texture, Crisp Linen |
| 802078-01 | Laminate, Vertical, Colosseum Oak Pearl |
| 801392 | Pre-lam panel, 12mm, White liner/White Liner |
| 802092 | Pre-lam panel, 12mm, Colosseum Oak/White Liner |
| 802120 | Pre-lam panel, 12mm, Colosseum Oak/Colosseum Oak |
| 802090 | Pre-lam panel, 18mm, Crisp Linen/White Liner |
| 802121 | Pre-lam panel, 18mm, Colosseum Oak/White Liner |
| 802154 | Pre-lam panel, 18mm, Steel Mesh/White Liner |
| 802292 | Panel-Pre-laminate Frosty/Steel. Mesh 12MM |
| 801809 | Laminate, Vertical, White Liner |
| 802541 | Panel-12MM Crisp Linen/White Liner |
| 801368 | Pre laminate, White liner/White liner 18mm (4' x 8' Sheet) |
| 802540 | Pre laminate, 12MM Steel Mesh/White Liner |

### Edgebanding

| | |
|---|---|
| 365386-01 | Edgebanding, .63", Linen |
| 365386-02 | Edgebanding, .94", Linen |
| 365395-02 | Edgebanding,.94" Crisp Linen |
| 365464-02 | Edgebanding, .94", Crisp Linen |
| 365411-02 | Edgebanding, .94", Steel Mesh |
| 365465-02 | Edgebanding, 2MM - 15/16" Steel Mesh |
| 365395-01 | Edgebanding, 1MM 5/8" Crisp Linen |
| 365499-01 | Edgeband-5/8" Colosseum Oak |
| 365411-01 | Edgebanding, 1MM Steel Mesh 5/8 |

### Lauan

| | |
|---|---|
| 800507-02 | Panel, Lauan, ¼” x 4’ x 8’, raw/raw |

## Plywood

| | |
|---|---|
| 800976-01 | Plywood, tongue and groove, 19/32’ (floor) |
| 801351 | Plywood, Lite, 18MM (.75") 4' x 8' |

# 2022 BASECAMP
## TRIMS

Trim

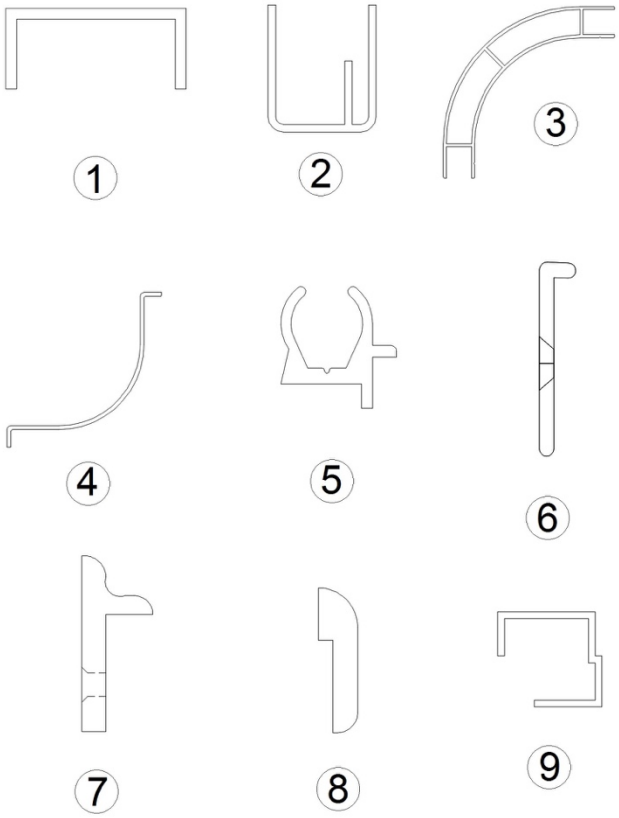


| | | |
|---|---|---|
| 1. | 115730 | C-extrusion, Interlocking |
| 2. | 115665 | Door frame extrusion |
| 3. | 115682 | Extrusion, 3” radius corner |
| 4. | 115683 | Extrusion, 2” radius inside corner |
| 5. | 115686 | Extrusion, Keder rail |
| 6. | 115134 | Extrusion, Laminate trim |
| 7. | 115064 | Trim, Aluminum countertop |
| 8. | 203837 | Trim, PVC lower, Black |
| 9. | 115734 | U-extrusion, Interlocking |
| | 203445 | T-molding, 9/16”, Black |
| | 203440 | T-molding, Flexible plastic, Black |
| | 203710 | T-molding, Flexible plastic, Almond |
| | 203941-01 | Molding-5 7/8" Putty Gray (Crisp Linen) |
| | 203942-01 | Molding-T 13/16 Storm Gray |
| | 203138-06 | Wall Extrusion-Plas Ash Gray |
| | 381610-01 | Cover Cap Plas. European White |