AIRSTREAM®

Roll With The Best®

SCAN ME

Owner's Manual

2023 INTERSTATE 24

INTERSTATE 24™

With E1 Package

WARNING

Operating, servicing and maintaining a passenger vehicle or off-road vehicle can expose you to chemicals including engine exhaust, carbon monoxide, phthalates, and lead, which are known to the State of California to cause cancer and birth defects or other reproductive harm. To minimize exposure, avoid breathing exhaust, do not idle the engine except as necessary, service your vehicle in a well-ventilated area and wear gloves or wash your hands frequently when servicing your vehicle. For more information go to www.P65Warnings.ca.gov/passenger-vehicle

Disclaimer And Copyright

All information, illustrations and specifications contained in this manual are based on the latest product information available at the time of publication approval. If and when new materials and production techniques are developed that can improve the quality of its product, or material substitutions are necessary due to availability, Airstream reserves the right to make such changes.

Airstream Interstate 24 Owner's Manual

©2022 Airstream, Inc. All rights reserved

Publication Date: November 2022

REV# 03

AIRSTREAM®

TABLE OF CONTENTS

INTRODUCTION 1-1
SAFETY 2-1
Safety Precautions 2-2
Chemical Sensitivity and Ventilation 2-2
Alarms and Detectors 2-3
Diesel Exhaust 2-7
Fire Extinguisher 2-7
Emergency Exits 2-8
GENERAL INFORMATION 3-1
Limited Warranty Policy 3-2
Service 3-6
Camping 3-7
FLOOR PLANS AND SPECIFICATIONS 4-1
Floor Plans 4-2
Specifications 4-3
INTERIOR 5-1
General Information and Cleaning 5-3
Electrical System Overview 5-7
Electrical System Operation 5-11
Entertainment Systems 5-20
Appliances 5-22
EXTERIOR 6-1
Exterior Care 6-2
Waxes and Polishes 6-2
How to Care for Your Touring Coach Finish . . 6-2
Roadside Exterior Components (GL) 6-4
Curbside Exterior Components (GL). 6-5
Roadside Exterior Components (GT) 6-6
Curbside Exterior Components (GT) 6-7
Exterior Features 6-8
Hitch Cover 6-11
Awning 6-11
Screen Doors 6-13
SPRINTER VAN 7-1
Important Sprinter Information 7-2
Component Identification 7-2
Tires 7-3
Changing A Tire 7-5
Installing and Removing A Wheel 7-6
Tire Rotation 7-7
Air Ride Suspension 7-9
DRIVING 8-1
Loading 8-2
Safety 8-4
Trailer Towing and Driving Tips 8-5
Towing a Trailer 8-6
Towing Your Touring Coach 8-9
Safety Check List 8-10
MAINTENANCE 9-1
Maintenance Schedule 9-2
Suggested Maintenance and Replacement Parts 9-3
Tire Care 9-5
Plumbing 9-6
Drain and Waste System 9-8
Winterizing and Storage 9-10
Electrical Diagrams 9-15
Solar Panel Wiring 9-28
Volta System Limitations 9-29
Fresh Water Layouts 9-31
FAQs and Answers 9-34

NOTES

AIRSTREAM®

Section 1
INTRODUCTION

The Owner's Manual for your new Airstream Touring Coach is designed to respond to the most frequent inquiries regarding the operation, function, and care of the many systems that make modern motorhoming a joy.

The Airstream Touring Coach is integrated into a Sprinter Van, designed and manufactured by Mercedes-Benz. Operation of the Sprinter, its engine, power train, and other related components are discussed in the Mercedes-Benz Sprinter Operator's Manual and other literature provided by Mercedes-Benz. Those systems discussed in the Sprinter literature are warrantied by Mercedes-Benz or their suppliers.

Airstream realizes our customers possess varying degrees of expertise in the area of maintaining and repairing the appliances in their touring coach. For this reason, the service and trouble-shooting information found in this manual is directed toward those with average mechanical skills. We also realize you may be more familiar in one area than you are in another. Only you know your capabilities and limitations.

We want you to use this manual, and hope you will find the information contained in it helpful; however, should you ever feel you may be "getting in over your head," please see your dealer to have the repairs made.

The operation and care of component parts such as, refrigerator, heating/hot water system, and others are briefly explained in this manual.

All information, illustrations, and specifications contained in this manual are based on the latest product information available at the time of publication approval. Airstream reserves the right to make changes if and when new materials and/or production techniques are developed that can improve the quality of its product, or when material substitutions are necessary due to availability.

We have provided many important safety messages in this manual. Always read and obey all safety messages.

WARNING

A warning is used for a hazardous situation which, if not avoided, could result in death or serious injury to persons.

CAUTION

A caution is used to advise caution when performing actions that could result in minor or moderate injury to persons and/or damage to equipment.

NOTE

A note is used to address practices not related to personal injury. This applies to hazardous situations involving property damage only.

Optional items may be available on all, or particular models. Additionally, some optional items can only be included during the manufacturing phase and cannot later be added to the touring coach. The inclusion of optional items information in this manual does not imply or suggest the availability, application, suitability, or inclusion for any specific unit.

NOTE

Your Mercedes-Benz Sprinter Van Operator's and Warranty Manuals contain important cautions, warnings, operational, and warranty information on the Sprinter and its components. All information in the Sprinter manual should be reviewed and followed for your safety. The Airstream Owner's Manual may provide additional information and tips on the use of the van as a touring coach; however, no information in the Airstream manual should be interpreted as advice or directions to disregard or void the warnings, cautions, or other information contained in the Sprinter's manuals.

NOTES

AIRSTREAM®

Section 2
SAFETY

SAFETY PRECAUTIONS 2-2
- Weight Distribution 2-2
- Tire Safety 2-2
- Electrical Appliances and Outlets 2-2
- Diesel Operated Systems 2-2
- Mold 2-2

CHEMICAL SENSITIVITY AND VENTILATION . . 2-2
- Chemical Sensitivity 2-2
- Formaldehyde 2-2
- Ventilation 2-3
- Do Not Smoke 2-3
- Medical Advice 2-3

ALARMS AND DETECTORS 2-3
- Smoke Alarm/Carbon Monoxide Detector. . . 2-3
  - Smoke Alarm 2-3
  - Batteries Low 2-4
  - This Carbon Monoxide Detector Is Not . . 2-4
  - Important Safety Precautions 2-4
- What Is Carbon Monoxide 2-5
  - Conditions that can result in potentially dangerous CO situations 2-5
- Symptoms of Carbon Monoxide Poisoning . . 2-5
- Regular Maintenance of Smoke/CO Detector . 2-6
  - Testing the Smoke/CO Detector 2-6

DIESEL EXHAUST 2-7
- Engine and Hydronic Heating and Hot Water System Safety 2-7

FIRE EXTINGUISHER 2-7

EMERGENCY EXITS 2-8
- Safety 2-8

Safety Precautions

Many things can be construed as safety related, but the most important is your common sense. If you are careless with matches, cigarettes, flammable material, or any other hazardous material, you surely realize your potential for accidents is greatly increased.

You will find many safety recommendations in this section and throughout the manual. The following recommendations are the ones we consider to be the most important.

Weight Distribution

Touring coach's have fresh water and waste water tanks, a water heater, and storage areas. It gives you great flexibility in loading. With flexibility comes responsibility. If you want to load down all the storage compartments, the amount of fluids may have to be reduced. It is a trade off so plan wisely. Distribute your additional cargo as evenly as possible with the heaviest objects located as low as possible. For detailed information on loading and weight distribution, see Loading on page 8-2.

Tire Safety

Properly maintained tires improve the steering, stopping, traction, and load-carrying capability of your vehicle. Be sure to read the Tire Safety information included in your vehicle Owner/Operator Manual. In addition, see Tire Care on page 9-5.

Electrical Appliances and Outlets

Improper handling of electrical components can be fatal. Do not touch or use electrical components or appliances with bare feet, while hands or feet are wet, or while standing in water or on damp ground.

Diesel Operated Systems

The hydronic heating/hot water system and touring coach engine run on diesel fuel. Do not start the hydronic system or the vehicle engine in closed garages or other enclosed or confined areas. For more information, see What Is Carbon Monoxide on page 2-5 and see Diesel Exhaust on page 2-7.

Mold

Mold and mold spores exist throughout indoor and outdoor environments. There is no practical way to eliminate all mold and mold spores in the indoor environment; however, the way to control indoor mold growth is to control moisture; see What factors contribute to mold growth on page 3-9

Chemical Sensitivity and Ventilation

Chemical Sensitivity

Immediately after the purchase of your new recreational vehicle and sometimes after it has been closed up for an extended period of time, you may notice a strong odor and/or experience a chemical sensitivity. This is not a defect in your recreational vehicle. Like your home, there are many different products used in the construction of recreational vehicles, such as carpet, linoleum, plywood, insulation, upholstery, etc. Formaldehyde is also the by-product of combustion and numerous household products, such as some paints, coatings, and cosmetics. However, recreational vehicles are much smaller than your home and therefore, the exchange of air inside a recreational vehicle is significantly less than in a home. These products, when new or when exposed to elevated temperatures and/or humidity, may off-gas different chemicals, including formaldehyde. This off-gassing, in combination with the minimal air exchange, may cause you to experience irritation of the eyes, nose, and throat, as well as sometimes headache, nausea, and a variety of asthma-like symptoms. Elderly persons and young children, as well as anyone with a history of asthma, allergies, or lung problems, may be more susceptible to the effects of off-gassing.

Formaldehyde

Formaldehyde is a naturally occurring substance and is an important chemical used widely by industries to manufacture building materials and numerous household products. It is also a by-product of combustion and certain other natural processes. Thus, it may be present inside the touring coach. Ventilation of the unit normally reduces the exposure to a comfortable level.

Trace levels of formaldehyde are released from smoking, cooking, use of soaps and detergents, such as carpet shampoos and cosmetics, and many other household products. Some people are very sensitive to formaldehyde while others may not have any reaction to the same levels of formaldehyde. Amounts released decrease over time.

Your Airstream touring coach was manufactured using low formaldehyde-emitting (LFE) wood products, the use of which is typical in the recreation vehicle industry. Formaldehyde has an important role in the adhesives used to bind wood products used in recreation vehicles. The wood products in your coach are designed to emit formaldehyde at or lower than industry guidelines and should not produce symptoms in most individuals.

While LFE wood products typically do not emit formaldehyde at a level that would cause symptoms in most individuals, it is possible, though not likely, for symptoms to occur when the touring coach is not properly ventilated. Ventilation is an essential requirement for touring coach use for many reasons. Any effects of formaldehyde can be greatly reduced by actions such as opening windows, opening roof vents, running the air conditioner, or some combination thereof. In addition, the emission of formaldehyde by these products naturally decreases rapidly over time.

Airstream strongly suggests you take measures to properly ventilate your touring coach on a regular basis. If you have any questions with respect to proper ventilation of your touring coach, please do not hesitate to contact your dealer or Airstream.

Ventilation

To reduce or lessen exposure to chemicals from off-gassing, it is of the utmost importance that you ventilate your recreational vehicle. Ventilation should occur frequently after purchase and at times when the temperatures and humidity are elevated. Remember, off-gassing is accelerated by heat and humidity. Open windows, exhaust vents, and doors. Operate ceiling and/or other fans, roof AC, and use a fan to force stale air out and bring fresh air in. Decreasing the flow of air by sealing the recreational vehicle increases the formaldehyde level in the vehicle's indoor air.

Do Not Smoke

It is recommended you do not smoke inside your recreational vehicle. In addition to causing damage to your recreational vehicle, tobacco smoke releases formaldehyde and other toxic chemicals.

Medical Advice

Questions regarding the effects of formaldehyde on your health should be submitted to your doctor or local health department.

Alarms and Detectors

Parts of this section on the combination Smoke/Carbon Monoxide Detector are a reprint of the manual included with the device and provided to you in the Airstream owner's packet.

Carefully read and understand the contents of the provided instruction manual before using the detector. Store the manual in a safe place for future reference. Pay particular attention to the safety warnings. Pass the manual on to any subsequent users of the alarm.

If you have not received the manual, contact your dealership to obtain one, or contact Airstream Customer Relations at 937-596-6111.

NOTE

Dangers, Warnings, and Cautions alert you to important operating instructions or to potentially hazardous situations. Pay special attention to these items.

Smoke Alarm/Carbon Monoxide Detector

Smoke Alarm

Power/Smoke LED: Flashes RED

Horn: 3 BEEPS, pause, 3 BEEPS, pause

CO LED: Off

Carbon Monoxide Alarm

CO LED: Flashes RED

Horn: 4 BEEPS, pause, 4 BEEPS, pause

Power/Smoke LED: Off

WARNING

If either alarm sounds, exit immediately and call the Fire Department. In the event of a carbon monoxide alarm, exit immediately and move everyone to a source of fresh air. Do not remove the batteries.

Batteries Low

The Smoke/Carbon Monoxide Detector will “chirp” once a minute for at least 30 days when the batteries are weak. The battery must immediately be replaced with a fresh one. The unit may beep briefly when you install the batteries. This is normal. The GREEN light flashes about every 60 seconds when the unit is receiving battery power.

WARNING

Smoke/Carbon Monoxide detectors have a limited life. The unit should be replaced immediately if it is not operating properly. You should always replace an alarm after 5 years from the date of purchase. Write the purchase date on the space provided on the back of unit.

WARNING

This product is intended for use in ordinary, indoor locations of family living units. It is not designed to measure compliance with occupational safety and health administration (OSHA) commercial or industrial standards. Individuals who are at special risk from Carbon Monoxide exposure by reason of age, pregnancy, or medical condition may consider using warning devices which provide audible and visual signals for Carbon Monoxide concentration under 30 ppm. If in doubt, consult your medical practitioner.

WARNING

Activation of your Carbon Monoxide alarm’s audible horn indicates the presence of Carbon Monoxide that can kill you. Leave the area immediately!

This Carbon Monoxide Detector Is Not

- Designed to detect any gas other than Carbon Monoxide.
- To be seen as a substitute for the proper servicing of fuel-burning appliances.
- To be used on an intermittent basis, or as a portable alarm for spillage of combustion products from fuel-burning appliances.

NOTE

This Carbon Monoxide detector is designed for indoor use only. Do not expose to rain or moisture. Do not knock or drop the alarm. Do not open or tamper with the alarm as this could cause malfunction. The detector will not protect against the risk of Carbon Monoxide poisoning when the batteries are dead or missing. The alarm will only indicate the presence of Carbon Monoxide gas at the sensor. Carbon Monoxide gas may be present in other areas.

Important Safety Precautions

- Ideally, it is recommended that a Carbon Monoxide detector should be installed in or near every room that has a fuel burning appliance such as any room heaters, water heaters, cookers, grills, etc.
- Ensure that the alarm horn can be heard by all those who are intended to hear it. Seek medical help if it is suspected that a user of the RV is suffering from Carbon Monoxide poisoning.
- If the alarm sounds, make sure to investigate the problem. Ignoring the alarm may result in sickness, injury or death. (CO may be present even if nothing is seen or smelled by the user.)
- Room spaces should be well ventilated when household cleaning supplies are used as these may cause a false alarm.
- Alarm should be tested once per week. If further details are required, which do not appear in this manual, contact BRK Brands Inc. First Alert.

What Is Carbon Monoxide

Carbon Monoxide (CO) is a highly poisonous gas that is released when fuels are burned. It is invisible, has no smell, and is therefore very difficult to detect with the human senses. Under normal conditions, in a room where fuel-burning appliances are well maintained and correctly ventilated, the amount of CO released into the room by appliances is not dangerous.

These fuels include wood, coal, charcoal, oil, natural gas, gasoline, diesel fuel, kerosene, and propane. Common appliances are often sources of CO. If they are not properly maintained, are improperly ventilated, or malfunction, CO levels can rise quickly. CO is a real danger in air-tight vehicles with added insulation, sealed windows, and other weatherproofing that can trap CO inside.

Conditions that can result in potentially dangerous CO situations

1. Excessive spillage or reverse-venting of fuel-burning appliances caused by outdoor conditions, such as:
   - Wind direction and/or velocity, including high gusts of wind.
   - Heavy air in the vent pipes (cold/humid air with extended periods between cycles).
   - Negative pressure differential resulting from use of exhaust fans.
   - Simultaneous operation of several fuel-burning appliances competing for limited internal air.
   - Vent-pipe connections vibrating loose from clothes dryers, furnaces, or water heaters.
   - Obstructions in or unconventional vent-pipe designs which can amplify the above situations.
2. Extended use of un-vented fuel burning devices.
3. Temperature increase that can trap exhaust gases near the ground.

Symptoms of Carbon Monoxide Poisoning

- Mild Exposure - Slight headache, nausea, vomiting, fatigue (flu-like symptoms).
- Medium Exposure - Throbbing headache, drowsiness, confusion, fast heart rate.
- Extreme Exposure - Convulsions, unconsciousness, heart and lung failure. Exposure to CO can cause brain damage and/or death.

WARNING

The Smoke/CO detector is shipped with batteries deactivated. Ask your dealer to activate batteries or activate batteries immediately upon delivery. Failure to follow this warning will remove your protection.

WARNING

Many causes of reported CARBON MONOXIDE POISONING indicate that while victims are aware that they are not well, they become so disoriented that they are unable to save themselves by either exiting the area or calling for assistance. Also young children and pets may be the first to be affected.

WARNING

Test Units in your touring coach after the vehicle has been in storage, before each trip, and at least once a week while in use. If the alarm ever fails to test correctly, have it replaced immediately. If the alarm is not working properly, it cannot alert you to a problem. Failure to test units used in RVs as described may remove your protection.

Regular Maintenance of Smoke/CO Detector

The Smoke/CO detector has been designed to be as maintenance-free as possible, but there are a few simple things you must do to keep it working properly. Use replacement batteries as indicated in the manual included with the device and provided to you in the Airstream owner's packet. The unit may not operate properly with other batteries. Never use rechargeable batteries since they may not provide a constant charge.

Testing the Smoke/CO Detector

PRESS and HOLD the TEST/SILENCE button 3-5 seconds until the unit starts to alarm. During testing, you will see and hear the following sequence:

- The Horn will sound 3 BEEPS, pause, 3 BEEPS. The Power/Smoke LED flashes Red and the CO LED will be Off.
- Next the Horn will sound 4 BEEPS, pause, 4 BEEPS. The Power/Smoke LED will be Off and the CO LED flashes Red.
- Test it at least once a week.
- Clean the Smoke/CO Alarm at least once a month: gently vacuum the outside of the alarm using your household vacuum's soft brush attachment. A can of clean, compressed air (sold at computer or office supply stores) may also be used. Follow manufacturer instructions for use. Never use water, cleaners, or solvents, since they may damage the unit.
- If the alarm becomes contaminated by excessive dirt, dust, and/or grime, and cannot be cleaned to avoid unwanted alarms, replace the unit immediately.

WARNING

The battery door will resist closing unless batteries are installed. This warns you that the unit will not operate without batteries.

WARNING

Carbon Monoxide is poisonous and can cause confusion, unconsciousness, and death. Follow all instructions, cautions, and warnings in this section.

WARNING

NEVER ignore any alarm. Failure to respond can result in injury or death. The Silence Features are for your convenience only and will not correct a problem. Always check your touring coach for a potential problem after any alarm. Failure to do so can result in injury or death.

Diesel Exhaust

Engine and Hydronic Heating and Hot Water System Safety

The touring coach engine and hydronic heating/hot water system run on diesel fuel and expel exhaust fumes externally. To avoid unsafe conditions or exposure to fumes and safely run the engine and hydronic system:

1. DO NOT run the engine or hydronic heating/hot water system in an enclosed building or a partly enclosed area such as a garage.
2. DO NOT operate the engine or hydronic heating/hot water system when parked close to objects that could block the exhaust and force fumes inside; examples include thick vegetation, snow, buildings, and other vehicles.
3. DO NOT operate the engine or hydronic heating/hot water system when parking the vehicle in high grass or brush. The heat from exhaust system components could cause a fire in dry conditions.
4. DO NOT touch any part of either exhaust system when the engine or hydronic heating/hot water system is running or immediately after shutting off. The heat coming off exhaust systems can cause burns. Allow the exhaust(s) to cool before attempting maintenance or service.

WARNING

Diesel engines produce carbon monoxide. Exposure to diesel exhaust fumes may cause headaches, nausea, chest tightness, wheezing, cough, and irritation of the eyes, nose, and throat, and in high concentrations can be fatal.

WARNING

Hot exhaust system components can cause burns if touched, even briefly.

Fire Extinguisher

The fire extinguisher should be checked for charge on a regular basis. Make sure your family knows how to release the extinguisher storage bracket and how to properly operate the extinguisher. Check with your local fire department for professional advice on its operation and use if you find the directions on the extinguisher unclear. They will be able and willing to assist you and your family.

WARNING

Read the directions carefully on the fire extinguisher. If there is any doubt on the operation you and your family should practice, then replace or recharge the extinguisher. You will find your local fire department will be happy to assist you and answer any questions.

WARNING

Do not smoke inside the touring coach. Keep matches out of reach of small children. Do not clean with flammable material. Keep flammable material away from open flame. We have all heard these warnings many times, but they are still among the leading causes of fires.

Emergency Exits

There are three avenues of escape from the touring coach in the event of an emergency, the driver's door, the passenger door, and the rear doors. As always, safety should be one of your top priorities. Make sure you and everyone traveling with you can operate these doors and exit rapidly without light. A little planning and a quick practice session at each camping site is well worth the time it may take.

WARNING

At each campsite, make sure you have not parked in such a manner as to block the operation of the doors or the escape avenues by being too close to trees, fences, or other impediments. Scenic views are one reason for traveling, but do not park so the beautiful lake or steep cliff is just outside your doors. Do not block access to the doors from the inside or outside of the vehicle.

Safety

As always, safety should be a top priority. Ensure that you, and everyone traveling with you, can quickly operate the main and rear doors in the dark. Plan for other means of escape in case these designated exits are blocked.

AIRSTREAM®

Section 3
GENERAL INFORMATION

LIMITED WARRANTY POLICY 3-2
This Limited Warranty Covers 3-2
Coverage Ends 3-2
Limitation Of Implied Warranties 3-2
Disclaimer Of Incidental And Consequential Damages 3-2
Repair Remedy 3-2
Back-Up Remedy 3-3
What Is Not Covered 3-3
Obtaining Warranty Service 3-4
Consumer Arbitration Program 3-5
Events That Discharge Airstream's Obligations Under This Limited Warranty . 3-5
Legal Remedies 3-5
Airstream Limited Warranty Excludes 3-5
Normal Wear 3-5
Accident 3-5
Abuse 3-5
Exposure 3-5
Overload 3-5
Chemical Gassing 3-5
Sprinter Van 3-6
SERVICE 3-6
Reporting Safety Defects 3-6
CAMPING 3-7
Suggested Pre-Travel Check List 3-7
Exterior 3-7
Interior 3-7
Touring Coach Equipment and Accessories 3-7
Motoring Essentials 3-7
Overnight Stop 3-7
Overnight or Weekend Trips 3-7
Longer Trips 3-8
Extended Stay 3-8
Leveling 3-8
Effects of Prolonged Occupancy 3-8
About Molds 3-9
What are molds 3-9
What factors contribute to mold growth . . 3-9
How can mold growth be inhibited 3-9
Waste Water System. 3-10
Things Not to Put into Toilet or Drains . .3-10
Drain System (GL) 3-10
Drain System (GT) 3-10
Winter Traveling 3-11
Heated Tanks 3-11

Limited Warranty Policy

This Limited Warranty Covers

(i) The first retail owner and any subsequent owners (ii) ONLY those portions of a NEW motorhome not excluded under the section “What is Not Covered”, when sold by an authorized dealership and used for its intended purpose of recreational travel and camping; and, (iii) ONLY defects in workmanship performed and/or materials used to assemble those portions of your motorhome not excluded under the section “What is Not Covered”. “Defect” means the failure of the workmanship performed and/or materials used to conform with the design and manufacturing specification and tolerances of Airstream. The Limited Warranty is transferable and the subsequent owner’s warranty coverage period shall be the unexpired balance of the original warranty coverage period. A completed copy of the Warranty Transfer Form must be submitted to Airstream at the time of resale.

When you request and accept the performance of warranty repairs under the terms of this Limited Warranty, you are accepting all terms of this Limited Warranty, including by way of example, warranty limitations and disclaimers, the forum selection clause and the clause reducing the time period when suit must be filed for breach.

If any term of condition in this limited warranty conflicts with your state’s Uniform Commercial Code (“UCC”) as interpreted by courts within your state, the provisions of your state’s UCC are varied as allowed for by USS 1-302.

Coverage Ends

36 months after the first retail owner first takes delivery of the motorhome from an authorized dealership or after the odometer reaches 36,000 miles, whichever occurs first. Any action for breach of this warranty or any implied warranties must be commenced not more than 37 months after breach. Some states do not allow the reduction of the time when a breach of warranty claim must be commenced, so the reduction in time when a breach of warranty claim must be commenced may not apply to you.

Limitation Of Implied Warranties

Implied warranties arising under applicable law, if any, including but not limited to implied warranties of merchantability or fitness for a particular purpose, are hereby limited in duration to the term of this limited warranty and are limited in scope of coverage to those portions of the motorhome covered by this limited warranty. There are no express warranties or any implied warranties of merchantability on those portions of the motorhome excluded from coverage. There is no warranty of any nature made by airstream beyond that contained in this limited warranty. No person has authority to enlarge, amend or modify this limited warranty. The dealer is not Airstream’s agent. Airstream is not responsible for any undertaking, representation or warranty made by any dealer or others beyond those expressly set forth within this limited warranty. Some states do not allow limitations on how long an implied warranty lasts, so the above limitations may not apply to you.

Disclaimer Of Incidental And Consequential Damages

Airstream disclaims any and all incidental and consequential damages, including but not limited to expenses such as transportation to and from dealerships and Airstream repair facilities, loss of time, loss of pay, loss of use, inconvenience, commercial loss (including but not limited to lost profits), towing charges, bus fares, vehicle rental, service call charges, gasoline expenses, incidental charges such as telephone calls and facsimile transmissions, and expenses for lodging and moisture damage such as mold and mildew as well as rust and corrosion. This disclaimer is independent of any failure of the essential purpose of any warranties provided with the motorhome, and shall survive any determination that a warranty failed of its essential purpose. Some states do not allow the exclusion or limitation of incidental or consequential damages, so the above limitation or exclusion may not apply to you.

Repair Remedy

Airstream’s sole and exclusive obligation is to repair any covered defects discovered within the warranty coverage period if: (1) within 10 days of your discovery of a defect you notify Airstream OR an authorized dealership of the defect; AND (2) you deliver your Motorhome to Airstream OR an authorized dealership at your cost and expense.

Back-Up Remedy

If the primary repair remedy fails to successfully cure any defect after a reasonable number of repair attempts, your sole and exclusive remedy shall be to have Airstream pay an independent service shop of your choice to perform repairs to the defect OR if the defect is incurable, have Airstream pay diminution in value damages. The repair remedy and the back-up remedy must both be exhausted and these remedies must fail to fulfill their essential purpose before you can seek other legal or equitable remedies for breach of this express warranty or for breach of any implied warranty. This limited warranty is not a warranty that promises or extends to future performance because the warranty does not make a representation on how your motorhome will perform in the future but instead represents only what the remedy will be if a defect exists.

Unless prohibited by state law, repairs will not extend the time when you must commence a breach of warranty claim and shall not extend the warranty coverage period. Any performance of repairs after the warranty coverage ends OR any performance of repairs to those portions of your motorhome excluded from coverage shall be considered “good will” repairs. Warranty repairs should be expected. Airstream may use new and/or remanufactured parts and/or components of substantially equal quality to complete a repair. Damage to interior or exterior surfaces, trim, upholstery and other appearance items may occur at the factory during assembly, during delivery of the motorhome to your selling dealer or on the selling dealer’s lot. Normally, any damage is detected and corrected at the factory or by the selling dealer during the inspection process. If you discover any damage when you take delivery of your motorhome, you MUST notify your dealer OR Airstream within 10 days of the date of purchase to have damage repaired at no cost to you. Minor adjustments, such as adjustments to the interior or exterior doors, drawers, latches will be performed at no cost to you by your selling dealer during the first 90 days of warranty coverage; thereafter, such adjustments are your exclusive responsibility as normal maintenance.

What Is Not Covered

1. Tires, batteries, lithium power system, stereo, television, range/stove, furnace, refrigerator, air conditioner, toilet, water heater, microwave, generator, glass breakage, and other materials, parts and components warranted by persons or entities other than Airstream. Please refer to the warranties of component manufacturers for terms and conditions of coverage;
2. Accessories and equipment that are working as designed, but which you are unhappy because of the design;
3. Any part or component of the vehicle that was not manufactured or installed by Airstream;
4. Normal deterioration due to wear or exposure, including but not limited to upholstery, flooring rust, corrosion, oxidation, and cosmetic blemishes;
5. Normal maintenance and service items, including but not limited to light bulbs, fuses, lubricants, sealants and seals, door adjustments, and awning tension;
6. After-market equipment or accessories installed on the vehicle after completion of manufacture by Airstream, or any defects or damage caused by such items;
7. Vehicles not purchased through an authorized dealer of Airstream and vehicles purchased directly or indirectly through auction, salvage, repossession, or other non-customary sale means;
8. Any motorhome used other than for temporary recreation purposes, including, but not limited to, use of the motorhome for residential, rental, business and commercial purpose or any motorhome purchased by, registered by, or titled in the name of a business association (such as any LLC, corporation, or partnership). If the motorhome owner or user files a tax form claiming a business or commercial tax benefit or income related to the motorhome, it shall be irrefutable that the motorhome has been used for rental, commercial or business purposes.

9. Defects or damage caused by, in whole or in part, or in any way related to: Accidents, misuse (including off-road use), or negligence; Failure to comply with the instructions set forth in any owner's manual provided with the vehicle; Alteration or modification of the vehicle except such alterations or modifications approved in writing by Airstream; Acts of God or other environmental conditions, such as lightning, hail, salt causing rust, or other chemicals in the atmosphere; De-icing agents or other chemicals applied to the vehicle; Failure to properly maintain or service the vehicle, including but not limited to the maintenance of lubricants, sealants, and seals; Condensation and the results of condensation including water damage and the growth of mold or mildew. Mold and mildew are natural growths given certain environmental conditions and are not covered by the terms of this Limited Warranty; The addition of weight to the vehicle that causes the total weight to exceed applicable vehicle weight ratings, or addition of weight causing improper distribution of the weight of the vehicle; Failure to seek and obtain repairs in a timely manner; Failure to use reasonable efforts to mitigate damage caused by defects' Failure to properly ventilate the vehicle; Improper electric power supply or improper vehicle hookup to other facilities; and, Acts or omissions of any person or entity other than Airstream. (Note: An irrefutable presumption arises that the motorhome has been used for commercial and/or business purposes if the motorhome owner or user files a tax form claiming any business or commercial tax benefit related to the motorhome, or if the motorhome is purchased, registered or titled in a business name.)

Obtaining Warranty Service

In order to obtain warranty service under this Limited Warranty, the owner must do all of the following:

1. Owner and dealer representative must complete and return the Customer Performance Checkout within 10 days from delivery of the vehicle,
2. Notify Airstream or one of its authorized, independent dealers of any claimed defect within the warranty period or 10 days thereafter,
3. Provide notification of a defect within 10 days of discovery of that defect, and
4. Promptly return the motorhome to an authorized Airstream dealer or Airstream for repairs.

If you believe a defect covered by this Limited Warranty still exists after an attempted repair by an authorized Airstream dealer, you must contact Airstream in one of the following manners, and specify:

1. The complete serial number of the motorhome,
2. The date of original purchase and the date of original delivery,
3. The name of the selling dealer, and
4. The nature of the problem and the steps or service which have been performed.

Email: support@airstream.com

Phone: (937) 596-6111

Mail: AIRSTREAM, INC., 428 West Pike Street, P.O. Box 629, Jackson Center, Ohio 45334-0629, Attention: Owner Relations Department

Airstream may direct you to an authorized Airstream dealer, or may request that you bring your motorhome to the Airstream factory in Jackson Center, Ohio for repairs.

Airstream does not control the scheduling of repairs at its authorized Airstream dealers, and repairs at the Airstream factory may not be immediately available. Therefore, you may encounter delays in scheduling repairs and/or completion of repairs. All costs associated with transporting the motorhome for any warranty service shall be the sole responsibility of the owner.

Consumer Arbitration Program

For recreation vehicles purchased in the State of California, Airstream, Inc. participates in the Consumer Arbitration Program for Recreation Vehicles (CAP-RV). This third-party dispute resolution program is available, at no charge to you, to settle unresolved warranty disputes for recreation vehicles. This dispute resolution program reviews eligible product and service related complaints involving warranty covered components. To find out more about this program, or to request an application/brochure, please call the Arbitration Administration office toll-free 800.279.5343. The CAP-RV program operates as a certified mechanism under the review of the California Arbitration Certification Program. Members of the armed forces who purchased the vehicle in California, or who were stationed in or a resident of California at the time of purchase (regardless of state of purchase) or who are stationed in California at the time of application to this program may utilize the CAP-RV program.

Events That Discharge Airstream's Obligations Under This Limited Warranty

Misuse or neglect, accidents, unauthorized alteration, failure to provide reasonable and necessary maintenance (see Owner's Manual), damage caused by off road use, collision, fire, theft, vandalism, explosions, overloading in excess of rated capacities, odometer tampering, and use of the motorhome for commercial, business, or rental purposes shall discharge Airstream from any express or implied warranty obligation to repair any resulting defect.

Legal Remedies

Exclusive jurisdiction for deciding legal disputes relating to alleged breach of express warranty and breach of implied warranties arising by operation of law as well as those relating to representations of any nature rests in the courts within the state of manufacture, which is Ohio. Also, this limited warranty shall be interpreted and construed in accordance with the laws of the state of Ohio. Any and all claims, controversies, and causes of action arising out of or relating to this limited warranty, whether sounding contract, tort or statute, shall be governed by the laws of the state of Ohio, including its statute of limitations, without giving effect to any conflict of law rule that would result in the application of the laws of a different jurisdiction.

Airstream Limited Warranty Excludes

Normal Wear

Items such as curtains, upholstery, floor coverings, and window, door, and vent seals will show wear or may even wear out within the 3-year warranty period, depending upon the amount of usage, weather, and atmospheric conditions.

Accident

We strongly urge our dealers and customers to inspect the touring coach upon receipt of delivery for any damage caused by accident while being delivered to the dealer, or while it is on the dealer's lot. Damage of this nature becomes the dealer or customer's responsibility upon acceptance of delivery, unless Airstream is notified and the person making the delivery verifies the damage. Glass breakage, whether obviously struck or mysterious, is always accidental and covered by most insurance policies.

Abuse

Lack of customer care and/or improper maintenance will result in early failure for which Airstream cannot be held responsible.

Exposure

Deterioration by sunlight is possible to such items as tires, curtains or upholstery. Steel or metal surfaces are subject to the elements, causing rust and corrosion that is normal and beyond the control and responsibility of Airstream.

Overload

Overload Damage due to loading beyond capacity or to cause improper balance is not covered by the Airstream Limited Warranty. The Airstream Touring Coach is engineered to properly handle any normal load. There are limits to the amount of load that can be safely transported depending upon speed and road conditions. If these limits have been exceeded, the Airstream Limited Warranty will not cover resulting damage. For additional information on the load capacity of your touring coach, consult your Sprinter and Airstream Owner's Manuals or gross vehicle weight rating plate.

Chemical Gassing

Chemical gassing is not a "Defect" in your recreational vehicle and is not covered by the Limited Warranty. Please follow the recommendations in this manual to address this concern.

Sprinter Van

Airstream, Inc., does not accept any responsibility in connection with any of its touring coach's for the Sprinter Van or its components. The Sprinter Van and its components are covered by Mercedes-Benz Warranties as explained by Sprinter literature provided. Your Sprinter Van and its components are pre-checked by its manufacturer before delivery to Airstream. All service to the Sprinter Van and its components must be performed by Mercedes-Benz Sprinter designated service points according to the manufacturer's warranty and service policies. The literature provided with each touring coach gives important information concerning its warranty coverage, maintenance, and operation.

The Airstream Interstate Owner's Manual may provide additional information and tips on the use of the van as a touring coach, however, no information, in whole or in part, in any Airstream manual should be interpreted as advice or directions to disregard or void the Warnings, Cautions, Notices, or other information contained in the Sprinter's manuals.

WARNING

Your Mercedes-Benz Sprinter Van Operator's and Warranty Manuals contain important cautions, warnings, operational, and warranty information on the Sprinter and its components. All information in the Sprinter manual should be reviewed and followed for your safety.

Service

Before leaving the factory, every vital part of the touring coach is tested for performance. Each test is signed and certified by an inspector. After the touring coach arrives on your dealer's lot, all vital parts and systems are again tested. When you take delivery of your new touring coach, you will receive a complete check out.

At that time, a specified list of performance checks on your touring coach equipment will be conducted, and any deficiencies you have experienced since taking delivery will be corrected.

Please contact your dealer if your touring coach needs service. Major service under your Airstream Limited Warranty is available through our nationwide network of Airstream Dealer Service Centers. To find a dealer, please visit, https://www.airstream.com to use our dealer locator.

Occasionally, dealerships change, or new dealers are added that may not appear on the website immediately. Please note that all centers operate on an appointment basis for the utmost efficiency.

When you require service for your touring coach from the Airstream Factory Service Center or a Certified Dealer Service Center, please contact the service manager for an appointment, and inform them if you are unable to keep the appointment date or wish to change it. Service may be arranged at the Factory Service Center by contacting the Service Coordinator at:

Airstream Factory Service Center

428 West Pike Street

P.O. Box 629

Jackson Center, Ohio 45334-0629

Phone: (937) 596-6111 or (877) 596-6111

NOTE

Connected RV features and systems may be turned off while in a service facility for the safety of our technicians. You might have to re-pair your personal device after service appointment.

Reporting Safety Defects

If you believe your vehicle has a defect which could cause a crash or could cause injury or death, you should immediately inform the National Highway Traffic Safety Administration (NHTSA), in addition to notifying Airstream, Inc.

If NHTSA receives similar complaints, it may open an investigation, and if it finds that a safety defect exists in a group of vehicles, it may order a recall and remedy campaign. However, NHTSA cannot become involved in individual problems between you, your dealer, or Airstream Inc.

To contact NHTSA, you may either call the Vehicle Safety Hotline toll-free at 1-888-327-4236 (TTY: 1-800-424-9153), go to https://www.nhtsa.gov, or write to:

Administrator

NHTSA

1200 New Jersey Avenue, S.E.

Washington, DC 20590

For additional information about motor vehicle safety visit https://www.nhtsa.gov.

Camping

Suggested Pre-Travel Check List

Exterior

1. Verify power cord is stored
2. Verify leveling jacks are up (if equipped).
3. Verify water and sewer hoses are stored.
4. Double check all hitch connections (if towing).
5. Look under, over, and around the vehicle for any overlooked items.
6. Check exterior lighting.
7. Check torque of lug nuts.
8. Check tires for correct pressure.

Interior

1. Turn off water pump and heater/hot water system.
2. Close windows and vents.
3. Close all interior cabinet doors.
4. Latch refrigerator door. (Seal containers first.)
5. Latch microwave.
6. Secure, stow, and latch for travel anything that will move, fall, fly, or open.
7. Drain toilet bowl.
8. Turn off 12-volt lights.

Touring Coach Equipment and Accessories

1. Water hose, 5/8-in. high-pressure, tasteless, odorless, non-toxic (two 25-ft. sections).
2. Y connection - water hose.
3. Holding tank cleaner and deodorizer.
4. Power cord adapter, 15 amp - 30-amp.
5. 30-ft. electric cord, 30-amp capacity.
6. Wheel chocks.
7. Torque wrench.
8. Quality tire gauge.
9. Emergency light and first aid kits.

Motoring Essentials

1. Touring coach registration.
2. Carry driver's license.
3. In Canada, bring along a non-residence liability insurance card and your passport.
4. In Mexico, you must have special auto insurance.
5. Carry an extra set of the ignition keys in a separate pocket or in your wallet.
6. Keep an operating flashlight with fresh batteries in the glove compartment.
7. Carry your pet's dish, food, leash, and health and registration papers.

Overnight Stop

In time you will develop a knack for spotting wonderful little roadside locations by turning off the main highway and exploring. There are many modern recreational vehicle parks, including State, County, and Federal parks with good facilities, where you may obtain electrical, water, and sewer hookups and connections. Directories are published which describe in detail these parks and tell what is available in the way of services and hookups.

All you need to do to enjoy the self-contained luxury while boondocking is to:

1. Turn on the Battery Power pushbutton (battery disconnect switch) to provide power to your components.
2. Inverter will need to be turned on to power the entertainment devices. To conserve battery power, turn off the inverter when not in use.
3. Turn on the water pump and open faucets until air is expelled from the system.

Before moving on, turn off the water pump and the heating/hot water system. Check your campsite, both for cleanliness and to be sure you have not left anything behind. Make sure everything is properly stowed.

Overnight or Weekend Trips

On overnight or weekend trips, chances are you will not use up the capacity of the holding tanks. Deplete the water supply, if using the system moderately or conservatively. You will need to maintain the level of your battery during longer periods of battery use, and when the State-of-Charge (SOC) is low. The battery management shuts down the Volta System if the Flex Pack reaches a very low voltage limit of 0% SOC.

Longer Trips

On a longer trip, when you have stayed where sewer connections and utility hookups were not available, it will be necessary for you to stop from time to time to dispose of the waste in the holding tank and replenish the water supply. Many truck stops and gas stations, chain and individually owned, have installed sanitary dumping stations for just this purpose. Booklets are available that list these facilities.

When you stop for the night, your Airstream Touring Coach is built to be safely parked in any spot that is relatively level and where the ground is firm. Your facilities are with you. You are self-contained. Try to pick as level a parking spot as possible.

Extended Stay

Making a long trip is not very different from making a weekend excursion. Since everything you need is right at hand, you are at home wherever you go. When packing for an extended trip, take everything you need, but only what you need.

Hook up to water by attaching a ½ -inch minimum high-pressure water hose to the city water service.

Plug the 120-volt, 30-amp electrical cable into the city power service. The SmartPlug incorporates a reverse polarity feature which will include a series of light codes to let you know the condition of the power coming from the campsite power pedestal. Please refer to the provided SmartPlug owner's manual for more information on reverse polarity and the light codes; also see Shoreline Power Inlet and Cordset on page 6-9

A Cable/Satellite TV connection is located in the exterior compartment along with the switches for the dump valves, macerator pump, and macerator pump high-pressure hose reel.

When you stay for extended periods where electric or water hookups are not available, you must make regular checks on State-of-Charge of your battery and the contents of your water tank (Multiplex control panel). Carry drinking water in a clean bucket to refill your tank. When your waste tank nears capacity, move your touring coach to a dumping location.

Leveling

When you plan to stay in the same place for several days, weeks, or months, you will want your touring coach to be as level as possible. Check the attitude with a small spirit level set on the inside work counter. If a correction is necessary, then you must first level from side to side. This can be done most easily by driving up a small ramp consisting of 2 in. x 6 in. boards tapered at both ends. Airstream does not recommend placing tires in a hole for leveling. For more information on tires, see Tires on page 7-3.

For units equipped with the optional hydraulic leveling system, see Hydraulic Leveling System on page 6-10.

Effects of Prolonged Occupancy

Your touring coach was designed primarily for recreational use and short-term occupancy. If you expect to occupy the touring coach for an extended period, be prepared to deal with condensation and the humid conditions that may be encountered. The relatively small volume and tight compact construction of modern recreation vehicles mean that the normal living activities of even a few occupants will lead to rapid moisture saturation of the air contained in the touring coach and the appearance of visible moisture, especially in cold weather.

Just as moisture collects on the outside of a glass of cold water during humid weather, moisture can condense on the inside surfaces of the touring coach during cold weather when relative humidity of the interior air is high. This condition is increased because the insulated walls of a recreation vehicle are much thinner than house walls. Estimates indicate that two adults can vaporize up to one-and-a-half gallons of water daily through breathing, cooking, bathing, and washing. Unless the water vapor is carried outside by ventilation or condensed by a dehumidifier, it will condense on the inside of the windows and walls as moisture, or in cold weather as frost or ice. It may also condense out of sight within the walls or the ceiling where it will manifest itself as warped or stained panels. Appearance of these conditions may indicate a serious condensation problem. When you recognize the signs of excessive moisture and condensation in the touring coach, action should be taken to minimize their effects.

NOTE

Your touring coach is not designed, nor intended, for permanent housing. Use of this product for long term or permanent occupancy may lead to premature deterioration of structure, interior finishes, fabrics, carpeting, and drapes. Damage or deterioration due to long-term occupancy may not be considered normal, and may under the terms of the warranty constitute misuse, abuse, or neglect, and may therefore reduce the warranty protection.

To avoid condensation problems, try to follow these tips to help alleviate excess moisture:

- Allow excess moisture to escape to the outside when bathing, washing dishes, hair drying, laundering, and using appliances. Always use an exhaust fan when cooking.
- Keep the bathroom door closed and the vent or window open when bathing and for a period of time after you have finished.
- If you are experiencing condensation, you may want to reconsider hanging wet clothes in the touring coach to dry.
- In hot weather, start the AC early as it removes excess humidity from the air while lowering the temperature.
- Keep the temperature as reasonably cool during cold weather as possible. The warmer the vehicle, the more cold exterior temperatures and warm interior temperatures will collide on wall surfaces, thus creating condensation.
- Use the ceiling vent to keep air circulating inside the vehicle so condensation and mildew cannot form in dead air spaces. Allow air to circulate inside closets and cabinets (leave doors partially open). Please keep in mind that a closed cabinet full of stored goods prevents circulation and allows the exterior temperature to cause condensation.
- The natural tendency would be to close the vehicle tightly during cold weather. This will actually compound the problem. Simply put, you need to remove some of the warm air and allow some cool outside air to get inside the vehicle so the furnace will not recycle the humid interior air.
- Minimize the use of incandescent lights, which produce heat and contribute to condensation.

About Molds

What are molds

Molds are microscopic organisms that naturally occur in virtually every environment, indoors and out. Outdoors, mold growth is important in the decomposition of plants. Indoors, mold growth is unfavorable. Left unchecked, molds break down natural materials, such as wood products and fabrics. Knowing the potential risks is important for any type of homeowner to protect their investment.

What factors contribute to mold growth

For mold growth to occur, temperatures, indoor or outdoors, must be between 40°F and 100°F and also, there must be a source of moisture, such as humidity, standing water, damp materials, etc. Indoors, the most rapid growth occurs with warm and humid conditions.

How can mold growth be inhibited

By controlling relative humidity, the growth of mold and mildew can be inhibited. In warm climates, use of the air conditioner will reduce the relative humidity. Vents are located in the bathing and cooking areas and constant use is advised during food preparation and bathing, even during colder weather. Additionally, opening a window during these activities will assist in ventilation. In extremely humid conditions, the use of a dehumidifier can be helpful. If using a dehumidifier, please read and follow all manufacturer instructions and recommendations to the use and cleaning of the dehumidifier.

Frequent use of your touring coach or cleaning regularly is an important preventive measure. Further, any spills should be wiped up quickly and dried as soon as possible. Avoid leaving damp items lying about. On safe surfaces, use mold or mildew killing cleaning products. Check sealants regularly, and reseal when necessary to avoid water leaks. Proper preventive maintenance to the touring coach and its accessories, as described both in this manual and in accompanying literature, will provide the best protection to the touring coach.

Waste Water System

The main parts of the waste water system are the toilet, holding tanks, and tank dump valves; see Drain and Waste System on page 9-8. The system is designed to provide complete self-contained toilet facilities, while on the road or parked, without being connected to a sewage line. It may also be used when parked while connected to a sewage hose.

Keep the dump valves closed with either method and empty the tanks when they are nearly full. The idea is to send a large volume of water through the tanks and hose at the same time to float solids away.

After the sewage tank has been emptied, close the dump valves and charge the tank by putting a few gallons of water in the sewage holding tank using the black tank flush inlet. This will spray the interior of the tank with water and help prevent solids from building up in the sewage holding tank. The addition of a deodorizing agent like Aqua-Kem will help prevent odors.

Should you ever have a buildup of solids, close the valves, fill the tanks about 3/4 full with fresh water, drive a distance to agitate the solids, and drain the tanks.

Things Not to Put into Toilet or Drains

- Facial tissues and feminine hygiene products(they do not dissolve like toilet paper).
- Automotive antifreeze, ammonia, alcohols, or acetone.
- Table scraps or other solids that may clog the drains.

Drain System (GL)

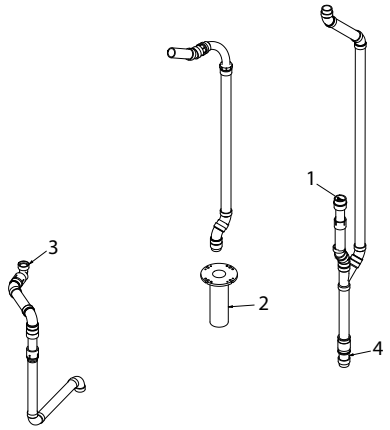

1. Lavatory Drain
2. Black Water Tank (Toilet)
3. Galley Drain
4. Gray Water Tank

Drain System (GT)

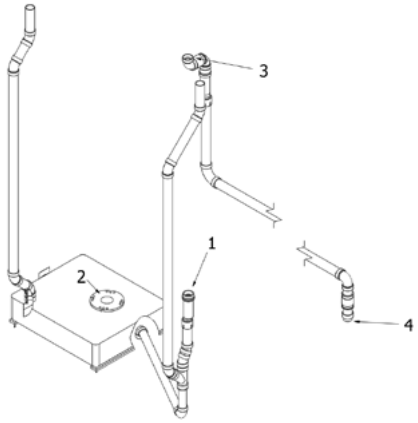

1. Lavatory Drain
2. Black Water Tank (Toilet)
3. Galley Drain
4. Gray Water Tank

Winter Traveling

Traveling in sub-freezing temperatures will require certain precautions to protect the plumbing system and your personal belongings from being damaged by freezing.

While traveling, simply use your common sense. How cold is it? How long will it be before you can turn the heat back on? Is the temperature dropping or rising? Remember, when driving at 50 MPH, the wind chill factor will cause the interior of the touring coach to cool much faster than a touring coach that is parked.

1. You must have at least 1/4 tank of fuel to run the hydronic heating/hot water system as the heat from the furnace warms the touring coach and keeps the fresh water lines and black water holding tank from freezing. If your fuel tank drops below 1/4 tank, the hydronic system will automatically shut off. This 1/4 tank reserve is so you can travel to refuel.
2. If your stay is longer than overnight, you should endeavor to have a shoreline hookup.
3. Minimize use of electricity if 120-volt power source is not available.
4. Leave cabinet doors, wet bath doors, and wardrobe doors slightly open at night to allow circulation of air in and around all components.
5. Save power by using non-toxic RV- approved antifreeze in the gray water holding tank instead of the heating pad to prevent freezing. Quantity of antifreeze needed will vary with ambient temperature and the amount of liquids in tank.
6. For extended stays in cold weather, insulate all water lines outside the touring coach. You should remember that low temperatures in combination with high winds cause an equivalent chill temperature much below what your thermometer is reading. For instance, with an outside temperature of zero degrees, and the wind velocity of 10 miles per hour, the equivalent chill temperature is -20°F.
7. Remember to remove and drain the exterior shower faucet to prevent freeze damage.

Heated Tanks

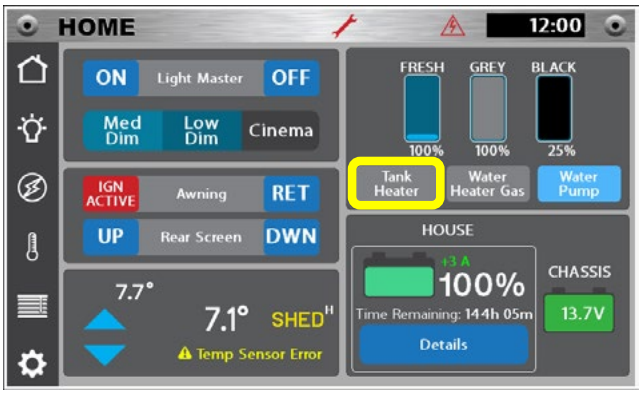

Screen images may vary slightly with continuous improvements/firmware updates

The touring coach has 12-volt heat pads installed with the fresh and gray water tanks to help prevent freezing. The tank pads are controlled by the Multiplex control panels. When the outside temperature is near freezing, simply switch “ON” the tank heaters. Built-in sensors will activate the heat pads when the contents of the tanks drop to 44°F. Once the liquid is heated and rises to 64°F the heat pads will automatically deactivate. Switch the power “OFF” when the ambient outside temperature remains above freezing or if the tanks are empty. The tank heaters will eventually deplete the house battery unless the unit is plugged into an external power source. To conserve battery power, RV antifreeze may be used to protect the gray and black tanks.

NOTE

The black tank is installed above the floor where heat from the furnace will keep it from freezing.

NOTE

Drain and winterize all models if the water systems are not being used during winter traveling; see Winterizing and Storage on page 9-10

NOTES

AIRSTREAM®

Section 4
FLOOR PLANS AND SPECIFICATIONS

FLOOR PLANS 4-2
Interstate GL 4-2
Interstate GT 4-2
SPECIFICATIONS 4-3
Specification Tags 4-4

Floor Plans

Interstate GL

Interstate GT

Specifications

NOTE

The following specifications are as accurate as possible at the time of publication. Since we continually strive to improve our products, this information may change without notice. All capacities are approximate, and dimensions are nominal.

Item	Interstate 24	
	All Models	**4 x 4 Option**
Chassis	Mercedes-Benz® Sprinter 3500 Extended	Mercedes-Benz® Sprinter 3500 Extended
Engine	Mercedes-Benz® 3.0L V6 Turbo Diesel	Mercedes-Benz® 3.0L V6 Turbo Diesel
Emissions	BlueTEC SCR Technology, 50 States - EPA/ CARB Standards	BlueTEC SCR Technology, 50 States - EPA/ CARB Standards
Horsepower/Torque	188 HP/325 lbs Torque	188 HP/325 lbs Torque
Transmission	7 Speed Automatic	7 Speed Automatic
Axle Ratio	3.92	3.92
Wheelbase	170”	170”
MPG*	18+ Estimated Highway	18+ Estimated Highway
Exterior Overall Length	24’ 6”	24’ 6”
Exterior Overall Height	9’ 7” (with A/C & Antenna)	9’ 9” (with A/C & antenna)
Exterior Overall Width	7’ 11.5”	7’ 11.5”
Interior Height	6’ 2.25”	6’ 2.25”
Interior Width	5’ 10”	5’ 10”
GVWR	11,030 lbs	11,030 lbs
GCWR	15,250 lbs	15,250 lbs
UBW (GL)	9,545 lbs	9,945 lbs
UBW (GT)	9,323 lbs	9,723 lbs
NCC (GL)	1,485 lbs	1,085 lbs
NCC (GT)	1,707 lbs	1,307 lbs
Tow Capacity	Up To 5,000 lbs	Up To 5,000 lbs
Fuel Tank	24.5 gallon	24.5 gallon
Fresh Water Capacity	23 gallon	23 gallon
Gray Water Tank	24 gallon	24 gallon
Black Water Tank	11 gallon	11 gallon
Hydronic Heating/Hot Water System	Diesel Fired/120V Element Support	Diesel Fired/120V Element Support
Air conditioner	13,500 BTU	13,500 BTU
Refrigerator w/Freezer Box (GL) (12 Volt)	3.1 cubic feet (Fridge) .33 cubic feet (Freezer)	3.1 cubic feet (Fridge) .33 cubic feet (Freezer)
Refrigerator & Freezer (GT) (12 Volt)	5.0 cubic feet (Fridge) 1.6 cubic feet (Freezer)	5.0 cubic feet (Fridge) 1.6 cubic feet (Freezer)
Microwave	1.2 cubic feet	1.2 cubic feet
Cooktop	1,000 Watt, Single burner, Induction	1,000 Watt, Single burner, Induction
Battery (House)	12.1 Kilowatt-hour lithium battery pack	12.1 Kilowatt-hour lithium battery pack
Converter	(2) 30 Amp DC-DC Converters	(2) 30 Amp DC-DC Converters
Inverter	3,200 Watt Pure Sine Inverter	3,200 Watt Pure Sine Inverter
Shore Power	30-Amp/120-Volt Service	30-Amp/120-Volt Service
Solar Power	400 Watt Solar System (300 Total Watts - House) (100 Total Watts - Chassis)	400 Watt Solar System (300 Total Watts - House) (100 Total Watts - Chassis)
Front and Rear Parking Sensors	Standard	Standard
Bed Size (Rear Lounge)	70” X 82”	70” X 82”
Lug nut torque Max (ft lbs.)	140	140
Tire Size and Max Cold Inflation Pressure*	Front - LT215/85R16 - 61PSI Rear - LT215/85R16 - 58PSI	
Airstream Warranty	3 Years/36,000 Miles	
Mercedes-Benz® Warranty	3 Years/36,000 Miles	
Mercedes-Benz® Engine Warranty	5 Years/100,000 Miles	

*The term *cold* refers to how long a tire has sat idle. *Max cold inflation pressure* should be checked in the morning (after sitting idle for at least three hours) before driving more than a few miles, or before rising ambient temperatures and the sun’s radiant heat can affect tire pressure.

The Unloaded Vehicle Weight (UBW) and Occupant Cargo Carrying Capacity (NCC) weights listed in the Specification Chart are for the base unit with battery included.

Gross Vehicular Weight Rating (GVWR) is the maximum permissible weight of this touring coach when fully loaded. It includes all weight at the touring coach axle(s).

UBW is the dry weight of the base unit without options.

NCC is equal to GVWR minus UBW. Gross Axle Weight Rating (GAWR) is the value specified as the load carrying capacity of a single axle system, as measured at the tire-ground interfaces.

Specification Tags

For precise cargo capacity, refer to the Cargo-Carrying Capacity tag on the inside of the door. The **WEIGHT OF CARGO SHOULD NEVER EXCEED** numbers shown on the tag, which is the maximum weight of cargo you can load and carry in your specific touring coach as built with its options.

Located on the driver's door jam of your touring coach are the Tire and Loading, and Vehicle Manufacturing tags.

The Tire and Loading information tag lists the Size and Cold Inflation Pressure of the tires on your vehicle, the weight of your touring coach as manufactured, and the GVWR.

The Vehicle Manufacturing tag lists the size of tires and wheel rims, maximum cold inflation pressures, the Vehicle Identification Number (VIN), and GAWR.

For a complete list of capacities, see Specifications on page 4-3.

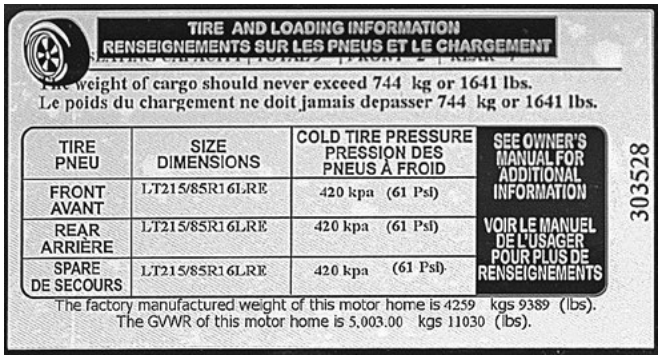

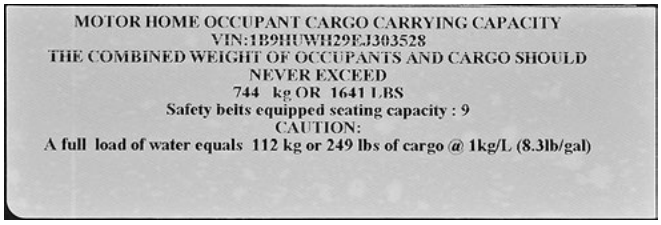

NOTE

Specification tags shown above are examples only.

WARNING

For safety reasons, the wheel tightening torque must be checked immediately after changing a tire and again after 30 miles to 140 ft-lbs. The wheels could otherwise come loose.

AIRSTREAM®

Section 5
INTERIOR

GENERAL INFORMATION AND CLEANING . . . 5-3
Upholstery . . . 5-3
Cabinets and Overhead Lockers . . . 5-3
Aluminum Interior Skin . . . 5-3
Counter Area . . . 5-3
Sinks . . . 5-3
Luxury Woven Vinyl Floor . . . 5-3
Privacy Sun Shades . . . 5-4
Wet Bath . . . 5-4
Shower Head . . . 5-4
Retractable Clothesline . . . 5-4
Toilet . . . 5-4
Deodorizers and Biological Chemicals . . . 5-4
Faucets . . . 5-5
Lavatory Faucet . . . 5-5
Galley Faucets . . . 5-5
Faucet Cleaning and Care . . . 5-5
Storage . . . 5-5
Driver and Passenger Seats . . . 5-5
Captain's Chairs, Second Row . . . 5-5
Rear Lounge/Bed . . . 5-6
Pedestal Table . . . 5-6
Collapsing Clothes Rod . . . 5-6
Power Shades . . . 5-6
ELECTRICAL SYSTEM OVERVIEW . . . 5-7
Power Center . . . 5-7
Circuit Breaker Protection . . . 5-7
Ground Fault Circuit Interrupter (GFCI) . . . 5-8
GFCI Breaker Test . . . 5-8
120 volt System . . . 5-9
City Power Overview . . . 5-9
Energy Management System (EMS) . . . 5-9
Overview . . . 5-9
12 volt System . . . 5-10
Solar System . . . 5-10
ELECTRICAL SYSTEM OPERATION . . . 5-11
Power System Overview . . . 5-11
Volta Flex System Components . . . 5-11
Flex Pack . . . 5-11
Battery Management System (BMS) . . . 5-11
Inverter/Charger . . . 5-11
DC-DC Converter . . . 5-11
Secondary Alternator . . . 5-11
Battery Power On/Off Pushbutton . . . 5-11
Volta Flex System Component Functions . . . 5-12
Battery Power On/Off Pushbutton . . . 5-12
Turning ON the Volta Power System . . . 5-12
Turning OFF the Volta Power System . . . 5-12
Charge Only Mode . . . 5-12
Pushbutton LED Flash Codes . . . 5-12
Volta Touchscreen Display . . . 5-12
Home Screen . . . 5-13
Alerts Screen . . . 5-14
Settings Screen . . . 5-14
Inverter/Charger Screen . . . 5-14
MyVolta App . . . 5-14
MyVolta Cloud . . . 5-15

Section 5
Interior

Battery Charge 5-15
System Runtime 5-15
Charging via Shoreline Connection . . .5-15
Charging via Secondary Alternator. . . .5-16
Charging via Solar Power 5-16
Recovery from a Zero State-of-Charge (SOC) 5-16
Reasons the System will not Charge . . .5-17
Power System Temperature Limits 5-17
High Temperature Operation 5-17
Cold Temperature Operation 5-17
Multiplex System 5-18
Systems Controlled By Firefly 5-18
Multiplex Home Screen/Monitor Panel . .5-18
Multiplex Secondary Screens. 5-18
Cleaning the Multiplex Touchscreens. . .5-19
Ceiling and Directional Lighting 5-19
ENTERTAINMENT SYSTEMS 5-20
Digital Media Player 5-20
Subwoofer 5-20
Garmen Vieo™ 5-20
TV 5-20
TV Antenna 5-21
Cleaning Antenna Housing. 5-21
TV Wall Plate Power Supply 5-21
Operation 5-21
Antenna Pre-Wiring 5-21
Roof Mounted Satellite 5-21
Portable Satellite Antenna 5-21
Connected RV Antenna Pre-Wire 5-21
APPLIANCES 5-22
Maintenance 5-22
Air Conditioner 5-22
Cooktop. 5-22
Ceiling Vent Fan 5-22
Thermostat and Rain Sensor 5-23
Cleaning Instructions 5-23
Exhaust Vent 5-23
Operation 5-23
Cleaning Instructions 5-23
Fuse 5-23
Hydronic Heating and Hot Water System . . .5-24
Heater and Water Heater Operation - Shore Power 5-24
Water Heater Only Operation - Shore Power 5-24
Heater and Water Heater Operation - Boondocking 5-24
Water Heater Only Operation - Boondocking 5-25
Storage Mode. 5-25
Safe Operation 5-25
Maintenance 5-25
Microwave Ovens 5-25
Refrigerator 5-25
Operation 5-25
Start up 5-25
Defrost and Cleaning 5-25

General Information and Cleaning

The interior of each Airstream Touring Coach has been designed for comfort, convenience, durability, and appearance. How you use it and how you take care of it, naturally, depends on you. However, if you learn to operate the interior components and take care of them and the touring coach properly, this knowledge will add to your pleasure, as well as the long life of your touring coach. All material should be professionally dry cleaned to remove any overall soiled condition.

Upholstery

The best way to keep your Ultraleather seating looking great is regular cleaning to prevent excess dirt from accumulating. To help extend the life of the fabric, wipe up spills as soon as they occur. Clean with soap and water. Sanitize using disinfectants such as (1:5) bleach/water solution. For stubborn stains, wipe off with isopropyl alcohol as soon as possible. Thoroughly rinse all solution residue with clean water and air dry.

NOTE

Never remove cushion covers for separate dry cleaning or washing. Any tumble cleaning method can destroy the backing, and/or shrink or otherwise damage upholstery fabric.

Cabinets and Overhead Lockers

The furniture is manufactured from a high-pressure laminate and can be cleaned with soap and water, or you can use a common solvent on tough spots. Furniture polish can be used sparingly. Plexiglass doors must be cleaned with an anti-static cleaner and cloth. Windex or common ammonia products will damage the coating on the surface.

NOTE

Do not use any abrasive material, abrasive cleaners, cloths and pads as they will scratch the surface.

Aluminum Interior Skin

The metal interior skin on the ceiling is coated with a baked-on acrylic coating. Use soft rags or wash mitts always moving lengthwise with the grain of the aluminum. NEVER rub hard on the coating. Oil, grease, dust, and dirt may be removed by washing with a 5 percent solution of commonly used commercial and industrial multi-purpose detergent in water. Cleaning should be followed by a thorough clean water rinse. Drying the metal with a chamois or a soft cloth may prevent spots and streaks. When washing or waxing the metal, always wipe “with” the grain of the metal. A good grade of nonabrasive automotive paste or liquid wax once a year will increase the life of the finish.

⚠ CAUTION

Abrasive polishes or cleaning solvents such as automatic dishwasher or acid etch cleaners are too strong and should never be used. Rinse all grit from surface prior to washing. Use soft rags always moving lengthwise with the unit. NEVER rub with excessive pressure on the coating. Even the softest rag will damage the coating if excessive pressure is applied.

Counter Area

The countertops are made of a solid surface and can be cleaned with soap and water, or you can use a common solvent on tough spots. Do not use abrasive cleaners since they could scratch the surface. A protective pad should always be used under hot utensils or pans. A light sanding of minor damaged areas can repair the counters. The color of the material is constant and not just a surface coat.

Sinks

Cleaning can be accomplished using a mild liquid detergent on a soft cloth. A complete home owner’s guide for your sinks is supplied in your owner’s packet. Please read these instructions before use.

Luxury Woven Vinyl Floor

One of the best ways to keep the floor looking good is to wipe fabrics off on a weekly basis with clean water. This helps prevent dirt from becoming deeply embedded in the fabric and eliminates the need for more vigorous cleaning. For general or light cleaning, brush off loose dirt and wipe down the floor. Prepare a solution of water and mild soap such as dish washing liquid or household cleaner. Using a soft bristle brush to clean, apply a small amount of water and soap mixture to the stain. Rinse thoroughly until all soap residue is removed. Allow the floor to air dry. For more stubborn stains and mildew, prepare a solution of 1 cup bleach and 1/4 cup mild soap per gallon of water. Apply a small amount of bleach and soap mixture to the stain and blot with a sponge or clean towel. Rinse thoroughly to remove all soap residue. Allow to air dry. A citrus based cleaner like D-Limonene can be used for tough dirt and grease spots. Ammonium based products are NOT recommended. All cleaning products need to be rinsed off thoroughly and air dried after cleaning.

Rubber backing on doormats may result in yellow discoloration of the floor immediately beneath. Choose a natural fiber mat. Mats provided by Airstream are intended for use outside of the travel trailer. Rubber feet on furniture may cause staining. Remove them altogether or place coasters or felt pads between them and the floor.

CAUTION

Remember to protect the area around your flooring if using a bleach solution. Other fabrics may have an adverse reaction to cleaners containing bleach.

NOTE

The use of certain cleaning agents, including but not limited to powdered abrasives, solvents, and industrial strength cleaners is not recommended. Always follow the manufacturer's instructions. Check that the cleaner/polish is suitable for use with cushioned vinyl floor coverings.

Privacy Sun Shades

Privacy shades are provided for the front windshield and driver/passenger cab windows. The shades have magnets sewn into them that attach to the van.

Light brushing with an upholstery brush or gentle use of a vacuum cleaner will suffice in most situations. For heavy soiled conditions dry clean only. Washing the shades may void the warranty.

Wet Bath

To clean your fiberglass shower stall unit, use warm water and a liquid detergent. Do not use abrasive cleaners; they may scratch and dull the surface of your fiberglass unit. Stubborn stains can be removed with solvents such as turpentine, paint thinner, or acetone. Restore dulled areas by rubbing with an automotive-type liquid cleaner, and then put the soft glow back into the sides of your unit with a light application of liquid wax. DO NOT wax the shower bottom as it may become slippery leading to a fall.

CAUTION

Applying wax to the base of the shower floor is not recommended, as this could create an unsafe surface.

Shower Head

The shower head is designed to give maximum flexibility in usage, and provides for water-saving techniques when using your touring coach on self-containment. It can be held in the hand and moved about the body. Normally, the best water conservation procedure is to wet the entire body and then turn the water off. Apply soap, lather thoroughly, and then rinse the soap off.

Retractable Clothesline

A retractable clothesline is installed for your convenience in the shower stall. To use, pull the line from the base and attach it to the holder on the opposite wall. Turning the nut on the base will tighten the line.

Toilet

The touring coach toilet in your Airstream is a design that has been used for many years.

To flush, press the foot pedal, holding the pedal down until all solids have cleared. To add water press the pedal halfway.

NOTE

When you dump the bowl of the toilet, make sure all paper and solids have cleared the slide mechanism before you allow it to close. Failure to do so can cause the groove for the slide to become jammed and the slide will no longer close completely.

Please see the toilet owner's/user manual for warranty, user tips, and maintenance information.

Deodorizers and Biological Chemicals

There are many deodorizers and processing chemicals on the market in tablet, liquid, and powder form. These not only combat odor, but also stimulate the bacteria that works to dissolve the solids and tissues in your waste tank. These chemicals should be introduced through the toilet prior to use per the manufacturers directions. It's also important to always add a few gallons of water by filling the toilet bowl a few times and depressing the foot pedal.

Faucets

Lavatory Faucet

Airstream Part #602251

ITC, Inc. - Model 8W0619CP

Galley Faucets

Airstream Part #602898

Dehco - Model 231012

Airstream Part #602849

Moen - Model 7565SRS

Faucet Cleaning and Care

All that is needed to clean your faucet is a soft, damp cloth. Airstream does not recommend the use of scour pads, cleansers, or chemicals. The abrasive nature of these substances could damage the faucet's finish. A non-abrasive car wax will help to protect the finish.

Storage

Galley cabinets should have the heaviest items stored on the bottom and lighter items overhead. After loading, put skillets and canned goods on the floor or bottom shelf, and cereals and crackers in the overhead roof locker. Use unbreakable-type plates and saucers, and consider storing your dish towels around them.

Clothes hung in wardrobes should be kept on hangers that snap over the clothes rods to keep them from bouncing off on rough roads. Try to avoid large bulky coats. Layers of lighter clothing will usually keep you warmer, are more versatile, and are easier to store.

WARNING

Keep flammable material away from the furnace.

Driver and Passenger Seats

The driver and passenger seats are provided by Sprinter, sent out to be recovered by Airstream to match the interior decor.

The seat adjustment mechanism provided by Sprinter allows the seat to be moved forward or backward and swivel left or right. Buttons near the door handle are used to move the seat forward and backward. Pressing down on the handle, centered under the front of the seats, allows the seat to swivel. Return the seat to the full upright position before using the swivel adjustment. The heated seats are activated by switches located on the door, next to the seat controls. For complete details on seat adjustments, please refer to the Sprinter manual.

WARNING

Adjust the driver's seat so that you can easily reach and operate all controls. Make sure the seat is locked in position. Do not adjust driver's seat swivel or fore and aft mechanism while vehicle is moving. The seat could move unexpectedly causing loss of control.

Captain's Chairs, Second Row

The captains chairs have three adjustments. A lever on the side of the seat reclines the seat back. A lever on the seat pedestal under the front of the seat allows the seat to be adjusted forward or back, and a lever on the pedestal under the side of the seat allows the seat to swivel. Return seat to full upright position before using swivel adjustment.

CAUTION

Seat backs on cab and second row seats must be returned to full upright position and seat moved forward before seat is swiveled. Failure to do so could result in damage to the seats upholstery, the wall panels, and the seats decorative skirt.

WARNING

All seats must be locked in the forward facing position prior to operating the vehicle.

Rear Lounge/Bed

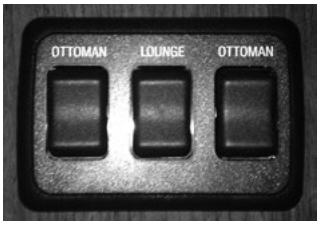

To convert the lounge area into a bed, remove the headrests and slide the aluminum extension out from under the lounge seat. Place the provided rectangular cushions across the extension and rear cubbies. Hold the switch (shown above) under the passenger-side overhead storage locker until the lounge flattens completely. This same switch is on the driver's side in the Interstate GT model. Lower the powered ottomans on each side of the coach to complete the setup.

WARNING

Keep your furniture and family safe from fires caused by careless smoking. Do not smoke when drowsy. Remove immediately any flowing ash or a lighted cigarette which falls on furniture. Smoldering smoking material can cause upholstered furniture fires.

WARNING

Side Ottomans are not to be used as seating while the vehicle in motion as there are no seat belts available.

NOTE

Operate ottomans and sofa separately to avoid tripping the thermal breaker. If breaker is tripped, wait until it resets and operate one at a time.

Pedestal Table

Interstate Touring Coach's are equipped with a pedestal table. On Interstate GL models, the top is stored between the galley and the captains chair. The pedestal leg is stored behind the lounge accessed by opening the rear cargo doors. The pedestal table can be installed in the floor sockets located between the dinette seats and behind the captains chairs. The pedestal leg is inserted into the sockets and twisted to lock into place. To remove, depress the black button and twist the leg to release.

Interstate GT models are equipped with a removable table which is stored behind the driver's seat. To remove from the mount, slide the driver's seat up towards the steering wheel for clearance. Loosen the knob at the top of the table and rotate the bracket. Pull the table out, being careful not to damage the table or the paneling. Turn the table over and remove the table leg by loosening the handle and sliding it off. Insert the leg into the holder on the base of the rear lounge and adjust to the desired height. Install the table top onto the leg and tighten in the desired position. Reverse the operation for storage.

WARNING

Return table top and pedestal to their respective storage positions before moving the vehicle. In a emergency stop or accident the top and pedestal could cause personal injury and/or death.

Collapsing Clothes Rod

A collapsing clothes rod is located below the rear overhead, behind the rear lounge/bed.

Power Shades

The Interstate comes with power shades controlled by the Multiplex Systems touch screen control panels located in the front and rear of the touring coach. The shades feature a mechanical limit switch to prevent accidental loss or change of limits due to power surges or power outages. The shades will retain their pre-set limit stops even if the shade is pulled down manually by mistake. These presets are set at Airstream and shouldn't need adjusted.

The multiplex panels allow for control over individual shades as well as a master control button to raise or lower all the shades at once. Pressing either the up or down arrow next to the shade you want to control will raise or lower the shade. If the same arrow is pressed before the shade reaches its pre-set limit stop the shade will stop at its current position.

Electrical System Overview

Power Center

The Power Center is a self-contained 120 Volt AC (VAC) power distribution center utilized in recreational vehicles. It houses the coach's circuit breakers and fuses. Its primary function is to provide circuit protection for all the 120 VAC loads in the touring coach and is central to the overall electrical system. It distributes 120 VAC power to the appliances. It also distributes 120 VAC to the converter, which converts 120 VAC to 12 Volt DC (12V) to power 12V systems.

The Power Center distributes incoming power from two sources: Shoreline power when connected to an external 120 VAC power supply (city power) and the Volta Power System's Flex Pack (lithium-ion battery pack) via the 58V DC to 120 VAC AC inverter; see Electrical System Operation on page 5-11.

All Interstate models have the Power Center installed at the base of the driver's side ottoman. Open the decorative door to access 12V fuses and 120 VAC breakers.

WARNING

The power center is a centralized power switching, fusing, and distribution center. The potential of lethal electrical shock is present in this box. Inadvertent shorts at this box could result in damage and/or injury. All servicing of this box should be done by a qualified Service Technician.

Circuit Breaker Protection

Standard residential-style (resettable) circuit breakers provide circuit protection for all 120 VAC loads. Airstream has installed breakers per RVIA (NEC) listing requirements for the touring coach.

The 30 amp main breaker feeds individual branch breakers. The branch-breakers protect individual loads, which are identifiable by the affixed labels. Shutting off the main breaker will remove power to all branch loads (except for outlets/receptacles on the inverter circuit when the inverter is enabled, see GFCI below).

A circuit breaker's ON/OFF switch function operates like a light switch: up is ON, and down is OFF. If an overload or short occurs, the breaker will snap to the OFF position to protect the connected circuit. As a result, any device running on the circuit will lose power. Before attempting to reset the breaker, consider the cause. If a connected device is faulty or uses a higher amperage than the circuit breaker's capacity, turn it off before resetting the breaker.

Before resetting the breaker, you need external AC power going to the breaker box. Firmly push the breaker switch to the OFF position and back to the ON position. If the breaker snaps back to the OFF position while resetting, a fault condition still exists and should be serviced by a qualified Service Technician. Suppose the breaker stays ON but snaps back OFF after turning on a possibly faulty appliance. In that case, a fault condition may exist in that appliance that will require service by a qualified Technician.

Ground Fault Circuit Interrupter (GFCI)

All outlets/receptacles on your Touring Coach are GFCI protected. The GFCI breaker provides reliable overload and short-circuit protection. GFCI breakers protect against ground faults and provide additional safety to the occupants of the touring coach on all outlets/receptacles. A ground fault occurs when current travels along an unintended path to ground, possibly through water or a person, which may result in an electric shock. The GFCI compares the amount of current going to and returning from the device plugged into the circuit's outlet/receptacle. When the amount of current going to the device differs from the amount returning, the GFCI interrupts the current within a fraction of a second, removing power from the circuit, and protecting the user.

Each GFCI circuit breaker is calibrated to trip with a ground current of 5 mA or more. Since most people can feel as little as 2 mA, a shock may be felt. The shock should be of such a short duration that the effects would be reduced, less than what would normally be a dangerous level. However, persons with acute heart problems or other conditions that can make a person particularly susceptible to electric shock may still be seriously injured.

While the GFCI circuit breaker affords a high degree of protection, there is no substitute for knowing that electricity can be dangerous when carelessly handled or used without reasonable caution.

The system incorporates GFCI breakers that implement an auto-self-test functionality. When turned off, these breakers require external AC power to be present before they can be turned back on. If power is present, and the breaker refuses to stay on, consult an electrician or certified RV technician.

WARNING

The GFCI circuit breaker will NOT reduce shock hazard if contact is made between a HOT load wire and a neutral wire or two HOT load wires. GFCI circuit breakers provide protection only to the circuit to which it is connected. It does NOT protect any other circuit.

GFCI Breaker Test

Perform this test on the GFCI circuit breaker each month and record the date.

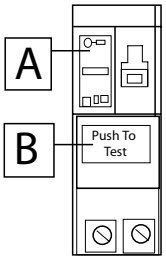

1. With handle A in the "ON" position, press PUSH TO TEST button B.
2. Handle A should move to the TRIP position, indicating that the GFCI breaker has opened the circuit.
3. Move handle A to the "OFF" position and back to the "ON "position to restore power.

If the device remains on when the Test button is pushed, the GFCI is not working properly or has been incorrectly installed (wired improperly). If your GFCI is not working properly, call a qualified, certified electrician who can assess the situation, rewire the GFCI if necessary, or replace the unit.

NOTE

Most fuses will require a qualified technician to access and replace. Contact your dealer or Airstream Service Center.

120 volt System

City Power Overview

When plugged into shore power, the Volta Power System Flex Pack samples incoming power for a few seconds to ensure uniformity requirements exist. If incoming power meets the requirements, the Volta System begins charging the Flex Pack battery (house battery). If the Volta System is on when establishing a shoreline connection, the Battery Power On/Off Pushbutton (battery disconnect) LED will remain solid green. If the System is off when establishing a shoreline connection, the Pushbutton LED will flash green. For more information, see Pushbutton LED Flash Codes on page 5-12 and see Charging via Shoreline Connection on page 5-15.

120 VAC shoreline power (city power) enters the coach through the SmartPlug Cordset shoreline connection, Smartplug inlet, and distribution panel, where it is distributed to each appliance or receptacle. The 120 VAC electrical system provides power to operate the A/C, converter, and 120 VAC receptacles for portable appliances.

The inverter/charger converts shoreline 120 volt alternating current (120 VAC) to direct current (DC) power to charge the battery pack and diverts 120 VAC shore power to 120 VAC systems.

All wire, components, and wiring methods meet federal and state requirements. The wiring is protected by circuit breakers when connected to external AC power. The circuit breaker panel for the 120 volt system is inside the Power Center; see Power Center on page 5-7.

If an outlet or appliance is not working, check your touring coach circuit breakers and the breaker at the shoreline connection. If a breaker continues to trip after you have reset it several times, your circuit may be overloaded with devices/appliances, or there may be a short in the circuit. The Energy Management System (EMS) should shed loads to prevent breakers from tripping. Ensure the Power Source on the electrical screen matches your incoming power source. If all else fails, try lessening the load on the circuit by turning off devices while using external appliances like vacuum cleaners. If that does not solve the problem, consult an Airstream Service Center.

WARNING

Do not connect the Volta System to a 240 VAC outlet. Connecting to a 240 VAC outlet may result in permanent damage not covered by warranty.

Energy Management System (EMS)

Overview

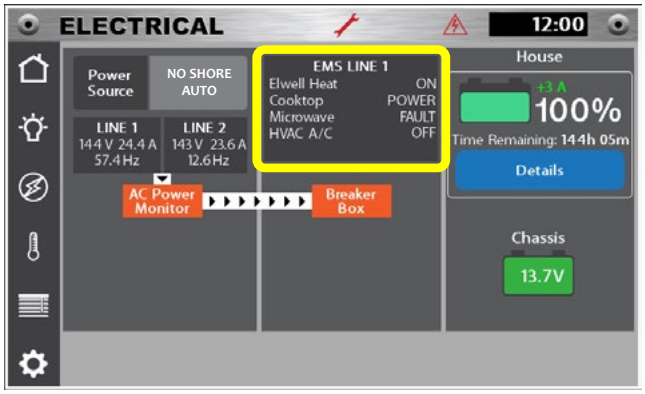

Screen images may vary slightly with continuous improvements/firmware updates

The Energy Management System (EMS) is a function of the Firefly Multiplex system. The electrical screen of the central Multiplex panel (example above) displays EMS data.

The system monitors the total current draw of the coach's 120 VAC power system. When running multiple appliances or turning on devices like coffee makers and vacuums, the system will temporarily shed other loads (reduce/remove power from certain devices) like the heating/hot water electric element to prevent nuisance breaker tripping.

Upon decreasing the additional demand, and approximately 2-3 minutes pass, the system will automatically power up appliances and components in reverse sequence.

Load shedding occurs in the following sequence depending on the demand:

1. Heating/Hot Water System Electric Element
2. Air Conditioner Compressor
3. Cooktop
4. Microwave

The number of appliances and devices the system can run simultaneously depends upon available power. With a 15A shore connection, you may be limited to one or two appliances before the EMS will begin to shed loads.

Power Source selections for the EMS range from 15A to 30A, depending on your current power source. Navigate to the electrical screen on the central multiplex touchscreen panel to see the current selection next to the block titled Power Source; see Multiplex System on page 5-18.

12 volt System

Your touring coach has a powerful 12,000 watt-hour (12 kilowatt-hour) lithium-ion 58 volt battery pack (Flex Pack). State-of-Charge (SOC) is the primary concern when using only battery power (boondocking) from the onboard battery pack. To learn how to monitor SOC, see the following section titled Electrical System Operation, and see Home Screen on page 5-13.

With the Volta System on, dual 30 amp converters will convert the battery's voltage from 58 volt direct current (DC) to 12 volt DC to power 12 volt devices.

The majority of electrical power in your Airstream is 12 volt: lights, awning, electronics, shades, and more; everything except the roof A/C, hydronic heating and hot water electric element, outlets/receptacles, cooktop, and microwave oven (note: some of these appliances have 12 volt electronic boards and require 12 volt power to operate).

Power is routed from the Volta Power System to the 12 volt distribution panel and through its branch circuits to the rest of the touring coach. All 12 volt current is routed to a 12 volt fuse block. Power from the fuse block goes to a busbar holding Type 2 thermal breakers. The thermal breakers feed electrical components throughout the touring coach.

⚠ CAUTION

Thermal breakers break contact when overheated by a short or overload in the wiring. These breakers automatically reset when cooled down. A breaker continually overheating and breaking contact should be investigated by a qualified service technician.

NOTE

The engine battery and house battery are isolated from each other, preventing the two systems from drawing down simultaneously.

Solar System

The rooftop solar panels installed on your Airstream help maintain battery charge. The solar system's solar charge controller gathers energy from the individual solar panels and stores it in your battery. Under full sun, solar watts may be depicted on the Volta System display as Power Flow.

To optimize solar charging, ensure the panels are clean and not shaded by trees or structures that might block the sun. Please refer to your owner's packet for reference material that discusses the solar system and its operation.

The solar panels will not provide any charge to the battery if the Battery Power (battery disconnect) pushbutton is off.

For more information on solar power, see Charging via Solar Power on page 5-16 and see Solar Ports on page 6-10.

NOTE

The solar panels and charge controller are designed to help maintain a battery charge, and are limited in their ability to provide a charge to the battery. Additionally, the solar panels will not provide any charge to the battery if the Battery Power pushbutton is off.

Electrical System Operation

Power System Overview

Your touring coach has a powerful 12,000 watt-hour (12 kilowatt-hour) lithium-ion 58 volt battery pack (Flex Pack), a 3,200 watt pure sine wave inverter, two 30 amp converters, and a secondary 58 volt alternator. These components work in conjunction to provide a seamless experience whether hooked up to shore power, boondocking on battery power, or driving to the destination.

The information in this manual touches on the highlights of the system, its components, essential functions, and operation. Before operating the Volta Power System, read the VOLTA FLEX SYSTEM USER MANUA**L** in your Owner's Packet for important warnings/limits, operating instructions, and tips for using the system. Visit Volta's support and education web page, where you will find a series of how-to videos, literature, and FAQs: https://voltapowersystems.com/support

Volta Flex System Components

Flex Pack

The Flex Pack is the source of house energy for your touring coach. It houses a 58 volt lithium-ion cell battery pack and Battery Management System (BMS).

Battery Management System (BMS)

An internal component of the Flex Pack that monitors, optimizes and protects the Flex Pack, and performs various charging functions.

Inverter/Charger

The inverter/charger converts direct current (DC) battery power to alternating current (AC) power to run appliances and outlets/receptacles.

The inverter/charger also converts shoreline AC power to DC power to charge the Flex Pack battery pack.

Since electrical service varies from one source to the next, to prevent the shore-power breakers from tripping, it's important to ensure that your system's charge amps are properly adjusted. To change this setting, navigate to the Inverter/Charger screen on the Volta touchscreen panel. Press the arrows to select the charge rate that matches your chosen power source.

For more information on how to operate the inverter/charger using the Volta touchscreen interface, see Inverter/Charger Screen on page 5-14

WARNING

Do not connect the Volta System to a 240 VAC outlet. Connecting to a 240 VAC outlet may result in permanent damage not covered by warranty.

NOTE

Even when not using 120 VAC, if left on, the inverter will draw a small amount of power from the battery. Turn the inverter off if you are not using outlets or running air conditioning or other appliances to conserve battery power.

DC-DC Converter

Converts the battery's voltage from 58 volt direct current (DC) to 12 volt DC to power 12 volt devices like LED lights, electronics, and the refrigerator.

Secondary Alternator

The powerful 58 volt secondary alternator charges the Flex Pack (house battery) simply by driving. It is also the fastest means to charge the battery. A shoreline connection can provide at maximum a 30A charge rate, whereas the alternator is capable of producing 100+ amps; see Charging via Secondary Alternator on page 5-16.

Battery Power On/Off Pushbutton

Turns the Volta System on and off and functions as the Coach's battery disconnect; see Battery Power On/Off Pushbutton on page 5-12.

Volta Flex System Component Functions

When camping off-grid: The 3,200 watt pure sine inverter turns battery power into 120 Volt AC power to run appliances and outlets/receptacles. The DC-DC converter converts the battery's voltage from 58 volts direct current (DC) to 12 volt DC to power 12 volt devices like LED lights, electronics, and the refrigerator.

When connected to shore power: The inverter/charger converts shoreline 120 Volt AC power to direct current (DC) to charge the battery pack. With the Volta System on, the dual 30 amp converters provide continuous 12 volt power to the LED lights, electronics, and refrigerator.

When driving: With a secondary 58 volt alternator, the ability to charge the house battery (Flex Pack) in a relatively short amount of time solely by driving enables owners to go farther and stay longer without needing a shoreline connection.

WARNING

Only Volta technicians or trained professionals with in-depth knowledge of Volta Systems should service these components. The potential of lethal electrical shock is present. Tampering with any part of the system could cause irreparable damage to the system and/or void your warranty.

Battery Power On/Off Pushbutton

Turning ON the Volta Power System

Press the Battery Power ON/OFF Pushbutton at the side door entrance to turn the system ON. When pressed, a 2 to 5 second system check occurs. If all checks are successful the Flex Pack's internal contactor will engage supplying power to all Volta components and the coach's power system will power on. Once the system is on, the button LED will turn solid green. Press the button only once. If the system does not power on with in a few seconds, wait 30 seconds before pressing the button again.

Turning OFF the Volta Power System

Press the ON/OFF pushbutton to turn the system OFF. When pressed, a few seconds will pass before the pushbutton LED turns off and the touchscreen shuts down, signaling that the Volta System is turned off. If connected to shoreline power, the system will enter Charge Only Mode, see below.

Charge Only Mode

If the System is off and the coach is connected to shoreline power, the system will enter Charge Only Mode. The pushbutton LED flashes green continuously, and the Volta System allows the Flex Pack to charge, but all system loads are disabled. You will not be able to operate electrical systems while in Charge Only Mode. To operate electrical systems, press the Battery Power Button ON.

NOTE

When in Charge Only Mode the Volta display will remain on until it enters sleep mode.

Pushbutton LED Flash Codes

Green: System ON

Green Flashing: Charge Only Mode; see above

Yellow: Too cold to charge; see Cold Temperature Operation on page 5-17

Yellow Flashing (5 seconds): System starting

Yellow Flashing (dim): System shutting down

Yellow Flashing (30 seconds): System fault causing shut down; see Alerts Screen on page 5-14

Volta Touchscreen Display

Monitor and control the Volta System from the Volta touchscreen display panel. The screen will come on a few seconds after the system is powered on. The system defaults to the home screen which displays a variety of system information, alerts, and navigation icons.

The navigation icons in the lower left corner of the screen allow you to select from the Home Screen and three secondary screens: Alert Screen, Settings Screen, and Inverter Screen.

NOTE

The touchscreen display will enter sleep mode when not in use. Touch the screen to wake.

Home Screen

State-of-Charge (SOC) Gauge: Central to all of the status indicators is the SOC Gauge. It displays the approximate SOC of the Flex Pack (house battery) in percentages from 0% to 100%. The SOC gauge changes color and flashes colors to communicate basic system and fault states as follows:

Solid Green: Normal Operating SOC (above 20%)

Solid Yellow: Low SOC (10-20%)

Solid Red: Very Low SOC (less than 10%)

Flashing Red: High Temperature

Slow Flashing Blue: Too Cold to Charge

Time Remaining: Displays the approximate run time remaining on the battery. This value changes based on system load. For information about system runtime, see System Runtime on page 5-15.

Current Time: Displays the current time.

Pack Temp: Displays the temperature of the Flex Pack. For information on temperature limits, see Power System Temperature Limits on page 5-17.

Power Flow: Displays value of power flow. A negative value indicates the current power consumption in watts. A positive value indicates the rate of charge to the Flex Pack in watts.

System Indicators: Shown in the upper right and left corners of the Home Screen, these indicators communicate the following information:

	Flex Pack (House Battery) is ready for charging from alternator, or is currently charging from alternator
	Flex Pack Temperature Low Flex Pack is too cold to charge
	Heating Pads On. Heating pads are on and actively warming the Flex Pack (house battery)
	Pack Temperature High: Flex Pack is at or near the high temperature shutdown limit

Menu Bar - Navigation Icons/Buttons: Shown in the lower left corner, press these icons to navigate to and from the Home Screen and Secondary Screens:

	Home Screen Icon: Select to navigate to the Home Screen
	Alert Icon: Select to navigate to the Alert Screen
	Settings Icon: Select to navigate to the Settings Screen
	Inverter Icon: Select to navigate to the Inverter Screen
	Sleep Icon: Select to put the touchscreen to sleep - touch the screen to turn it back on

Alerts Screen

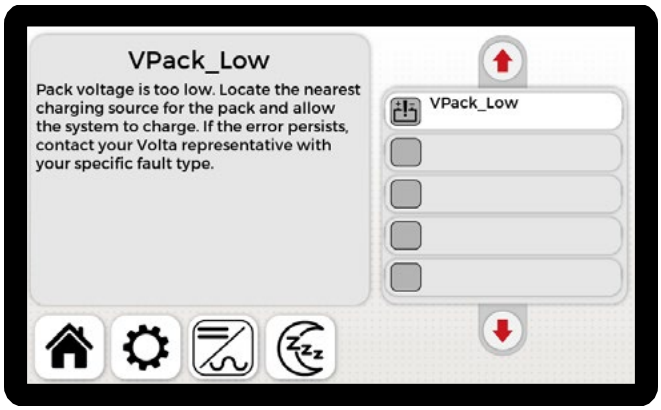

Use the up and down arrows to navigate and select alerts to show a description and potential troubleshooting of the selected alert.

Settings Screen

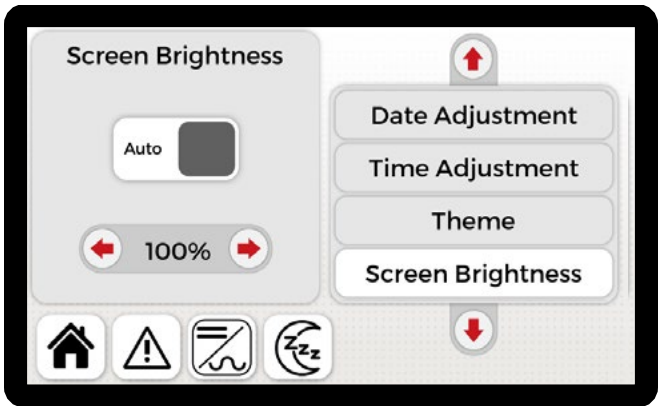

Use the up and down arrows to navigate through the available settings. Some settings screens will require a password. These screens include settings that should only be adjusted by a Volta approved technician.

Inverter/Charger Screen

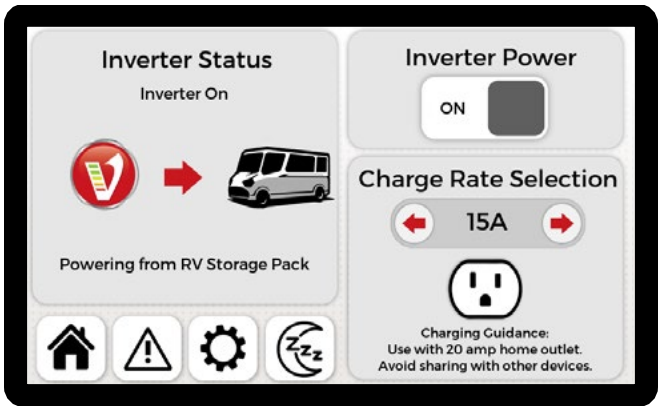

The Inverter/Charger Screen displays the various controls, settings, and status of the inverter/charger.

Inverter Power: Select the On/Off button to enable the inverter to power 120 volt AC-powered appliances like the air conditioner and power outlets/receptacles in and outside the touring coach. Be aware that if the inverter is on, even when not using 120 VAC power, it will still draw and consume a small amount of the house battery's charge. When not in use, you can elect to turn the inverter off to conserve battery power.

Charge Rate Selection: The charge rate defaults to 15 amps (15A) and can be adjusted up or down using the arrow buttons. The charge rate should be set at or below the power available at your shoreline connection but should not be higher as this may cause a breaker at the shore connection to trip. For example, if your shoreline connection is 15A and you set the charge rate to 30A, the system will draw more power than the shoreline connection can provide, potentially causing the breaker at your shoreline connection to trip.

There may be circumstances that can cause a breaker to trip even with it set lower than your power supply. For example, if you connect at home to a 20A power supply and set the charge rate to 15A but forget that something else is running on the same home circuit, like an appliance that draws 10A. In this situation, your total draw would be 25A resulting in a tripped breaker at your home's breaker panel. Airstream recommends having a dedicated circuit to prevent interference.

Charging Guidance: Volta takes the guesswork out of setting up a shoreline connection to charge. The Inverter Screen displays informative Charging Guidance below the charge rate selection that can help you determine which selection to make for your circumstance. For most situations, you need only plug into a shoreline connection, and the battery will charge at the default 15A rate. If a higher charge rate is available and you want to charge the system faster, raise the charge rate to match your power source.

MyVolta App

Download the MyVolta app to connect to the Volta System Bluetooth module installed with the Volta System. Users in proximity to the Bluetooth module can monitor system stats on their mobile device, including:

- Estimated Runtime Remaining
- Pack Temperature
- Charging Status
- Power Usage
- Performance Data
- Warnings, Faults or Errors

The MyVolta app is free to download on iPhone from the app store and other devices from the Google Play store. Search your device's app store for MyVolta or click on one of the icons below. Follow the on screen instructions to connect to your Volta System:

MyVolta Cloud

MyVolta Cloud allows you to connect and view the MyVolta app information from virtually anywhere. Using MyVolta Cloud requires two internet-connected devices, one of which must remain in the touring coach within range of the Volta Bluetooth Module.

Both devices must have the MyVolta app downloaded, be signed into the same Volta account and have consistent internet access through data, campground WIFI, router, etc.

The synced device will send system information to the MyVolta Cloud, allowing the second, unconnected device to access system data anywhere it can connect to the internet.

Battery Charge

System Runtime

The system allows for approximately 8-10 hours of air conditioning while operating on battery power. However, the time it takes to deplete the house battery from a full charge depends entirely on usage that could significantly affect runtime. Because usage varies so greatly due to various user and environmental factors, the best way to ensure enough battery power remains is to monitor the State-of-Charge (SOC); see Home Screen on page 5-13.

The approximate run time is displayed on the Volta Home screen as Time Remaining. This value changes based on system load; see Home Screen on page 5-13

You can roughly calculate an approximate runtime. If your power flow indicator on the Volta panel is reading 1000W, then based on the battery capacity of 12 kilowatt-hours, you can approximate 12 hours of runtime remaining.

With the large capacity battery and the ability to charge it simply by driving, your runtime can easily be extended; see Battery Power On/Off Pushbutton on page 5-12.

The two most significant loads on the battery are heating and cooling. The more these systems run, the more energy consumption.

If the inverter use is extensive, the house battery will deplete much quicker. Even when not using 120 VAC power, the inverter will draw a small amount of power if left on. Turn the inverter off if you are not using outlets or running air conditioning/heating to conserve battery power. Consider reducing the temperature on the thermostat when using the heater and increasing the temperature on the thermostat when using the air conditioner. If you plan on staying longer without access to a charge, you will want to conserve your battery power by using as few lights and appliances as possible.

Charging via Shoreline Connection

Begin by plugging the Smartplug Cordset (shoreline power cord) into an external shoreline power supply (city power). Check that the cordset LED indicator light is blue and plug the other end into the coach's roadside SmartPlug inlet; see SmartPlug Cordset on page 6-10.

The Volta Power System defaults to a 15A charge rate and may need to be changed based on your connection. For more information about setting the charge rate on the Volta touchscreen; see Inverter/Charger Screen on page 5-14.

When plugged into shore power, the Volta Power System Flex Pack samples incoming power for a few seconds to ensure uniformity requirements are met. If incoming power meets the requirements, the Volta System begins charging the Flex Pack battery (house battery). If the Volta System is on when establishing a shoreline connection, the Battery Power On/Off Pushbutton (battery disconnect) LED will remain solid green. If the System is off when establishing a shoreline connection, the Pushbutton LED will flash green. For more information, see Pushbutton LED Flash Codes on page 5-12.

If the Flex Pack does not begin to charge, the incoming power is likely not meeting the Volta System requirements. This feature protects the vehicle from brown outs due to insufficient power. Additionally, the system may not accept a charge if plugged into an electronic surge protector; see Reasons the System will not Charge on page 5-17.

In some older parks and other locations where three-pronged outlets are not available, certain precautions to ensure proper grounding and polarity must be taken. These precautions are listed below:

1. Attach the three-pronged plug to a two-pronged adapter. The third conductor line of this adapter has a short wire lead that must be grounded.
2. For proper grounding, connect the short ground lead to a grounded outlet box or to a cold water pipe. When no water pipe is available, drive a metal rod two feet into the ground and attach the ground lug to it, thus providing the unit with proper grounding.

NOTE

When the three-pronged plug can be used, there will be no problems with proper polarity or grounding with a properly-wired shoreline outlet.

RV owners are familiar with 30A outlets, so they may want to install a 30A outlet at their home. Unless this outlet is specifically installed as an RV outlet, the electrician may mistakenly wire the outlet to be 240 VAC, which is typically used for home appliances, such as electric dryers. RV outlets are 30A 120 VAC, but home 30A outlets are commonly 240 VAC. Do not connect to a 240 VAC outlet.

WARNING

Do not connect the Volta System to a 240 VAC outlet. Connecting to a 240 VAC outlet may result in permanent damage not covered by warranty.

Charging via Secondary Alternator

Your Airstream comes standard with a powerful 58 volt secondary alternator that can charge the house battery simply by driving. In fact, it is the fastest way to charge your battery. While driving, the system actively recharges the battery with as much as a 30% recharge after just 20 minutes and a full charge achieved in approximately 2 hours.

1. Turn ON the Battery Power Pushbutton switch (battery disconnect).
2. Drive the vehicle at approximately 35 MPH to achieve and maintain at least 1500 RPM. If 1500 RPM is not maintained, the Battery Management System (BMS) sends a signal to turn off the alternator until the BMS senses it is appropriate to turn it back on.

WARNING

Do not park and rev the engine to hold 1500 RPM as it could damage the engine and void your Mercedes-Benz engine warranty.

Charging via Solar Power

The solar charging system is primarily used to help maintain a charge between shoreline or alternator charging. The solar system is automated and does not require input from the user. For more information about the solar system; see Solar System on page 5-10

Recovery from a Zero State-of-Charge (SOC)

The Battery Management System (BMS) shuts down the Volta System if the house battery reaches a very low limit or 0% SOC. When this occurs the Volta On/Off pushbutton LED flashes yellow, the SOC is red, and the system shuts down.

To Recover using Shoreline Power:

1. Turn OFF the Volta System; if not already off.
2. Connect to shoreline power.
3. Select the appropriate charge rate; see Inverter/Charger Screen on page 5-14
4. Charge the system to at least 20% SOC before returning to normal operation and use.
5. Fully charge the system as soon as possible.

To Recover using Alternator Power:

1. Turn ON the Battery Power Pushbutton switch (battery disconnect); if not already on.
2. Drive the vehicle, at approximately 35 MPH to achieve and maintain at least 1500 RPM to charge the system until the SOC indicates at least 20% before returning to normal operation and use.
3. Fully charge the system as soon as possible.

Reasons the System will not Charge

There may be several reasons why the Volta System isn't charging, even while connected via shoreline:

- The State-of-Charge is too high. If you are attempting to charge the SOC to 100% from a SOC greater than approximately 90-95%, the system will need to deplete to below approximately 90-95% before the system begins to charge again.
- The Flex Pack is too cold or too hot to charge; see Power System Temperature Limits on page 5-17.
- The shore power connection does not meet the charging requirements controlled by the Flex Pack BMS. When plugged into shore power, the Flex Pack samples incoming power for a few seconds to ensure uniformity requirements are met. If incoming power meets the requirements, the Volta System turns on and begins charging the Flex Pack. If the Volta System does not turn on, or the Flex Pack does not begin to charge, the incoming power is likely not meeting the Volta System requirements. This feature protects the vehicle from brown outs due to insufficient power.
- The selected charge rate is not appropriate for the shore power connection. You may need to raise or lower the Charge Rate Selection; see Inverter/Charger Screen on page 5-14.
- If you're using a plug-in surge protector, but you're experiencing problems with your Volta System not connecting to the attached shore power, attempt the following test: Remove the surge protector and plug the shore cord directly into your vehicle. If your system is now able to receive shore power, it may be that your surge protector is not compatible with the Volta System.

Power System Temperature Limits

The Volta System is programmed with several operational temperature limits to protect the pack and prolong its life. For temperature limitations see Volta System Temperature Limits on page 9-29 and see Volta System Temperature Ranges on page 9-30.

The Volta touchscreen displays temperature indicators, heating pad usage, alerts, and the Flex Pack temperature. To learn about System Indicators, see Home Screen on page 5-13.

High Temperature Operation

The Flex Pack is designed with passive cooling. The BMS shuts down the Flex Pack or prevents charging at elevated temperatures to allow the Flex Pack to cool.

The Volta System charges normally and distributes power normally up to 116°F (47°C). At or above 116°F (47°C), the Battery Management System (BMS) prevents charging. At or above 134°F (57°C) the BMS shuts down the system. To protect the Flex Pack, avoid using or storing the Flex Pack at or above 134°F (57°C). Storage of the Flex Pack at elevated temperatures is not recommended, as it will reduce the lifetime and capacity of the Flex Pack.

WARNING

Do not expose the Flex System battery pack to high-temperature locations greater than 140°F (60°C). This includes intensive sunlight. Doing so may cause the Flex Pack to overheat and may result in a loss of performance and/or a shortened life expectancy.

Cold Temperature Operation

The Volta System is capable of powering electrical systems below freezing temperatures. However, if the Flex Pack temperature is too low, the system does not charge. For system operation in cold environments, and to maintain the Flex Pack at charge-accepting temperatures, the energy storage modules inside the Flex Pack are equipped with internal heating pads.

The internal heating system operates automatically when the Volta System is turned on (by the Battery Power Pushbutton) or connected to shoreline power in Charge Only Mode and when sufficient energy is available from the Flex Pack.

For tips on how to operate the system in cold temperatures, refer to the Volta Flex System User Manual in your Owner's Packet, and see *Cold Temperature Operating Strategies*.

Multiplex System

The Firefly Multiplex System provides advanced automation and mobile electrical solutions for your touring coach. Firefly is a multiplex network system that combines multiple signals across a media to reduce wires and simplify end-user control. The system combines all desired functions and controls of the touring coach into a simple touchscreen interface that allows you to control many systems.

Each icon illuminates when pressed, indicating the circuit is either on or off. When making selections, the display's various touch controls will change from white **OFF** to blue **ON**. Selections controlling circuits such as Light Master and Panel Lights typically do not change from white to blue.

Systems Controlled By Firefly

- All lights (inside and outside)
- Power awning and awning lights
- Shades
- Roof vent
- Climate
- Tank monitoring (fresh, black, grey tanks)
- Battery voltage
- Tank heaters
- Water pump
- Energy Management System (EMS); see Energy Management System (EMS) on page 5-9

There are several touchscreen control panels for the multiplex system. The central (main) touchscreen control panel is in the front roadside roof locker behind the driver's seat, with remote touchscreens placed throughout the touring coach. While all screens have controls for all the major systems, the central panel has additional status and system information features not found on the secondary panels. The circuit control board for the system is below the curbside ottoman.

NOTE

The Multiplex System is self-resetting should a circuit trip. The owner should never need to reset the system for any reason. If the main control panel or remote panels are not operating, this could indicate a short in the wiring that will require service by a certified technician.

Multiplex Home Screen/Monitor Panel

Screen images may vary slightly with continuous improvements/firmware updates

The Home screen displays fluid levels of the Fresh Water, Grey water, and Black Water tanks. All fluid monitoring systems are factory calibrated to the tank capacities of each model. Sender pads are installed and adhered to the sides of the holding tanks. The sender pads scan the level through the tank wall using the sender's microprocessor programming.

The Home screen also displays the status and settings of the major systems of the touring coach, including the voltage status of the House and Chassis batteries.

Multiplex Secondary Screens

The navigation bar on the left side of the screen allows you to select from the five secondary screens: Lights, Electrical, Climate Control, Shades, and Settings (see next page for examples). From here, you can navigate to additional screens that serve a variety of functions.

WARNING

You may encounter Warning screens when entering settings. Some Changes will affect functions of the touchscreens and your touring coach and should only be changed by a trained technician.

Screen images may vary slightly with continuous improvements/firmware updates

Cleaning the Multiplex Touchscreens

To clean the glass surface of the LCD touchscreens, power down the system and then gently wipe it with a soft, slightly damp cloth (using ONLY minimal amounts water or lens cleaner). Ensure the LCD is fully dry before powering the system up again.

WARNING

The components of the Firefly system must not be exposed to liquids or moisture of any kind (including the use of any cleaning agents). The only approved exception is cleaning of the glass surface of LCD touchscreens.

Ceiling and Directional Lighting

The Multiplex System touchscreens control the LED lighting throughout your Airstream. The “Home” and “Lights” screens have a “Light Master” switch that will allow you to instantly turn all the interior lighting in your touring coach, on or off.

Light Master Memory Feature:

The Light Master function has a memory. If you turn off individual lights and then press Light Master OFF, it will recall what lights were on the next time you press Light Master ON, and only those lights will come on.
Hold the Light Master ON for more than 1 second to reset the memory and turn on all the interior lights.

Light Master **LOCK** Feature:

If Light Master OFF is held or pushed twice, the Light Master On will not respond. Hold the Light Master ON to resolve.

NOTE

Since your Airstream has LED lighting, there are no lights to change. If an LED light stops functioning, it will require service or replacement.

Entertainment Systems

Digital Media Player

The touring coach comes equipped with a Fusion® Stereo with an LCD color display. The stereo features several source options such as Bluetooth, FM radio, AUX and USB connections. See the Fusion Quick Start Manual for complete operating information.

Download the Fusion-Link Remote Control App to adjust the volume, change the source, and control other stereo functions using compatible devices.

The Fusion-Link app is free to download on iPhone from the app store and other devices from the Google Play store. Search your device's app store for Fusion-Link or click on one of the icons below:

NOTE

If the Battery Power pushbutton (battery disconnect switch) does not power off the radio it will need to be turned off by pressing the power button on the radio.

Subwoofer

A dedicated volume control is installed in the overhead compartment near the central multiplex screen. Use the control to raise or lower the subwoofer to the desired volume.

Garmen Vieo™

The Garmen Vieo™ may be installed in select units and is part of a fully integrated RV infotainment system. It combines Garmen navigation with premium Fusion entertainment in a single 10" portable display. The 10" display provides a touchscreen interface for the infotainment system. It can control the system in and around the coach while undocked.

To undock the display, tilt the display toward you by pressing the bottom edge of the display inward while pulling the top edge of the display toward you. This method keeps the bottom of the display seated in the dock and helps to prevent dropping. After the display releases from the magnet, carefully remove it from the mount.

To dock and charge the display, place the bottom edge of the display into the dock. Tilt the top of the display toward the dock until the magnets pull the display into the correct position.

A series of helpful tutorial videos are available on Garmin's website.

How-to videos are also available on the display. To locate them, if you are not already on the Homepage, navigate to it by touching the small circle icon at the bottom-center of the screen. Once you are on the Homepage, tap the large white circle (with six black dots) on the right-hand side of the screen to go to the Menu page. Once you are on the Menu page, you will find two tabs on the left-hand side of the screen, the Navigation tab and the Tools tab. Select the Tools tab. Once you are on this screen, scroll by touch to find the Owner's Manual, containing how-to videos.

To enhance the features of the Garmen Vieo™, download and connect the Garmen Drive app. The Garmen Drive app is free to download on iPhone from the app store and other devices from the Google Play store. Search your device's app store for Garmen Drive or click on one of the icons below:

TV

The Interstate Touring Coach is equipped with an LED HDTV and prewired for installation of a Blu-Ray player. Please refer to the documentation included in your owner's packet for instructions on their use.

TV Antenna

The installed omnidirectional antenna provides excellent reception of VHF/UHF TV channels. The TV antennas compact modern styling is unobtrusive and blends well with the designs of recreational vehicles.

The amplified signal maximizes signal strength to provide the best TV reception available in your area. The antenna receives free VHF, UHF and FM/AM signals. Manufactured with durable automotive-grade plastic, the antenna is weatherproof, UV-protected and resistant to rust.

Cleaning Antenna Housing

The antenna is constructed with an automotive-grade plastic. Clean only with mild soap and water. Use no solvents, alcohol, or cleaning fluids. Do not power wash any part of the base mount of head of the antenna.

TV Wall Plate Power Supply

The wall plate/power supply provides 12 VDC to the antenna as well as antenna signals to two TV sets. Cable input from the outdoor receptacle connects to the wall plate and may be switched so either antenna or cable/satellite signals may be watched.

Operation

To receive cable signals from the exterior inlet: Press switch to OFF position. The light on the wall plate will go (OFF) showing that power is no longer connected to the antenna and that both TV sets are receiving signals from the outdoor receptacle. To receive signals from antenna: Press switch to ON position. The light on the wall plate will come (ON) showing that power is connected to the antenna and both TV sets are receiving signals from the antenna.

Antenna Pre-Wiring

Roof Mounted Satellite

The touring coach is pre-wired with a coax cable for a roof mounted satellite antenna. One end of the cable is coiled above the rear center roof locker above the removable interior top panel, the other end is behind the removable entertainment cabinet side panel where the TV booster is mounted. A receiver can be placed inside the cabinet. An HDMI cable is located in the center roof locker and runs to the rear or wardrobe TV.

Portable Satellite Antenna

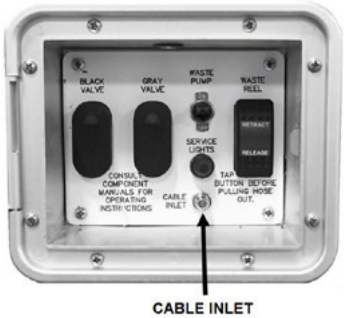

The touring coach is also pre-wired for a portable satellite antenna or external cable hookup. The exterior inlet is located on the side of the touring coach and is labeled for your convenience. The interior pre-wire, consisting of a two-pin power/ground connector and a coax cable pigtail, is located in the front roof locker under where a Blu-Ray player can be placed.

Connected RV Antenna Pre-Wire

Your Airstream Touring Coach is pre-wired with a Connected RV high gain, multi-band antenna. This antenna, along with the Airstream router (sold separately), provides access to the internet by creating a local area network. The pre-wired connection is located in the rear overhead storage compartment.

NOTE

When purchasing an Airstream router to activate the Connected RV features, a data plan will be required. Instructions on setup and data plans will be included with the router.

Appliances

All appliances are delivered to Airstream, Inc., with in-depth owner's manuals. Those manuals are included in the delivery case supplied by your dealer. The manuals may contain Warnings, Cautions, and operating instruction that should be read and followed before operating the appliances.

The information contained in the appliances manuals supersedes any information contained in the Airstream Interstate Owner's Manual on appliances. If you believe contradictory information on appliances is contained in this manual, or If any appliance manual(s) have not been provided with your vehicle, contact your dealer, the respective appliance manufacturer, or Airstream Customer Service at 937-596-6111 or write:

Airstream Factory Service Center

428 W. Pike Street

P.O. Box 629

Jackson Center, OH 45334-0629

(937) 596-6111

Maintenance

Follow the instructions and Warnings noted in each appliance and equipment owner's manuals.

Air Conditioner

The roof A/C used on Airstream Touring Coach's are one of the most popular on the market today. In your owner's packet is a set of literature covering all operating and maintenance instructions. If the literature is misplaced, contact the A/C manufacturer or your Airstream dealer for replacement.

Proper voltage to the A/C is critical. A volt meter check may find voltage much lower at a campground shoreline outlet than the needed 110 to 120 volts. Your A/C may not function if the voltage is too low. Low voltage is usually associated with older or poorly maintained motorhome parks. Parking your touring coach so the power cord can be plugged in to a receptacle close to the fuse or circuit breaker box can alleviate low voltage problems. Avoid extension cords and adapters whenever possible. If an extension cord must be used, it should be rated at 30 amps and as short as possible to provide the most current.

If high temperatures are expected, make an effort to park in a shaded area. Starting the A/C early in the morning also helps. It is more efficient to hold a comfortable temperature than it is to lower the temperature after the interior of the touring coach is already hot.

NOTE

Review the air conditioning literature supplied in your owner's packet before proceeding.

Cooktop

You airstream has a single burning induction cooktop There is little difference between the operation of a home electric range and the touring coach's cooktop. Operating confidence can be quickly gained by reading the manufacturer's directions provided in the owner's packet.

WARNING

An operation manual for the range has been provided with your owner's packet. If this has not been provided, contact the listed manufacturer to obtain. Their manual contains specialized warnings and cautions that should be reviewed prior to operating the appliance.

Ceiling Vent Fan

The high-volume roof vent system is designed to quickly exhaust stale, hot air and draw in fresh air. It is great to use when the outside temperature does not call for air conditioning, but heat has built up in your touring coach. The core of the system is a powerful rotary fan that works with a slightly open window to create a balanced airflow. It is designed for maximum air exchange, minimum sound levels and power consumption. Fresh, clean, natural air is pulled in. Hot, stale, stuffy air is pushed out.

The controls for the roof vent have been incorporated into the Multiplex System. The vent lid can be opened or closed by pressing the UP/DOWN arrow buttons on any of the multiplex touch screen control panels located in the front or rear of the touring coach. Select the desired fan speed of either; low, medium, or high.

NOTE

Never place Lindeen™ or a like cover over ceiling fan. Greatly restricted airflow and increased sound levels will occur.

Thermostat and Rain Sensor

The fan is equipped with a built-in thermostat. Set the fan to auto and select your comfort setting on the multiplex control panel and the fan will automatically turn on and off as your touring coach heats up and cools down. When the rain sensor becomes wet the dome will close automatically and shut the fan off. Once the sensor has dried out the dome will reopen and the fan will restart.

NOTE

The vent can be put into auto mode only when HVAC is set to off. In auto the vents will only shut off and close when the temperature is 2° below the set point. Setting the climate control to anything other than off will bring the vent fan out of auto mode.

NOTE

Fan motor will not start if temperature selected is warmer than interior temperature of the coach.

Cleaning Instructions

1. Turn fan motor off.
2. Remove screws around perimeter of screen insert only.
3. Clean screen with soap and water solution, dab dry with a soft cloth, and reinstall.

CAUTION

This product has been manufactured using prime UV stabilized Polymers for maximum toughness and durability. However, the use of non-compatible chemicals will cause cracking and product failure. Please refer to the user's manual provided in your owner's packet for more information.

If your vent fails to operate properly under normal conditions, please contact the manufacturer. Please have the touring coach retail sales date and the vent Serial Number readily available when you call. Refer to your operating guide for contact information.

Exhaust Vent

Operation

The bath exhaust vent (shown above) removes moisture from the air when using the shower. To operate, you first need to open the vent.

To open the vent, push the button on the handle to disengage the clip and slide the handle upward until the clip engages. Once open, turn the fan on by pressing the ON/OFF button.

Turn the fan off before closing the vent.

To close the vent, push the button on the handle to disengage the clip and pull the handle down until the clip engages in the lowered position.

CAUTION

Turn off the fan before closing the vent. Damage to the motor can occur if the fan runs with the vent closed.

Cleaning Instructions

To clean the screen, make sure the fan is off. Remove the four (4) screws. Clean with mild soap and water only.

CAUTION

Do not operate the fan with the screen removed as this could result in damage or injury.

Fuse

To change the 5 Amp fuse:

1. Make sure the fan is off.
2. Remove the cap by turning it to the left to gain access.
3. Replace with a type GMA 5A fast-acting fuse.
4. Replace the cap to secure the fuse in the holder.

CAUTION

Turn off the fan prior to closing the vent. Damage to the motor can occur if the fan is ran with the vent closed.

Hydronic Heating and Hot Water System

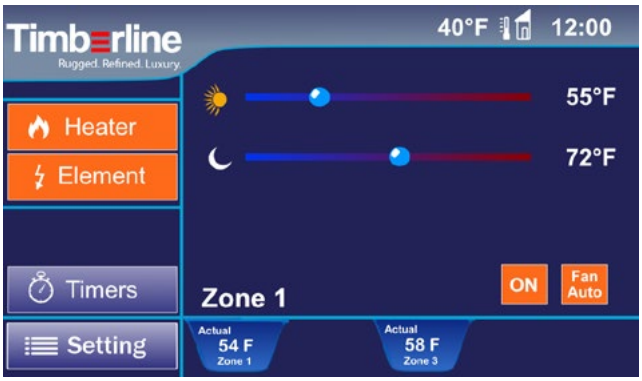

Your Touring Coach has a diesel/electric hydronic heating and on-demand hot water system that runs on diesel fuel and an electric element, eliminating the need for LP gas. The system gets its fuel from the vehicle's diesel fuel tank.

NOTE

The system will automatically shut OFF if the Coach's fuel tank reaches the one-quarter level, leaving enough fuel to travel to a refilling station.

The heater portion of the system operates by circulating a heat transfer fluid (RV boiler antifreeze) through quiet air handlers that provide soft, radiant heat to warm the Coach's interior. When the Coach is cold, the fans run on high until the interior temperature reaches its target. The fans then automatically slow down to maintain comfort levels.

The water heater portion of the system circulates the same fluid through an instantaneous water heat exchanger, which produces hot water for showers and kitchen use.

The Timberline touchscreen display (shown above) controls the system. When making selections, the display's various touch controls change from blue **OFF** to orange **ON**.

The controls allow you to adjust the heat and whether you want to utilize diesel fuel and/or electric:

- The **HEATER** icon controls the diesel fuel burner
- The **ELEMENT** icon controls the 1500W electric element that only functions when connected to shoreline power

See your Owner's Packet for a copy of the Timberline User Manual, where you will find detailed operation, maintenance, and troubleshooting instructions. Or, visit Timberline's website: https://timberlineheat.com

Heater and Water Heater Operation - Shore Power

When both the HEATER and ELEMENT icons are selected, the system automatically prioritizes using heat from the electric element. If there is greater heating demand on the system, the diesel burner will automatically engage and heat the antifreeze for circulation.

The diesel HEATER should only be operated when the vehicle is outside.

1. Select ELEMENT to activate the electric heating element (conserves fuel while connected to shoreline); and/or:
2. Select HEATER (prioritizes electric element and allows the system to engage the diesel powered heater based on demand).
3. Select ZONE 1 [FRONT] or ZONE 3 [REAR] using the tabs at the bottom of the screen.
4. Select the ON/OFF icon to turn the heat on or off for the selected zone.
5. Use the sliders to adjust the system to your desired temperature for each zone. The top slider adjusts daytime temperatures. The lower slider sets nighttime temperatures. Times for day and night can be adjusted in the settings menu.

Water Heater Only Operation - Shore Power

1. Select ELEMENT to activate the electric heating element (conserves fuel while connected to shoreline); and/or:
2. Select HEATER (prioritizes electric element and allows the system to engage the diesel powered heater based on demand).

Heater and Water Heater Operation - Boondocking

The diesel HEATER should only be operated when the vehicle is outside.

1. Select HEATER.
2. Select ZONE 1 [FRONT] or ZONE 3 [REAR] using the tabs at the bottom of the screen.
3. Select the ON/OFF icon to turn the heat on or off for the selected zone.
4. Use the sliders to adjust the system to your desired temperature for each zone. The top slider adjusts daytime temperatures. The lower slider sets nighttime temperatures. Times for day and night can be adjusted in the settings menu.

Water Heater Only Operation - Boondocking

1. Select HEATER to turn on the water heater.

NOTE

When boondocking, the Element icon will change color when selected, but will not function unless connected to shoreline power.

Storage Mode

You can place the system in storage mode for short-term storage between trips. For information on how to use storage mode, see the Timberline User Manual provided in your Owner's Packet.

Safe Operation

DO NOT run the hydronic heating/hot water system in an enclosed building or a partly enclosed area such as a garage where exhaust fumes can accumulate and create unsafe conditions.

For information on the safe operation of this system read the Timberline User Manual provided in your owner packet, and also, see Diesel Operated Systems on page 2-2 and see Diesel Exhaust on page 2-7.

Maintenance

The Hydronic Heating and Hot Water System requires periodic maintenance. For information about maintaining this system read the Timberline User Manual provided in your owner packet, and also, see Maintenance Schedule on page 9-2.

WARNING

DO NOT run the hydronic heating/hot water system in an enclosed building or a partly enclosed area such as a garage where exhaust fumes can accumulate and create unsafe conditions.

WARNING

Carefully read all the manufacturer's instructions prior to operating. NEVER store flammable material in close proximity to the exhaust outlet on the side of the touring coach. Hot exhaust system components can cause burns if touched, even briefly.

Microwave Ovens

Refer to the Certified Performance Checkout sheet, included in your owner's packet, for manufacturer, model, and serial number information.

Refrigerator

Review all refrigerator literature supplied in your owner's packet or stored in the refrigerator prior to operating it.

Operation

The refrigerator operates on 12 volt current coming from the converter. All units are supplied with a wide range thermostat designed to sense the evaporator (cold plate) temperature. The coldest position on the thermostat is reached by turning the knob to the right (clockwise); conversely turning the thermostat knob to the left (counterclockwise) yields a warmer setting. The OFF position is reached by turning hard counterclockwise past the click. The reference point is shown with an indicator sticker beside the knob.

Start up

Turn the power on and set the thermostat between 3 and 4. You can make further adjustments to suit your personal requirements after the box has cooled down. Allow the refrigerator to come down to temperature before loading with product. Adding pre-cooled product will help keep the temperature stable when loading. Setting the thermostat to a higher setting e.g., 7, will not decrease the time required for the unit to cool down to its normal operating temperature.

NOTE

The refrigerator requires 12V power to operate. You must have the Battery Power pushbutton (battery disconnect switch) in the ON position even if plugged into shore power.

Defrost and Cleaning

The frequency of defrost is dependent on the number of door openings, the ambient temperature and the humidity level. Typically, it is a good practice to defrost once there is ¼ inch of frost buildup on either side of the evaporator (cold plate). When defrosting, the unit is shut off by turning the thermostat counterclockwise to the OFF (0) position. Prop the door open. We suggest placing a towel in the bottom of the refrigerator to catch excess moisture.

Now that the unit has been defrosted, the interior can be cleaned with a non-abrasive cleaner. Do not use "Brillo" or "SOS" type abrasive pads, as they will score the surfaces. Baking soda is recommended.

CAUTION

Speeding up the defrost process with a knife or scraper is strongly discouraged due to the likelihood of rupturing the refrigerant circuit.

NOTES

AIRSTREAM®

Section 6
EXTERIOR

EXTERIOR CARE 6-2
WAXES AND POLISHES 6-2
HOW TO CARE FOR YOUR TOURING COACH FINISH. 6-2
Washing Your Touring Coach 6-3
Body Kit. 6-3
Windows 6-3
ROADSIDE EXTERIOR COMPONENTS (GL) . . 6-4
CURBSIDE EXTERIOR COMPONENTS (GL) . . 6-5
ROADSIDE EXTERIOR COMPONENTS (GT) . . 6-6
CURBSIDE EXTERIOR COMPONENTS (GT) . . 6-7
EXTERIOR FEATURES 6-8
Alcoa Dura Bright Rims. 6-8
Cleaning Instructions 6-8
Water Management Panel 6-8
City Water Hookup 6-8
Fresh Water Tank Fill 6-8
Exterior Shower 6-9
Exterior Sliding Step 6-9
Lock Extended Switch 6-9
Shoreline Power Inlet and Cordset 6-9
SmartPlug Inlet 6-9
SmartPlug Cordset 6-10
120-Volt Outlet and TV/Satellite Inlet 6-10
Solar Ports 6-10
Hydraulic Leveling System 6-10
Leveling 6-10
HITCH COVER 6-11
How To Remove The Hitch Cover. 6-11
Before Removal 6-11
After Removal. 6-11
AWNING 6-11
Awning Use In Wind and Rain 6-12
Awning Manual Override 6-12
Care and Maintenance 6-12
SCREEN DOORS 6-13
Screen Door (GL) 6-13
Screen Door (GT) 6-13
Powered Rear Screen 6-13

Exterior Care

The exterior of your Airstream Interstate Touring Coach, except for the body kit, has been painted by Sprinter. The care of the paint is detailed in the Sprinter manual. The following additional information is provided by Airstream to help you understand the finish and its care. Following these instructions will provide a long lasting, high-gloss finish for your recreational vehicle. These same procedures can also be applied to your everyday automobile, producing the same long-lasting results.

NOTE

Information on finish care may provide additional information and tips on the use of the Sprinter Van as a touring coach, however, no information about the exterior finish of your touring coach in this manual should be interpreted as advice or directions to disregard or void the warnings, cautions, or other information contained in the Sprinter's manuals.

Waxes and Polishes

Over 90 percent of all automotive finishes are clear coat. The finish on your touring coach is a state-of-the-art Acrylic Urethane Basecoat/ClearCoat. This means you will wash and polish a clear urethane coating designed to protect the basecoat: the pigmented coating that provides color. As its main function is protecting the basecoat, the clearcoat needs to be maintained especially in harsh environments. Clearcoats do not fade themselves, but appear to fade or lose gloss as the surface becomes contaminated by the environment. If this contamination is not removed frequently, the result will be a dull or low-gloss finish. Occasional washing alone will not adequately remove some forms of contamination and polishing will be required.

Polishes and waxes primarily serve the following purposes:

1. To remove minor surface imperfections caused by water spots and acid rain
2. To remove minor scratches by filling them and leveling the surface
3. To beautify the paint finish appearances with more depth and high-gloss
4. To protect the paint finish from the elements

Do not use products that contain harsh abrasives such as rubbing or polishing compounds. These products should be used by experienced technicians with the proper training and equipment. Most polishes and waxes are designed to clean and polish in one application.

A hand-applied polish or wax will offer outstanding performance and protect the touring coach finish. When applying polish or wax, do so in a shaded area making sure the surface is at the specified temperature according to the polish manufacturer's recommendations. Due to the variations of polishes and waxes, incorporate the following suggestions into the polishing technique:

1. Condition the polishing pad by rubbing a slight amount of polish on it.
2. Use only the amount of polish specified in the label directions.
3. Work a small area at a time.
4. Rinse off and remove dried polish from crevices, trim, and moldings.
5. Follow the products manufacturer's directions.

How to Care for Your Touring Coach Finish

Keeping your touring coach looking its best at all times involves keeping the paint finish clean and in good condition. This means periodic washing and polishing, as well as getting the paint finish repaired as soon as possible when the paint is damaged or affected in any way. The purpose of the paint finish is twofold:

- Provide an aesthetically pleasing appearance.
- Protect the vehicle from the environment.

Your touring coach is exposed to many environmental conditions that have an adverse effect on the paint finish:

1. Road salts and sodium chloride
2. Road tar/bugs
3. Bird droppings/tree sap
4. Industrial fallout/acid rain/pollution
5. Ultraviolet exposure and moisture

The most common problems resulting from these conditions are corrosion, staining, and chemical spotting. These problems can be minimized through regularly-scheduled washing and polishing.

Washing Your Touring Coach

Make sure the touring coach's surface temperature is not too hot, under 90°F, and not in direct sunlight. A shady area is ideal for washing your vehicle, as direct sunlight causes water and soap to evaporate too fast, resulting in water spotting. Use a mild soap or detergent.

Most auto care stores carry a car wash shampoo. Try to avoid combination wash-n-wax products as these waxes cause buildup and are designed for smaller surfaces. Have two dedicated sponges or wax mitts: one for the paint finish and one for the wheels and under carriage. Brushes or wash mitts that have plastic bristles are acceptable for use on tires and wheel wells, but are not intended for use on the paint finish. Avoid using such items on painted surfaces, as they will damage the touring coach paint and finish.

Wash the wheels and wheel wells first as this prevents splattering on already clean panels. Wash from the top and work your way down, frequently rinsing to minimize grit abrasion. Follow with a final rinse of water. This process will remove most contamination from the touring coach's surface. For stubborn stains such as road tar, use an ammonia-based glass cleaner or a small amount of rubbing alcohol on a damp cloth. This may not dissolve the road tar, but will loosen tar and bug stains and remove them from the surface. Do not use solvent-based cleaners on bird droppings or tree sap as these are water-based stains and will eventually dissolve using an ammonia-based glass cleaner, warm soapy water and a little "elbow grease." Once again, after removing stubborn stains immediately rinse with clean water.

Drying the touring coach is just as important as washing your vehicle as today's tap water and well water contain many chemicals that could water stain your touring coach's finish. We suggest using a damp natural or synthetic chamois, however, there are other drying products such as lint free micro-fiber towels that work just as well.

Follow the simple cautionary measures, and your new finish will give you maximum gloss and durability.

It is recommended that the caulking and sealant used in external seams and joints such as window frames, light bezels, beltline, and rub-rail molding, etc., be checked regularly. If this material has dried out and becomes cracked or checked, or if a portion has fallen out, it should be replaced with fresh material to prevent possible rain leaks. Caulking and sealing material is available from your touring coach dealer and most RV supply stores.

Body Kit

The body kit provided by Airstream is made from state-of-the-art high impact plastic. The same material is used in the automotive industry for moldings, bumper guards, and trim. The kit is made to color specifications and requires no paint or finish. The cleaning procedures are the same as the painted finish on the Sprinter body; however, there are several automotive plastic care products on the market for exterior parts that will provide added protection from UV ray damage, dirt, and stains. Find one you like and use it as often as needed to help prevent fading.

Windows

Clean your touring coach windows the same way you clean the windows in your home. Clean the seals with a damp cloth and mild detergent every 3 to 6 months. Do not use strong solvents, as they will damage the seals. A coat of natural silicone lubricant applied after the seal has dried will keep it flexible. Spread the lubricant evenly with a brush or finger, working it into the surface. This is a good practice for all rubber seals in your touring coach.

WARNING

Failure to properly clean and lubricate the window seals could result in the window sticking to the jamb and should only be released by a qualified technician trained in the procedure. Do not force, pry, or apply great pressure to open the window.

For replacement of a damaged window, contact an Airstream Service Center.

Roadside Exterior Components (GL)

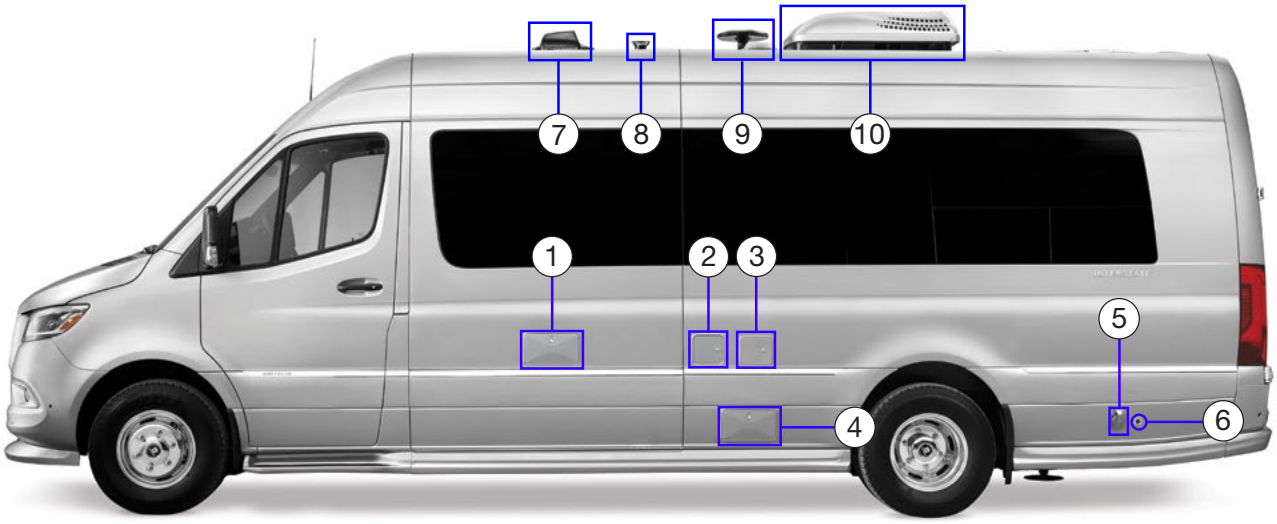

NOTE

Sections 6 and 9 contain additional information about these components. Mid-production changes may affect the exact location of the features shown above.

1. Water Management Panel: Use to fill fresh water, dry camp, hook up to city water, and winterize/sanitize.
2. Exterior shower outlet can be used on the water pump or with the city water hookup after faucet/valve/hose assembly is inserted.
3. Utility Hatch: contains the switches for the dump valves, macerator pump, and macerator pump high-pressure hose reel, and Cable/Satellite TV inlet. A portable satellite dish can be connected and used in this cable connection.
4. Macerator hose reel compartment stores the electric reel holding the pump hose and the Black Tank Flush.
5. SmartPlug Power Cord Inlet: the 30 amp power cord is stored inside the vehicle and is used to provide external AC power to the touring coach.
6. Solar Port: designed as a quick plug-in for a portable solar charging kit.
7. Connected RV pre-wired antenna. Provides access to the internet by creating a local area network. Router required (sold separately).
8. Plumbing vent.
9. Power boosted omni-directional TV antenna is wired into TV outlets on exterior of coach and inside unit at entertainment center cabinet.
10. Rooftop air conditioner.

Curbside Exterior Components (GL)

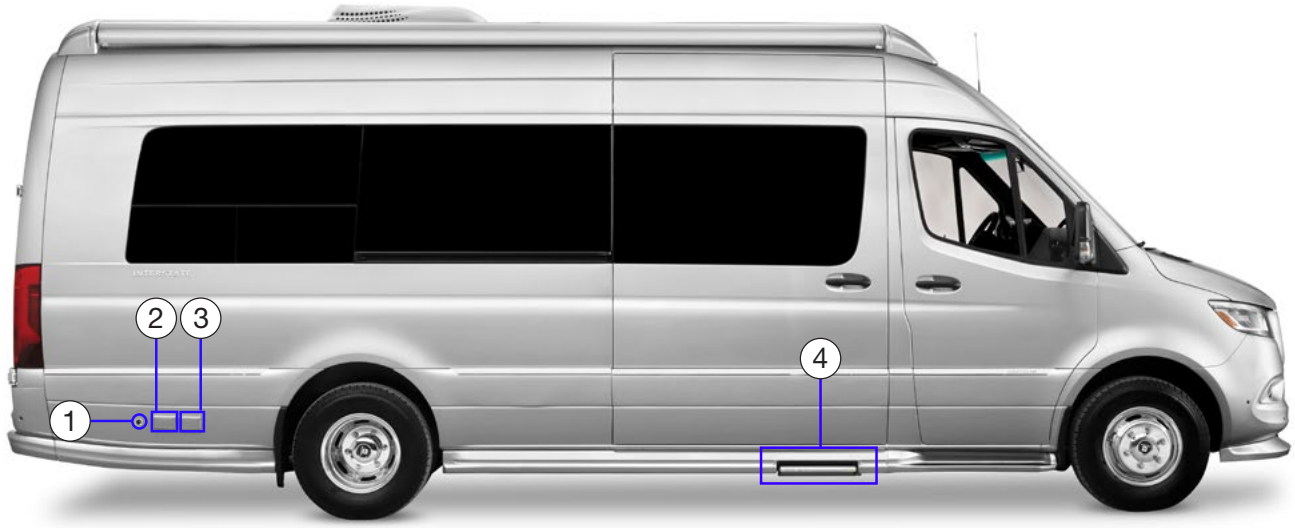

NOTE

Sections 6 and 9 contain additional information about these components. Mid-production changes may affect the exact location of the features shown above.

1. Solar Port: designed as a quick plug-in for a portable solar charging kit.
2. Exterior 120-volt outlet provides an exterior GFCI protected electrical source when plugged into shore power.
3. TV outlet provides reception for an exterior television. It is pre-wired and integrated into the Cable TV/Satellite TV system.
4. Sliding step with auto retract has a step out warning buzzer and a lock extended switch for easy entry into the touring coach.

Roadside Exterior Components (GT)

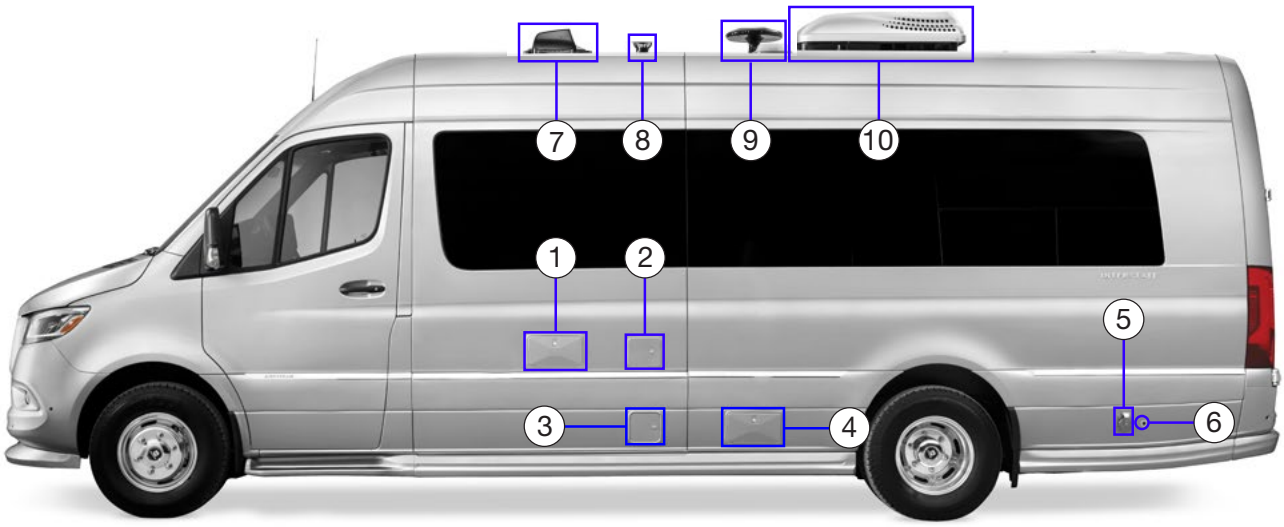

NOTE

Sections 6 and 9 contain additional information about these components. Mid-production changes may affect the exact location of the features shown above.

1. Water Management Panel: Use to fill fresh water, dry camp, hook up to city water, and winterize/sanitize.
2. Utility Hatch: contains the switches for the dump valves, macerator pump, and macerator pump high-pressure hose reel, and Cable/Satellite TV inlet. A portable satellite dish can be connected and used in this cable connection.
3. Exterior shower outlet can be used on the water pump or with the city water hookup after faucet/valve/hose assembly is inserted.
4. Macerator hose reel compartment stores the electric reel holding the pump hose and the Black Tank Flush.
5. SmartPlug Power Cord Inlet: the 30 amp power cord is stored inside the vehicle and is used to provide external AC power to the touring coach.
6. Solar Port: designed as a quick plug-in for a portable solar charging kit.
7. Connected RV pre-wired antenna. Provides access to the internet by creating a local area network. Router required (sold separately).
8. Plumbing vent.
9. Power boosted omni-directional TV antenna is wired into TV outlets on exterior of coach and inside unit at entertainment center cabinet.
10. Rooftop air conditioner.

Curbside Exterior Components (GT)

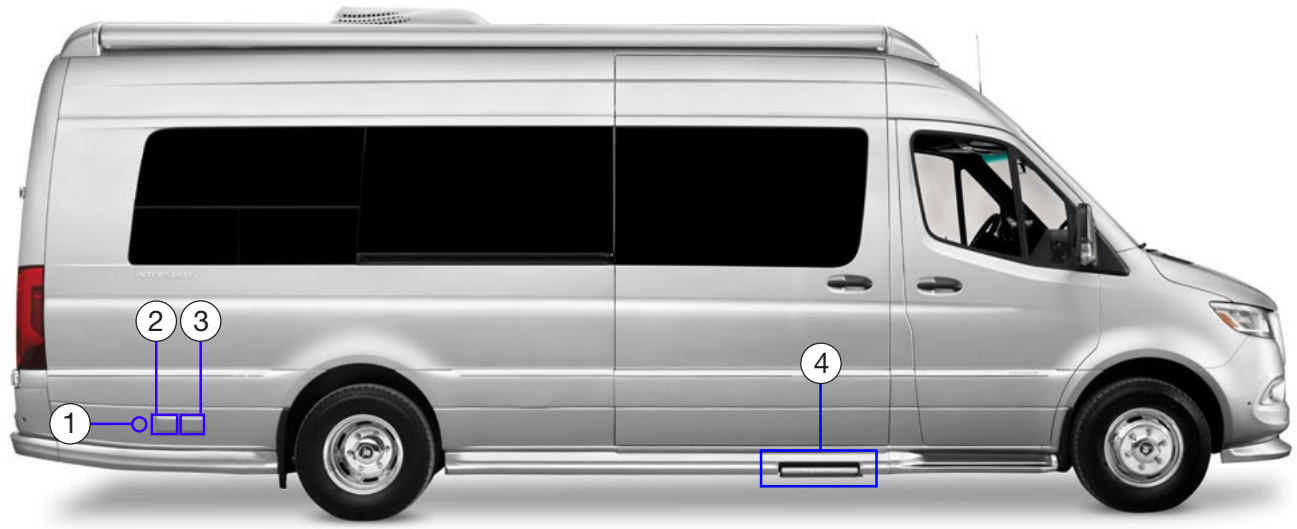

NOTE

Sections 6 and 9 contain additional information about these components. Mid-production changes may affect the exact location of the features shown above.

1. Solar Port: designed as a quick plug-in for a portable solar charging kit.
2. Exterior 120-volt outlet provides an exterior GFCI protected electrical source when plugged into shore power.
3. TV outlet provides reception for an exterior television. It is pre-wired and integrated into the Cable TV/Satellite TV system.
4. Sliding step with auto retract has a step out warning buzzer and a lock extended switch for easy entry into the touring coach.

Exterior Features

Alcoa Dura Bright Rims

Cleaning Instructions

These rims require no chemicals to clean them. Simply use a mild soap, water, clean towel, and rinse. Follow these steps for an easy clean and shine.

1. Rinse the wheel prior to washing with a brush. This will prevent scratching.
2. Mix a mild detergent and water. Any car wash or household detergent will work.
3. Using a soft clean brush and soap solution, clean the rims. (Do not use any abrasive-type brushes or pads.)
4. After cleaning the surface, rinse thoroughly to remove all soap so it will not spot. Towel drying will help this as well.

CAUTION

When using a power washer, maintain a proper distance from the touring coach. The proper distance is approximately 2.2 ft. when using a round jet nozzle, and 1 ft. when using a 25 degree flat spray jet nozzle. Never point the jet nozzle at moldings, hoses, electrical components, seals, plug connections, etc. Never use round jet nozzles on tires, the pulsating water can damage the sub-structure of tires.

Water Management Panel

The Water Management Panel located on the roadside of the coach is multipurpose. It features a low lead brass inlet valve with four selections:

1. Tank Fill - select this setting to fill the fresh water tank from a pressurized city water source.
2. Dry Camping (boondocking) - select this setting to run fixtures from the fresh water holding tank.
3. City Fixtures (city water hookup) - select this setting to run fixtures from a pressurized city water source. This setting can also be used when connecting compressed air for winterization; see Winterizing and Storage on page 9-10.

WARNING

Use the City Fixtures setting for compressed air winterization. Do NOT exceed MAX 50 PSI when using compressed air to clear the system of water during winterization. The 100 PSI MAX label on the water management panel only refers to the valve's maximum pressure.

4. Sanitize/Winterize - select this setting to use the water pump to draw sanitization solution or RV antifreeze from an unpressurized container into the water system when sanitizing or winterizing; see Sanitizing the Fresh Water System on page 9-7 and also see Winterizing and Storage on page 9-10. NOT for use with compressed air. See 3 above.

City Water Hookup

Connect to a city water supply using a 1/2 inch diameter tasteless, odorless, non-toxic, high-pressure hose with a standard garden hose thread designed for RV use. Turn on the city water supply and slowly open a faucet. There will be sputtering at the fixture until all the air is expelled, which may take some time. Once you have a steady flow at one faucet, open others to expel the remaining air.

Fresh Water Tank Fill

Fill the fresh water tank using the same hose used above. A small vent next to the inlet allows air to expel from the tank when filling.

It's a good idea to let the water run through the hose for a short time to flush it out. Some users will fill their tank with water from home to avoid distasteful water from another location. Keep in mind the more water carried in the fresh water tank, the less cargo carrying capacity you have for other items.

CAUTION

Only use a tasteless, odorless, non-toxic hose designed to prevent bacteria growth to fill the fresh water tank

Exterior Shower

All units are equipped with an exterior shower. This shower consists of a shower hose, shower head, and water valves inside a lockable exterior door. Water is supplied by the pump or city water hookup. To use: insert the hose into the inlet, pull back slightly to verify it is securely connected. Press the spout button and rotate the faucet handles to the desired temperature. To remove the hose assembly, hold back the water inlet fitting while simultaneously pulling out on the hose fitting. Be sure to press the spout button to relieve any residual pressure before removing the hose.

Exterior Sliding Step

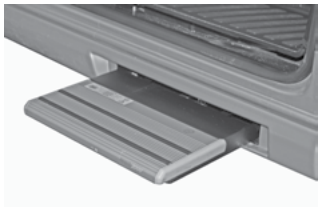

The curbside sliding door has a sliding step with auto retract, step out warning buzzer, and a lock extended switch located on the multiplex panel just inside the sliding door. Please read, understand, and instruct passengers of the following operational and safety information pertaining to the step.

The step extends and retracts as the sliding door is opened and closed with the engine off and step lock extend switch off. The step retracts automatically and will not extend when the engine is started to prevent damage while in transit.

If the step does not retract fully, a warning buzzer will sound. The vehicle should not be driven if the step fails to retract completely. This buzzer is controlled by a 10-amp fuse.

An undercarriage light, extending from wheel to wheel, has been added for your convenience. This step light can be turned on/off or dimmed using the multiplex panel, located just inside the sliding door, labeled “under coach”.

Lock Extended Switch

To use the lock extended switch, turn the engine off, open the door to extend the step, and turn the switch on. The step will now remain extended while opening and closing the door. Turn the switch off to return the step to normal operating mode.

If you forget to turn the lock extended switch off before starting the engine, the step will retract when the engine is started; however, it will not extend when the engine is turned off and the door is opened. To reset the step, turn the engine off and the step lock extended switch off with the door closed.

WARNING

LOOK BEFORE YOU LEAP. The step will not extend with the opening of the sliding door when the engine is running. Check that the step is extended before leaving and entering vehicle. Failure to follow this warning could result in person injury.

Shoreline Power Inlet and Cordset

SmartPlug Inlet

Your Airstream is equipped with a SmartPlug power inlet located on the road side of the touring coach. A few features of the SmartPlug include:

- Eliminates Overheating - Increased pin & clip surface area greatly improves electrical conductivity during high amperage demand.
- Ease of Use - No twist required, the unique plug body shape and push-in design means it only goes in the right way every time - even in the dark!
- Multi-Point Locking System - Side clips lock the plug securely into the inlet which eliminates any stress on the pins from movement of the power cord.
- Weatherproof Seals - Multi-fin silicone gaskets installed in the inlet cover and interior of the plug body eliminates moisture penetration.

Many campgrounds provide less than 30 amp service and your hookup may blow their fuse or circuit breaker. If this happens, reduce the load and replace the fuse or reset the breaker.

SmartPlug Cordset

The cordset (power cord) provided with your touring coach has a Reverse Polarity Indicator System. Reverse Polarity occurs when unknowingly connecting a cordset to a power pedestal that has the positive and negative leads reversed internally. Reverse Polarity is a safety concern and can damage electrical components on a coach or trailer.

On top of the SmartPlug power cord connector is two LED Indicator Lights, one blue and one red. When the SmartPlug is connected to a power source the lights will illuminate to indicate the status of a safe or unsafe condition:

- Blue ON, Red OFF - Normal Power
- Blue ON, Red ON - L1 and neutral are swapped in a reverse polarity condition
- Blue OFF, Red ON - L1 and ground are swapped in a dangerous reverse polarity condition
- Blue OFF, Red OFF - No Power

120-Volt Outlet and TV/Satellite Inlet

An inlet for TV/Satellite and an outlet for a 120 volt receptacle is located on the curbside and is labeled for your convenience. The touring coach must be plugged into a shoreline power supply for the outlet to operate.

The TV/satellite inlet can be used to connect a campground cable source or portable satellite antenna for viewing inside the touring coach.

Solar Ports

In addition to the 300 watts of solar power dedicated to your house battery, your Airstream has two external ports that allow for the plug-and-play connection of additional solar panel arrays. There is a solar port on each side of the touring coach.

There are limitations when considering which aftermarket panels to purchase or how to build an external array:

- Ensure the aftermarket solar panels do NOT include a solar controller/regulator. The system already has a controller. Connecting a second portable controller will negatively affect the system
- The maximum total input for all solar power is 1200 watts, and the touring coach is already factory-equipped with 300 watts (4 amps at 75 volts) dedicated to the house battery. Therefore, the maximum input through the external ports is limited to 900 watts.

To achieve optimum results, the voltage of your external array should closely match the 75 volts of the existing rooftop array. If not, the circuit will dump and waste the lower voltage supply. Check the aftermarket solar panel manufacturer's information on the solar panels you intend to use.

Airstream recommends mimicking the factory-installed rooftop solar array using Merlin manufactured solar panels, wired in "series," when constructing your setup. Wiring the panels in "parallel" could potentially exceed the controller's rating.

WARNING

Portable solar panels/arrays must not exceed 20-amps or the 100-volt rating of the solar controller.

Hydraulic Leveling System

The Airstream Touring Coach can be equipped with the optional electrically/hydraulically driven leveling system. The hydraulic pump is powered by a 12 volt direct current motor, which pumps hydraulic oil through the hydraulic hoses to four leveling jacks. The leveling system can be operated by the control panel on the passenger's seat pedestal under the skirting. The control panel can also be removed and used remotely within 10 feet of the touring coach. The four leveling jacks are mounted directly to the touring coach's chassis and are pre-set to the required leveling capacity.

Leveling

Before starting the leveling procedure you must follow these guidelines:

1. Park on a surface that is as level as possible.
2. The parking brake must be engaged.
3. The transmission must be in Park.
4. The vehicles ignition must be ON.

To start the automatic leveling process press the "ON/OFF" button, located on the control panel, to switch the system ON. Press the "Automatic Mode" button to begin the leveling procedure. Once the leveling process is complete press the "ON/OFF" button again to turn the leveling system OFF. The jacks can be retracted by turning ON the system and pressing the

"Retract All Jacks" button once. Make sure to turn OFF the leveling system once the jacks are in their stowed position.

For more information on the hydraulic leveling system, or how to manually level the touring coach, please refer to the user manual provided.

WARNING

This product is exclusively developed as a leveling system and may not be used for work under the vehicle, such as changing tires and maintenance.

WARNING

All jacks will retract when the parking brake is released or the ignition is turned on.

NOTE

Depending on the terrain, the automatic leveling process takes about one minute during which all persons should refrain from entering the vehicle.

Hitch Cover

How To Remove The Hitch Cover

Before Removal

After Removal

1. Kneel down behind the rear bumper. There are two black wing nuts on each corner of the cover shown below.

2. Rotate each wing nut 1/4 turn, pull down and remove.

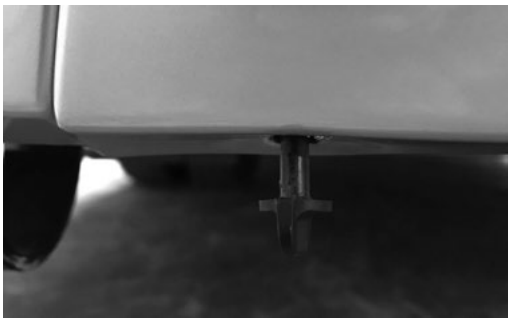

3. Pull straight down to remove cover. Once removed you can store this in one of the rear storage compartments. Reverse these instructions to reinstall. The 7-way Plug is just behind the hitch cover.

Awning

The awning manufacturer provides a complete Owner/Operator Manual for the awning located in your owner's packet. The multiplex panel just inside the sliding door or the main touch screen panel controls the awnings extend/retract feature as well as the awning lights.

WARNING

Awning must be retracted before driving the Touring Coach. Damage may occur if the awning is not properly retracted. The awning will not extend while vehicles engine is running.

CAUTION

Rear doors must be closed when operating the awning or if the vehicle is left unattended, due to seismic sensor, with the awning extended. Damage may occur if the awning is extended or retracted with the rear doors open.

Awning Use In Wind and Rain

The automatic extra strong awning comes with a Direct Response™ System seismic sensor. The Direct Response™ System is an innovative seismic sensor system that automatically activates the 12V motor and retracts the awning in strong winds, thus avoiding possible damage to the awning.

NOTE

If wind or extended periods of rain are expected, retract the awning and secure as for travel. The effects of wind and rain on any awning are unpredictable. Severe damage to the vehicle and or the awning may result and cannot be covered by warranty.

CAUTION

Never use the awning with damaged fabric. Make sure the awning can be correctly retracted.

Awning Manual Override

If power to the vehicle is not available, the awning can be safely retracted using the manual override located on the idler (right) end of the case. A ratchet and socket extension has been included and is located under the passenger side floor compartment.

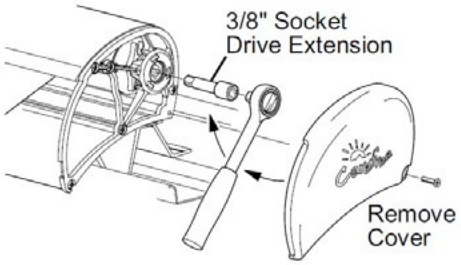

1. Remove thumb screw from backside of decorative awning cap. The cap will be held in place by velcro that must be released before removing.
2. Remove cover from the right end of awning and save.
3. Insert the 3/8” socket drive extension and handle into the square drive hole inside the end cap.
4. Turn the handle clockwise until the awning is retracted.
5. Replace the end cap.

CAUTION

After closing the awning with the manual override, the lead rail may move out from the case 1/4”-1/2”. This is normal and the awning is secure for travel until power is restored or repairs are completed. Do NOT attempt to force the lead rail in with the override, serious damage can occur to the awning.

NOTE

Manual override cannot be used to extend the awning.

Care and Maintenance

1. PERIODIC MAINTENANCE Like any other part of the touring coach, an owner should periodically inspect the awning. The following items should be checked.
   a. All mounting brackets are tight.
   b. Check all pivot points for enlargements of holes or broken rivets.
   c. Check end caps for cracking and splitting.
   d. Check that awning rail is tight against coach and all screws are tight.
   e. Check canopy for loose stitching and possible shrinkage or puckering.
   f. Clean and lubricate all tension knobs and pivot points.

Fuse Location: Chassis fuse panel under driver’s seat,

Screen Doors

The touring coach is equipped with an accordion style screen door to provide ventilation and insect control. To operate, carefully pull the screen from its stowed position across the opening. Reverse the procedure when returning the screen door to its stowed position. The screen door should always be in the stowed position when operating the main sliding door, to prevent damage.

Screen Door (GL)

Screen Door (GT)

On GT models, the screen above the galley can be opened as well, by sliding the screen up. This screen can be used to pass food, drinks, or other items outside. It can also be used to access the galley's faucet without the need to enter the touring coach.

CAUTION

Check that the screen door is open before closing the exterior door. Failure to follow this caution could result in damage to the screen door.

Powered Rear Screen

To lower the rear power screen, press the down button on the multiplex control panel once. To stop the power screen in the position that you want, press the button again or allow the screen to stop automatically when it reaches its set limit. To raise the power screen back up press the up button on the multiplex control panel.

NOTES

AIRSTREAM®

Section 7
SPRINTER VAN

IMPORTANT SPRINTER INFORMATION 7-2
Fuel 7-2
COMPONENT IDENTIFICATION 7-2
Sprinter Van Serviced by Mercedes-Benz Sprinter or Its Suppliers 7-2
Chassis 7-2
Drivers and Passengers Seats and Restraint Systems 7-2
Airstream Components Serviced by Airstream Authorized Service Centers or Airstream suppliers. 7-2
Cab Area. 7-2
Living Quarters 7-3
Electrical Components 7-3
Exterior 7-3
TIRES 7-3
Vehicle Placard and Tire Inflation Pressure Label 7-3
Proper Tire Inflation 7-3
Under Inflation 7-4
How Overloading Affects Your Tires 7-4
Tires and Wheels 7-4
Tire Grip 7-4
Hydroplaning. 7-5
CHANGING A TIRE 7-5
Flat Tire. 7-5
Precautions When Changing a Wheel 7-6
Procedure 7-6
Jack 7-6
INSTALLING AND REMOVING A WHEEL 7-6
Mounting a New Wheel. 7-7
Centering Wheels With Wheel Nuts 7-7
Lowering the Vehicle. 7-7
Wheel Bolt Tightening 7-7
TIRE ROTATION 7-7
Rotation Pattern For Dual Rear Wheels . . . 7-8
Support 7-8
Correct 7-8
Incorrect 7-8
AIR RIDE SUSPENSION 7-9
Manual Adjustments 7-9

The Airstream Touring Coach is integrated into a Sprinter Van designed and manufactured by Mercedes-Benz. Operation of the Sprinter, its engine, power train, and other related components are discussed in the Mercedes-Benz Sprinter Owner's Manual and other literature provided by Sprinter. As a point of reference, those systems discussed in this literature are warranted by Mercedes-Benz or their suppliers.

Important Sprinter Information

Your Mercedes-Benz Sprinter Van Operator's and Warranty Manuals contain important Cautions, Warnings, operational, and warranty information on the Sprinter and its components. All information in the Sprinter manual should be reviewed and followed for your safety. The Airstream Owner's Manual may provide additional information and tips on the use of the Sprinter Van as a touring coach; however, no information in the Airstream manual should be interpreted as advice or directions to disregard or void the warnings, cautions, or other information contained in the Sprinter manuals. If you believe there is a conflict in information, Warnings, Cautions, or safety-related information between the Sprinter and Airstream manuals, please contact the Airstream customer relations department immediately to resolve the conflict.

Fuel

The Mercedes-Benz Sprinter Owner's Manual contains important fuel requirement information on using Ultra-Low Sulfur Diesel, Bio fuels, and very low temperature operation. Please read, understand, and follow this information.

Component Identification

If repairs are needed, it may be difficult to determine which parts are Mercedes-Benz and which are Airstream's responsibility. The following partial lists show the major components of the van and the company responsible for their servicing.

For assistance in locating a service center in the United States:

Customer Assistance Center

Three Mercedes Drive

Montvale, New Jersey 07645-0350

1-877-762-8267

See Mercedes-Benz Sprinter Warranty Information Manual for complete instructions.

Sprinter Van Serviced by Mercedes-Benz Sprinter or Its Suppliers

Chassis

Engine

Exterior automotive lights

Engine battery

Power mirrors

Engine cooling system

Fog lamps

Transmission

Chassis suspension

Brakes

Drive axle and hubs

Steering assembly, Steering wheel

Rear window defroster and heated windshield

Automotive fuse panel

Wheels, Tires

Parking brake

Alternator

Fuel pump

Speed control

Automotive electrical system

Instrument panel cluster

Hitch receiver and tow plug

Doors, cab, side and rear cargo

Heated drivers/passenger seats

Cab door windows and windshield

AM/FM radio antenna

Dash Multimedia Center

Dash AC/heater/defroster

Cargo door assist handle

Lane keeper assist

Blind spot assist

High beam assist

Collision prevention assist

Parktronics

Drivers and Passengers Seats and Restraint Systems

Sprinter provides the swivel pedestals and Airstream provides the seat decorative skirting and recovers the front seats to match the surrounding decor.

Airstream Components Serviced by Airstream Authorized Service Centers or Airstream suppliers.

Cab Area

Driver's and passenger's seat skirting and covers.

Floor Mats

Dash Kit

Rear View Mirror/Monitor

Vanity Mirrors

Living Quarters

Second row cab seats
Fire extinguisher
Interior furniture
Appliances in the lounge/ lavatory area.
Smoke/CO
Three piece sun and privacy shield
Window Coverings
Floor covering
All plumbing systems

Electrical Components

Volta Power System
Inverter/Charger
Converter
House battery
Battery Power Button
Power vents
Secondary Alternator
120-volt system
12-volt living area system
Multiplex System
Roof AC
TVs & antenna

Exterior

Alcoa Dura Bright Rims
Exterior body kit
Power step
Exterior lights
Awning
Windows
Air Ride System
Macerator pump
Solar panels
Leveling system

NOTE

Some features listed may not be available on your Interstate.

Tires

Under inflation or over inflation of tires is dangerous. Under inflation can result in tire flexing, heat build-up, tire overloading, bad handling, bad fuel economy, and uneven wear. Over inflation can result in abnormal wear, bad handling, and a harsh ride.

Tire inflation pressures should be checked as per the Mercedes-Benz Sprinter's Owner's manual and when significantly changing the load you plan to carry in your touring coach. Set the correct tire pressure before loading the vehicle. Always check tire inflation pressures when the tires are "cold." Front and rear pressures are shown for each model and GVWR, and are based on the GVWR and front and rear axle ratings (GAWRs) printed on your vehicle VIN plate and certification label. Tires must be inflated to these pressures when the vehicle is fully loaded or an axle GAWR is reached.

For tire size and inflation pressures, see Specifications on page 4-3

Proper front end alignment improves tire tread mileage. Your front-end suspension parts should be inspected periodically and aligned when needed. Improper alignment may or may not cause the vehicle to vibrate. However, improper toe alignment will cause front tires to roll at an angle, which will result in faster tire wear. Incorrect caster or camber alignment will cause your front tires to wear unevenly and can cause the vehicle to "pull" to the left or right.

Vehicle Placard and Tire Inflation Pressure Label

The TIRE AND LOADING INFORMATION placard supplies information on the size and the cold tire inflation pressure for the original equipment tires supplied with your vehicle. Check the Sprinter manual for all weights and tire information placard location.

A MOTORHOME TIRE SAFETY ADDENDUM is included with your Airstream owner's packet. Please take the time to read, understand, and follow the information contained in the booklet.

Proper Tire Inflation

The level of air in your tires affects your vehicle's overall performance. Not even the highest quality tire will perform well if it's not inflated properly. The correct pressure varies from vehicle to vehicle and depends in part upon driver preference. Each vehicle has a recommended inflation pressure, usually found on a placard. Check the Sprinter manual for all weights and tire information and the placard location.

Correct tire inflation is a key component in tire care. The recommended inflation pressures for your tires are indicated on the certification label or in your owner's manual. Since touring coach's can be loaded with many different configurations, the load on each tire will vary. For this reason, air pressure should be checked based on the load on each individual tire. Cold Inflation Pressure should be adjusted to handle the maximum

tire load, and all tires on the axle should carry the same inflation pressure. Cold tire inflation pressure is the tire pressure checked in the morning before you drive more than a few miles or before rising ambient temperatures or the sun's radiant heat affect it. Check your tire air pressure at least once a month, before each trip, and each morning you drive during a trip. Tire pressure should be checked cold, as tire pressure ratings have been designed with typical running heat/pressure build up in mind. Make sure the valves and caps are free of dirt and moisture.

Under Inflation

Under inflation brings a higher risk of susceptibility to damage due to road hazards, reduces tire casing durability, and causes a loss in fuel economy, plus uneven or irregular tire wear. Severe under inflation brings about an increased risk of tread separation, handling difficulties, and possibly tire failure, which is caused by overheating.

NOTE

It is a common practice for motorhome owners to lower tire pressure in their search for a smoother ride. This is not only dangerous, it is relatively ineffective, and the difference in ride quality is not significant. When minimum inflation pressure requirements are not met, tire durability and optimum operating conditions are compromised. Tire inflation pressure should always meet at least the minimum guidelines for vehicle weight.

- It may be necessary to inflate your tires at a truck stop or truck service center in order to achieve adequate air pressure for your coach's needs
- Only permanent air seal metal valve caps should be used.
- Be safe - if a tire has been run 20 percent under inflated, it must be dismounted and inspected by a trained professional. It should not be inflated without a full inspection or without using a safety cage. Use a calibrated gauge. If your tire is rated for higher inflation pressures, a special gauge designed for larger tires will be required.
- Don't bleed air from warm tires to reduce pressure buildup.
- Don't inflate tires to cold psi rating beyond rim specifications.

How Overloading Affects Your Tires

Tire pressure is what enables your touring coach tire to support loads. Overloading your tires can have serious consequences for passengers and your touring coach. Too much weight can cause stress on your touring coach's suspension system, brake failure, shock absorber damage, handling and steering problems, irregular tire wear and possible tire failure. Excessive loads or under inflation can lead to an excessive amount of heat and tire failure. If you discover that your tires cannot handle the load, lighten the weight of the load on your tires.

Tires and Wheels

(This section is partially excerpted from the Mercedes-Benz Sprinter Van Operator's Manual.)

Check tires regularly for even tread wear, tread depth (note legal requirements), and signs of external damage. Use only wheels and tires of the same size, make, and pattern.

Do not install tires that are not approved for the size and type of wheel installed on the vehicle itself. Only use those wheel sizes that were delivered to you by your authorized Mercedes-Benz Sprinter dealer.

Use only wheels and tires that have been tested and approved by the vehicle manufacturer.

Break in the tires at moderate speeds for a distance of about 65 miles.

WARNING

Always replace wheel nuts that are damaged or rusted. Never apply oil or grease to wheel nuts. Damaged wheel hub threads should be repaired immediately. Incorrect mounting bolts or improperly tightened mounting bolts can cause the wheel to come off. This could cause an accident. Make sure to use the correct mounting bolts. Check tightness of wheel nuts regularly and retighten if necessary.

Tire Grip

Tire grip is greatly reduced on a wet or icy road. Speed and driving style must therefore be adapted to suit road conditions. Below a tread depth of 1/8 in., tire grip begins to decrease rapidly on wet roads.

Hydroplaning

Depending on the depth of the water layer on the road, hydroplaning may occur, even at low speeds and with new tires. Reduce vehicle speed, avoid grooves in the road, and apply brakes cautiously in the rain.

The majority of flood-related deaths are caused by people attempting to drive through moving water. Driving into flood waters may be the most dangerous thing one might ever try. Considering the following:

- Most cars will float (and be swept away) in 18-24 inches of moving water. Trucks and SUVs have only 6-12 more inches of clearance. Creeks and rivers can rise very rapidly and the road bottom can also wash away, making the water much deeper than it appears.
- Once cars are swept downstream, they will often roll to one side or perhaps flip over entirely. The driver has a few seconds to escape the vehicle. Many drivers panic as soon as the vehicle submerges and are found later with their seat belt intact.

Changing A Tire

(Partially excerpted from the Mercedes-Benz Sprinter Van Operator's Manual)

After changing a wheel, the wheel nuts must be tightened once the vehicle has been driven for about 30 miles.

If new or repainted wheels are fitted, the wheel nuts must be retighten again after about 600 to 3000 miles. Do not use remolded tires.

WARNING

Fitting wheel sizes other than those supplied by Sprinter to the vehicle will change the Sprinter's handling characteristics and may lead to an accident resulting in severe personal injuries, death and property damage.

NOTE

Read the Sprinter manual for wheel torque and wheel tightening procedures.

WARNING

The Mercedes-Benz Sprinter Operator's Manual contains important cautions, warnings, specifications, and operational information on changing, maintaining, and replacing of the tires and wheels. Read, understand, and follow the Sprinter manual sections for changing a tire.

CAUTION

Changing a tire on a touring coach chassis is a physically demanding procedure. It requires specialized tools and knowledge of safety procedures. Only you can determine your knowledge base and physical ability. Don't take any unnecessary risks. Find a safe area to park your unit, and call a tire service center and supply them with the information in the Sprinter Manual if you have any doubts about changing a tire.

Flat Tire

If you get a flat tire while driving, gradually decrease your speed. Hold the steering wheel firmly and slowly move to a safe place on the side of the road. The pressure of the spare wheel (sold separately) should be checked regularly (at least after every tenth time at the filling station).

The vehicle tool kit is located in a hatch under the front passenger foot well.

WARNING

Use a jack (sold separately) designed exclusively for jacking up the vehicle at the jack take-up brackets built into either side of the vehicle. To help avoid personal injury, use a jack only to lift the vehicle during a wheel change. Never get beneath the vehicle while it is supported by a jack.

Precautions When Changing a Wheel

- Keep hands and feet away from the area under the lifted vehicle.
- Always firmly set parking brake and block wheels before raising vehicle with jack.
- Do not disengage parking brake while vehicle is raised.
- Always use the jack on a level surface.
- Do not jack the vehicle up more than 1-2 in. between the tire and the surface. Otherwise, the vehicle may tip over and may cause serious injury or death to you or others.
- Be sure that the jack arm is fully seated in the jack take-up bracket.
- Always lower the vehicle onto sufficient capacity jack stands before working under the vehicle.
- Do not damage, grease, or oil wheel nuts or stud threads.

Procedure

- Park the vehicle on a firm, level, non-slippery surface.
- Switch on the hazard warning flasher switch, apply the parking brake, and place the transmission selector in “P”.
- Everyone must leave the vehicle before you jack it up.
- Everyone must leave the danger zone before you jack up the vehicle. Danger zones vary with locations. Take a minute and look at what might happen if the vehicle falls off the jack and rolls. Set up your danger zone.
- The vehicle must be safeguarded in accordance with legal regulations (such as using a warning triangle).
- Prevent vehicle from rolling away by blocking wheels with wheel chocks (not supplied with vehicle) or sizable woodblocks or stone. On a level road place one chock in front of and one behind the wheel that is diagonally opposite to the wheel being changed. When changing a wheel on mild uphill or downhill grade, place chocks on the downhill side blocking both wheels of the other axle. Do not jack vehicle up on a steep grade.

WARNING

Do not change wheels on a steep uphill or downhill grade. The vehicle may begin to move and fall from the jack, which could cause property damage, personal injury, and/or death.

Jack

Read, understand, and follow the Mercedes-Benz Sprinter Operator’s manual instructions, cautions, and warnings for changing a wheel and jack point locations.

WARNING

A jack (sold separately) is intended only for raising the vehicle briefly, for instance when changing a wheel. The jack must be placed on a firm, flat surface only. Do not crawl under the vehicle while it is raised with a jack. Do not start the engine while the vehicle is jacked up. Do not jack the vehicle up more than 1-2 in. between the tire and the surface. The vehicle may tip over and cause serious injury or death to you or others. Jack stands must always be used while working beneath the vehicle. Failure to follow these precautions could result in property damage, personal injury, and/or death.

- Loosen the wheel nuts before raising the vehicle.
- Close the release valve on the jack.
- Assemble the pump lever provided and insert it into the socket on the jack.
- Secure lever by turning it clockwise in the socket.
- Position the jack under the appropriate jack point and raise the vehicle by pumping the lever.

Installing and Removing A Wheel

- Loosen the wheel nuts.
- Jack up the vehicle until the wheel is clear of the ground.
- Unscrew the wheel nuts and remove the wheel (keep the wheel nuts clean).

NOTE

If the vehicle moves forward or backward while it is being jacked up, lower it, stabilize the vehicle, and repositioned the jack. When the vehicle is jacked up, the jack must stand vertically (plumb-line).

Mounting a New Wheel

- Before fitting the spare wheel, clean rust and dirt off the contact surfaces of the wheel and the wheel hub and from the wheel nuts.
- Note the specified wheel and tire size, tire load capacity, and speed code.
- Do not change the tire's direction of rotation.
- Do not damage, grease, or oil wheel nuts or their threads.

Centering Wheels With Wheel Nuts

- If dual assemblies are used, before placement, the inner wheel should be inspected to ensure all ball bearing rings are in the proper position.
- Install the wheel and snug the wheel nuts.
- Slightly tighten wheel nuts.

Lowering the Vehicle

- Slowly open the jack release valve to lower the vehicle until tire is resting on the ground.
- Tighten the wheel nuts in a crosswise pattern, as specified, with a torque wrench. For tire pressure and wheel bolt torque procedures, see the Mercedes-Benz Sprinter Van Operator's Manual.
- Remove the jack and stow.
- Check the tire pressure. For tire pressures see the Mercedes-Benz Sprinter Operator's Manual.
- Retighten the wheel nuts to the specified torque with a torque wrench after a distance of approximately 30 miles.

WARNING

Only certain tires meeting the tire size/load/speed index ratings contained in the Tire Pressure Tables, found in the Index Section of the Mercedes-Benz Sprinter's Operators or Owner's Manual, are certified to conform to FMVSS 120 for the Sprinter Vehicle at this time. Please check the sidewalls of your originally-equipped tires for specific makes/sizes, and speed load ratings when you need to replace your tires. To prevent accident, injury, or possible death, use only the correct tires for your tire replacement.

Wheel Bolt Tightening

Tighten all wheel nuts evenly in the crosswise sequence indicated.

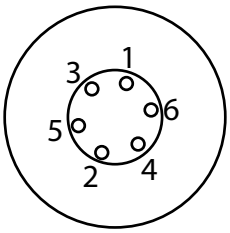

NOTE

Consult the Mercedes-Benz Sprinter Operators manual for extensive wheel tightening and wheel torque procedures, cautions, and warnings.

WARNING

For safety reasons, the wheel tightening torque must be checked immediately after changing a tire and again after 30 miles to 140 ft-lbs. The wheels could otherwise come loose.

Tire Rotation

Front and rear tires perform different jobs and can wear differently depending on the types of roads driven, driving habits, etc. To obtain the longest tire life, you should inspect and rotate your tires regularly.

Many automotive dealers and tire dealers will perform a free tire inspection to look for uneven or abnormal tire wear.

Tires should be rotated every 6,000 to 8,000 miles. For the longest tire life, any time irregular wear is seen have the tires checked, alignment checked, and tires rotated by your truck or tire dealer. Have the cause of uneven wear corrected.

NOTE

Vehicles with aluminum alloy wheels will require tires to be dismounted and remounted so as to leave rims in original locations because the dura bright finish is only applied to one side.

Rotation Pattern For Dual Rear Wheels

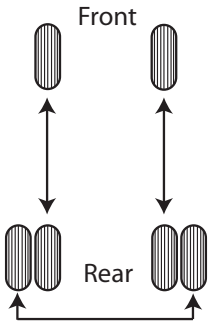

NOTE

Read the Mercedes-Benz Sprinter Operator's Manual for complete instruction on tire rotation, installation, and maintenance.

Support

Since touring coach's may sit for long periods it is important to properly support the tires if blocks are used for leveling.

Extreme caution must be taken to ensure that the tires are fully supported when using blocks to level the touring coach. The load on the tire should be evenly distributed on the block and in the case of duals, evenly distributed on blocks for both tires. If not done, the steel cables in the sidewall of the tires may be damaged and could lead to premature fatigue of the sidewall.

Correct

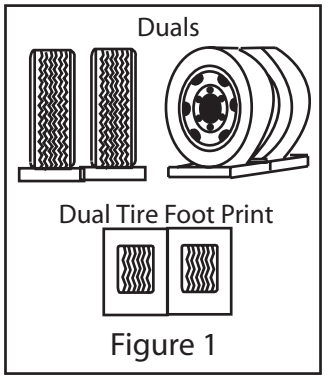

Figure 1

The CORRECT methods are shown in Figure 1. Dual tires are supporting the full load. Please note that the blocks are wider than the tread and longer than the tire's footprint. This provides maximum support to the tires and ensures that the load is evenly distributed throughout the tire's footprint area.

Incorrect

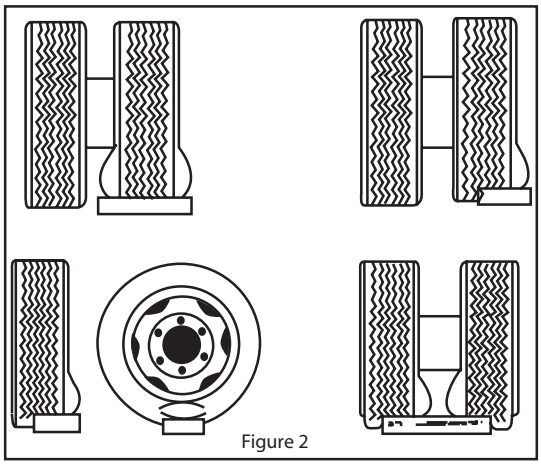

Figure 2

INCORRECT methods are shown in Figure 2: One tire, a portion of one tire, or portions of two tires are supporting the full load.

WARNING

Tires that are incorrectly supported may be damaged, which could lead to casing failure resulting in serious injury or property damage. If, on previous occasions, the tires have been incorrectly supported, hidden damage may be present. Please contact your local tire dealer and request an inspection and a determination of possible damage.

Air Ride Suspension

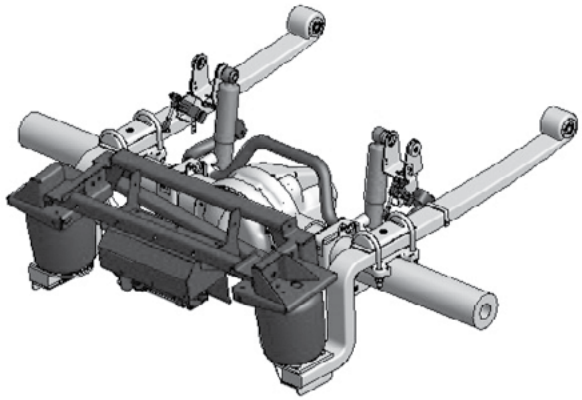

The touring coach is equipped with a rear axle air suspension. The Mercedes-Benz Sprinter Van is extremely suited for this air suspension system.

The full-air rear-axle air-suspension, has an electronic system which automatically monitors and adjusts the height level of the vehicle. This constant monitoring and adjusting (independent of the load, in the longitudinal and lateral direction and relatively independent of center gravity height) will automatically contribute to safer vehicle behavior and better comfort.

Manual Adjustments

A remote, located on the B-pillar next to the drivers seat, can be used to manually adjust the air suspension. To manually adjust, while parked set the emergency brake. With the engine running, press the up or down arrows to raise or lower the rear of the van. Two memory buttons, labeled 1 and 2, allow for two different memorized height settings. To set, adjust the van to the desired height then press and hold one of the memory buttons.

NOTE

Once the vehicle is in motion, the air ride system will automatically self-adjust to ride height. You can not manually adjust the height while the vehicle is in motion.

NOTES

AIRSTREAM®

Section 8
DRIVING

LOADING 8-2
Weighing 8-2
Vehicle and Trailer Weights and Ratings Definitions 8-2
Procedure for Weighing a Touring Coach . . . 8-3
Weight Distribution 8-3
SAFETY 8-4
Seat belts 8-4
Child Safety Seat 8-4
LATCH (Lower Anchors and Tethers for Children) 8-4
How to Install a LATCH Equipped Seat . . 8-4
TRAILER TOWING AND DRIVING TIPS 8-5
Trailer Hitches 8-5
Loading a Trailer 8-5
Checking Weights of Vehicle and Trailer . . . 8-5
Attaching a Trailer 8-6
TOWING A TRAILER 8-6
Towing a Boat 8-7
Tracking 8-7
Brake Controller 8-7
Backing Up 8-8
Rearview and Side Monitor System 8-9
Passing 8-9
Parking Your Touring Coach 8-9
TOWING YOUR TOURING COACH 8-9
SAFETY CHECK LIST 8-10
Exterior Check List (Before Entering Vehicle) .8-10
Interior Check List (Before Driving) 8-10

Loading

One of the most critical aspects of safely operating a touring coach is knowing the weight involved and where it is placed. The first thing to determine is how much cargo is being loaded and confirming that it is within the capacity of the equipment being used. Determining WHERE that load is placed is critical to the way your rig will handle on the road.

Do not try to guess what your touring coach weighs loaded. Load your touring coach including water and take it to a public scale. Weigh each axle of your vehicle. Refer to your axle weight and tire limits to see if you are within a safe range. Total all axle weights and make sure you are below the GVWR. If you are not overloaded, make sure your load is balanced. Do not load too much on one side. A balanced load is much easier to tow or drive.

Front to back balance is also important. Step back and look at your touring coach. Make sure there is not too much weight in the front or on the rear of the touring coach. Be sure to secure all items. Loose items can cause damage and can be a safety issue.

The Cargo Carrying capacity tag shown below is installed on every touring coach and can be found on the inside of the door on your vehicle.

MOTOR HOME OCCUPANT AND CARGO CARRYING CAPACITY
VIN ################
THE COMBINED WEIGHT OF OCCUPANTS AND CARGO SHOULD NEVER EXCEED
XXX kg or XXX lbs
Safety belt seating capacity: XXX
CAUTION
A full load of water equals XXX kg or XXX lbs of cargo @ 1 kg/L (8.3 lb/gal) and the tongue weight of a towed trailer counts as cargo

To arrive at “THE COMBINED WEIGHT OF OCCUPANTS AND CARGO SHOULD NEVER EXCEED” number, Airstream weighs the vehicle as finished and adds the weight of fuel. That number is subtracted from the GVWR of the touring coach and listed on the tag, The total weight of any and all cargo, including but not limited to dealer or customer modifications or additions, fluids (fresh water and holding tanks), food, clothes, tools, tongue weight of a towed trailer or vehicle, and passengers should never exceed the number listed while the touring coach is in transit.

The “SAFETY BELT SEATING CAPACITY” is the number of passengers that seat belts are provided for.

The “A FULL LOAD OF WATER EQUALS” number is arrived at by multiplying the fresh water tank capacity by 1Kg/L or 8.34 lb/gal.

When loading the vehicle it is important to keep the GVWR, GAWR, Tire Weight Ratings (listed on the vehicle tire Information placard), and the cargo and occupant capacity in mind and not to exceed these specifications. Your safety depends on not overloading the touring coach, axles, and tires. For more information, see Specifications on page 4-3.

Weighing

To determine the actual weight of your vehicle with personal cargo and water, it must be weighed on scales as you plan to travel. The most common scales are those used by states to weigh trucks along the highway. In rural areas, grain elevators, cement outlets and gravel pits are a good source.

NOTE

Weighing instructions for this touring coach are explained on the next page. If you have trouble locating scales, a call to your State Highway Patrol will usually find them cooperative in assisting you.

Vehicle and Trailer Weights and Ratings Definitions

Gross Vehicle Weight Rating (GVWR) is the maximum permissible weight of the touring coach.

Gross Vehicle Weight (GVW) comprises weight of vehicle including tools, installed accessories, passengers, cargo, and trailer tongue weight. It must never exceed the GVWR.

Gross Axle Weight Rating (GAWR) is the maximum permissible axle weight.

Gross Trailer Weight (GTW) is the maximum permissible trailer weight to be towed.

Trailer Tongue Weight Rating (TWR) is the maximum permissible weight of the trailer tongue. This counts as cargo when loading a touring coach.

NOTE

Check the Sprinter manual for all weights and the tire information placard location.

Front Axle GAWR	GVWR	Rear Axle GAWR	GCWR - GVW
SCALE WEIGHT		Optional Tow Weight	
_____ STEP 1 Front Axle GAW	_____ STEP 2 GVW	_____ STEP 3 Rear Axle GAW	_____ STEP 3a Tow Weight minus Weight of Trailer or Vehicle Towed
INDIVIDUAL WHEEL POSITION WEIGHT			
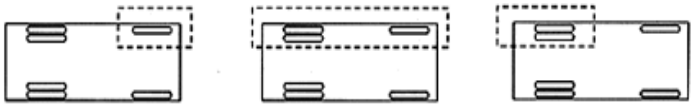			
_____ STEP 4 Left Front Wheel Position	_____ STEP 5 Left Side (Total LF + LR)	_____ STEP 6 Left Rear Wheel Position	
Calculated	Calculated	Calculated	
_____ Right Front Wheel Position Step 1 minus Step 4	_____ Right Front (Total RF + RR) Step 2 minus Step 5	_____ Right Rear Wheel Position Step 3 minus Step 6	

GAWR = Gross Axle Weight Rating

GVWR = Gross Vehicle Weight Rating

GCWR = Gross Combination Weight Rating

Procedure for Weighing a Touring Coach

Vehicle should be weighed loaded, as you normally travel.

1. Fill in first row from Specification Section of this manual.
2. Weigh vehicle as shown in row 2 (Scale Weight) and fill in blanks.
3. Weigh one side of vehicle as shown in Individual Wheel Position Weight.
4. Calculate other side as shown in last row.

NOTE

Check the Sprinter manual for all weights and tire information placard location.

Weight Distribution

Touring coach's have fresh water and gray water tanks, a heating and hot water system, and storage areas. It gives you great flexibility in loading. If you want to load down all the storage compartments, the amount of fluids may have to be reduced. Distribute your additional cargo as evenly as possible with the heaviest objects located as low as possible.

Even if you're going to a remote area, you can usually fill your water tank shortly before entering the area. Just reducing your load by 10 gallons of water lets you carry an additional 83.4 lbs. of cargo.

Safety

Seat belts

Federally approved seat belts are provided for the use of the driver, passenger, the second row captains chairs, and the rear lounge. Most states require, by law, that all passengers in a motor vehicle use seat belts while in transit. It is strongly recommended that all occupants remain seated with their safety belts firmly attached while the touring coach is in transit. The driver should adjust his or her seat so that he or she is able to reach all controls easily with the belt on, and be able to use all the travel on the foot brake. Seat belts should be placed as low as possible around the hips to prevent sliding out from under them in case of an accident. This places the load of the body on the strong hipbone structure instead of around the soft abdominal area. Remember, there should only be one occupant per seat belt when traveling.

The driver and front passenger seat belt buckle operation is explained in the Mercedes-Benz Sprinter manual.

The rear lounge and rear captain chairs seat belt buckles are secured by inserting the male end into the female buckle until the buckles are secured. To release the buckle press the release button on the female end.

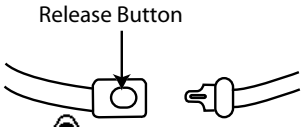

WARNING

Become familiar with and follow all directions, advice, and warnings pertaining to seats, seat belt operation, and restraint systems, provided in the Mercedes-Benz Sprinter Operator's Manual. Do not allow passengers to ride anywhere in the touring coach except in seats that are equipped with approved seat belts.

WARNING

Children must be secured in a federally-approved child restraint device. Failure to use proper restraints while in transit can result in severe or fatal injuries. Never place an infant seat that faces to the rear on the front passenger seat. Never place an unbelted infant seat on any seat while in transit.

Child restraint devices are designed to be secured with lap or lap/shoulder belts. All instructions supplied by the restraint manufacturer must be followed. Statistics have shown children are safer when properly restrained in a rear seating position than in a front seating position.

Don't hesitate when it comes to passenger safety. Make sure all passengers are properly restrained.

Child Safety Seat

LATCH (Lower Anchors and Tethers for Children)

LATCH is a system that makes child safety seat installation easier (without using seat belts). The LATCH system is a standard feature on the second row captains chairs in the Interstate GL models.

The LATCH equipped touring coach has two sets of small bars, called anchors, located in the crease of the seat where the back and bottom cushions meet. LATCH compatible child safety seats have a lower set of attachments that fasten to these vehicle anchors.

How to Install a LATCH Equipped Seat

1. ALWAYS read and follow the vehicle owner's manual and child safety seat manufacturer's instructions for correct installation and proper use.
2. Fasten the child safety seat's lower attachments to the vehicle's lower anchors. Tighten and adjust according to the instructions and check for a secure fit. The child safety seat should not move more than an inch forward or sideways.

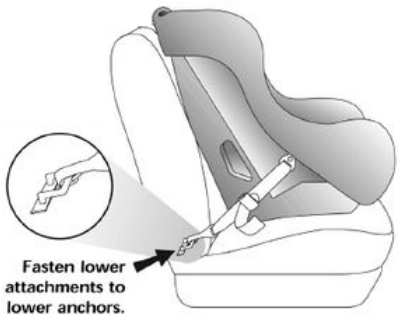

NOTE

If you are unsure if your child safety seat is compatible, look for the following LATCH logo.

Trailer Towing and Driving Tips

(Some text is partially excerpted from Mercedes-Benz Sprinter Operators Manual.)

WARNING

Failure to use proper equipment and driving technique can result in a loss of vehicle control when towing a trailer. Improper towing or failure to follow the instructions contained in this section can result in serious injury. Follow the guidelines below carefully to assure safe trailer operation. Ask your authorized Mercedes-Benz Sprinter or Airstream dealer if you require an explanation of information contained in the manuals.

Trailer Hitches

Units have hitches and wiring installed from the Mercedes-Benz manufacturer. The Sprinter 7- way connector is used for lights and charge line on a trailer. For further information, please see your authorized Mercedes-Benz Sprinter dealer.

To reduce the possibility of damage, remove the hitch ball adapter from the receiver when not in use.

Since this vehicle is designed and intended primarily as a load-carrying vehicle, towing a trailer will affect handling, durability and economy. Maximum safety and satisfaction depends upon proper use of correct equipment and avoiding overloads and other abusive operation.

WARNING

The total weight of the touring coach and trailer must not exceed the GCWR listed in the specification section of this manual. The maximum towing capacity varies according to the size of the touring coach and its GCWR. Vehicles should be properly equipped for towing trailers. Information on trailer hauling capabilities and special equipment required may be obtained from your Mercedes-Benz Sprinter and/or Airstream dealer.

Loading a Trailer

When loading a trailer, you should ensure neither the permissible GTW (Gross Tongue Weight), nor the trailer GVWR are exceeded.

Maximum permissible values are listed on the safety compliance certification labels for the vehicle and for the trailer to be towed. For their location, see the Mercedes-Benz Sprinter Operator's Manual. The lowest value listed must be selected when determining how the vehicle and trailer are loaded.

To assist in attaining good handling of the vehicle/trailer combination, it is important that the tongue weight be maintained at approximately 10-15 percent of the loaded trailer weight, but not to exceed the hitch rating. Tongue loads can be adjusted by proper distribution of the load in the trailer, and can be checked by weighing separately the loaded trailer and then the tongue.

The tongue weight at the hitch ball must be added to the GVW to prevent exceeding your Sprinter towed vehicle's rear GAWR.

When towing trailers, touring coach tires should be inflated to the highest pressures shown on the Sprinter Tire Information Placard. See Mercedes-Benz Sprinter Operator's Manual for its location. The Cargo Carrying Capacity (CCC) of this vehicle is reduced by the amount that equals the trailer tongue load on the trailer hitch.

Checking Weights of Vehicle and Trailer

To assure that the tow vehicle and trailer comply with the maximum permissible weight limits and to know the actual weights, have the loaded vehicle-trailer combination (tow vehicle including driver, passengers, cargo, and trailer fully loaded) weighed on a commercial scale as explained earlier in this section.

Also, check the vehicles front and rear axle weights and tongue weight. The values as measured must not exceed the Sprinter weight ratings listed on vehicle information placards and in the Mercedes-Benz Sprinter manual. These ratings are also listed in section 4 - Floor Plans, Specification Chart of this manual.

NOTE

Check the Mercedes-Benz Sprinter manual for all weights and tire information placard locations.

Attaching a Trailer

Please observe maximum permitted trailer dimensions (weight and length).

Most states and all Canadian provinces require safety chains between your tow vehicle and trailer. The chains should be crisscrossed under the trailer tongue. They must be attached to the hitch receiver and not to the vehicles bumper or axle. Be sure to leave enough slack in the chains to permit turning corners.

Most states and all Canadian provinces required a separate brake system for towing trailers.

WARNING

The towing vehicle's braking system is rated for operation at GVWR, NOT at the GCWR. A separate, functioning brake system is required for any towed vehicles or trailers weighing more than 1000 lb (450 kg) when fully loaded. NEVER exceed the GVWR, or the GAWR specified on a touring coach certification label. Also, NEVER exceed the weight ratings of a trailer hitch installed on a touring coach. Failure to heed any part of this warning could result in loss of control of the touring coach and towed vehicle or trailer which may cause an accident and serious injury. For specified towed vehicle braking requirements, consult the Mercedes-Benz Sprinter Operator's Manual that comes with this vehicle.

WARNING

Do not connect a trailer brake system (if trailer is so equipped) directly to the vehicle's hydraulic brake system if your vehicle is equipped with anti-lock brakes. If you do, neither the vehicle's brakes nor the trailer's brakes will function properly. Property damage, injury, or death to you or others may be the result.

The provided vehicle electrical wiring harness for trailer towing has a brake signal wire for hookup to a brake controller. Most states and all Canadian provinces require a breakaway switch on trailers with a separate brake system. The switch activates the trailer brakes in the possible event that the trailer might separate from the tow vehicle. Please consider using a trailer sway control system. For further information, see your authorized Mercedes-Benz Sprinter or Airstream dealer.

Towing a Trailer

There are many different laws, including speed limit restrictions, having to do with trailer towing. Make sure that your vehicle-trailer combination will be legal not only for where you reside, but also for where you'll be driving. A good source for this information can be the State Attorney General, State Police, or local authorities.

Before you start driving with a trailer, check the trailer's hitch, breakaway switch, safety chains, electrical connections, lighting, and tires. Also, adjust the mirrors to permit an unobstructed view beyond the rear of the trailer.

If the trailer has brakes using an electric brake controller, start your vehicle and trailer moving slowly, and then apply the brakes manually using the brake controller to be sure the brakes are working properly. Read and follow the controller manufacturer's recommendations.

When towing a trailer, check occasionally to be sure the load is secure, and lighting and trailer brakes (if so equipped) are functioning properly. Always secure items in the trailer to prevent load shifts while driving.

Take into consideration that when towing a trailer, the handling characteristics are different and less stable from those when operating the vehicle without a trailer. It is important to avoid sudden maneuvers.

The vehicle and trailer combination is heavier, and therefore is limited in acceleration ability and requires longer stopping distances. It is more prone to reacting to side wind gusts, and requires more sensitive steering input.

In order to gain skill and an understanding of the vehicle's behavior, you should practice turning, stopping and backing up in an area which is free from traffic.

If possible, do not brake abruptly, but rather engage the brake slightly at first to permit trailer to activate its brake. Then increase the braking force.

We want every owner to be a safe and courteous driver. A few hours of towing practice in a large empty parking lot will make pulling your trailer over the road much easier. Line out two corners for left and right turns. You may also use these corners to practice backing and parking.

Towing a Boat

While it is possible to tow a boat with your touring coach, Airstream does not recommend it. If you plan to pull and launch a boat, use caution when backing down boat ramps, and do not submerge any part of your touring coach in water. The slope of some boat ramps may be lower than others, requiring a portion of the tow vehicle to be submerged when launching. While this may be okay for some vehicles, your touring coach has sensitive electronics that water infiltration would irreparably damage.

WARNING

It is imperative that you do not allow any part of your touring coach to be submerged in water as it could cause damage to electronics that a warranty would not cover.

Tracking

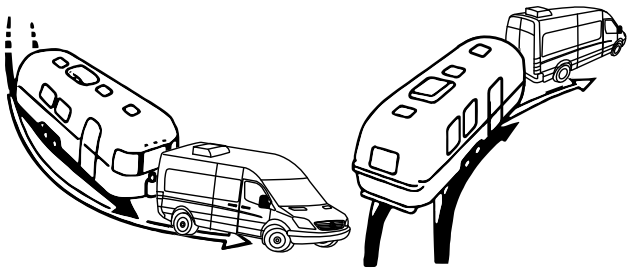

During practice, observe that the tracks made by the trailer wheels are distinctly different from those made by the tow vehicle. Studying this will make it easier for you to correct mistakes. Consider truck- or trailer-type fender or door grip rear view mirrors for maximum visibility. In most states, the law requires them.

After thoroughly inspecting your hitch, brakes, and tires, you should be ready to tow. Check traffic, signal that you are about to pull away, and start slowly. Look often in your mirrors, observe the action of the trailer, and then carefully move into the proper lane of traffic. Remember that the trailer wheels will not follow the path of the tow vehicle wheels; therefore, wider turns are necessary when turning to the left or right.

On freeways or expressways, try to pick the lane you want and stay in it. Always maintain plenty of space between you and the car ahead, at least the length of the tow vehicle plus trailer for every 10 mph. Remember that in order to pass another vehicle, you will need longer to accelerate. You must also allow for the length of the trailer when returning to the right hand lane. On a two-lane road cars may be lining up behind you because you are traveling at a lower speed. It is both courteous and sensible to signal and pull over at the earliest safe opportunity and let them pass.

WARNING

Take into consideration that when towing a trailer, the handling characteristics are different and less stable from those with operating the vehicle without a trailer. It is important to avoid sudden maneuvers. Sudden maneuvers may lead to loss of control over the vehicle-trailer combination.

Brake Controller

The brake controller (if so equipped) is activated when you apply the brakes of the tow vehicle. Your tow vehicle brakes will automatically apply the trailer brakes first when properly adjusted. This will help keep your tow vehicle and trailer in a straight line and make you stop as if you were driving the tow vehicle alone. If swaying or swerving should occur, briefly operating the controller separate from the vehicle brakes may help correct the situation. Practice this maneuver on a clear highway. Do not wait for an emergency and then grope for the controller.

When towing a trailer, you might encounter a temporary cooling system overload during severe conditions such as hot days when pulling on a long uphill grade, when slowing down after higher speed driving, or driving long idle periods in traffic jams. If the hot indicator light comes on, or the temperature gauge indicates overheating and you have your AC turned on, turn it off. Pull over in a safe place and put on your emergency brake. Don’t turn off the engine. Increase the engine idle speed. Lift the engine hood and check for fluid leaks at the radiator overflow outlet. Check to see that all drive belts are intact and the fan is turning. If you have a problem have it fixed at the next opportunity. If there is no problem the light should go off or temperature should come down within one minute. Proceed on the highway a little slower. Ten minutes later resume normal driving.

NOTE

If the transmission continually shifts between gears on inclines, manually shift to a lower gear. A lower gear and reduction of speed reduces the chances of engine overloading and/or overheating. When going down a long hill, shift into a lower gear and use the engine’s braking effect. Avoid riding the brakes, thus overheating the vehicle and trailer

brakes. If the engine coolant rises to an extremely high temperature (e.g. coolant temperature needle approaching the red zone) when the AC is on, turn off the AC. Engine coolant heat can be additionally vented by opening the windows, switching the climate control fan speed to high and setting the temperature control to the maximum hot position.

WARNING

Never open a radiator cap when the tow vehicle is hot. Add coolant when the vehicle is cool.

WARNING

On slippery pavement, do not use engine drag to help slow down as this may cause the rear wheels of the tow vehicle to skid. On icy pavement, drive slowly and if you feel the tow vehicle skidding, gently apply the trailer brakes only. This will bring the tow vehicle and trailer back into a single line. Chains do not help trailer wheels.

When going downhill in dry weather, downshift so that engine compression will slow the whole rig down. Take dips and depressions in the road slowly and do not resume normal driving speeds until you are sure that the trailer wheels are clear of the dip.

When driving in mud and sand, let the momentum carry the rig through. Apply power gently and use as little as possible. Stay in the tracks of the vehicle ahead and keep the tow vehicle in the highest possible gear. If you are stuck, it is best to tow out the entire rig together without unhitching.

Despite even the best hitch, you will notice that whenever a large bus or truck overtakes your rig the displaced air first pushes the trailer rear slightly to the right and then affects the front. It may be necessary to steer very slightly, momentarily, toward the bus or truck to help compensate for the sway induced by the passing-vehicle. Do not apply the vehicle brakes, as this can tend to exaggerate the situation. You may find, however, that briefly applying the trailer brakes with your manual control will help eliminate sway.

WARNING

CHOCK THE TRAILER WHEELS when stopping on a hill or slope. Leaving your tow vehicle in gear is not enough for standstill safety. Do not use trailer brakes as parking brakes.

Backing Up

In BACKING UP the important thing to remember is to DO EVERYTHING SLOWLY and to correct immediately if you see the trailer turning the wrong way. Concentrate on the rear of the trailer. With your tow vehicle and trailer in a straight line, back up slowly and turn the bottom of the steering wheel in the direction you want the trailer to go. Watch from the window or in the mirror until the rear of the trailer is pointing in the desired direction. Your tow vehicle will be following the trailer in an arc. Straighten the tow vehicle and trailer by turning the steering wheel more sharply, and then when they are in line, straighten the steering wheel.

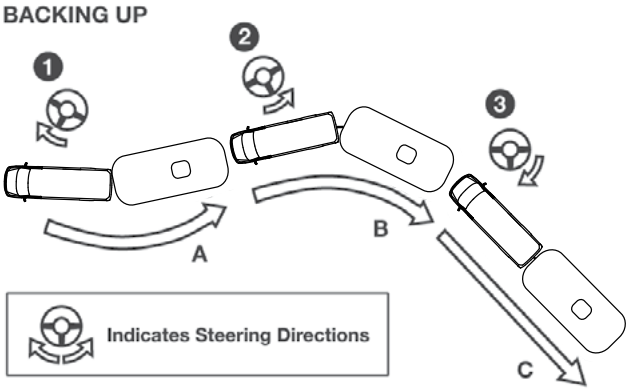

Start in position (A) start. Turning steering wheel as shown in (1). will put you in trailer position (B). Turning steering wheel show in position (2) puts you in trailer position (C). Steering position (3) returns front wheels to straight backing.

NOTE

Always try to back to your left because the visibility is much better.

When you do not make it on the first try it is usually much easier to pull forward to your original straight position and start over.

If your spouse or traveling companion normally directs you when backing they should position themselves forward of the tow vehicle so the driver can easily see them. Their directions should always indicate to the driver the direction the rear of the trailer should go. A little practice in a parking lot with the person giving directions can save a lot of frustration when backing into a campsite.

Rearview and Side Monitor System

An LCD digital monitor comes standard and replaces the existing rear view mirror. It comes with a built-in speaker and touch screen buttons to control all settings.

Your touring coach also includes side cameras which are displayed on the digital monitor. Side cameras are activated with the turn signals. Putting on your right turn signal will display the passenger side camera and your left signal will display the drivers side camera. Putting the vehicle in reverse will activate the back-up camera. The rear camera is the primary, and will override the side cameras if the vehicle is placed in reverse. The rear camera can be turned on while driving for use as a rearview mirror by pressing the power button.

NOTE

Carefully read and understand all manufacturer's instructions provided in your owner's packet prior to operating.

Passing

Extreme care must be exercised when passing another vehicle. A vehicle with a trailer attached will require additional passing distance than when driving without a trailer. Because your vehicle and trailer is longer than your vehicle alone, you will also need to go much further ahead of the passed vehicle before you can return to your lane.

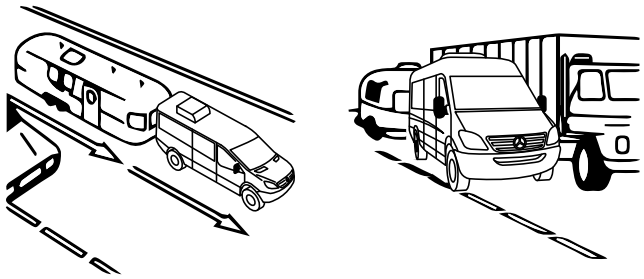

Parking Your Touring Coach

To reduce the risk of personal injury or damage to the vehicle power train as a result of vehicle/trailer movement, always:

- Keep right foot on the brake pedal.
- Shift gear selector lever to position "N".
- Have a second person place wheel chocks on downhill side of left and right trailer wheels.
- Slowly release the brake pedal allowing the vehicle and trailer to roll into chocks until stopped.
- Using the manual parking brake beside the driver's seat. Lift the brake lever slightly while pressing the button, then press the lever to the floor.
- Move gear selector lever to position "P".
- On inclines, turn wheels toward the road curb.

Towing Your Touring Coach

See the Mercedes-Benz Sprinter Operators Manual for towing information.

NOTE

Considerable damage may occur if the touring coach is improperly lifted for towing purposes. Only qualified professional towing service companies with proper equipment should be used. Observe all cautions and warnings in the Mercedes-Benz Sprinter Operator's Manual before towing your touring coach.

Safety Check List

Your Airstream Touring Coach should be given a thorough safety check before a trip. Regular use of the following list will provide safe operation of your touring coach and will help you spot any malfunctioning equipment and correct the problem as soon as possible. The list is to help you and may not be all-inclusive.

WARNING

Failure to heed the following items may cause damage to the vehicle or personal injury.

Exterior Check List (Before Entering Vehicle)

1. Check condition of tires and keep tires at recommended inflation pressure per the tire and loading placard on the driver's door B-pillar.
2. Check that macerator hose, city water hookup, TV cable/satellite, power cord, and all exterior components are unhooked and properly stowed.
3. Check that all external compartments and filler openings are properly closed, latched, and/or locked.
4. Check that items stored on exterior of vehicle are securely tied down.
5. Verify if any items stored on exterior of vehicle would present a clearance problem.
6. Follow all automotive manufacturer's recommendations on checking and filling fluid levels.
7. Check exterior lights and general condition of vehicle.

Interior Check List (Before Driving)

1. It is important that all doors be completely closed and locked during travel.
2. Turn off water pump and close all faucets.
3. Check that refrigerator door is closed and latched if equipped.
4. Check that nothing heavy is stored in overhead or high cabinets, which could fall out and cause injury. Heavy items should be stored in lower cabinets.
5. Stow tables.
6. Check that counter tops, cooktop, and shelves are clear of even small items that could become projectiles during an emergency braking or accident.
7. Latch the wet bath door.
8. Do not cook unless the touring coach is parked and stable. Hot food or liquid could scald due to a sudden stop or accident while traveling.
9. Check that any internal stowage is securely held in place
10. Check that lights and switches are set in positions safe for travel.
11. Adjust the driver's seat so that you can easily reach and operate all controls. Make sure seat is locked in position. Do not adjust driver's seat swivel or recline mechanisms while vehicle is moving. The seat could move unexpectedly causing loss of control.
12. Check that all passengers have seat belts on properly.
13. The freedom of movement of the brake and accelerator pedals must not be impaired in any way.
14. Check rear view mirrors adjustment, inside and outside. Adjust window coverings if necessary for maximum visibility.
15. Secure children in a federally-approved child restraint device.

AIRSTREAM®

Section 9
MAINTENANCE

MAINTENANCE SCHEDULE 9-2
SUGGESTED MAINTENANCE AND REPLACEMENT PARTS 9-3
Exterior Care 9-4
TIRE CARE 9-5
Tire Care Tips 9-5
Tire Inspection and Storage 9-5
PLUMBING 9-6
Water System (Self-Contained) 9-6
Water Pump and Strainer 9-6
Sanitizing 9-7
Sanitizing the Fresh Water System . . . 9-7
Sanitizing the Fresh Water Tank 9-8
DRAIN AND WASTE SYSTEM 9-8
Macerator Pump 9-8
Emptying the Black and Gray Water Holding Tanks 9-9
Macerator Impeller Release Feature . . . 9-9
Manual Operation 9-9
Extended Stays 9-10
Black Water Tank Flush 9-10
Drain System Cleaning 9-10
WINTERIZING AND STORAGE 9-10
Touring Coach Winterization 9-10
Valve Locations for Winterization 9-10
Instructions for Winterization 9-11
Optional-Additional Steps for Winterization 9-11
Water Heater Winterizing 9-12
Macerator Pump Winterizing 9-12
Volta System Storage 9-12
Long Term Storage (Greater than 3 months) 9-12
Short Term Storage (Less than 3 months) .9-13
Brief Storage Periods 9-13
Restoring Service 9-13
Toilet 9-14
Toilet Winterizing 9-14
Maintenance 9-14
Troubleshooting 9-14
ELECTRICAL DIAGRAMS 9-15
12-Volt Main Schematic 9-15
30 Amp 120 Volt Schematic 9-25
Audio/Video Schematic 9-26
Standard 30 Amp Circuit Breaker Layout . . .9-27
SOLAR PANEL WIRING 9-28
VOLTA SYSTEM LIMITATIONS 9-29
Volta System Temperature Limits 9-29
Volta System Temperature Ranges 9-30
FRESH WATER LAYOUTS 9-31
Drain Valve Locations (GL) 9-33
Drain Valve Locations (GT) 9-33
FAQS AND ANSWERS 9-34

Maintenance Schedule

WARNING

Failure to maintain your touring coach can cause premature and unexpected parts breakage and/or erratic operation that may be hazardous.

NOTE

See appliance manufacturer's literature for further information.

Every 1,000 miles or 60 days	
Smoke Alarm/CO Detector	Test and replace battery as required.
Tires	Check tire pressure (See Specifications).
GFCI Circuit Breaker	Test and record.

Once a Month	
Hydronic System	Run the burner for at least 15-20 minutes to help maintain the system.

Every 5,000 miles or 90 days	
Door Step	Lubricate and inspect moving parts.
Wheel Lug Nuts	Torque Lug Nuts to 140 ft. lbs.
7-Way Plug	Spray with contact cleaner.

Every 10,000 miles or 6 months	
Tires	Inspect and rotate.
Windows, and Door Seals	Clean with mild detergent and apply 303 Aerospace Protectant
Exterior	Wax

Every year	
Hydronic System	Test alkalinity in the system coolant and inspect the exhaust system for damage.
Seams	Check and reseal exterior seams, windows, lights, and vents as needed.
Interior Cabinets	Visual inspection of latches and locks, hinges and slides. Silicone spray as needed.

Once every three years	
Hydronic System	Replace Heat Transfer Fluid/ Century Chemical Boiler Antifreeze

Suggested Maintenance and Replacement Parts

(Part numbers listed are Airstream part numbers and can be ordered by calling a certified Airstream dealer.)

WARNING

Always replace the bulb or light fixture with the correct bulb for that light or matching fixture. Failure to heed this warning could cause fire, property damage, personal injury, or death.

Exterior 12-Volt Lighting – For additional exterior lights refer to your Chassis Owner's manual.	
LED Linear Utility Light, 42"	PN – 513672-01
LED Pin Light	PN – 512909-05
NOTE: Most Exterior Lighting is LED and a replacement fixture will be required.	

Interior 12-Volt Lighting	
LED Aisle Motion Light	PN – 513070
LED Flex Tape Light w/12" Tail, 33.5"	PN – 513747-33
LED Flex Tape Light w/12" Tail, 54"	PN – 513747-54
LED Spot Light w/Frosted Lens	PN – 513136
LED Surface Mount Light w/SS Trim Ring	PN – 512376
LED Swivel Overhead Light	PN – 513673
LED Flex Tape Light, 61.02"	PN – 513743-61
LED Flex Tape Light, 49.21"	PN – 513743-49
LED Flex Tape Light, 19"	PN – 513743-19
LED Flex Tape Light, 62.99"	PN – 513743-63
LED Flex Tape Light, 82.68"	PN – 513743-83
LED Flex Tape Light, 178"	PN – 513743-178
LED Flex Tape Light, 25.75"	PN – 513743-25
LED Shower Light Ring	PN – 513724
LED Domed Surface Mount Light, White	PN – 513745
Light Bar, 24"	PN – 513888
NOTE: Most Interior Lighting is LED and a replacement fixture will be required.	

Replacement Breakers - USA Breakers	
Breaker, Bryant, 30 Amp	PN – 510564-02
Breaker, Bryant, 15-15 Amp	PN – 510564-03
Breaker, Bryant, 20-20 Amp	PN – 510564-04
Breaker, Bryant, 15 GFCI Amp	PN – 510564-07
Breaker, 12V DC Type II, 6 Amp	PN – 510947-06
Breaker, 12V DC Type II, 8 Amp	PN – 510947-08
Breaker, 12V DC Type II, 10 Amp	PN – 510947-10
Breaker, 12V DC Type II, 15 Amp	PN – 510947-15
Breaker, 12V DC Type II, 20 Amp	PN – 510947-20
Breaker, 12V DC Type II, 40 Amp	PN – 510947-40

Replacement Rivets		
	Interior	
Part Number	330127-03	330149
Rivet Name	AD43ABS	ADS46ABSR
Head Style	Dome Head	Dome Head
Body Diameter (Inches)	0.125 (1/8)	0.125 (1/8)
Hole Size	0.129-0.133	0.129-0.133
Drill Number	30	30
Grip Range In (Inches)	0.126-.187	0.125-0.375
Length Under Head (Max. Inches)	0.328	0.960
Head Diameter (Nominal)	0.250	0.312
Head Height (Max. Inches)	0.040	0.060
Typical Sheer Strength (lb)*	155	150
Typical Tensile Strength (lb)*	235	150
*Values shown are a guide only and may vary depending upon the application.		

Exterior Care

The following exterior care products are recommended by Airstream. Read and follow label directions. Exterior sealant should be checked and resealed once a year.

Walbernize Super Seal (PN - 28433W) - Use to clean and polish while depositing a reflective, water-proof, glaze finish. Recommend two applications a year.

Acryl-R Seam Sealer (PN - 28430W-01 [16 oz can-Gray]) - Use anywhere a fine bead of gray sealant is required.

Acryl-R Seam Sealer (PN - 28430W-04 [16 oz can-White]) - Use anywhere a fine bead of White sealant is required.

Acryl-R Seam Sealer (PN - 28430W-06 [16 oz can-Clear]) - Use anywhere a fine bead of Clear sealant is required.

AdSeal Premium Quality Sealant Adhesive (PN - 365330-01 [10 oz tube-White]) - Use anywhere a thicker bead of White sealant is required.

AdSeal Premium Quality Sealant Adhesive (PN - 365330-02 [10 oz tube-Gray]) - Use anywhere a thicker bead of Gray sealant is required.

AdSeal Premium Quality Sealant Adhesive (PN - 365330-04 [10 oz tube-Black]) - Use anywhere a thicker bead of Black sealant is required.

Touch-up Caulking	
Caulk, Seamfil, White	PN – 360301-02
Caulk, Seamfil, Tan	PN – 360301-05
Fil-Stik, Black	PN – 28431W-01
Fil-Stik, Gray	PN – 28431W-02
Fil-Stik, White	PN – 28431W-03

Mercedes Sprinter Touch-up Paint Codes	
Iridium Silver	9775
Black	9040
Arctic White	9147

*Paint codes, along with weight ratings, can be found on a sticker attached to the drivers seat pedestal.

Tire Care

The most important function of tires is to provide traction while moving and grip when steering or stopping. The tires on your touring coach are designed for highway use and must be properly maintained in order to maximize tire life, as well to provide a safe mode of transportation.

Tire Care Tips

To reduce the risk of tire failure, we strongly recommend the following:

1. Check the pressure in your tires, including your spare (not provided with vehicle), at least monthly when the tires are cool (after the vehicle has been stopped for 3 hours and then driven less than 1 mi). Do not reduce pressure when tires are hot. Use a tire gauge to check pressure and maintain it at the recommended level.
2. Never overload your tires. Heed the maximum load-carrying capability of your tires.
3. Check your tires frequently for scrapes, bulges, separations, cuts, or snags resulting from use. See your tire dealer immediately if any such condition is discovered.
4. Never operate your vehicle in excess of lawful speeds, the maximum speeds justified by driving conditions, or in excess of speeds recommended for the tires you are using.
5. Make every effort to avoid running over objects that may damage the tire through impact or cutting, such as chuck holes, glass, metal, etc.
6. Never drive on smooth tires. Tires should be removed when 2/32 in. of tread depth remains. In most states, it is illegal to drive with less than 2/32 in. remaining tread depth.
7. Park out of the sun whenever possible when in warm climates. In desert regions, use tire covers to prevent ultra violet light deterioration to tires.

Tire Inspection and Storage

Before taking your touring coach on a trip or when removing it from an extended storage period, make it a practice to inspect the overall condition of your tires. Check for any type of condition or damage that might result in failure. A thorough check should include both inside and outside sidewalls, tread area, and the condition of hardware such as valve stems, valve caps, and wheels. The tread should be checked for any unusual wear, cracking, penetrations, and/or cuts. An uneven wear pattern can indicate misalignment or worn suspension parts.

Since many touring coach's are used seasonally and sometimes stored for extended times, it is possible that tires will take many years to wear out. Tires, as any rubber product, will age over time. If tires show cracking in the sidewall or tread surfaces that are more than 2/32-in. deep, they should be replaced before your next trip or vacation. Store your touring coach in a cool, dry area away from major heat sources and extreme cold. An enclosed storage area is best with no exposure to electromagnetic sources such as generators or transformers. If you must keep your touring coach outside, cover your tires from direct sunlight. Take your touring coach to your tire dealer for service to check or correct any of these conditions.

WARNING

For safety reasons, the wheel tightening torque must be checked immediately after changing a tire and again after 30 miles to 140 ft-lbs. The wheels could otherwise come loose.

Plumbing

Water System (Self-Contained)

The fresh water system consists of a city water hookup, fresh water tank gravity fill, fresh water tank and drain valve, water pump, hot and cold water lines, water heater, fresh water line low point drain valves, and faucets. Full explanations on the locations and use of these features are explained in this section.

Before using a water system, check that the water heater bypass valve is turned to the use position; see Winterizing and Storage on page 9-10. Check that the water heater's drain valve is closed. Close all low point drain valves and the fresh water tank drain valve.

Fill the water tank by opening the exterior gravity feed water fill door. A high-pressure RV/Marine FDA approved drinking water hose of at least ½-in. diameter made from material that is tasteless, odorless, and non-toxic can now be inserted, or use a clean bucket and funnel to fill the tank. It's a good idea to let the water run through a hose for a short time to flush it out. RVers sometimes fill their tanks with "home" water to avoid strange water that may be distasteful to them on short outings. Remember, the more water you carry in the Fresh Water tank, the less cargo carrying capacity you have for other items. The amount of water in the tank may be checked on the Multiplex Control Panel.

Because the water heater is tankless it does not need to be filled. However, if the system has not been used for some time or is being used for the first time since draining the lines it is normal for air to have gotten into the lines. To expel the air, open the hot side of either the galley, wet-bath, or exterior shower faucet and turn on the water pump or connect to an exterior city water source. Close the cold side of all faucets. For some time the open faucet will only sputter. This is because the air is being pushed out through the lines. Once the air is expelled, a steady stream of water will come from the faucet.

Now, open a cold faucet. It will sputter for a short time, but will soon expel a steady stream. All other faucets can now be opened until all air is expelled.

Once the system is filled with water and the faucets are closed, the water pump will shut off. When a faucet is opened, the pump will come back on automatically. If the faucet is just barely open, it is normal for the pump to cycle on and off rapidly.

It is normal for a pump to occasionally cycle when all faucets are off to keep the water pressure at the set point. However, if it cycles frequently (e.g. more than a few times an hour) the plumbing system, pump, and pump strainer should be checked to be sure it is not losing pressure through a slow water leak or back through the pump.

NOTE

To prevent equipment damage, the water heater should only be started after the water system is primed and ready for use.

NOTE

Turn the water pump off when the touring coach is left unattended or in motion.

Water Pump and Strainer

The water pump is controlled by the Multiplex Systems control panels. Once the switch is turned on, the pump will run until the water pressure reaches approximately 50 psi. At this point, an internal pressure switch will shut it off. When a faucet is opened, the water pressure will drop and the pump will start to run again.

As a general rule, the water pump should be turned off while using a city water hookup; however, the water pressure at some campgrounds may be low. The water pump can be turned on to assist the city water hookup pressure. Be sure there is some water in the fresh water tank. The pump will only use the water that is needed out of the tank to bring the pressure up to the usual standard of 50 psi.

The water pump and strainer are located under the galley accessed by removing the galley drawer, or below the refrigerator and accessed by removing the panel, depending on the model. The strainer should be visually checked for accumulation of sand or debris that could affect water flow.

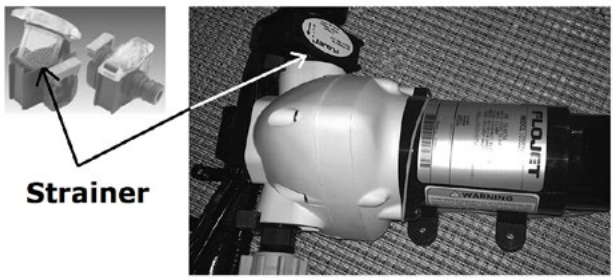

To clean the strainer screen: with the clear plastic at the top, press on the sides of the strainer releasing the tabs holding the clear plastic top in place, hold the sides in, and pull straight up on the clear plastic top to

remove the screen assembly. Rinse all debris from the screen. Replace the screen assembly by aligning the screen in the seating groves and pressing gently down until the tabs catch and hold the clear plastic top in place.

The inlet and outlet hoses and the strainer assembly are held in place by self-sealing, blue, quick-connect fittings. To disconnect a hose or the strainer, grasp the blue tab on the female fitting by the grooved finger edges and pull straight out on the tab. This will release the male fitting connected to the hoses and strainer. Be sure that both the female and male fitting on the disconnect are free of all debris and are not damaged before replacing. Check the pump system for leaks any time the disconnect fittings on the hoses and/or strainer are removed.

CAUTION

Failure to check the quick disconnect fitting for water leaks when reinstalling inlet and outlet hoses or the water pump strainer may cause the pump system to leak, causing damage to personal property.

Sanitizing

Potable water systems require periodic maintenance to deliver a consistent flow of fresh water. Airstream recommends sanitizing before and after storage, after new component installation, and if the system is contaminated. When determining how often to sanitize the system, consider environmental factors, usage, and the quality and taste of the water coming out of the system.

Decide whether you want to use an RV fresh water cleaner & deodorizer or a mixture of bleach and water. The following instructions are for the use of bleach. If using an RV fresh water cleaner and deodorizer, follow the instructions on the container for mixture and contact time, and use the instructions below to introduce the solution into the system.

Gather the following supplies ahead of time. These are available at most RV supply stores:

- RV fresh water cleaner & deodorizer; or bleach
- Gallon-size container(s) or a clean bucket suitable for potable water
- RV antifreeze hand pump kit with a garden faucet fitting/connector
- City water fill hose to connect to city water; choose one that is acceptable for RV use (tasteless/odorless/non-toxic)
- A hose with a garden faucet fitting/connector at one end and nothing at the other (to pump fluid from a gallon-size container into your water inlet). Your city water fill hose may work if it will fit into the opening of your container; choose one that is acceptable for RV use (tasteless/odorless/non-toxic)

For the following procedures, you will need to know how many ounces of bleach to add to your bleach/water mixture. Multiply “gallons needed” by 0.13; the result is the ounces of bleach needed. To reduce the amount of time it takes to disinfect the tank from four hours to one hour, double the ounces of bleach.

Sanitizing the Fresh Water System

1. Mix 2-3 gallons of bleach/water solution using the guidelines above.
2. Set the Water Management Panel selector to the Winterize/Sanitize Fixtures setting.
3. Connect a hose to the Water Management Panel inlet and place the other end in the bleach water mixture.
4. OPEN all faucets (hot and cold).
5. Turn the water pump ON and run it until the mixture starts coming our of the faucets and the odor of chlorine is detected. Once the solution is running from the taps you can start closing them. Move from one fixture to the next, shutting them off as you go until all the lines are full. Turn the pump off as you empty and transition from one container to the next.
6. Turn the pump OFF and leave the solution in the system for 4 hours of contact time to complete the disinfection process. Or, if doubling the bleach concentration, 1 hour.
7. Set the Water Management Panel selector to the City Fixtures setting.
8. Connect to a city water supply and allow the faucets to run until the bleach/water solution is flushed from the system.

Sanitizing the Fresh Water Tank

1. Determine the amount of bleach you need for your tank capacity using the guidelines above. Tank capacity is listed in Section 4.
2. Pour the bleach into a 1-gallon container and fill it with water to make a bleach/water concentrate.
3. Set the Water Management Panel selector to the Tank Fill setting.
4. Connect the hand pump kit to the Water Management Panel inlet and place the other end into the container.
5. Pump the concentrated bleach mixture into the fresh water tank; disconnect the hand pump kit.
6. Fill the tank using a city water connection and leave the solution in the tank for 4 hours of contact time to complete the disinfection process. Or, if doubling the required bleach, 1 hour.
7. Drain the tank, refill from the city water connection, and drain again. Repeat until the bleach solution is flushed out.

NOTE

The sanitizing procedure outlined above is in conformance with the approved procedures of RVIA ANSI A 119.2 and the U.S. Public Health Service.

Drain and Waste System

Your touring coach has a drain and waste system that includes waste-holding tanks made from corrosion-free, molded plastic, with trouble-free dump valves.

The main (Black Water) holding tank enables you to use the toilet for several days away from disposal facilities. The waste water from the sink, shower, bath, and lavatory drains into the auxiliary (Gray Water) holding tank.

Each tank has its own dump valve with both tanks draining through a common outlet. Therefore, only one sewer hose connection is needed when hooking up to a dump station.

Almost all campgrounds will have dumping facilities. Park directories, such as Woodalls and Rand McNally, also list dumping stations. Furthermore, the navigation systems GPS can be used to locate nearby dumping stations or highlight stations along your route.

Check your monitor panel frequently (main Multiplex control panel or Seelevel monitor). When the Black Water holding tank is completely full, sewage cannot be emptied from the toilet bowl. If the Gray Water holding tank is overfilled, drain water will back up into the shower floor pan and cause an unpleasant cleaning job. Never drain the tanks at any place other than an approved dumping station.

WARNING

Never put wet strength paper towels or tissues in your holding tank since they will not dissolve and can catch in the mechanism of the dump valve. Colored toilet tissue is slower to dissolve than white. Most motorhome accessory stores offer tissue designed for RVs that will completely dissolve.

Macerator Pump

The waste pump is the ideal solution for emptying holding tanks on touring coach's. The macerator section grinds waste down to a particle size of 1/8-in. maximum. The waste pump will macerate and pump all waste and tissue normally found in recreational vehicle waste systems.

CAUTION

The waste hose is pressurized when operating the macerator pump. Secure the loose hose end at the disposal facility with a supplied inlet adaptor before turning on pump.

The high-pressure waste hose is stored on an electric hose reel and connected to the Discharge Port Adaptor. It has a threaded, drip-proof valve with a versatile, two-size, threaded adaptor allowing the valve to be connected to 3 sizes of threaded inlets, including an exterior home sewer clean-out. The adaptor snaps over the valve threads. A rubber ring is also provided to lodge into a non-threaded inlet. If the rubber ring seems loose when used, Airstream recommends using some type of weight to further secure the hose.

Each holding tank, the macerator pump, and macerator pump electric hose reel have individual switches which are located in the roadside utility compartment. Each valve switch has a light that illuminates to let you know the valve is opened. Pressing a dump valve switch and holding it for 2-3 seconds until it is lit opens a holding tank valve. Pressing it again for 2-3 seconds closes it. The macerator pump has an ON/OFF toggle switch. The reel has a switch for releasing and retracting the hose, once the hose is released it is deployed manually by pulling the hose out. To retract the hose, press and hold the retract button while guiding the hose back and forth onto the reel evenly.

NOTE

Do not run Macerator pump more than 15 minutes continuously. Do not run the Macerator pump dry for more than 30 seconds. THE MACERATOR WILL NOT HANDLE HARD SOLID OBJECTS, SANITARY NAPKINS OR RAGS. Never put wet strength paper towels, tissues, or sanitary napkins in your holding tank. They will not dissolve and will jam the mechanism of the dump valve and the macerator pump impeller.

Emptying the Black and Gray Water Holding Tanks

1. Remove the high pressure waste hose by opening the hose reel compartment door and momentarily pressing the “release” switch. Once released, the hose can be manually pulled out. Secure the hose at the disposal facility inlet using the threaded or rubber adaptor and open the drip proof valve on the end of the hose.

CAUTION

The pressure from the macerator pump may push the hose from the inlet if the hose is not secured properly.

2. Open the Black Water valve. Empty the Black Water tank first and the Gray Water tank second, using the Gray Water to help flush the pump and hose of Black Water sewage.
3. Turn on macerator pump to liquefy and pump out the solids in the tank.
4. When black tank is empty, turn off the pump.
5. Open the Gray Water tank valve and turn on the pump. Run until just before the pump runs dry. Any trickle of gray water left will remain in discharge hose behind drip proof valve and is typical. Remember, running the pump dry for more than 30 seconds could damage the pump.
6. Turn the drip-proof valve off and remove the hose adaptor from the dump station inlet. Retract the hose into the hose reel by holding the switch in the “retract” position. Be sure to guide the hose back and forth onto the reel evenly. Close the compartment door.

NOTE

Watch all connections while dumping. Close dump valve immediately, turn off pump, and close hose drip-proof valve if a leak is noticed.

Macerator Impeller Release Feature

After long periods of non-use, a stuck impeller can be easily broken loose with a screwdriver inserted in the motor shaft slot. Remove the rubber boot, turn the shaft clockwise, and replace the rubber boot. The impeller can usually be found under the touring coach, near the macerator hose reel.

Manual Operation

In case the electric dump valves fail to open, manually pull/push the arm once, to open and close the valve. The manual arm is located under the vehicle, near the macerator hose reel.

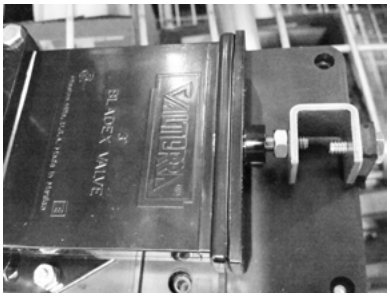

Extended Stays

When you are in a park with a disposal facility, empty the tanks every few days or whenever they become almost full. Pumping a large volume of liquid through the tanks at a time will keep toilet paper and other solids completely washed away. Remember to empty the Black Water tank first and then the Gray Water tank using the Gray Water to flush the system. This practice will avoid the accumulation of solids in the tank, which could lead to an unpleasant cleaning job.

Should solids accumulate, fill the tank about half full with water using the black tank flush inlet, and then drive the touring coach for a few miles. Don't wait until the tank is packed solid. The turbulence and surging of the water will usually dissolve the solids into a suspension so the tank can be drained. Draining the tanks as described will protect them from freezing during storage.

Black Water Tank Flush

Inside the macerator hose reel utility compartment is a water hose connector for the "black tank flush." To use, hook up a garden hose and turn it on. Within the tank, a head with multiple holes will spray the interior surface of the tank. Once the tank is about half full, turn the garden hose off and flush the water from the tank using the macerator pump. The gate valve should be closed for the first couple of minutes, and then opened to let the water out in a rush. Repeat as needed. It is recommended the tank flush be used every time the black tank is emptied or the holes on the spray head may become clogged.

Drain System Cleaning

The only cleaning agents that can be used without causing harm to the system are household ammonia and tri-sodium phosphate in small quantities. Do not use any product that contains any portion of petroleum distillates. This type of product will attack the rubber seals of your toilet and dump valve. Also, do not use any dish detergent or abrasive cleaners. All products should be marked as approved for ABS drainage systems.

Winterizing and Storage

When storing your touring coach, use the same precautions as you would in your own home in regard to perishables, ventilation, winterizing, and rain protection. In addition, for prolonged storage periods, flush out all the drain lines and waste holding tanks. Also, drain the entire water system, and the Fresh Water tank. Instructions for draining the water system are explained in the following paragraphs on winterizing.

The main consideration in winterizing is to guard against freezing damage to the fresh water lines, the waste drain lines, the waste holding tanks, the hydronic heating and hot water system, and the battery.

NOTE

Sprinter recommends disconnecting the current to all chassis electric consumers using the engine battery disconnect cable if the vehicle sits for periods longer than 30 days. This will save jump starts, battery charge ups, and possible battery damage and replacement. The Mercedes-Benz Sprinter Operator's Manual describes its location, operation, and cautions in detail.

NOTE

In very cold weather, winterizing the motor coach is recommended to prevent damage to the waste systems.

Touring Coach Winterization

To perform these steps, you will need an adapter with an air regulator to connect an air compressor to the water management panel inlet, and access to an air compressor. Adapters are available at most RV stores.

Valve Locations for Winterization

Low point drain valves - there are four total: Two are under the galley (remove the lower drawer), or, depending on your model, they may be below the refrigerator (remove the vent below the refrigerator). Two more are under the curbside lounge; remove the cup holders.

Fresh water tank drain valves - on the front of the fresh water tank; under the touring coach.

Water heater bypass valve - on the water line connected to the water heater; behind the service panel under the roadside rear lounge.

Water pump - under the galley (remove the lower drawer), or, depending on your model, it may be below the refrigerator (remove the vent below the refrigerator)

Water Management Panel - roadside exterior access door.

Instructions for Winterization

1. Level the touring coach from side to side and front to rear, turn the water pump OFF, and disconnect the city water.
2. OPEN all the hot and cold water faucets.
3. OPEN the low-point drain valves.
4. OPEN the fresh water tank drain valve.
5. Allow all water to stop draining and proceed to the next step.
6. SET the selector on the Water Management Panel to CITY FIXTURES.
7. For this step, you will need someone to operate the toilet foot pedal/flush valve. Using the air compressor, apply at MAX 50 PSI of air pressure at the Water Management Panel inlet until no water remains in the system. Operate the foot pedal on the toilet. You may need to depress the pedal a few times to work out all the water by allowing some air pressure to build up between flushing. Once all the water has been blown from the system, disconnect the air and continue to the next step.

WARNING

Use the City Fixtures setting for compressed air winterization. Do NOT exceed MAX 50 PSI when using compressed air to clear the system of water during winterization. The 100 PSI MAX label on the water management panel only refers to the valve's maximum pressure.

8. For this step, have a catch pan or a towel ready to place under the water pump outlet to prevent water from running out into the touring coach. Remove the quick-connect outlet fitting from the water pump. Turn the pump ON briefly to remove any remaining water from the pump head and lines running from the tank.
9. Check the water pump strainer to be sure no water remains.
10. If you plan to add RV antifreeze using the optional steps below, RECONNECT the water pump. Otherwise, leave the fittings from the pump disconnected until the system is ready to be used again. Best practice: leave a note as a reminder near the multiplex screen that the water pump is disconnected.
11. If you plan to add RV antifreeze using the optional procedure below, save this step for the end. Otherwise, proceed to the Volta System Storage section in this manual and complete the steps for short or long term storage; see Volta System Storage on page 9-12.

Optional-Additional Steps for Winterization

An additional step to winterization is to consider adding a non-toxic RV antifreeze (approved for drinking water systems) to the water lines using the Sanitize/Winterize setting on the Water Management Panel to draw RV antifreeze from an unpressurized container into the water system, using the water pump.

To perform these steps, you will need RV antifreeze and a 1/2 inch diameter tasteless, odorless, non-toxic, hose with a standard garden hose thread designed for RV use.

Before beginning, read the RV antifreeze manufacturer's label for instructions specific to the antifreeze you plan to use. It may take a few gallons to fill the entire system so prepare accordingly. As you follow these steps, it will be helpful to have another person watching and operating the faucets, shower heads and toilet valve.

1. RECONNECT all lines and CLOSE all drain valves.
2. OPEN the sink and shower drains if they are closed.
3. Ensure all the water faucets and shower heads, hot and cold, internal and external, are OPEN.
4. SET the Water Management Panel selector to Sanitize/Winterize.
5. Attach the hose mentioned above to the Water Management Panel inlet port and insert the other end of the hose down to the bottom of the RV antifreeze container.
6. Turn the water pump ON and run it until antifreeze starts coming out of the faucets. Once antifreeze is running from the taps you can start closing them. Move from one fixture to the next, shutting them off as you go until all the lines are full. Turn the pump OFF as you empty and transition from one antifreeze container to the next.

7. Allow the antifreeze to flow down drains. Flush the toilet and allow antifreeze to flow down the toilet. If equipped, operate the toilet hand sprayer until antifreeze is coming out. If equipped, work the hand shower sprayer while holding it down in the shower until antifreeze is coming out, and do the same with the external shower head. Dump any remaining small amounts of antifreeze down a drain.
8. Shut the water pump OFF once all the lines are full.
9. OPEN all the faucets and leave them open.
10. DISCONNECT the hose, rinse it out with fresh water and store.

WARNING

Remove all RV antifreeze spillage from all sinks, drain pans, and faucet parts after winterizing. Failure to do so could damage surface finishes. Do not use water to rinse antifreeze down the drain as it will dilute the antifreeze.

11. Complete step 11 from the previous set of instructions on winterization by proceeding to the Volta System Storage section in this manual and complete the steps for short or long term storage; see Volta System Storage on page 9-12.

Water Heater Winterizing

If the touring coach is to be stored during winter months, the water lines must be drained to prevent damage from freezing. Once drained, the water lines can be “blown out” by applying air pressure at the city water inlet or RV, non-toxic antifreeze can be added. The water heater only holds a couple of cups of water in the heat exchanger, which is drained with the low point drain valves.

Macerator Pump Winterizing

Plan your winterizing and storage ahead, and be sure the holding tanks are drained and flushed thoroughly. This is very important, as the frozen sewage and water could seriously damage the system. After dumping the tanks, add RV, non-toxic antifreeze to one of the holding tanks and start the macerator pump. Run the pump until the RV, non-toxic antifreeze comes out the end of the pump hose, then close the dump valve. As extra protection, open the toilet valve and add RV, non-toxic antifreeze through the toilet into the Black Water tank and pour RV, non-toxic antifreeze into a sink drain to protect the holding tanks, valves, and pump from residual water freezing.

Volta System Storage

Long Term Storage (Greater than 3 months)

Preparations should be made to protect the life and performance of the Flex Pack when not in use. When leaving the vehicle in storage, turn OFF the Volta System by pressing the Battery Power On/Off pushbutton.

To prepare for long-term storage:

1. Fully charge the house battery (Flex Pack), or at minimum charge to above 70%.
2. Press the Battery Power On/Off pushbutton and verify that the pushbutton LED and touchscreen turn off, indicating the Volta System is off.
3. Turn on the Volta System every three months to verify the pack is maintaining a high State-of-Charge (SOC). If necessary, charge the system to above 70% SOC before storing the vehicle again.

WARNING

Failure to turn off the Volta System before storing your vehicle long term (greater than 3 months) will cause the Flex Pack(s) charge to deplete faster, even if all loads on the system are removed, which can cause permanent damage to the Flex Pack.

WARNING

Do not store the Volta System at low State-of-Charge. The system is designed with a limited energy reserve, in case the system is left on and the low voltage shutdown occurs. This reserve may last for three months until irreversible damage could occur. Neglecting system maintenance and allowing the Flex Pack to come to this state will result in voiding the warranty.

WARNING

To protect the Flex Pack, avoid using or storing the Flex Pack at or above 134°F (57°C). Storage of the Flex Pack at elevated temperatures is not recommended, as it will reduce the lifetime and capacity of the Flex Pack.

NOTE

It is possible to leave the touring coach plugged in for long-term storage, but it is unnecessary to do so with a full charge or greater than 70% charge, following the instructions above.

Short Term Storage (Less than 3 months)

To place the system in Charge Only Mode for short-term storage:

1. Press the On/Off pushbutton to turn ON the system
2. Ensure the appropriate charge rate is selected. For more information about setting the charge rate on the Volta touchscreen; see Inverter/Charger Screen on page 5-14.
3. Press the Battery Power On/Off pushbutton to turn OFF the system. Verify that the pushbutton LED and touchscreen turn off, indicating that the Volta System is off.
4. Connect the vehicle to shore power to enter Charge Only Mode.

While in Charge Only Mode:

- The Battery Power pushbutton LED will flash green indicating the system is in Charge Only Mode. The Volta System turns on, charges as needed, and maintains an operational state.
- The battery heater will operate in cold climates when connected to shore power and the temperatures drop below 59°F/15°C.
- If shoreline power is lost the Flex Pack System turns off to retain charge.

WARNING

To protect the Flex Pack, avoid using or storing the Flex Pack at or above 134°F (57°C). Storage of the Flex Pack at elevated temperatures is not recommended, as it will reduce the lifetime and capacity of the Flex Pack.

Brief Storage Periods

For shorter periods of time, the Volta System can be left on if you are connected to shore power in order to keep the refrigerator cold. However, if the cord is accidently knocked loose or a breaker trips, the system will be running on battery power only, which could result in a dead battery if not caught in time. If you plan to leave the system on and unattended, take precautions to prevent such circumstances.

WARNING

To protect the Flex Pack, avoid using or storing the Flex Pack at or above 134°F (57°C). Storage of the Flex Pack at elevated temperatures is not recommended, as it will reduce the lifetime and capacity of the Flex Pack.

Restoring Service

1. Close the low point drain valves, holding tank dump valve, water faucets, and fresh water tank drain.
2. Reconnect water pump line.
3. Add water to the fresh water tank.
4. Turn the water pump on.
5. Open and close faucet valves one at a time until water runs clear at all faucets signaling the RV, non-toxic antifreeze is flushed out of lines. Go back and recheck water clarity at all faucets.
6. Turn off water pump.
7. Hook up city water, open faucet valves, and recheck water clarity.

Toilet

Toilet Winterizing

Draining Method: Turn off touring coach's water supply. Drain toilet bowl. Disconnect supply line at water valve. Completely drain the toilet's water supply line.

Antifreeze Method: Use RV, non-toxic antifreeze only.

NOTE

To avoid damage when using air pressure to blow water from the lines, make sure the toilet valve is in the open position.

NOTE

If water is frozen in the toilet, do not attempt to flush until the ice thaws. Never use automotive type antifreeze.

Maintenance

If the bowl-sealing blade does not operate freely after extended use, it may be restored to its original, smooth operating condition by applying a light film of silicone spray to the blade. To clean the toilet use Thetford Aqua Bowl or any other high grade, non-abrasive cleaner. Do not use highly concentrated or high acid content household cleaners. They may damage the rubber seals.

Troubleshooting

1. Leaks:
   a. Back of toilet: check water supply line connection at water valve. Secure or tighten as necessary. If leak persists from water valve, replace.
   b. Vacuum breaker leaks while flushing: replace vacuum breaker or water module, depending on model.
   c. Between closet flange and toilet: check flange nuts for tightness. If leak continues, remove toilet and check flange height. Use Thetford spacers to adjust, if necessary, to 7/16-in. above floor. Replace flange seal.
2. Toilet won't hold water:
   a. Check for and remove any debris from blade-ball seal track.
   b. Check blade/ball seal compression mechanism. If blade/ball seal is worn, replace.
3. Harder than normal pedal operation: Apply light film of Thetford Toilet Seal Lubricant & Conditioner or silicone spray to blade/ball. (Note: To avoid damage, do not use spray lubricants other than silicone.)
4. Poor flush: The pedal must be held completely down to flush. A good flush should be obtained within 2 to 3 seconds. If problem persists, remove the water supply line and check flow rate.

Electrical Diagrams

12-Volt Main Schematic

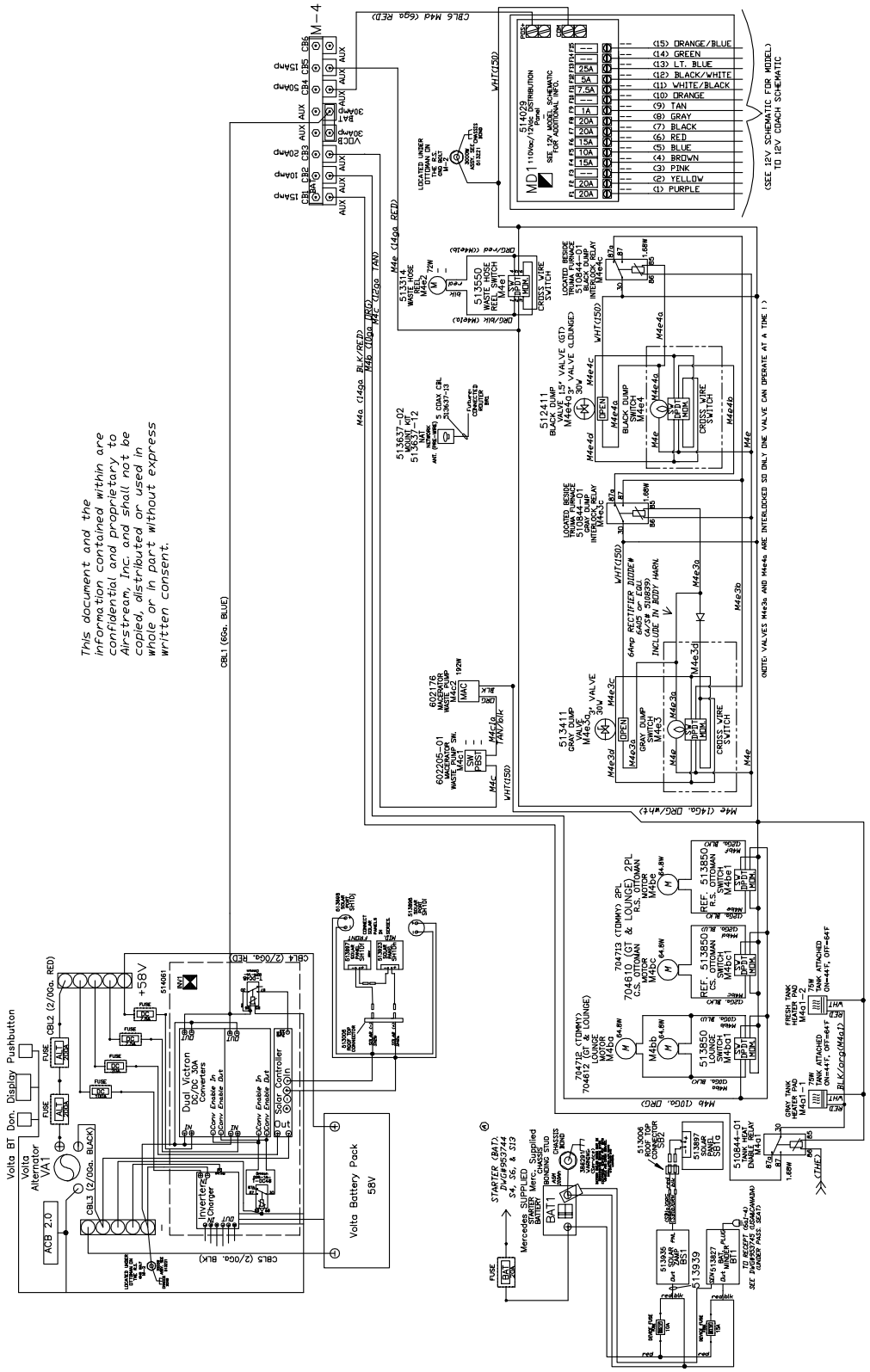

12-Volt Model Schematic

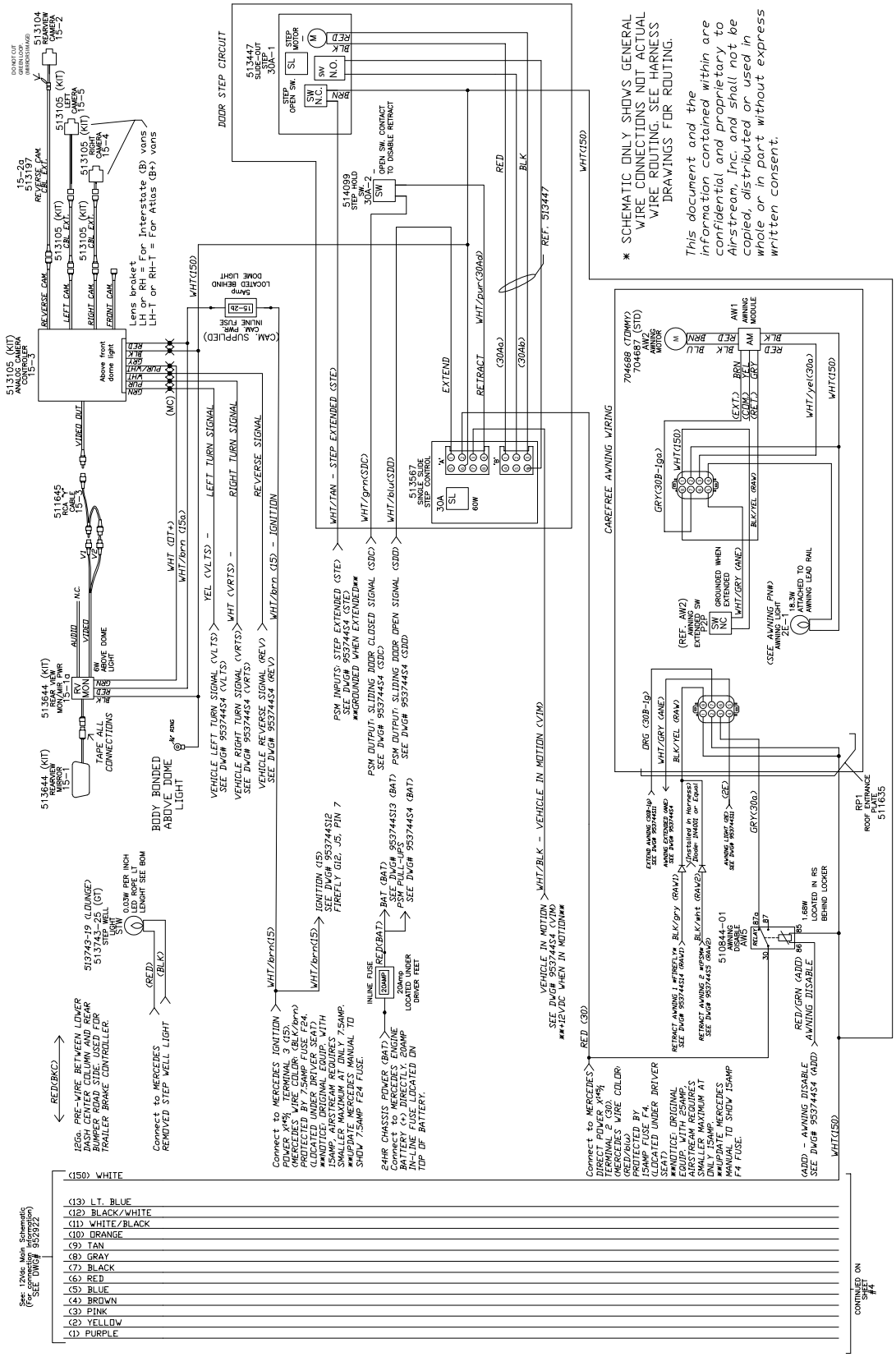

12-Volt Model Schematic

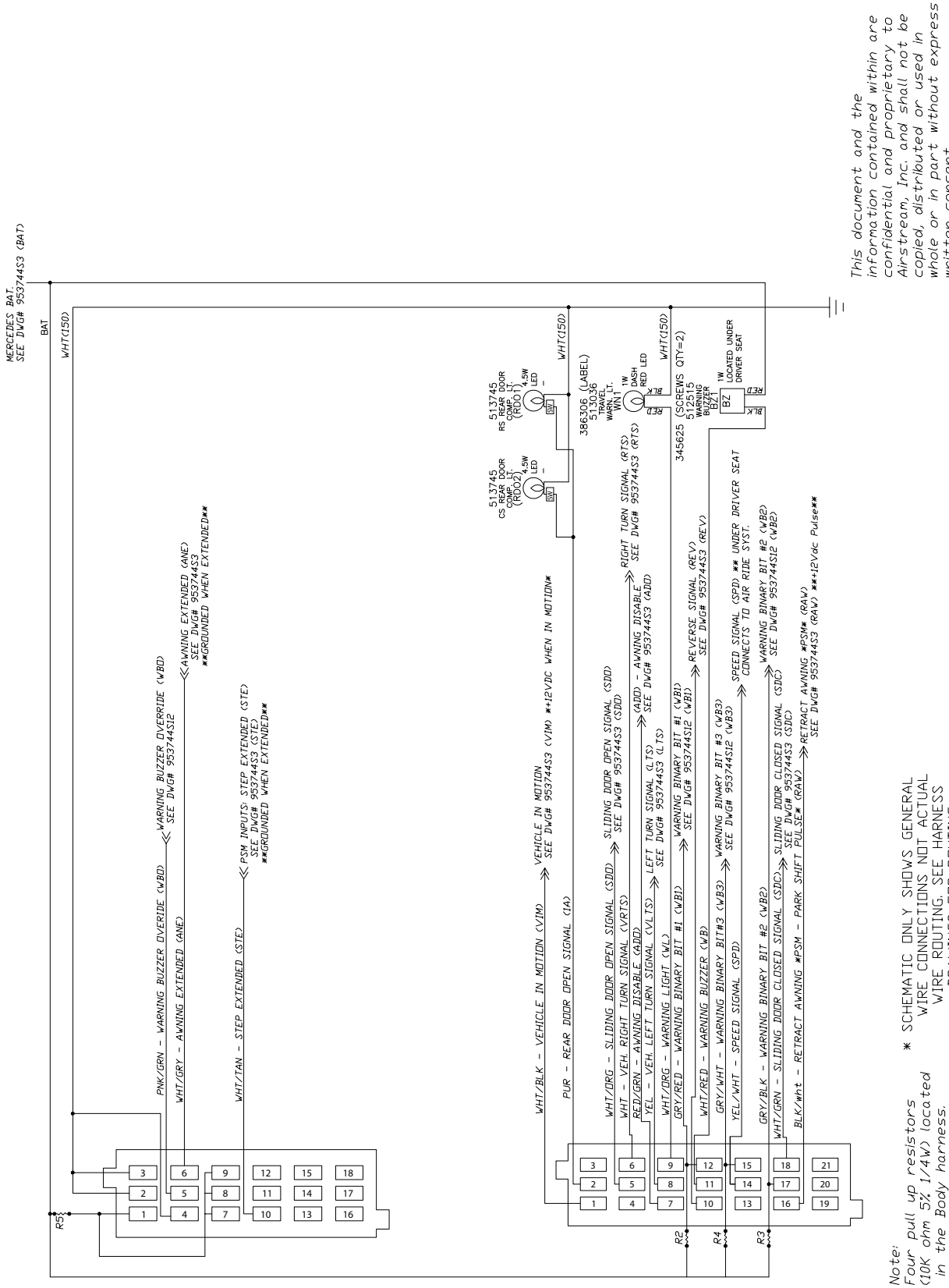

This document and the information contained within are confidential and proprietary to Airstream, Inc. and shall not be copied, distributed or used in whole or in part without express written consent.

12-Volt Model Schematic

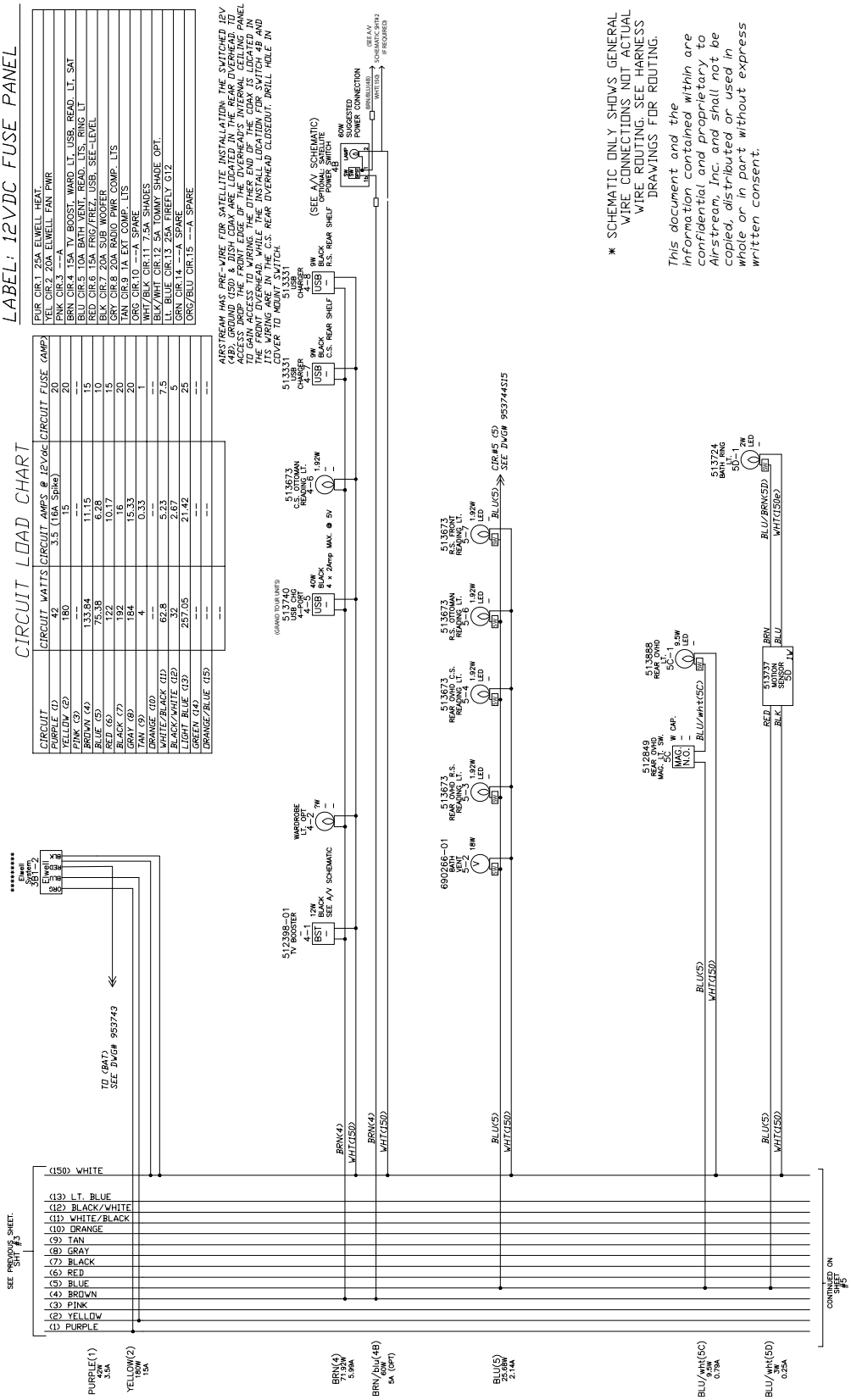

12-Volt Model Schematic

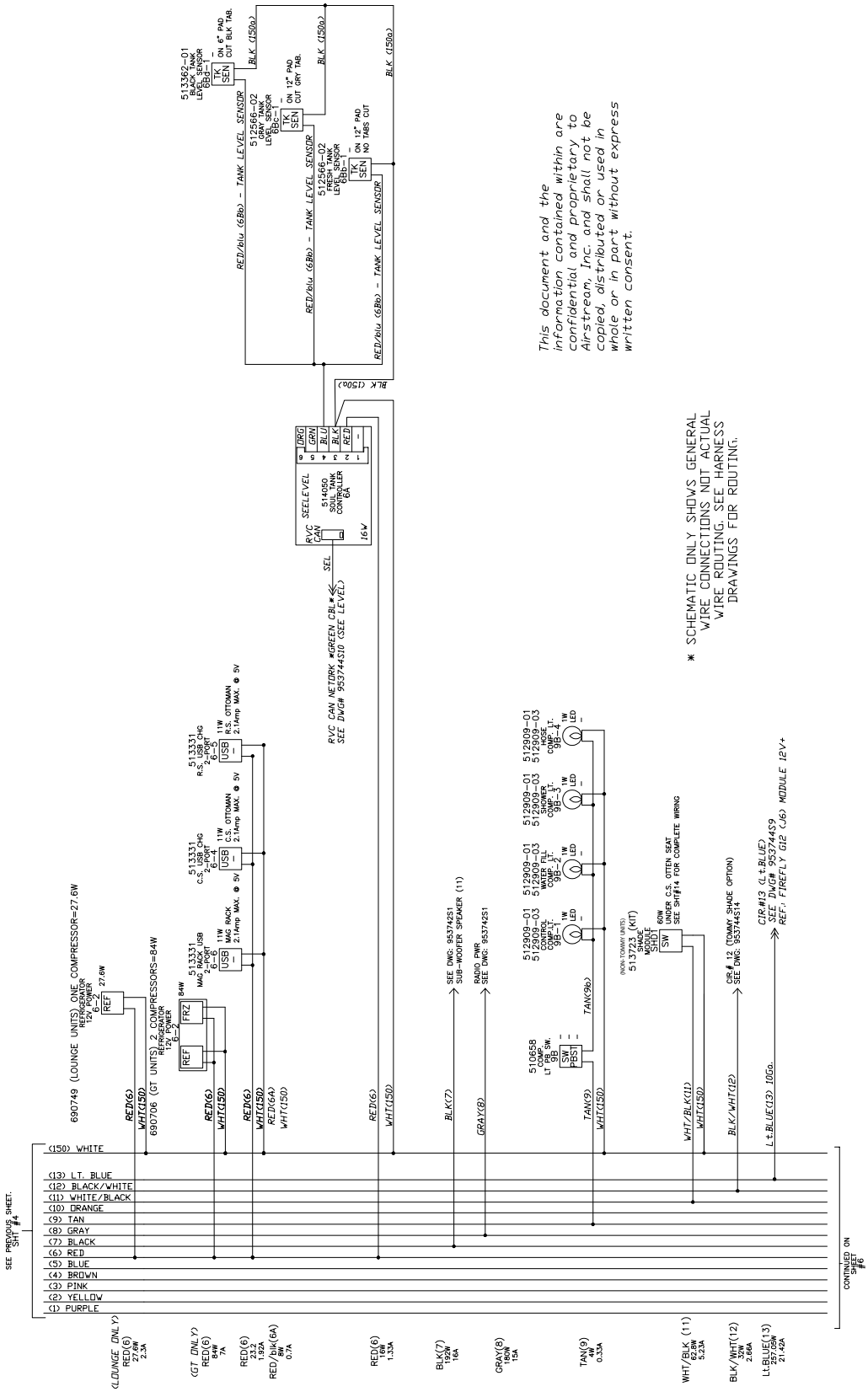

12-Volt Model Schematic

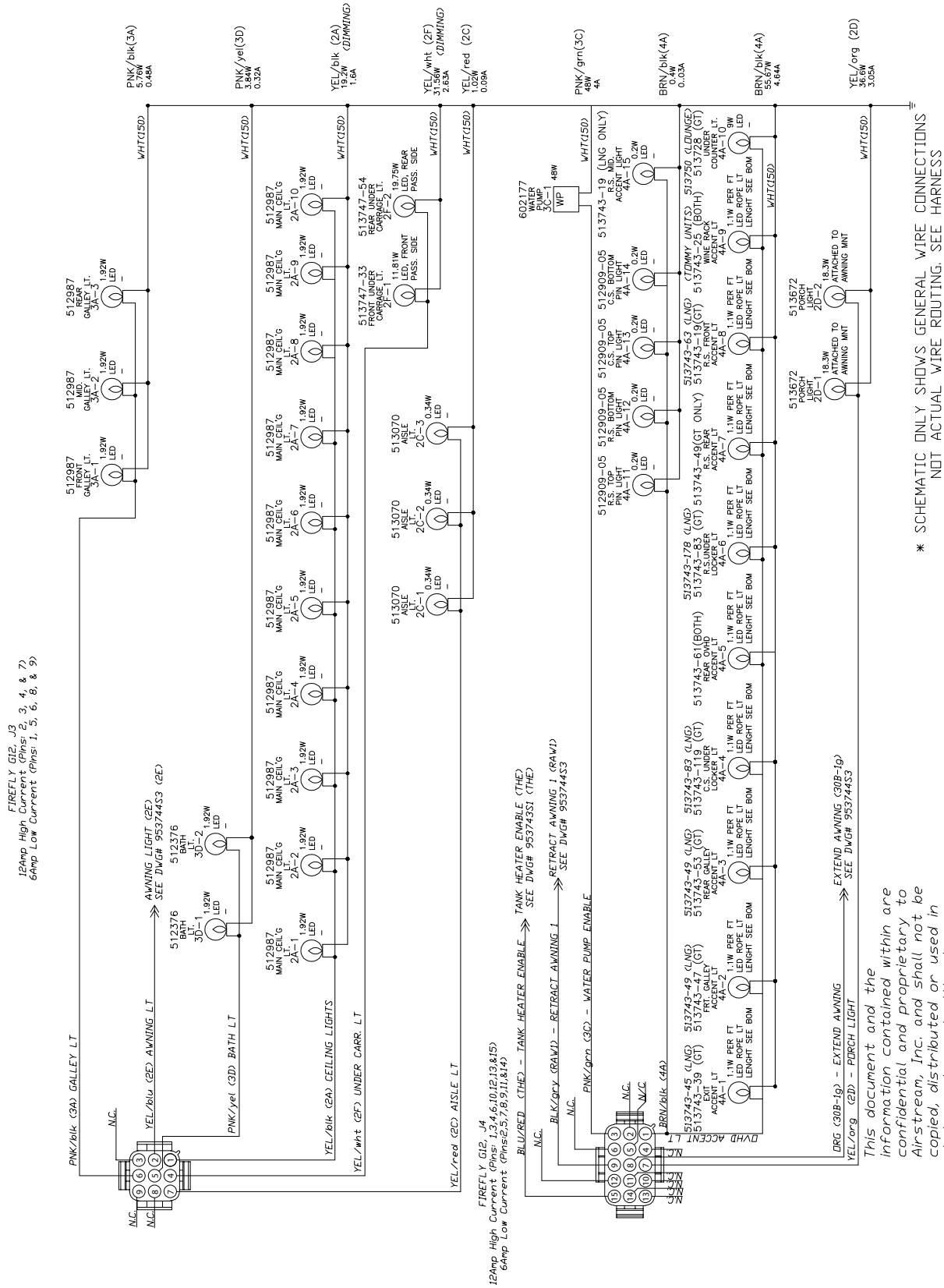

12-Volt Model Schematic

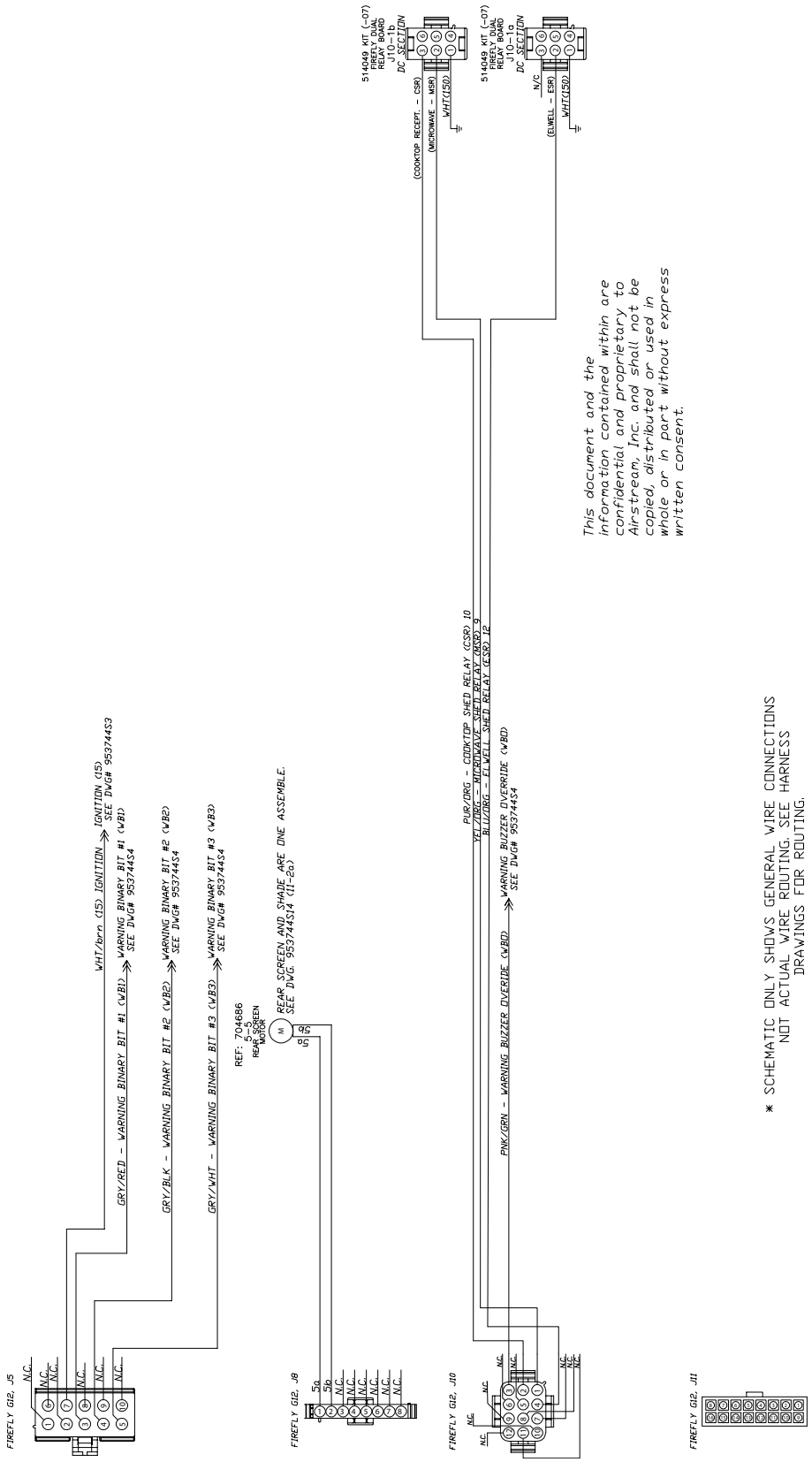

12-Volt Model Schematic

12-Volt Model Schematic

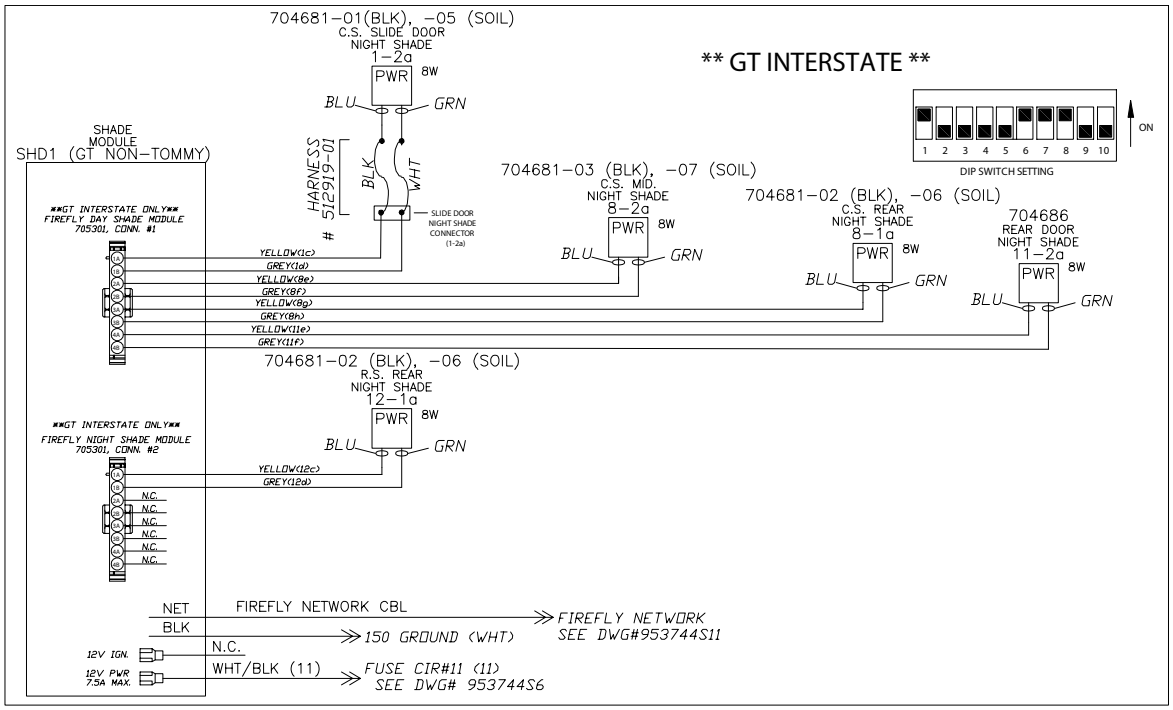

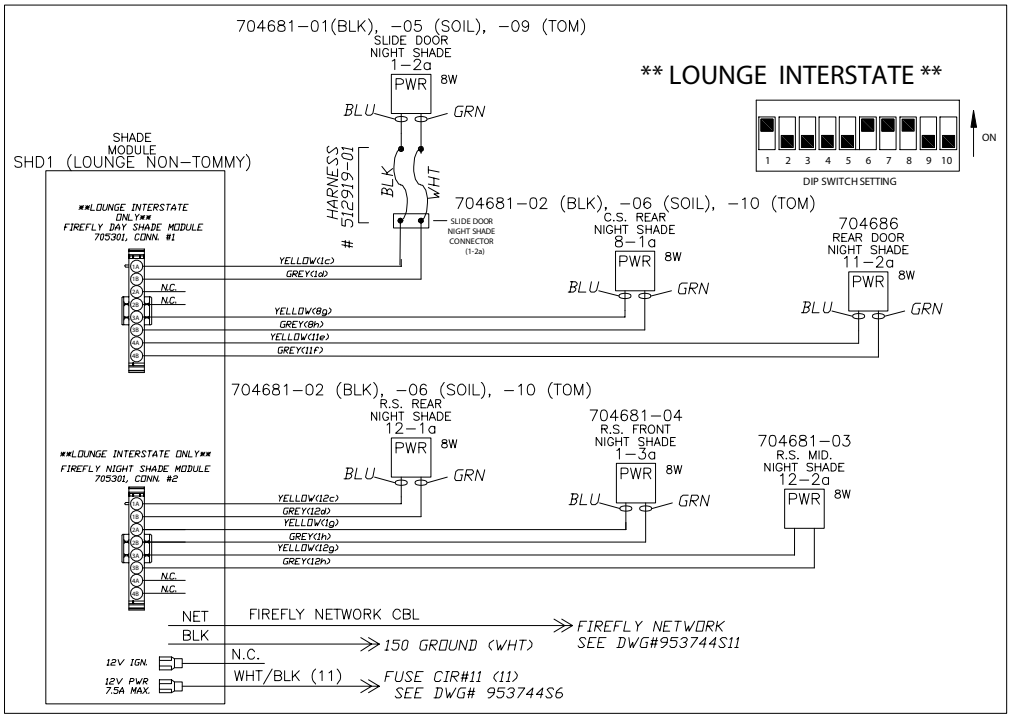

This document and the information contained within are confidential and proprietary to Airstream, Inc. and shall not be copied, distributed or used in whole or in part without express written consent.

* SCHEMATIC ONLY SHOWS GENERAL WIRE CONNECTIONS NOT ACTUAL WIRE ROUTING. SEE HARNESS DRAWINGS FOR ROUTING.

12-Volt Model Schematic

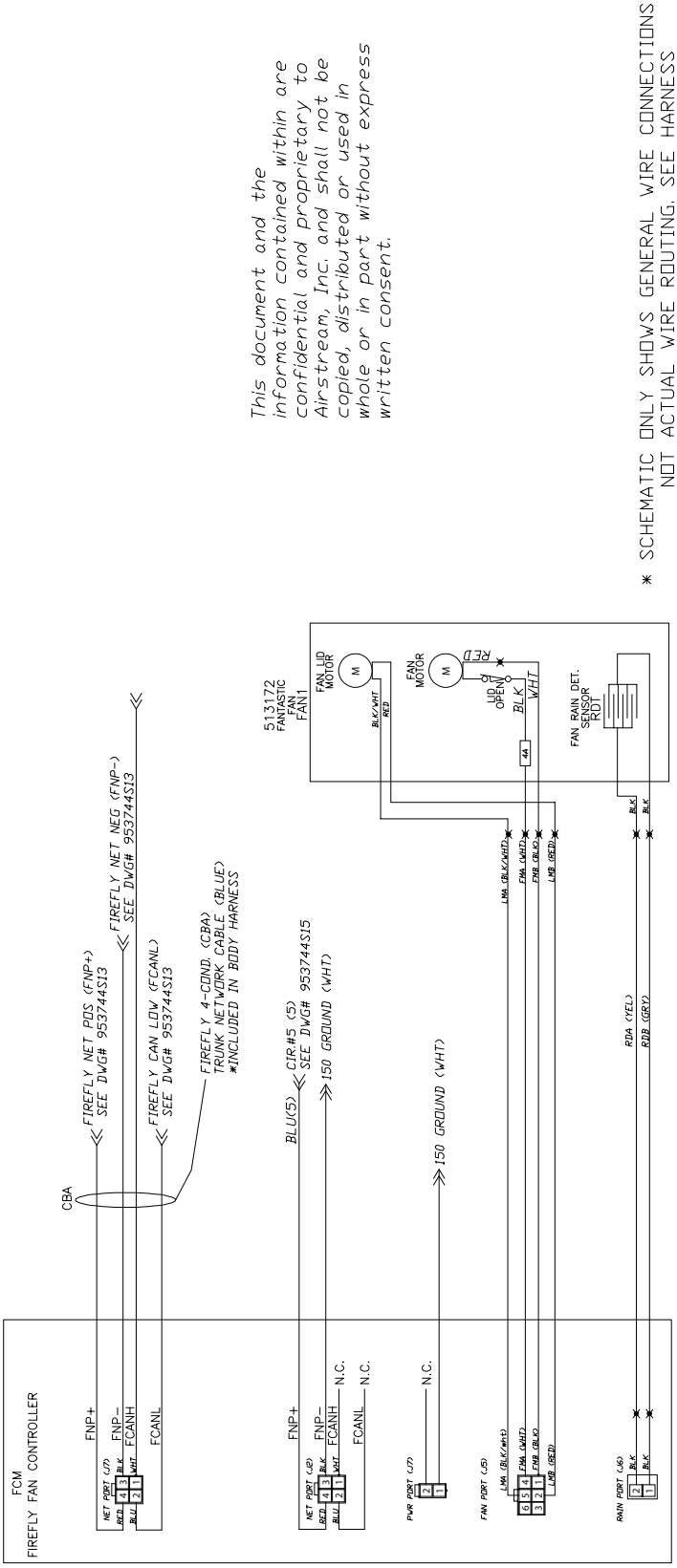

30 Amp 120 Volt Schematic

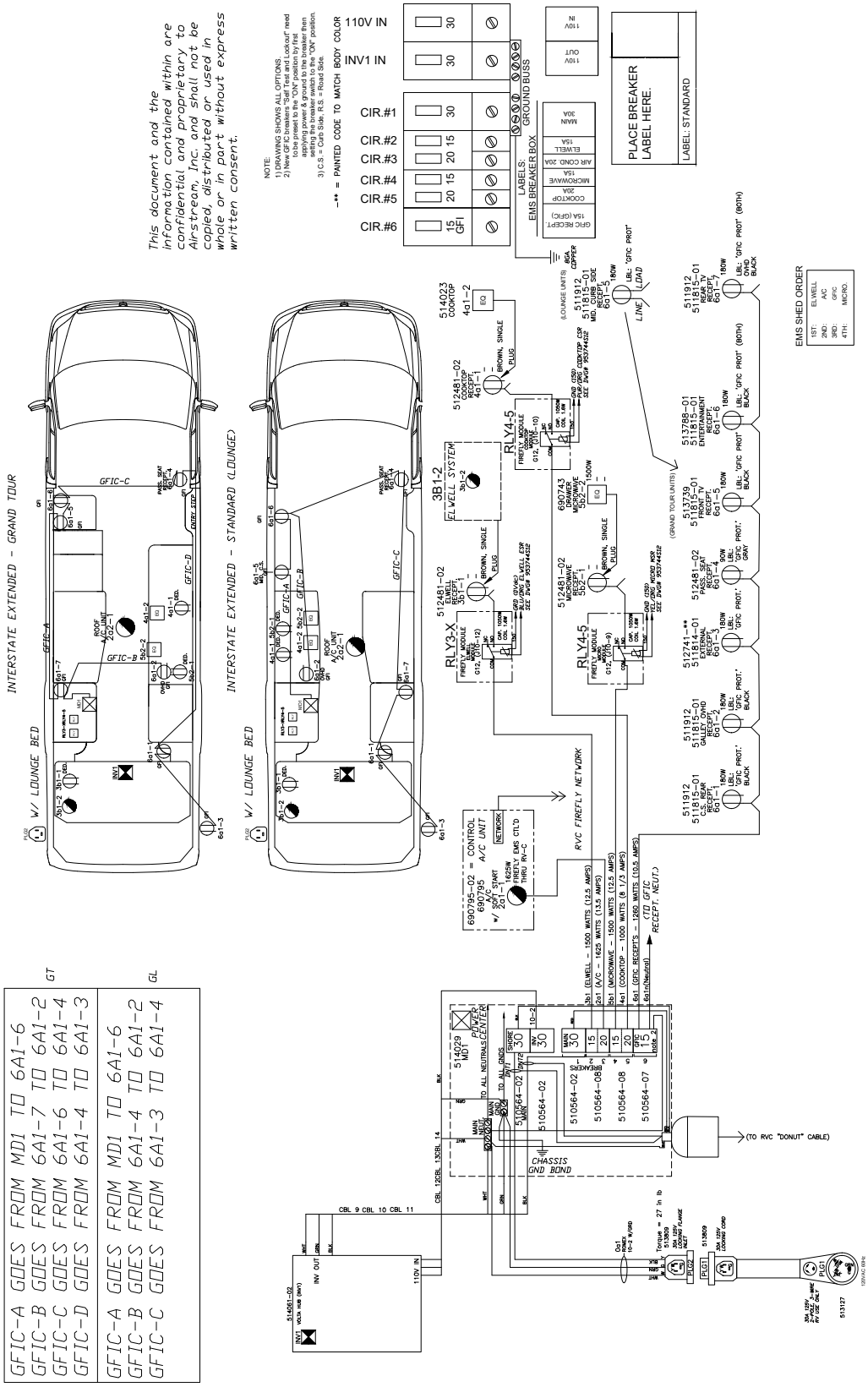

Audio/Video Schematic

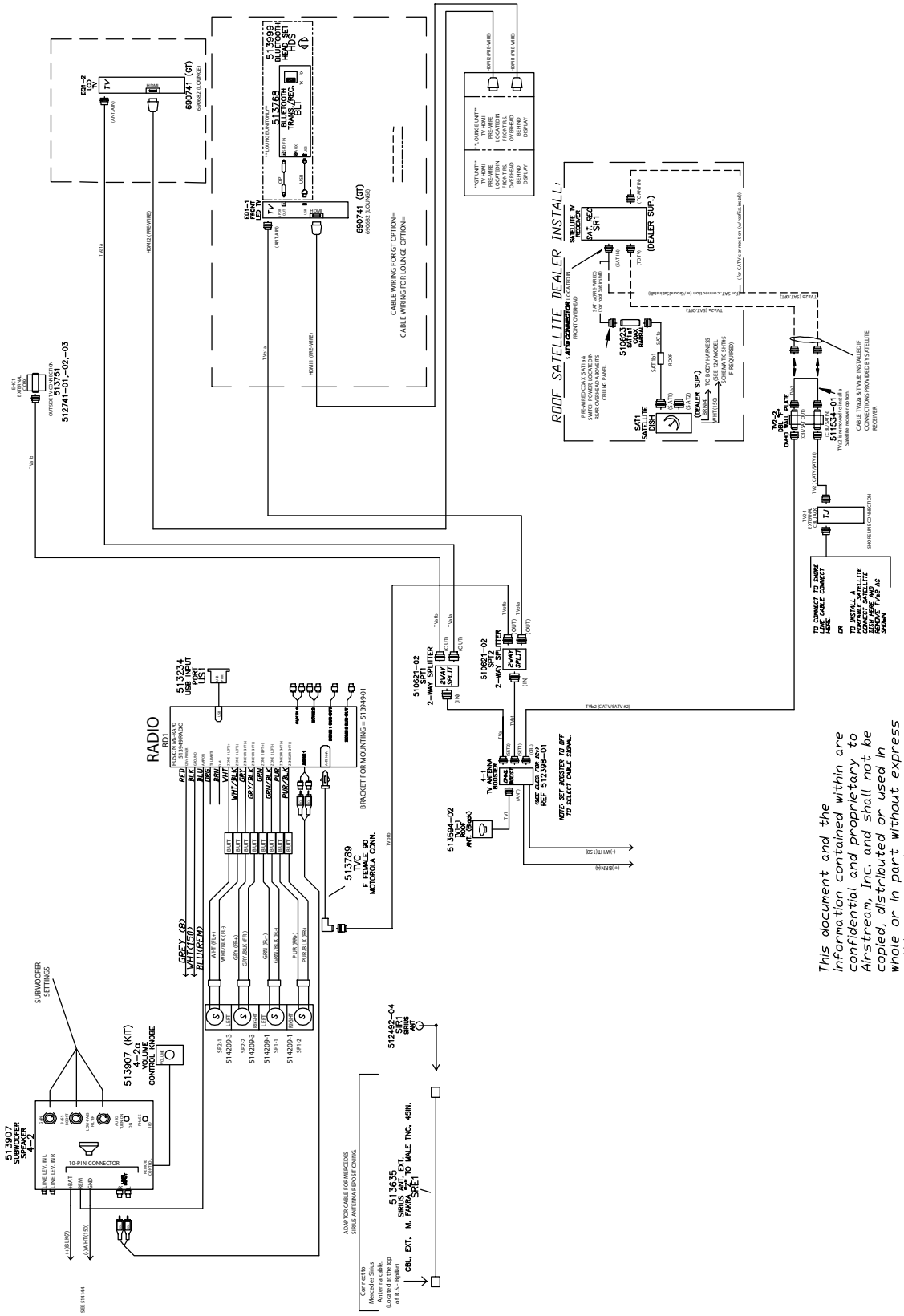

Standard 30 Amp Circuit Breaker Layout

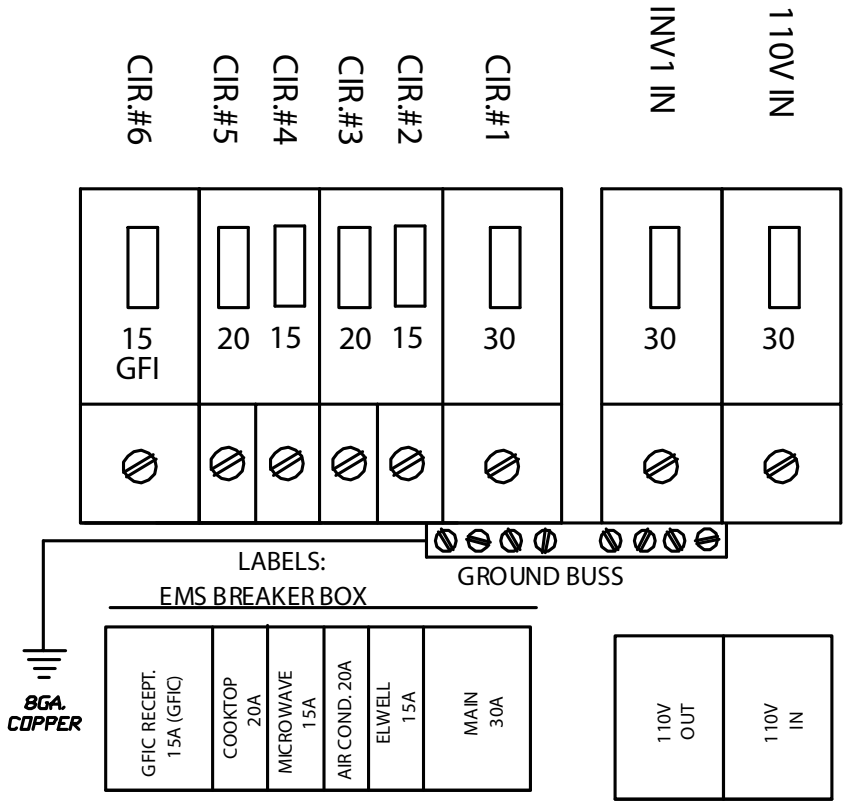

Breaker label content may vary.

Solar Panel Wiring

A manual on the use of the solar system is included with the Airstream Owner's Packet. Please read and understand all information before operating the system.

The charge controller senses the actual battery charge and regulates the charging to prevent over charging. The system requires the 12-volt feed from the battery to operate.

The following diagram depicts the way Airstream wires the solar systems and is the recommended wiring for replacement solar systems.

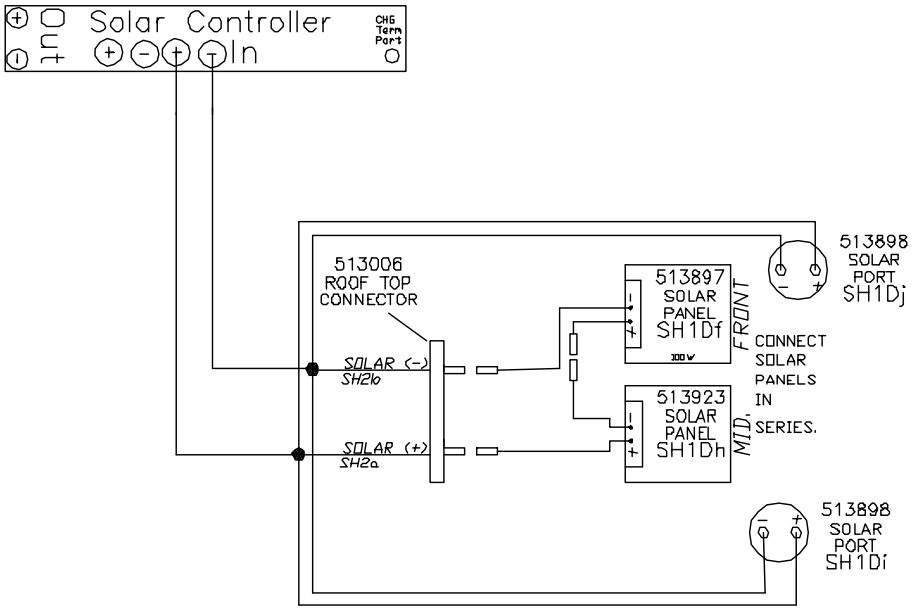

Volta System Limitations

Volta System Temperature Limits

F°	C°	Limit	Description
140	60	Maximum storage temperature	Do not store the pack at or above this tempera ture. Doing so may cause the pack to overheat and may result in a loss of performance and/or a shortened life expectancy.
134.6	57	High temperature fault	Volta System shuts down and does not function above this temperature.
131	55	High temperature warning	Volta System is near the high temperature fault. SOC gauge may flash yellow or an indicator may appear on the touchscreen.
125.6	52	High temperature fault recovery	If the pack reaches the high temperature fault limit (134.6°F or 52°C), the Volta System will not restart until it cools below this temperature.
116.6	47	Too hot to charge	Above this temperature, the Volta System powers devices, but the System will not charge, even if connected to shore power.
109.4	43	Too hot to charge recovery	If the pack reaches the too hot to charge temperature (116.6°F or 47°C), the Volta System will not allow charging again until it cools to this temperature.
68	20	Heating control off temperature	At this temperature, the pack heating control turns off if previously on.
59	15	Heating control on temperature	When the pack is below this temperature, the pack heating control is on to actively warm the pack.
42.8	6	Too cold to charge recovery	If the pack reaches the too cold to charge temperature (37.4°F or 3°C), the Volta System will not allow charging again until it reaches this temperature.
41	5	Low temperature warning	Volta System is near the too cold to charge limit. SOC gauge may flash blue or an indicator may appear on the touchscreen.
37.4	3	Too cold to charge temperature	Below this temperature, the Volta System powers devices, but the System will not charge, even if connected to shore power.
-4	-20	Low temperature fault	Volta System shuts down and does not function below this temperature.

The values listed in this table represent approximate values that may vary by system specification, application, and environmental conditions.

Volta System Temperature Ranges

F° (C°)	Range	Description
-4°F to 140°F (-20°C to 60°C)	Safe Storage Range	The pack may be stored within this range. At certain temperatures within this range, Volta System functionality may be prevented.
37.4°F to 116.6°F (3°C to 47°C)	Charging Range	Within this temperature range, the Volta System accepts charge and has full functionality.
-4°F to 134.6°F (-20°C to 57°C)	Discharging Range	Within this temperature range, the Volta System turns on and powers devices. Refer to the Charging Range (within this table) to identify the range within the Discharging Range at which the Volta System does not charge.
-4°F to 59°F (-20°C to 15°C)	Heating Control On Range Shore Power	If equipped with internal heating pads, the Volta System's heating control is on to actively warm the pack when connected to AC power (shore power) and within this temperature range.
-4°F to 42.8°F (-20°C to 6°C)	Heating Control On Range	If equipped with internal heating pads, the Volta System's heating control is on to actively warm the pack when within this temperature range.

The values listed in this table represent approximate values that may vary by system specification, application, and environmental conditions.

Fresh Water Layouts

Interstate GL

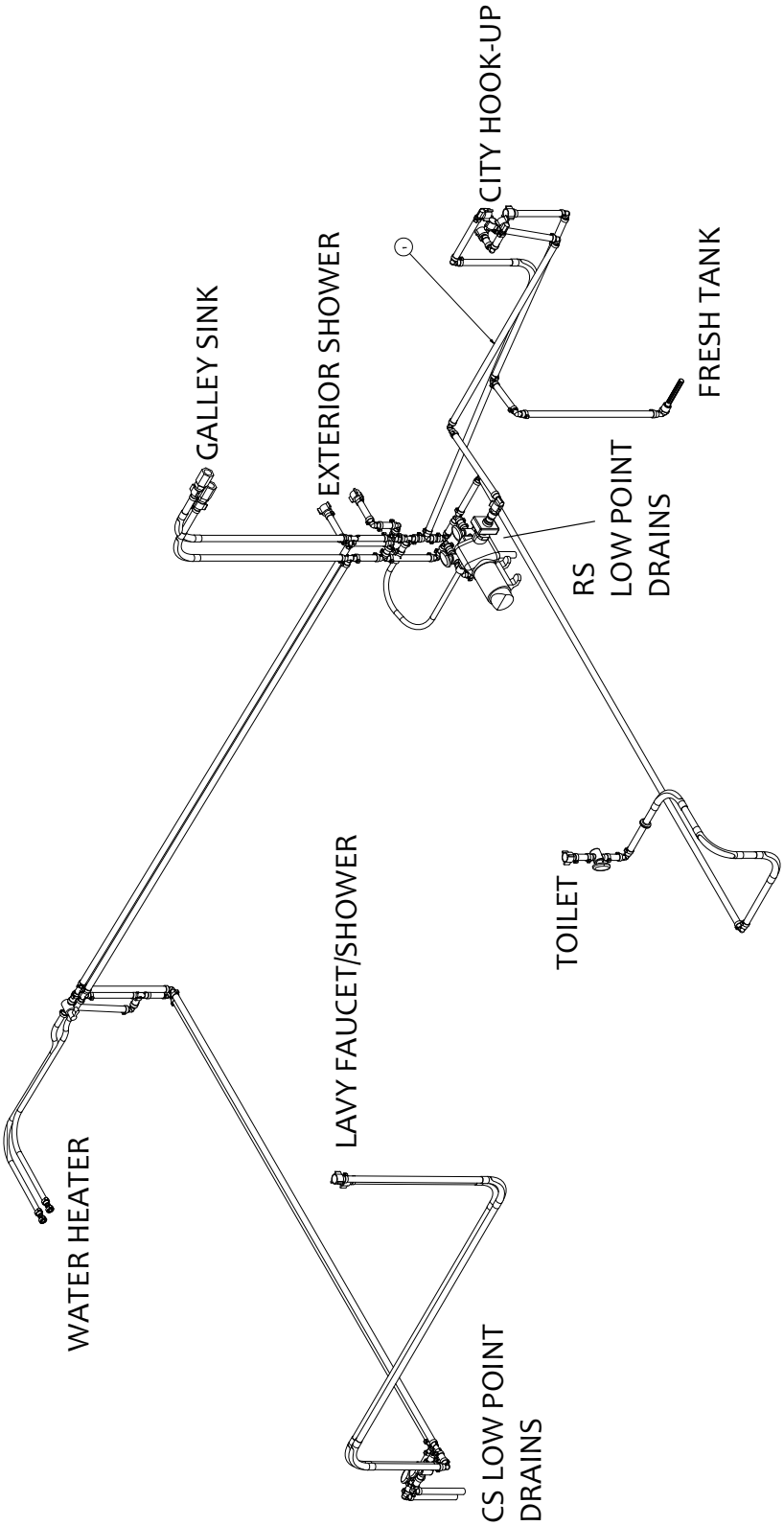

Interstate GT

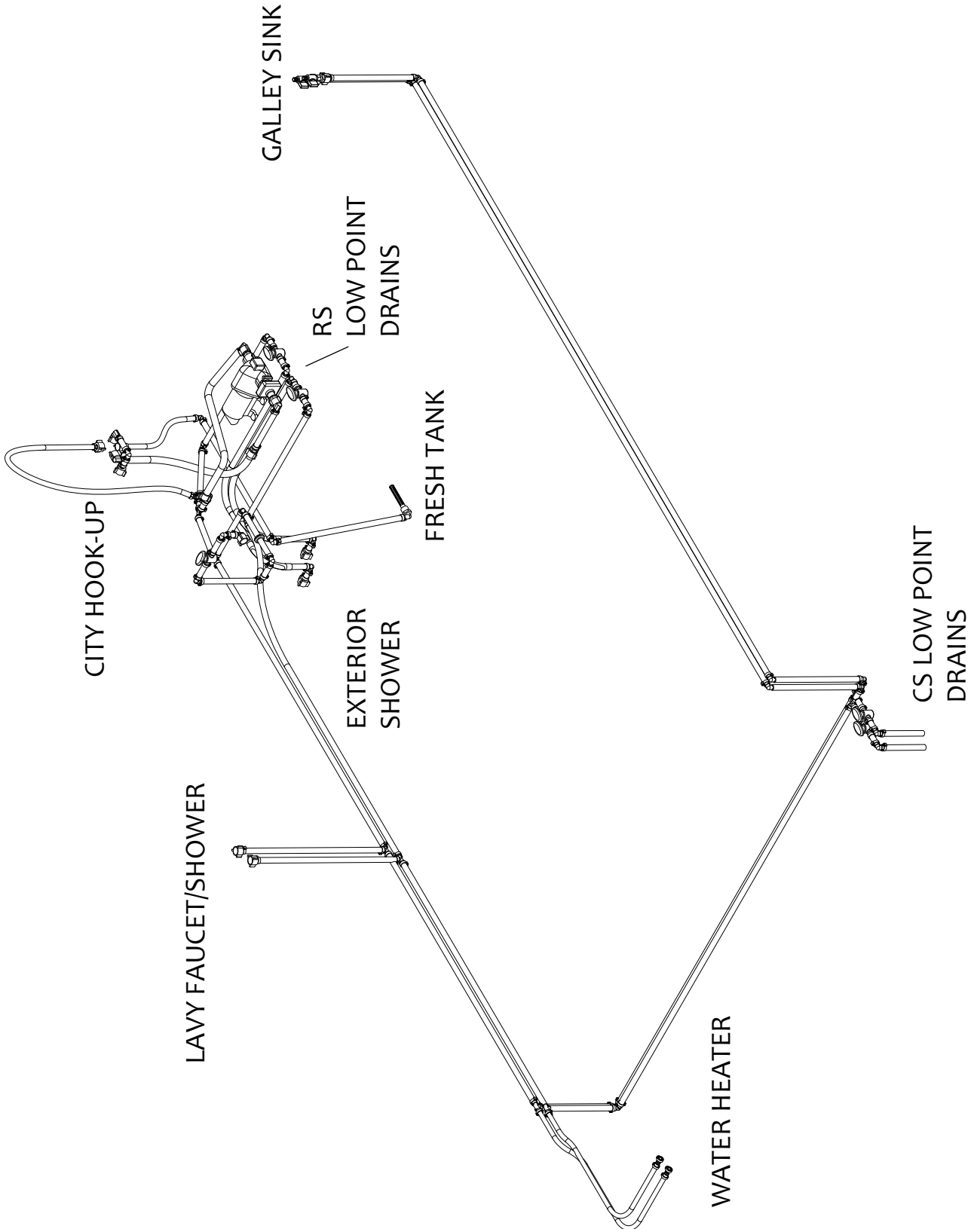

Drain Valve Locations (GL)

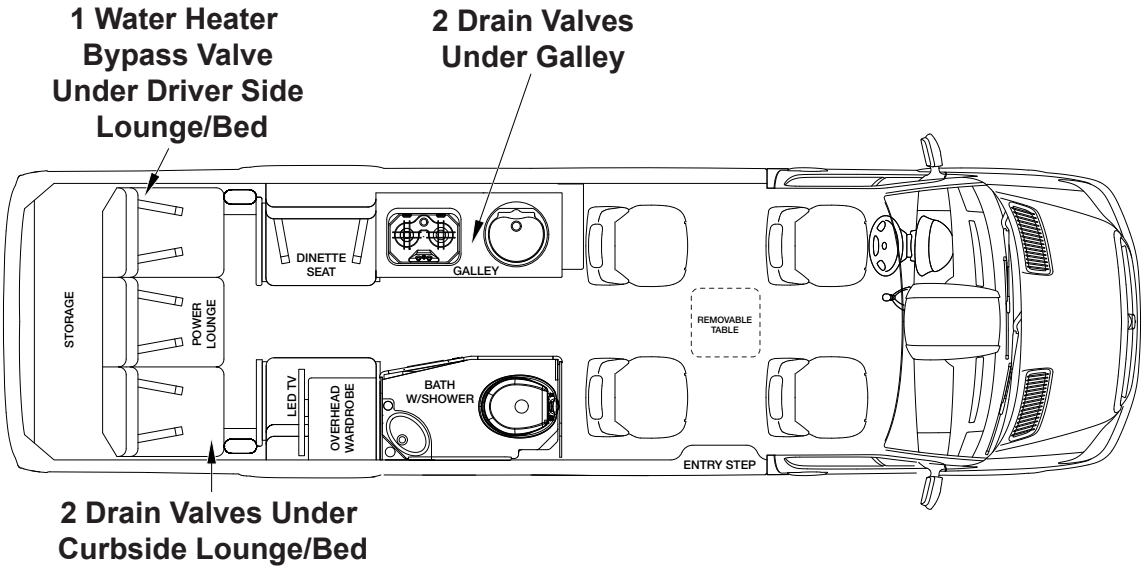

The fresh water system has four fresh water line low point drain valves. There are two under the galley, accessed by removing the drawer below the microwave. Two are located under the lounge, on the curbside, accessed by removing the cup holders. The cup holders lift up and out of the armrest. The water heater bypass valve is located under the lounge on the drivers side.

The fresh water tank drain plug is located on the front of the tank pan under the touring coach.

Drain Valve Locations (GT)

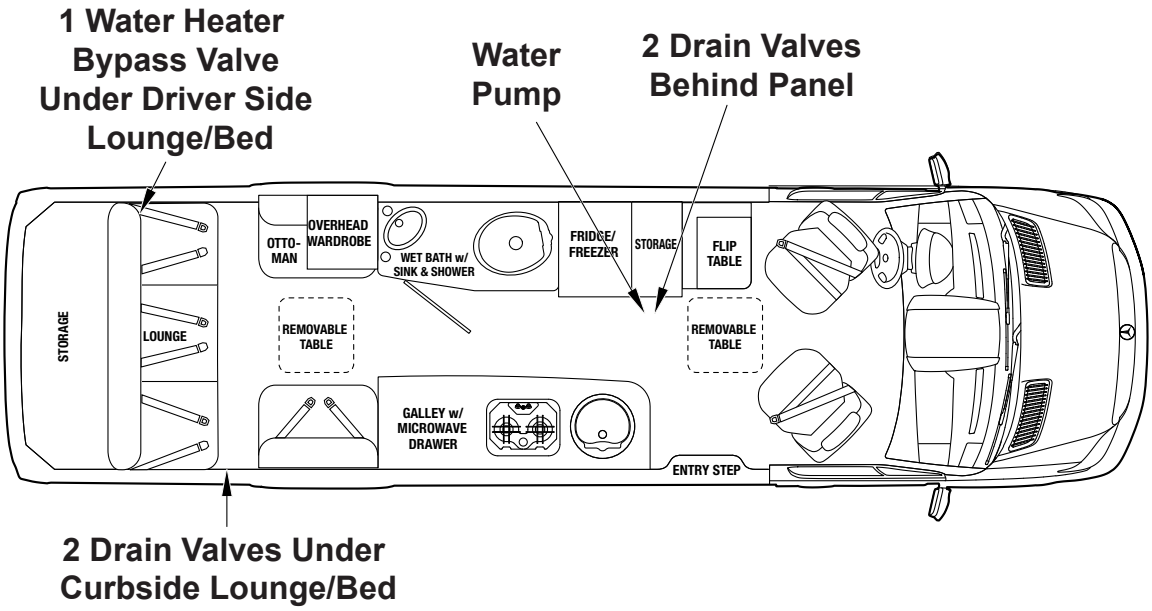

The fresh water system has four fresh water line low point drain valves. There are two below the refrigerator, accessed by removing the vent below the refrigerator. These drain valves are also the exterior shower water lines and the shower hose must be attached to drain. Two are located under the curbside lounge or bed, depending on the model, accessed by removing the cup holders or lifting the mattress. The cup holders lift up and out of the armrest. The water heater bypass valve is located under the lounge or bed on the drivers side.

FAQs and Answers

Electrical

1. Why is the Battery Power On/Off Button flashing a color?

Answer: There are several different flash codes that may be displayed; see Pushbutton LED Flash Codes on page 5-12.

2. What size battery is in my Airstream Interstate?

Answer: Your Airstream has a 12 Volt, 12,000 watt-hour (12 kilowatt-hour) Volta Flex System Lithium-ion battery pack; see Power System Overview on page 5-11.

3. My house battery is dead and I am no where near a shoreline power source, what can I do?

Answer: The engine is equipped with a 58 Volt secondary alternator that will charge the house battery pack simply by driving. In fact, it is the fastest way to charge your house battery; see Charging via Secondary Alternator on page 5-16

4. Why won't my battery charge?

Answer: There are several reasons your battery might not charge; see Reasons the System will not Charge on page 5-17.

5. What sort of temperature limits can my house battery be subjected to?

Answer: There are several things to consider with regard to operating temperatures, and temperatures at which you can charge the battery; see Power System Temperature Limits on page 5-17.

6. What is the Battery Power On/Off Pushbutton (battery disconnect) switch function?

Answer: The switch is used to cut power when the Interstate is not being used or put into storage to preserve battery charge. It disengages or engages the 12-volt power supply from the house battery to everything but the Smoke alarm/CO detector; see Battery Power On/Off Pushbutton on page 5-12.

7. Do you recommend using a surge protector when plugged into shore power?

Answer: Your Airstream is breaker protected. However, with the use of more personal electronic devices and the number of motorhome users in parks, added protection is always a plus. If you are having trouble charging your house battery, remove the surge protector.

8. What is my inverter powering?

Answer: It is powering all appliances (air conditioning, microwave, etc.) and all outlets/receptacles. Your inverter is actually an inverter/charger, and it performs multiple functions; see Inverter/Charger on page 5-11.

9. I have an alarm going off at my sliding door.

Answer: Make sure your step and awnings are completely closed. If either of these are not properly closed, and the engine is running, it will cause the alarm to sound.

Plumbing

1. Do I need a water regulator?

Answer: No, your Airstream is equipped with a built in regulator rated for 100 psi. However, when using air for winterization, never exceed 50 psi., the 100 psi rating is only for the Water Management Panel valve; see Water Management Panel on page 6-8.

2. How do I get fresh water into my Interstate?

Answer: To fill the tank, hook up to a city water supply, set the Water Management Panel selector to "Tank Fill" and fill the fresh water tank from the pressurized city water source; see Water Management Panel on page 6-8.

3. What is the difference between a Gray Water tank and the Black Water tank?

Answer: The Gray Water tank holds water from shower and sink drains. The Black Water tank holds sewer water from the toilet.

4. Can I run the macerator pump if there is no water going through it?

Answer: No, it will burn the macerator up if it is run dry for more the 10-30 seconds. Also, you should not run it more than 15 minutes continuously.

5. How do I use my Black Water tank flush?

Answer: First, empty your Black Water tank, and then close your Black Water tank valve. Hook up your hose to the external hookup, run water through for a couple minutes, and then open the valve. Turn macerator pump on to empty the tank. Do this a couple times until the tank is clear. (Do not run macerator pump if tank is empty.)

6. My Gray Water valve will not open while I have the Black Water valve open.

Answer: True, you can only have one valve open at a time.

Audio-Video

1. My TV reception is poor. What can I check?

Answer: Verify if your antenna booster is set to proper selection (On- for antenna and Off- for cable satellite). You should also make sure connections are tight on your TV.

2. Will my TVs operate while traveling down the highway?

Answer: Yes. Press the Battery Power On/Off pushbutton to turn on the Volta system, navigate to the Inverter Screen on the Volta display, turn on the inverter, and the front and rear TVs will operate; see Inverter/Charger Screen on page 5-14.

3. Will the rear TV at the lounge play through the head phone jacks?

Answer: No, only the front TV will play through the jacks if the speaker switch is turned off behind it.

4. Does the TV play through the dash stereo?

Answer: No, the TV's audio is not connected to the dash radio.

Chassis

1. Where is my spare tire located?

Answer: A spare tire is not supplied with the touring coach.

2. How do I jack the touring coach up to change a tire?

Answer: Please refer to the Mercedes owner's manual.

3. Where can I find my Interstate's serial number?

Answer: A label is attached on the driver's side B-pillar or the passenger's door. This label will also provide the inflation pressure of the tires and weight specifications.

Appliances

1. I am planning for a trip in my Airstream. How should I get the refrigerator cooled down?

Answer: The best practice would be to connect the shoreline to a home outlet and turn the Volta System on. This way the battery is charging while the refrigerator cools down. Set the thermostat between 3 and 4. You can make further adjustments to suit your personal requirements after the box has cooled down. Allow the refrigerator to come down to temperature before loading with product. Setting the thermostat to a higher setting, e.g. 7, will not decrease the time required for the unit to cool down to its normal operating temperature. AC/DC units cool at the same rate on DC as on AC. Normal refrigerator operating temperatures are 34ºF to 40ºF.

2. If I'm driving to my destination, will my refrigerator stay on?

Answer: If you press the Battery Power On/Off pushbutton, and turn ON the Volta System, yes.

3. My air conditioner freezes up. What is the problem?

Answer: In high humidity conditions, the AC manufacturer recommends you operate your AC (manual mode) on the high fan setting and all vents should be open to have maximum air flow over the coils; this helps reduce icing. Also, dirty AC filters can restrict air flow and cause the AC to ice up.

Maintenance

1. Can I have my awning out with heavy winds?

Answer: No this may cause damage if it is too windy. However, the awning does have a built in sensor that will automatically retract the awning.

2. I want to clean the exterior of my Airstream. What do you suggest?

Answer: Airstream recommends washing the Interstate using a mild, auto detergent, safe for clear coated surfaces. Airstream recommends washing based on operating conditions, and waxing a minimum of twice a year. Any automotive wax designed specifically for clear coated surfaces will provides good wax protection.

NOTES

Index

A

Air Conditioner 5-22
Air Ride Suspension 7-9
Alarms and Detectors 2-3
Alternator 5-11
Appliances 5-22
  Air Conditioner 5-22
  Cooktop 5-22
Awning 6-11

B

Backing Up 8-8
Battery 5-15
  Charging via Secondary Alternator 5-16
  Charging via Shoreline Connection 5-15
  Reasons the System will not Charge 5-17
  Recovery from a Zero State-of-Charge 5-16
Battery Management System 5-11
Battery Power On/Off Pushbutton 5-12
Black Water Tank Flush 9-10
Brake Controller 8-7

C

Camping 3-7
Carbon Monoxide 2-5
Carbon Monoxide Detector 2-3
Ceiling Vent Fan 5-22
Chemical Sensitivity 2-2
Circuit breakers 5-7
  GFCI 5-8
City Power 5-9
Cleaning
  Exterior 6-2
  Interior 5-3
Cooktop 5-22
Cordset 6-10

D

DC-DC Converter 5-11
Diesel Exhaust 2-7
Diesel Operated Systems 2-2
Drain System 3-10

E

Effects of Prolonged Occupancy 3-8
Electrical 5-7
Electrical Diagrams 9-15
Electrical System Operation 5-11
Emergency Exit 2-8
EMS 5-9
Energy Management System 5-9
Entertainment Systems 5-20
Exhaust Vent 5-23
Extended Stay 3-8
Exterior Components 6-4
Exterior Shower 6-9

F

Fan 5-22
FAQs 9-34
Faucets 5-5
Fire Extinguisher 2-7
Floor Plans 4-2
Formaldehyde 2-2
Fuel 7-2

G

Garmen Vieo 5-20
GFCI 5-8

H

Heated Tanks 3-11
Heating 5-24
Hitch Cover 6-11
Hot Water 5-24
Hydronic Heating and Hot Water System 5-24

I

Inverter/Charger 5-11
  Inverter/Charger Screen 5-14

J

Jack 7-6

L

Leveling System 6-10
Lighting 5-19
Loading 8-2

M

Macerator Pump 9-8
  Winterizing 9-12
Maintenance Schedule 9-2
Microwave Ovens 5-25
Mold 2-2
  About Molds 3-9
Monitor Panel 5-18
Multiplex 3-8, 3-11, 5-6, 5-9, 5-18, 5-19, 5-22, 7-3, 9-6, 9-8
Multiplex System 5-18

O

Overnight Stop 3-7

P

Passing 8-9
Plumbing 9-6
Power Center 5-7
Power Shades 5-6

R

Refrigerator 5-25

S

Safety 2-2, 2-8, 8-4
Sanitizing 9-7
Satellite Antenna 5-21
Screen Doors 6-13
Service 3-6
Shades 5-6
Shoreline Power Inlet and Cordset 6-9
SmartPlug 6-9
  Cordset 6-10
  Inlet 6-9
Smoke Alarm 2-3
  Maintenance of Smoke/CO Detector 2-6
Solar System 5-10
Specifications 4-3
Sprinter Information 7-2
State-of-Charge 5-13
Step 6-9
Storage 5-5

T

Table 5-6
Tank heaters 3-11
Tire Care 9-5
  Inflation Pressure 4-3
  Proper Tire Inflation 7-3
  Tire Size 4-3
Toilet 5-4, 9-14
Towing a Boat 8-7
Towing a Trailer 8-6
Towing Your Touring Coach 8-9
Trailer Hitches 8-5

V

Vent 5-23
Ventilation 2-2, 2-3
Volta 5-11
  Battery Management System 5-11
  Battery Power On/Off Pushbutton 5-12
  Flex Pack 5-11
  State-of-Charge 5-13
  Storage 9-12
  System Temperature Limits 9-29
  Temperature Limits 5-17
  Temperature Ranges 9-30
  Volta Flex System Component Functions 5-12
  Volta Touchscreen Display 5-12

W

Warranty 3-2
  Obtaining Warranty Service 3-4
Waste System 9-8
Waste Water System 3-10
Water Heater 5-24
  Winterizing 9-12
Water Management Panel 6-8
Water Pump and Strainer 9-6
Weighing 8-2
Weight Distribution 8-3
Winterizing and Storage 9-10
Winter Traveling 3-11

“Wherever you camp, wherever you stay, leave it cleaner than when you arrived. Not just as clean, but cleaner.” – Wally Byam

At Airstream, we take environmental awareness seriously, and we’ve made it our mission to Leave it Beautiful. That phrase is not just a marketing campaign – it’s a reminder that together we can make a difference. Leave it Beautiful is a call to action to pick up the litter, toss it in a can, and not simply step over it and pass it by. Your purchase of a new Airstream will open doors to new experiences and places you’ve only dreamed of – but it takes all of us working together to ensure those places remain pristine, accessible, and ready for the next adventure.

JOIN AIRSTREAM IN A COMMUNITY EFFORT TO

leave it beautiful™

brought to you by AIRSTREAM

AIRSTREAM®

428 West Pike Street
P.O. Box 629
Jackson Center, OH. 45334-0629
Phone: (937) 596-6111 Fax: (937) 596-7939
www.airstream.com