AIRSTREAM®

SCAN ME

#liveriveted®

2024 BAMBI

Bambi®

Owner's Manual

User Guide Videos and Airstream Academy

Scan the QR code on the cover or visit https://support.airstream.com to view model-specific User Guide Videos that explore topics discussed in this manual. Visit Airstream Academy at https://www.airstream.com/academy/ to learn the ins and outs of Airstreaming by exploring videos, articles, and frequently asked questions covering a wide range of popular RV topics.

Disclaimer And Copyright

All information, illustrations and specifications contained in this manual are based on the latest product information available at the time of publication approval. If and when new materials and production techniques are developed that can improve the quality of its product, or material substitutions are necessary due to availability, Airstream reserves the right to make such changes.

Airstream Bambi Owner's Manual

©2023 Airstream, Inc. All rights reserved

Publication Date: August 2023

REV# 02

AIRSTREAM®

TABLE OF CONTENTS

INTRODUCTION 1-1

SAFETY 2-1

- Safety Precautions 2-2
- Chemical Sensitivity and Ventilation 2-2
- Alarms and Detectors 2-3

GENERAL INFORMATION 3-1

- Limited Warranty Policy 3-2
- Service 3-6
- Camping 3-7

FLOOR PLANS AND SPECIFICATIONS 4-1

- Floor Plans 4-2
- Specifications 4-3

INTERIOR 5-1

- General Information and Cleaning 5-3
- Plumbing 5-5
- Electrical 5-7
- Entertainment Systems 5-11
- Appliances 5-12

EXTERIOR 6-1

- Cleaning 6-2
- General Information and Operation 6-3

TOWING 7-1

- Tow Vehicle 7-2
- Brakes 7-2
- Loading 7-3
- Hitching Up 7-4
- Towing Tips and Information 7-5

MAINTENANCE 8-1

- Maintenance Schedule 8-2
- Suggested Maintenance and Replacement Parts 8-3
- Tires 8-5
- Power Jack 8-9
- Batteries 8-10
- Water Pump 8-12
- Fresh Water Tanks and Draining 8-12
- Black and Gray Water Tank Draining 8-14
- Winterizing and Storage 8-15
- Main Door Care 8-17
- Windows 8-17
- Electrical Diagrams 8-18
- Fresh Water Layouts 8-28
- FAQs and Answers 8-32

NOTES

AIRSTREAM®

Section 1
INTRODUCTION

The Owner's Manual for your new Airstream trailer is designed to respond to the most frequent inquiries regarding the operation, function, and care of the many systems that make modern trailering a joy.

Airstream realizes our customers possess varying degrees of expertise in the area of maintaining and repairing the appliances in their trailer. For this reason, the service information found in this manual is directed toward those with average mechanical skills.

We also realize that you may be more familiar with one area than you are with another. Only you know your capabilities and limitations. We want you to use this manual and hope you will find the information contained in it useful. However, should you ever feel that you may be in need of assistance, please consult your Airstream dealer for advice on service that may be required.

A brief explanation of the operation of the appliances such as refrigerator, furnace, water heater, and others, are explained in this manual. However, you will also find the manufacturer's information, supplied in a packet included with this manual, to be more detailed.

All information, illustrations, and specifications contained in this manual are based on the latest product information available at the time of publication approval. If and when new materials and production techniques are developed that can improve the quality of its product, or material substitutions are necessary due to availability, Airstream reserves the right to make such changes.

Optional items may be available on all, or particular models. Additionally, some optional items can only be included during the manufacturing phase and cannot later be added to the trailer.

The inclusion of optional items information in this manual does not imply or suggest the availability, application, suitability, or inclusion for any specific unit.

Airstream uses the ⚠ safety alert symbol and signal words Danger, Warning, and Caution to alert you to potential personal injury hazards. Obey all safety messages that follow this symbol to avoid possible injury or death. The following are examples of each type of signal word, safety message, and information message found throughout this manual.

⚠ DANGER

Indicates a hazardous situation which, if not avoided, will result in death or serious injury.

⚠ WARNING

Indicates a hazardous situation which, if not avoided, could result in death or serious injury.

⚠ CAUTION

Indicates a hazardous situation which, if not avoided, could result in minor or moderate injury.

NOTICE

Indicates a potential situation which, if not avoided, may result in damage to your Airstream. Addresses practices not related to personal injury.

NOTE

Provides noteworthy information and tips about your Airstream.

AIRSTREAM®

Section 2
SAFETY

SAFETY PRECAUTIONS 2-2
- Transporting of Passengers 2-2
- Towing and Weight Distribution. 2-2
- Controlling Sway 2-2
- Lug Nut Torquing 2-2
- Tire Safety 2-2
- Appliances and Equipment 2-2
- Mold 2-2

CHEMICAL SENSITIVITY AND VENTILATION . . 2-2
- Chemical Sensitivity 2-2
- Formaldehyde 2-3
- Ventilation 2-3
- Do Not Smoke 2-3
- Medical Advice 2-3

ALARMS AND DETECTORS 2-3
- Smoke Alarm. 2-3
- Liquid Propane Gas (LPG)/Carbon Monoxide (CO) Detector 2-4
  - Low Voltage 2-4
  - Detector Test 2-4
  - This Carbon Monoxide Detector Is Not . . 2-5
  - Important Safety Precautions 2-5
- What Is Carbon Monoxide 2-5
  - Conditions that can result in potentially dangerous CO situations 2-6
- Symptoms of Carbon Monoxide Poisoning . . 2-6
- Basic Rules For LPG Safety 2-6
  - If You Smell Gas 2-7
- Fire Extinguisher 2-7
- Safety 2-7

Safety Precautions

Many things can be construed as safety related, but the most important is your common sense. If you are careless with matches, cigarettes, flammable material, or any other hazardous material, you surely realize your potential for accidents is greatly increased.

You will find many safety recommendations in this section and throughout the manual. The following recommendations are the ones we consider to be the most important.

Transporting of Passengers

The transporting of people in the trailer puts their lives at risk and may be illegal. The trailer does not have seat belts, therefore, it is not designed to carry passengers.

Towing and Weight Distribution

Weight distribution is an important factor when loading your travel trailer. A recreational vehicle with the cargo distributed properly will result in efficient, trouble-free towing; see Loading on page 7-3.

Controlling Sway

Sway or fishtailing is the sideways action of a trailer caused by external forces. Excessive sway of your travel trailer can lead to the rollover of the trailer and tow vehicle, resulting in serious injury or death; see Controlling Sway or Fishtailing on page 7-7.

Lug Nut Torquing

Making sure wheel mounting nuts (lug nuts) on trailer wheels are tight and properly torqued is an important responsibility that trailer owners and users need to understand and practice. Inadequate and/or inappropriate wheel nut torque (tightness) is a major cause of lug nuts loosening in service. Loose lug nuts can rapidly lead to a wheel separation resulting in potentially serious safety consequences; see Lug Nut Torquing on page 8-8.

⚠ WARNING

Use a torque wrench to tighten lug nuts. Tightening by hand or with an impact wrench is not recommended. For lug nut torque values, see Specifications on page 4-3

Tire Safety

Properly maintained tires improve the steering, stopping, traction, and load-carrying capability of your vehicle; see Tire Care on page 8-6. Also, be sure to read the Tire Safety Manual Addendum included with your owner's packet.

Appliances and Equipment

The appliances (stove) and equipment (hot water heater, furnace, etc.) typically operate on LP gas. LP gas is flammable and is contained under high pressure. Improper use may result in a fire and/or explosion. Make sure to follow all instructions and warnings in this manual as well as those in the specific owner's manuals of the appliances and equipment.

NOTE

For additional LPG warnings and safety information, see Section 5 and Section 6.

Mold

Mold and mold spores exist throughout indoor and outdoor environments. There is no practical way to eliminate all mold and mold spores in the indoor environment, however, the way to control indoor mold growth is to control moisture; see Inhibiting Mold Growth on page 3-10.

Chemical Sensitivity and Ventilation

Chemical Sensitivity

Immediately after the purchase of your new recreational vehicle, and sometimes after it has been closed up for an extended period of time, you may notice a strong odor and/or experience a chemical sensitivity. This is not a defect in your recreational vehicle. Like your home, there are many different products used in the construction of recreational vehicles, such as carpet, linoleum, plywood, insulation, upholstery, etc. Formaldehyde is also the by-product of combustion and numerous household products, such as some paints, coatings, and cosmetics. However, recreational vehicles are much smaller than your home and therefore, the exchange of air inside a recreational vehicle is significantly less than in a home. These products, when new or when exposed to elevated temperatures and/or humidity, may off-gas different chemicals, including formaldehyde. This off-gassing, in combination with the minimal air exchange, may cause you to experience irritation of the eyes, nose, and throat and sometimes headache, nausea, and a variety of asthma-like symptoms. Elderly persons and young children, as well as anyone with a history of asthma, allergies, or lung problems, may be more susceptible to the effects of off-gassing.

Formaldehyde

Formaldehyde is a naturally occurring substance and is an important chemical used widely by industries to manufacture building materials and numerous household products. It is also a by-product of combustion and certain other natural processes. Thus, it may be present inside the trailer and some individuals may be sensitive to it. Ventilation of the unit normally reduces the exposure to a comfortable level.

Trace levels of formaldehyde are released from smoking, cooking, and use of soaps and detergents, such as carpet shampoos, cosmetics, and many other household products. Some people are very sensitive to formaldehyde while others may not have any reaction to the same levels of formaldehyde. Amounts released decrease over time.

Your Airstream trailer was manufactured using low formaldehyde-emitting (LFE) wood products, use of which is typical in the recreation vehicle industry. Formaldehyde has an important role in the adhesives used to bind wood products used in recreation vehicles. The wood products in your trailer are designed to emit formaldehyde at or lower than industry guidelines and should not produce symptoms in most individuals.

While LFE wood products typically do not emit formaldehyde at a level that would cause symptoms in most individuals, it is possible, though not likely, for that to occur when the trailer is not properly ventilated. Ventilation is an essential requirement for trailer use, for many reasons. Any effects of formaldehyde can be greatly reduced by actions such as opening windows, opening roof vents, running the air conditioner, or some combination thereof. In addition, the emission of formaldehyde by these products naturally decreases rapidly over time.

Airstream strongly suggests you take measures to properly ventilate your trailer on a regular basis. If you have any questions with respect to proper ventilation of your trailer, please do not hesitate to contact your Airstream dealer.

Ventilation

To reduce or lessen exposure to chemicals from off-gassing, it is of utmost importance that you ventilate your recreational vehicle. Ventilation should occur frequently after purchase and at times when the temperatures and humidity are elevated. Remember, off-gassing is accelerated by heat and humidity.

Open windows, exhaust vents, and doors. Operate ceiling and/or other fans, roof air conditioners, and furnaces, and use a fan to force stale air out and bring fresh air in. Decreasing the flow of air by sealing the recreational vehicle increases the formaldehyde level in the vehicle's indoor air.

Do Not Smoke

It is recommended you do not smoke inside your recreational vehicle. In addition to causing damage to your recreational vehicle, tobacco smoke releases formaldehyde and other toxic chemicals.

Medical Advice

Questions regarding the effects of formaldehyde on your health should be submitted to your doctor or local health department.

Alarms and Detectors

Smoke Alarm

A smoke alarm is provided with your trailer. A manual pertaining to the alarm is included in the paper work given to you at the dealership. Please read and follow all care, maintenance, and safety information contained in the smoke alarm manual.

The smoke alarm will beep once a minute for at least 30 days when the battery is weak. The battery must immediately be replaced with a fresh one.

⚠ WARNING

Alarm battery is shipped deactivated. Check your alarm for proper battery installation. To activate battery, new Airstream owner's must install included battery to proper orientation.

⚠ WARNING

Smoke alarms have a limited life. The unit should be replaced immediately if it is not operating properly. You should always replace a smoke alarm after 10 years from the date of purchase. Write the purchase date on the space provided on the back of unit.

If service is required or you have not received a smoke alarm user's manual, please contact the manufacturer, your dealer, or Airstream Customer Service.

Liquid Propane Gas (LPG)/Carbon Monoxide (CO) Detector

This detector has a five-year life; see end-of-life notification in the detectors manual. Please read the entire detector manual before operating the unit.

⚠ WARNING

Activation of your Carbon Monoxide alarm's audible horn indicates the presence of Carbon Monoxide that can kill you. Leave the area immediately!

⚠ WARNING

Failure to replace this product by the "REPLACE BY DATE" printed on the alarm may result in death by Carbon Monoxide poisoning. Replace By Date is five (5) years from the date of manufacture.

The LPG/CO detector is located in the galley area. LPG is a mixture of gases produced and sold commercially as a fuel for heating and cooking appliances. LPG is highly flammable and, as a result, can be explosive if ignited under certain circumstances. LPG is heavier than air and, if confined in a closed space, will accumulate close to the floor. The LPG/CO detector is designed to alarm when propane gas exceeds 10% of the lower-explosive-limit for more than 30 seconds or if CO gas reaches unsafe levels. When propane gas is detected the horn will sound with constant beeps and the red LED will be on. If CO gas is detected the horn will sound with 4 rapid chirps followed by a 4 second pause and the red LED will flash rapidly.

Your LPG/CO detector is wired directly to your trailer battery and incorporates a 1-amp, in-line fuse. It has no internal battery backup. In normal stand-by mode, the LED indicator will be green.

Low Voltage

The operating voltage for the detector is 12 VDC. The actual voltage supplied to the detector in a recreational vehicle may drop below the minimum 8 VDC. The detector provides the user with a low voltage warning before reaching that level and will provide additional distinct, clear warnings and alarms after the 8 VDC level is reached. However, if available power supplied to the unit is below the operating voltage of 8 VDC, the detector will not detect gas or provide protection against dangerous levels of LPG.

⚠ WARNING

If the low voltage warning sounds, the detector will need to be reset by disconnecting the battery, before normal operation will occur.

Detector Test

If the Silence/Test button is pressed while in normal operation, the alarm will perform a self test of the CO sensor, propane sensor and battery voltage. It is recommended to perform a self test weekly, after power up from storage, and before each trip. If the self test passes, the alarm will perform 2 cycles of the CO horn pattern (4 rapid chirps followed by a 4 second pause), followed by 2 cycles of the propane horn pattern (constantly beeping).

⚠ WARNING

Activation of this detector indicates the possible presence of LPG, which can cause an explosion and/or fire, causing serious injury or death. This normally indicates a leak in the LPG installation or an LPG appliance. Extinguish all open flames, open your windows and door, and evacuate the unit immediately. Do not activate any electrical switch. Turn off the LPG at your gas tank(s). Do not re-enter your unit until a qualified repair technician has corrected the problem and certified the system as safe.

⚠ WARNING

Have a qualified technician check your LPG system annually or if you detect any signs of leaks or malfunctions.

NOTE

For additional LPG warnings and safety information, see Section 5 and Section 6.

⚠ WARNING

Airstream recommends shutting off the gas supply at the LPG tanks before refueling the tow vehicle or entering a refueling station.

⚠ WARNING

This product is intended for use in ordinary, indoor locations of family living units. It is not designed to measure compliance with occupational safety and health administration (OSHA) commercial or industrial standards. Individuals who are at special risk from Carbon Monoxide exposure by reason of age, pregnancy, or medical condition may consider using warning devices which provide audible and visual signals for Carbon Monoxide concentration under 30 ppm. If in doubt, consult your medical practitioner.

NOTICE

It is not recommended that the detector be disconnected from the battery during periods of storage. There is a small heater on the sensor of the device that burns away impurities in the air during periods of normal use. During periods when power is interrupted, impurities can build up on the sensor. When power is returned to the detector, the detector alarm may activate until the impurities are burned off. This could take a number of hours, during which time the alarm will be constantly on.

This Carbon Monoxide Detector Is Not

- Designed to detect smoke, fire, or any gas other than Carbon Monoxide.
- To be seen as a substitute for the proper servicing of fuel-burning appliances.
- To be used on an intermittent basis, or as a portable alarm for spillage of combustion products from fuel-burning appliances.

⚠ WARNING

This Carbon Monoxide detector is designed for indoor use only. Do not expose to rain or moisture. Do not knock or drop the alarm. Do not open or tamper with the alarm as this could cause a malfunction. The detector will not protect against the risk of Carbon Monoxide poisoning when the batteries are dead or missing. The alarm will only indicate the presence of CO gas at the sensor. .

Important Safety Precautions

- Carbon Monoxide is produced by the incomplete combustion of fuels such as wood, charcoal, coal, heating oil, paraffin, gasoline, natural gas, propane, butane, etc.
- Ideally, it is recommended that a Carbon Monoxide detector should be installed in or near every room that has a fuel burning appliance such as any room heaters, water heaters, cookers, grills, etc.
- Ensure that the alarm horn can be heard by all those who are intended to hear it. Seek medical help if it is suspected that a user of the RV is suffering from Carbon Monoxide poisoning.
- If the alarm sounds, make sure to investigate the problem. Ignoring the alarm may result in sickness, injury, or death. (CO may be present even if nothing is seen or smelled by the user.)
- Room spaces should be well ventilated when household cleaning supplies are used as these may cause a false alarm.
- Alarm should be tested once per week. If further details are required, which do not appear in this manual, contact BRK Brands Inc. First Alert.

What Is Carbon Monoxide

Carbon Monoxide (CO) is a highly poisonous gas that is released when fuels are burned. It is invisible, has no smell, and is therefore, very difficult to detect with the human senses. Under normal conditions, in a room where fuel-burning appliances are well maintained and correctly ventilated, the amount of CO released into the room by appliances is not dangerous.

These fuels include: wood, coal, charcoal, oil, natural gas, gasoline, kerosene, and propane. Common appliances are often sources of CO. If they are not properly maintained, are improperly ventilated, or malfunction, CO levels can rise quickly. CO is a real danger in air-tight trailers with added insulation, sealed windows, and other weatherproofing that can trap CO inside.

Conditions that can result in potentially dangerous CO situations

1. Excessive spillage or reverse-venting of fuel-burning appliances caused by outdoor conditions, such as:
   - Wind direction and/or velocity, including high gusts of wind.
   - Heavy air in the vent pipes (cold/humid air with extended periods between cycles).
   - Negative pressure differential resulting from use of exhaust fans.
   - Simultaneous operation of several fuel-burning appliances competing for limited internal air.
   - Vent-pipe connections vibrating loose from clothes dryers, furnaces, or water heaters.
   - Obstructions in or unconventional vent-pipe designs which can amplify the above situations.
2. Extended use of un-vented fuel burning devices.
3. Temperature increase that can trap exhaust gases near the ground.

Symptoms of Carbon Monoxide Poisoning

- Mild Exposure - Slight headache, nausea, vomiting, fatigue (flu-like symptoms).
- Medium Exposure - Throbbing headache, drowsiness, confusion, fast heart rate.
- Extreme Exposure - Convulsions, unconsciousness, heart and lung failure. Exposure to carbon monoxide can cause brain damage and/or death.

⚠ DANGER

Many causes of reported CARBON MONOXIDE POISONING indicate that while victims are aware that they are not well, they become so disoriented that they are unable to save themselves by either exiting the area or calling for assistance. Also young children and pets may be the first to be affected.

⚠ WARNING

Test units used in RVs after the vehicle has been in storage, before each trip, and once a week while in use. Failure to test units used in RV's as described may remove your protection.

Basic Rules For LPG Safety

A warning label is displayed in the cooking area reminding you to provide an adequate supply of fresh air for combustion. The amount of oxygen supply in a trailer is limited due to its compact design. When using the cooking appliances, proper ventilation will prevent dangers of asphyxiation. It is especially important that cooking appliances not be used for comfort heating as the danger of asphyxiation is greater when the appliance is used for long periods of time.

⚠ DANGER

Do not use cooking appliances for comfort heating. Cooking appliances need fresh air for safe operation. Before operation, open an overhead vent or turn on an exhaust fan and open a window.

⚠ DANGER

A warning label has been located near the LPG container. This label reads: DO NOT FILL CONTAINER(S) TO MORE THAN 80 PERCENT OF CAPACITY. Overfilling the LPG container can result in uncontrolled gas flow, which can cause fire or explosion. A properly filled container will contain approximately 80 percent of its volume as liquid LP gas.

⚠ DANGER

Do not store LPG tanks within a vehicle. LPG tanks are equipped with safety devices that vent gas should the pressure become excessive.

⚠ DANGER

Portable fuel burning equipment, including wood and charcoal grills and stoves, shall not be used inside the recreational vehicle. The use of this equipment inside the recreational vehicle may cause fires or asphyxiation.

⚠ DANGER

Do not bring or store LPG tanks, gasoline, or other flammable liquids inside the vehicle because a fire or explosion may result.

Twice a year, or after a long storage period, we suggest you take your unit in for a checkup and cleaning of the gas-operated appliances.

If You Smell Gas

1. Extinguish any open flames, pilot lights, and all smoking materials.
2. Do not touch electrical switches.
3. Shut off the gas supply at the tank valve(s) or gas supply connection.
4. Open doors and other ventilating openings.
5. Leave the area until odor clears.
6. Have the gas system checked and leakage source corrected before using again

Fire Extinguisher

The fire extinguisher should be checked for charge on a regular basis. Make sure your family knows how to release the extinguisher storage bracket, and how to properly operate the extinguisher. Check with your local fire department for professional advice on its operation and use if you find the directions on the extinguisher unclear. They will be able and willing to assist you and your family.

Safety

As always, safety should be a top priority. Ensure that you, and everyone traveling with you, can operate the main door and emergency exit window rapidly, without light. Contemplate other means of escape in case the designated exits are blocked.

The escape windows(s) are identified by their red release handles. Lift up on both latches to release the escape window. Push out on the glass and it will swing clear.

⚠ WARNING

The window operation should be checked before each trip and the latches lubricated with silicon spray or an equivalent lubricant every 3 months.

⚠ WARNING

Read the directions on the fire extinguisher carefully. If you have any doubts as to its operation, you and your family should practice, then replace or recharge the extinguisher. Your local fire department will be able to assist you and answer any questions.

NOTES

AIRSTREAM®

Section 3
GENERAL INFORMATION

LIMITED WARRANTY POLICY 3-2
- This Limited Warranty Covers 3-2
- Limitation Of Implied Warranties 3-2
- Disclaimer Of Incidental And Consequential Damages 3-2
- Repair Remedy 3-2
- Back-Up Remedy 3-2
- What Is Not Covered 3-3
- Obtaining Warranty Service 3-4
- Events That Discharge Airstream's Obligations Under This Limited Warranty . . . 3-4
- Airstream Limited Warranty Excludes 3-5
  - Normal Wear 3-5
  - Accident 3-5
  - Abuse 3-5
  - Exposure 3-5
  - Overload 3-5

SERVICE. 3-6
- Coach-Net® Roadside Assistance 3-6
- Service Centers 3-6
- Reporting Safety Defects 3-6

CAMPING 3-7
- Suggested Pre-Travel Check List 3-7
  - Interior 3-7
  - Exterior 3-7
  - Trailer Equipment and Accessories . . . 3-7
  - Motoring Essentials 3-7
- Overnight Stop 3-8
- Extended Stay 3-8
- Leveling. 3-8
- Stabilizing Jacks 3-9
- Effects Of Prolonged Occupancy 3-9
  - Tips To Controlling Condensation 3-9
- Molds 3-10
  - Contributing Factors To Mold Growth . . .3-10
  - Inhibiting Mold Growth 3-10
- Waste Water System. 3-10
  - Things Not To Put Into Toilet Or Drains . .3-10
- Winter Traveling 3-12

Limited Warranty Policy

This Limited Warranty Covers

(i) The first retail owner and any subsequent owners (ii) ONLY those portions of a NEW travel trailer not excluded under the section “What is Not Covered”, when sold by an authorized dealership and used for its intended purpose of recreational travel and camping; and, (iii) ONLY defects in workmanship performed and/or materials used to assemble those portions of your travel trailer not excluded under the section “What is Not Covered”. “Defect” means the failure of the workmanship performed and/or materials used to conform with the design and manufacturing specification and tolerances of Airstream. The Limited Warranty is transferable and the subsequent owner’s warranty coverage period shall be the unexpired balance of the original warranty coverage period. A completed copy of the Warranty Transfer Form must be submitted to Airstream at the time of resale.

When you request and accept the performance of warranty repairs under the terms of this Limited Warranty, you are accepting all terms of this Limited Warranty, including by way of example, warranty limitations and disclaimers, the forum selection clause and the clause reducing the time period when suit must be filed for breach.

If any term of condition in this limited warranty conflicts with your state’s Uniform Commercial Code (“UCC”) as interpreted by courts within your state, the provisions of your state’s UCC are varied as allowed for by USS 1-302.

Coverage Ends

36 Months after the first retail owner first takes delivery of the travel trailer from an authorized dealership. Any action for breach of this warranty or any implied warranties must be commenced not more than 37 months after breach. Some states do not allow the reduction of the time when a breach of warranty claim must be commenced, so the reduction in time when a breach of warranty claim must be commenced may not apply to you.

Limitation Of Implied Warranties

Implied warranties arising under applicable law, if any, including but not limited to implied warranties of merchantability or fitness for a particular purpose, are hereby limited in duration to the term of this limited warranty and are limited in scope of coverage to those portions of the travel trailer covered by this limited warranty. There are no express warranties or any implied warranties of merchantability on those portions of the travel trailer excluded from coverage. There is no warranty of any nature made by Airstream beyond that contained in this limited warranty. No person has authority to enlarge, amend or modify this limited warranty. The dealer is not airstream’s agent. Airstream is not responsible for any undertaking, representation or warranty made by any dealer or others beyond those expressly set forth within this limited warranty. Some states do not allow limitations on how long an implied warranty lasts, so the above limitations may not apply to you.

Disclaimer Of Incidental And Consequential Damages

Airstream disclaims any and all incidental and consequential damages, including but not limited to expenses such as transportation to and from dealerships and Airstream repair facilities, loss of time, loss of pay, loss of use, inconvenience, commercial loss (including but not limited to lost profits), towing charges, bus fares, vehicle rental, service call charges, gasoline expenses, incidental charges such as telephone calls and facsimile transmissions, and expenses for lodging and moisture damage such as mold and mildew as well as rust and corrosion. This disclaimer is independent of any failure of the essential purpose of any warranties provided with the travel trailer, and shall survive any determination that a warranty failed of its essential purpose. Some states do not allow the exclusion or limitation of incidental or consequential damages, so the above limitation or exclusion may not apply to you.

Repair Remedy

Airstream’s sole and exclusive obligation is to repair any covered defects discovered within the warranty coverage period if: (1) within 10 days of your discovery of a defect you notify Airstream OR an authorized dealership of the defect; AND (2) you deliver your travel trailer to Airstream OR an authorized dealership at your cost and expense.

Back-Up Remedy

If the primary repair remedy fails to successfully cure any defect after a reasonable number of repair attempts, your sole and exclusive remedy shall be to have Airstream pay an independent service shop of your choice to perform repairs to the defect OR if the defect is incurable, have Airstream pay diminution in value damages. The repair remedy and the back-up remedy must both be exhausted and these remedies must fail to fulfill their essential purpose before you can seek other legal or equitable remedies for breach of this express warranty or for breach of any implied

warranty. This limited warranty is not a warranty that promises or extends to future performance because the warranty does not make a representation on how your travel trailer will perform in the future but instead represents only what the remedy will be if a defect exists.

Unless prohibited by state law, repairs will not extend the time when you must commence a breach of warranty claim and shall not extend the warranty coverage period. Any performance of repairs after the warranty coverage ends OR any performance of repairs to those portions of your travel trailer excluded from coverage shall be considered “good will” repairs. Warranty repairs should be expected. Airstream may use new and/or remanufactured parts and/or components of substantially equal quality to complete a repair. Damage to interior or exterior surfaces, trim, upholstery and other appearance items may occur at the factory during assembly, during delivery of the travel trailer to your selling dealer or on the selling dealer’s lot. Normally, any damage is detected and corrected at the factory or by the selling dealer during the inspection process. If you discover any damage when you take delivery of your travel trailer, you MUST notify your dealer OR Airstream within 10 days of the date of purchase to have damage repaired at no cost to you. Minor adjustments, such as adjustments to the interior or exterior doors, drawers, latches will be performed at no cost to you by your selling dealer during the first 90 days of warranty coverage; thereafter, such adjustments are your exclusive responsibility as normal maintenance.

What Is Not Covered

1. Tires, batteries, stereo, television, range/stove, furnace, refrigerator, air conditioner, toilet, water heater, microwave, generator, glass breakage, axle alignment, and other materials, parts and components warranted by persons or entities other than Airstream. Please refer to the warranties of component manufacturers for terms and conditions of coverage;
2. Accessories and equipment that are working as designed, but which you are unhappy because of the design
3. Any part or component of the travel trailer that was not manufactured or installed by Airstream;
4. Normal deterioration due to wear or exposure, including but not limited to upholstery, flooring rust, corrosion, oxidation, and cosmetic blemishes;
5. Normal maintenance and service items, including but not limited to light bulbs, fuses, lubricants, sealants and seals, door adjustments, and awning tension;
6. After-market equipment or accessories installed on the travel trailer after completion of manufacture by Airstream, or any defects or damage caused by such items;
7. Travel trailers not purchased through an authorized dealer of Airstream and travel trailers purchased directly or indirectly through auction, salvage, repossession, or other non-customary sale means;
8. Any travel trailer used other than for temporary recreation purposes, including, but not limited to, use of the travel trailer for residential, rental, business and commercial purpose or any travel trailer purchased by, registered by, or titled in the name of a business association (such as any LLC, corporation, or partnership). If the travel trailer owner or user files a tax form claiming a business or commercial tax benefit or income related to the travel trailer, it shall be irrefutable that the travel trailer has been used for rental, commercial or business purposes.
9. Defects or damage caused by, in whole or in part, or in any way related to: Accidents, misuse (including off-road use), or negligence; Failure to comply with the instructions set forth in any owner’s manual provided with the travel trailer; Alteration or modification of the travel trailer except such alterations or modifications approved in writing by Airstream; Acts of God or other environmental conditions, such as lightning, hail, salt causing rust, or other chemicals in the atmosphere; De-icing agents or other chemicals applied to the travel trailer; Failure to properly maintain or service the travel trailer, including but not limited to the maintenance of lubricants, sealants, and seals; Condensation and the results of condensation including water damage and the growth of mold or mildew. Mold and mildew are natural growths given certain environmental conditions and are not covered by the terms of this Limited Warranty; The addition of weight to the travel trailer that causes the total weight to exceed applicable weight ratings, or addition of weight causing improper distribution of the weight of the travel trailer; Failure to seek and obtain repairs in a timely manner; Failure to use reasonable efforts to mitigate damage caused by defects; Failure to properly ventilate the travel trailer; Improper electric power supply or improper travel trailer

hookup to other facilities; Acts or omissions of any person or entity other than Airstream. (Note: An irrefutable presumption arises that the travel trailer has been used for commercial and/or business purposes if the travel trailer owner or user files a tax form claiming any business or commercial tax benefit related to the travel trailer, or if the travel trailer is purchased, registered or titled in a business name.)

Obtaining Warranty Service

In order to obtain warranty service under this Limited Warranty, the owner must do all of the following:

1. Owner and dealer representative must complete and return the Customer Performance Checkout within 10 days from delivery of the trailer,
2. Notify Airstream or one of its authorized, independent dealers of any claimed defect within the warranty period or 10 days thereafter,
3. Provide notification of a defect within 10 days of discovery of that defect, and
4. Promptly return the travel trailer to an authorized Airstream dealer or Airstream for repairs.

If you believe a defect covered by this Limited Warranty still exists after an attempted repair by an authorized Airstream dealer, you must contact Airstream in one of the following manners, and specify:

1. The complete serial number of the travel trailer,
2. The date of original purchase and the date of original delivery,
3. The name of the selling dealer, and
4. The nature of the problem and the steps or service which have been performed.

Email: support@airstream.com

Phone: (937) 596-6111

Mail: AIRSTREAM, INC., 428 West Pike Street, P.O. Box 629, Jackson Center, Ohio 45334-0629, Attention: Owner Relations Department

Airstream may direct you to an authorized Airstream dealer, or may request that you bring your travel trailer to the Airstream factory in Jackson Center, Ohio for repairs.

Airstream does not control the scheduling of repairs at its authorized Airstream dealers, and repairs at the Airstream factory may not be immediately available. Therefore, you may encounter delays in scheduling repairs and/or completion of repairs. All costs associated with transporting the travel trailer for any warranty service shall be the sole responsibility of the owner.

Events That Discharge Airstream's Obligations Under This Limited Warranty

Misuse or neglect, accidents, unauthorized alteration, failure to provide reasonable and necessary maintenance (see Owner's Manual), damage caused by off road use, collision, fire, theft, vandalism, explosions, overloading in excess of rated capacities, and use of the travel trailer for commercial, business, or rental purposes shall discharge Airstream from any express or implied warranty obligation to repair any resulting defect.

Legal remedies: exclusive jurisdiction for deciding legal disputes relating to alleged breach of warranty or representations of any nature rests in the courts within the state of manufacture, which is Ohio. Also, this limited warranty shall be interpreted and construed in accordance with the laws of the state of Ohio. Any and all claims, controversies, and causes of action arising out of or relating to this limited warranty, whether sounding contract, tort or statute, shall be governed by the laws of the State of Ohio, including its statute of limitations, without giving effect to any conflict of law rule that would result in the application of the laws of a different jurisdiction.

Airstream Limited Warranty Excludes

Normal Wear

Items such as curtains, upholstery, floor coverings, window, door, and vent seals will show wear or may even wear out within the 3-year warranty period, depending upon the amount of usage, weather, and atmospheric conditions.

Accident

We strongly urge our dealers and customers to inspect the trailer upon receipt of delivery for any damage caused by accident while being delivered to the dealer, or while it is on the dealer's lot. Damage of this nature becomes the dealer or customer's responsibility upon acceptance of delivery, unless Airstream is notified and the person making the delivery verifies the damage. Glass breakage, whether obviously struck or mysterious, is always accidental and covered by most insurance policies.

Abuse

Lack of customer care and/or improper maintenance will result in early failure for which Airstream cannot be held responsible.

Chemical Gassing

Chemical gassing is not a "Defect" in your recreational vehicle and is not covered by the Limited Warranty. Please follow the recommendations in this manual to address this concern.

Exposure

Not unlike a car, the steel parts of a trailer can and will rust if subjected to prolonged exposure to moisture, salt air, or corrosive air-borne pollutants without repainting. Aluminum oxidizes when unprotected under similar conditions, and refinery chemicals of a sulfurous nature are harmful to finishes if not washed off periodically. Extremely hot or direct sunlight will deteriorate rubber and fade curtains and upholstery. Conditions of this nature, although they may be normal for the area, are beyond Airstream's control and become the responsibility of the owner.

It is the responsibility of the owner to take such preventative measures as are necessary to maintain the exterior caulking and sealer of your unit. It is the responsibility of the owner to use reasonable, prudent care to prevent foreseeable secondary damage from rain, plumbing leaks, and the natural accumulation of moisture in your unit, such as a delaminated floor; stained upholstery, carpeting, or drapes, mold formation and growth, furniture damage, etc. Mold is a natural growth, given certain environmental conditions, and is not covered by the terms of the Limited Warranty.

Overload

Damage due to loading, either beyond capacity or to cause improper towing because of improper balance, is beyond Airstream's responsibility. The Airstream trailer is engineered to properly handle the gross vehicle load rating on the certification label. Load distribution has a definite effect upon the towing characteristics and attitudes of the trailer. Level hitch installations are a necessity, and very important on a tandem axle trailer. There are limits to the amount of load that can be safely transported, depending upon speed and road conditions, and reasonable cause to believe these factors have been exceeded could void the Airstream warranty. For additional information on the loading of your trailer, consult this Owner's Manual or gross vehicle weight rating plate.

The axle is manufactured to a tolerance of 1-degree camber and 1/8 in. toe-in. These tolerances will only change if the trailer is subjected to abuse, such as dropping off a sharp berm, striking a curb, or hitting a deep hole in the road. Such damage could be considered as resulting from an accident, of which risks are not covered under the warranty. Abnormal tire wear and/or wheel alignment resulting from such damage is not covered under the terms of the warranty.

Service

Coach-Net® Roadside Assistance

Every new Airstream comes with a three-year, transferable subscription to Coach-Net which includes a long list of premium services to help quickly solve issues or learn about your Airstream.

To learn more, scan the QR code above, navigate to https://www.airstream.com/owners/coach-net/, or call Coach-Net at 855-817-1885. On-call technicians are always ready to answer questions.

Service Centers

Before leaving the factory, every vital part of the trailer is tested for performance. Each test is signed and certified by an inspector. After the trailer arrives on your dealer's lot, all vital parts and systems are again tested. When you take delivery of your new trailer, you will receive a complete check out.

At that time, a specified list of performance checks on your trailer equipment will be conducted, and any deficiencies you have experienced since taking delivery will be corrected.

Please contact your dealer if your trailer needs service. Major service under your Airstream Limited Warranty is available through our nationwide network of Airstream Dealer Service Centers. To find a dealer, please visit, www.Airstream.com to use our dealer locator.

Occasionally, dealerships change, or new dealers are added that may not appear on the website immediately. Please note that all centers operate on an appointment basis for the utmost efficiency.

When you require service for your trailer from the Airstream Factory Service Center, or a Certified Dealer Service Center, please contact the service manager for an appointment, and inform them if you are unable to keep the appointment date, or wish to change it. Service may be arranged at the Factory Service Center by contacting the Service Coordinator at:

Airstream Factory Service Center,

428 West Pike Street

P.O. Box 629

Jackson Center, Ohio 45334-0629

Phone: (937) 596-6111 or (877) 596-6111

Reporting Safety Defects

If you believe that your vehicle has a defect which could cause a crash or could cause injury or death, you should immediately inform the National Highway Traffic Safety Administration (NHTSA), in addition to notifying Airstream, Inc.

If NHTSA receives similar complaints, it may open an investigation, and if it finds that a safety defect exists in a group of vehicles, it may order a recall and remedy campaign. However, NHTSA cannot become involved in individual problems between you, your dealer, or Airstream, Inc.

To contact NHTSA, you may either call the Vehicle Safety Hotline toll-free at 1-888-327-4236 (TTY: 1-800-424-9153), go to http://www.safercar.gov, or write to:

Administrator,

NHTSA,

1200 New Jersey Avenue, S.E.,

Washington, DC 20590.

You can also obtain other information about motor vehicle safety from http://www.safercar.gov.

Camping

Suggested Pre-Travel Check List

Interior

1. Turn off water pump switch.
2. Check battery water level.
3. Close windows and vents.
4. Lock all interior cabinet doors.
5. Latch refrigerator door. (Seal containers first)
6. Hold down or stack securely all loose, hard, and sharp objects.
7. Fasten sliding and foldette doors.
8. Drain toilet bowl.
9. Turn off interior lights.
10. Lower wall mounted tables to be even with dinette seats. Place Pedestal tables in upright position. .
11. Pull up or retract step.
12. Lower blinds.
13. Secure and lock main door.

Exterior

1. Disconnect and stow the electrical hookup cord, and the sewer (flush out) and water hookup hoses.
2. Turn off gas at LP tanks.
3. Retract stabilizing jacks.
4. Check hitch for proper attachment.
5. Check safety chains and breakaway switch cable.
6. Fully retract hitch jack. Remove and stow jack stand or wood block.
7. Check clearance and stoplights.
8. Check lug nuts.
9. Check tires for correct pressure.
10. Adjust tow vehicle mirrors.
11. Pull forward about 50 ft, test brakes, and check site for forgotten objects and cleanliness.

Trailer Equipment and Accessories

1. Water hose, 5/8 in. high pressure, tasteless, odorless, non-toxic, (2 25-ft. sections)
2. Y connection - water hose
3. Sewer hose with clamp
4. Drain cap with hose drain
5. Holding tank cleaner and deodorizer
6. Power cord adapter, 30-amp capacity
7. 30-ft. electric cord, 30-amp capacity
8. Woodblocks for leveling
9. Wheel chocks
10. Hydraulic jacks
11. Cross-type lug wrench and a torque wrench
12. Quality tire gauge
13. Emergency road warning triangle

Motoring Essentials

1. Display the tow vehicle and trailer registration properly.
2. Carry driver’s license.
3. In Canada, bring along a non-residence liability insurance card and your birth certificate.
4. In Mexico, you must have special auto insurance.
5. Carry an extra set of the ignition and truck keys in a separate pocket, or in your wallet.
6. Keep an operating flashlight with fresh batteries in the glove compartment.
7. Pack the trunk so that you can reach the tools and spare tire without completely unpacking.
8. Keep sharp or hard articles securely packed, wherever they may be.
9. Carry a first-aid kit.
10. Carry your pet’s dish, food, leash, and health and registration papers.

Overnight Stop

Airstream owners have parked virtually in every place imaginable, from filling stations to farmlands. In time, you'll develop a knack for spying wonderful little roadside locations by turning off the main highway and exploring.

There are many modern parks, including State, County, and Federal parks with good facilities where you might obtain hookups of electrical, water, and sewer connections. Directories are published which describe in detail these parks and tell what is available in the way of services and hookups.

On overnight or weekend trips, chances are you will not use up the capacity of the sewage holding tank, deplete the water supply, or run down the batteries that supply the 12-volt current.

On a longer trip, when you have stayed where sewer connections and utility hookups were not available, it will be necessary for you to stop from time to time to dispose of the waste in the holding tank and replenish the water supply. Many truck stops and gas stations, chain and individually owned, have installed sanitary dumping stations for just this purpose. Booklets are available that list these dumping stations.

When stopping for the night, your Airstream is built to be safely parked in any spot that is relatively level and where the ground his firm. Your facilities are with you. You are self-contained. Unless the tow vehicle is needed for transportation, it is not necessary to unhitch.

⚠ DANGER

At each campsite, make sure you have not parked in such a manner as to block the operation of the escape window by being too close to trees, fences, or other impediments. Scenic views are one reason for traveling, but don't park so the beautiful lake or steep cliff is just outside your escape window.

Choose the most level parking spot possible. Stabilizing jacks or blocks may not be required for an overnight stay. However, if you put the jack pad on the hitch jack and run the hitch jack down to take the weight off the tow vehicle's springs, it will provide some stability. If you must park on a slope, park facing downhill. It is easier to level the trailer this way.

All you need to do to enjoy the self-contained luxury of your Airstream is to turn on the LPG and light any appliance pilot lights.

Before moving on, check your campsite, both for cleanliness and also, to be sure you haven't left anything behind. Turn off the gas supply and make sure everything is properly stowed. Use your pre-travel check list and you are ready for more travel adventure.

Extended Stay

Making a long trip in your Airstream is not very different from making a weekend excursion. Since everything you need is right at hand, you are at home wherever you go. When packing for an extended trip, take everything you need, but only what you need.

When you plan to stay in the same place for several days, weeks, or months, you will want your trailer to be as level and steady as possible. Check the attitude with a small spirit level set on the inside work counter or the trailer hitch A-frame. If a correction is necessary, you must level from side-to-side first. This can be done easily by backing the trailer up onto one or more 2 x 6 boards. We do not recommend placing tires in a hole for leveling.

Leveling

Block or chock the wheels to keep the trailer from rolling. Level from front to rear by disconnecting the hitch from the tow vehicle, putting the jack pad under the hitch jack, and adjusting the jack up or down until you are level. Use stabilizing jacks at all four corners, as shown in the diagram, to eliminate the natural spring action of the axles.

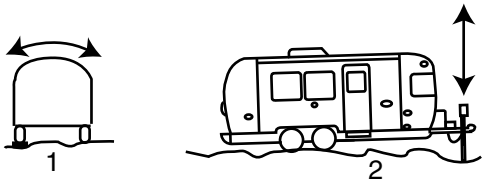

1. Side-to-Side
2. Front-to-Rear

Stabilizing Jacks

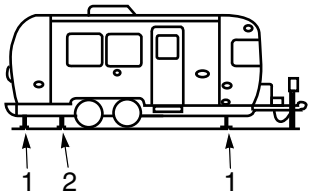

1. Stabilizing Jack Location
2. Lifting Jack Location

⚠ WARNING

Stabilizing jacks should only be used to stabilize trailer. Do not use jacks to lift the trailer.

⚠ WARNING

Whenever the trailer must be lifted with a jack, as when changing a tire, always place the lifting jack under the main frame rail. A label is provided to indicate the proper position for the jack. Never use stabilizing jacks to lift the trailer.

For more information on jacking, see Tire Changing on page 8-5.

Effects Of Prolonged Occupancy

Your trailer was designed primarily for recreational use and short-term occupancy. If you expect to occupy the trailer for an extended period, be prepared to deal with condensation and the humid conditions that may be encountered.

Moisture can condense on the inside surfaces of the trailer during cold weather when relative humidity of the interior air is high. This condition is increased because the insulated walls of a recreation vehicle are much thinner than house walls. Also, the relatively small volume and tight, compact construction of modern recreational vehicles means that the normal living activities of even a few occupants will lead to rapid moisture saturation. Estimates indicate that a family of four can vaporize up to three gallons of water daily through breathing, cooking, bathing, and washing. Unless the water vapor is carried outside by ventilation, or condensed by a dehumidifier, it will condense on the inside of the windows and walls as moisture, or in cold weather, as frost or ice. It may also condense out of sight, within the walls or the ceiling, where it will manifest itself as warped or stained panels.

Appearance of these conditions may indicate a serious problem. When you recognize the signs of excessive moisture and condensation in the trailer, action should be taken to minimize their effects.

Tips To Controlling Condensation

Allow excess moisture to escape to the outside when:

- Bathing, washing dishes, hair drying, etc
- Laundering, and using appliances and non-vented gas burners
- Cooking (always use the stove vent hood)

Avoid dead air spaces by:

- Using a fan to keep air circulating.
- Leaving closet and cabinet doors partially open.

To help alleviate cold weather condensation:

- Keep the temperature as reasonably cool during cold weather as possible.
- Allow your trailer to breathe; do not make it airtight.
- Allow some warm air to be removed and some cool outside air in.
- Do not allow the furnace to recycle humid interior air, and provide reasonable ventilation.

In hot weather, starting the air conditioner early will help remove excess humidity from the air while lowering temperatures.

NOTICE

Your trailer is not designed, nor intended, for permanent housing. Use of this product for long-term or permanent occupancy may lead to premature deterioration of structure, interior finishes, fabrics, carpeting, and drapes. Damage or deterioration due to long-term occupancy may not be considered normal, and may, under the terms of the warranty, constitute misuse, abuse, or neglect, and may therefore reduce the warranty protection.

Molds

Molds are microscopic organisms that naturally occur in virtually every environment, indoors and out. Outdoors, mold growth is important in the decomposition of plants. Indoors, mold growth is unfavorable. Left unchecked, molds break down natural materials, such as wood products and fabrics. Protect your investment by understanding the potential risks that mold imposes.

Contributing Factors To Mold Growth

For mold growth to occur, temperatures, indoor or outdoors, must be between 40° and 100°F, and must also have a source of moisture, such as humidity, standing water, damp materials, etc. Indoors, the most rapid growth occurs with warm and humid conditions.

Inhibiting Mold Growth

By controlling relative humidity, the growth of mold and mildew can be inhibited. In warm climates, use of the air conditioner will reduce the relative humidity. Vents are located in the bathing and cooking areas. Constant use of these vents is advised during food preparation and bathing, even during colder weather. Additionally, opening a window during these activities will assist in ventilation. In extremely humid conditions, the use of a dehumidifier can be helpful.

Frequent use of your trailer, or cleaning regularly, are important preventive measures. Additionally, any spills should be wiped up quickly and dried as soon as possible. Avoid leaving damp items lying about. On safe surfaces, use mold or mildew-killing cleaning products. Check sealants regularly, and reseal when necessary to avoid water leaks. Proper preventive maintenance to the trailer and its accessories, as described both in this manual and in accompanying literature, will provide the best protection to the trailer.

For more information concerning controlling moisture in the trailer, see Tips To Controlling Condensation on page 3-9.

NOTICE

If using a dehumidifier, please read and follow all manufacturer instructions and recommendations for the use and cleaning of the dehumidifier.

Waste Water System

The main parts of the waste water system are the toilet, holding tanks, and tank dump valves; see Black and Gray Water Tank Draining on page 8-14. The system is designed to provide complete self-contained toilet facilities, while on the road or parked, without being connected to a sewage line. It may also be used in the stationary position while connected to a sewage hose.

Keep the dump valves closed with either method and empty the tanks when they are nearly full. The idea is to send a large volume of water through the tanks and hose at the same time to float solids away.

After the sewage tank has been emptied, close the dump valves and put approximately five gallons of water in the sewage holding tank using the black tank flush inlet. This will spray the interior of the tank with water and help prevent solids from building up in the sewage holding tank. The addition of a deodorizing agent like Aqua-Kem® will help prevent odors.

Should you ever have a buildup of solids, close the valves, fill the tanks about 3/4 full with fresh water, drive a distance to agitate the solids, and drain the tanks.

Things Not To Put Into Toilet Or Drains

- Facial tissues and feminine hygiene products (they do not dissolve like toilet paper).
- Automotive antifreeze, ammonia, alcohols, or acetone.
- Table scraps or other solids that may clog the drains.

16RB Model

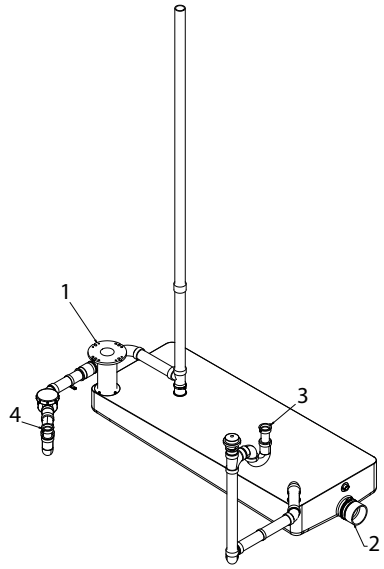

1. Toilet Flange
2. Black/Grey Water Tank (Toilet)
3. Galley Drain
4. Shower Drain

20FB Model

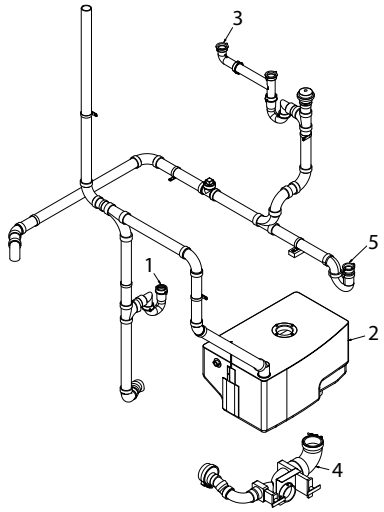

1. Lavatory Drain
2. Black Tank (Toilet)
3. Galley Drain
4. Dump Valve
5. Shower Drain

19CB Model

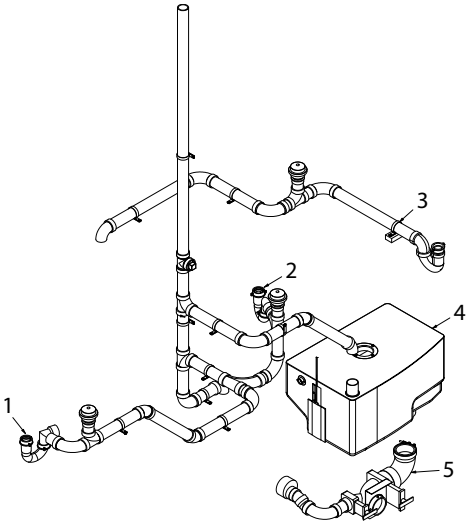

1. Galley Drain
2. Lavatory Drain
3. Shower Drain
4. Toilet Drain (Black Tank)
5. Dump Valve

22FB Model

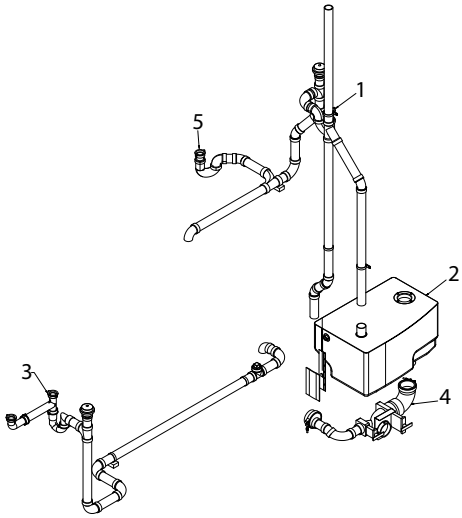

1. Lavatory Drain
2. Black Water Tank (Toilet)
3. Galley Drain
4. Dump Valve
5. Shower Drain

Winter Traveling

Traveling in sub-freezing temperatures will require certain precautions to protect the plumbing system and your personal belongings from being damaged by freezing.

Whenever possible, the heat should be kept set to a constant temperature. It is easier for the furnace to keep a constant room temperature than allow the trailer temperature to drop to 50°F, then attempt to raise it to room temperature.

The furnace is ducted to provide heat to the below floor water tanks and plumbing to prevent freezing.

Some states do not allow LPG to be turned on while moving. While traveling in these states, simply use your common sense. How cold is it? How long will it be before you can turn the heat back on? Is the temperature dropping or rising? Remember, when towing at 50 MPH, the wind chill factor will cause the interior of the trailer to cool much faster than a parked trailer.

1. When parked in sub-freezing temperatures, make sure to keep a full supply of LPG and plug into an external AC power source whenever possible.
2. If your stay is longer than overnight, you should try to have 120-volt electricity available. Minimize the use of electricity if a 120-volt power source is not available.
3. Leave cabinet doors, wardrobes, and bed doors partially open to allow warm air to circulate around plumbing lines and fixtures. Insulate and/or wrap your exterior water lines with heat tape.

NOTICE

Drain and winterize your airstream if the water system is not being used during winter traveling. Refer to Section 8 - Maintenance in this manual for winterizing instructions.

AIRSTREAM®

Section 4
FLOOR PLANS AND SPECIFICATIONS

FLOOR PLANS 4-2
16RB Bambi 4-2
19CB Bambi 4-2
20FB Bambi 4-2
22FB Bambi 4-2
SPECIFICATIONS 4-3
Specification Chart 4-3
Specification Tags 4-4
Measuring Hitch Ball Height 4-4

Floor Plans

16RB Bambi

19CB Bambi

20FB Bambi

22FB Bambi

Specifications

Specification Chart

NOTE

All product information and specifications listed are as accurate as possible at the time of printing. Since we continually strive to improve our products, all specifications are subject to change without notice. All capacities are approximate and dimensions are nominal and are checked and updated throughout the model year.

Item	Floor Plans			
	16RB	19CB	20FB	22FB
Exterior length	16' 1"	19' 1"	20' 7"	21' 11"
Exterior width	8'	8'	8'	8'
Exterior height with A/C	9' 3"	9' 3"	9' 3"	9' 3"
Interior width	7' 7"	7' 7"	7' 7"	7' 7"
Interior height with A/C	6' 4"	6' 4"	6' 4"	6' 4"
Hitch ball height	19"	19"	19"	19"
Hitch ball size	2 5/16”	2 5/16”	2 5/16”	2 5/16”
UBW (lbs. with LP & batteries)	3050	3650	3900	3850
Hitch weight (lbs. with LP & batteries)	450	525	625	525
GVWR (lbs.)	3500	5000	5000	5000
NCC (lbs.)	450	1350	1100	1150
Fresh water tank (gal.)	23	23	23	23
Gray water tank (gal.)	N/A	29	30	30
Black water tank (gal.)	N/A	18	18	17
Combo gray/black tank (gal.)	30	N/A	N/A	N/A
Lug nut torque (Max), aluminum wheels (ft lbs.)	110	110	110	110
Lug nut torque (Max), steel wheel (spare) (ft lbs.)	100	100	100	100
Tire size	ST225/75R15			
Tire Max cold* inflation pressure (psi)	80			
Tire Max load rating (lbs.)	2830			

*The term *cold* refers to how long a tire has sat idle. *Max cold inflation pressure* should be checked in the morning (after sitting idle for at least three hours) before driving more than a few miles, or before rising ambient temperatures and the sun’s radiant heat can affect tire pressure.

The UBW and NCC weights listed in the Specification Chart are for the base unit with LP and batteries included.

Gross Vehicular Weight Rating (GVWR) is the maximum permissible weight of this trailer when fully loaded. It includes all weight at the trailer axle(s) and coupler.

Unit Base Weight (UBW) is the dry weight of the base unit without options.

Net Carrying Capacity (NCC) is equal to GVWR minus UBW. Gross Axle Weight Rating (GAWR), is the value specified as the load-carrying capacity of a single axle system, as measured at the tire-ground interfaces.

Specification Tags

For precise cargo capacity, refer to the Cargo-Carrying Capacity tag on the inside of the screen door. The **WEIGHT OF CARGO SHOULD NEVER EXCEED** numbers shown on the tag, which is the maximum weight of cargo you can load and carry in your specific trailer as built with its options.

Located on the front roadside of your trailer are the Tire and Loading, and Vehicle Manufacturing tags. The Tire and Loading information tag lists the Size and Cold Inflation Pressure of the tires on your vehicle, the weight of your trailer as manufactured, and the GVWR.

The Vehicle Manufacturing tag lists the size of tires and wheel rims, Maximum Cold Inflation pressures, the Vehicle Identification Number (VIN), and Gross Axle ratings (GAWR).

Measuring Hitch Ball Height

The proper height will vary according to the weight you carry and the tires you use. However, checking the height on your trailer is relatively easy:

1. With trailer parked on fairly level ground, measure from ground to bottom of frame, front and rear.
2. Adjust front jack until measurements are equal.
3. Now, measure from ground to the inside top of the ball coupler. This figure is the hitch height. The hitch ball is then usually set 1/2 to 1 in. higher, according to the spring rate of your tow vehicle, to allow for it to settle when the trailer is hitched up.

AIRSTREAM®

Section 5
INTERIOR

GENERAL INFORMATION AND CLEANING . . . 5-3
- Upholstery . . . 5-3
- Curtains . . . 5-3
- Interior Aluminum Skin . . . 5-3
- Interior Woodwork . . . 5-3
- Counter Area . . . 5-3
- Sinks . . . 5-3
- Vinyl Flooring . . . 5-4
  - Interior Doormat and Rug Selection . . . 5-4
  - Polishing the Flooring . . . 5-4
- Shower Stall . . . 5-4
  - Shower Head . . . 5-4
  - Retractable Clothesline . . . 5-4
- Dinette and Bed Conversion . . . 5-4
- Ceiling and Directional Lighting . . . 5-4
- Storage Tips . . . 5-5

PLUMBING . . . 5-5
- Water System (Self-Contained) . . . 5-5
- Water Pump . . . 5-5
- Draining System . . . 5-5
  - Fresh Water Lines and Tanks . . . 5-5
  - Drain and Waste System . . . 5-5
- Toilet . . . 5-6
  - Deodorizers and Biological Chemicals . . . 5-6
- Faucets . . . 5-6
  - Galley Faucet . . . 5-6
  - Lavatory Faucet . . . 5-6

ELECTRICAL . . . 5-7
- Battery/12-Volt System Information . . . 5-7
- Battery Disconnect Switch . . . 5-7
- Power Center . . . 5-8
- 12-Volt Power Circuits . . . 5-8
- Converter Operation . . . 5-9
- 120-Volt AC Panel Board . . . 5-9
- Fuses and Breakers . . . 5-9
  - Breakers . . . 5-9
  - 12 VDC Fuses . . . 5-9
  - REVERSE Polarity Fuses . . . 5-9
- Automatic Micro-Controller Operation . . . 5-9
- 120-Volt Electrical System . . . 5-10
  - City Power . . . 5-10
  - Converter . . . 5-10
  - Ground Fault Circuit Interrupter (GFCI) . . . 5-10
  - GFCI Breaker Test . . . 5-11

ENTERTAINMENT SYSTEMS . . . 5-11
- TV and Sound System . . . 5-11
- TV/Radio Antenna . . . 5-11
  - Airstream Connected, Wi-Fi . . . 5-11

Section 5
Interior

APPLIANCES 5-12
Maintenance 5-12
Air Conditioner 5-12
Cooktop. 5-12
Ceiling Vent Fan 5-13
Cleaning Instructions 5-13
Exhaust Vent 5-13
Operation 5-13
Cleaning Instructions 5-13
Fuse Replacement 5-13
Furnace 5-14
Thermostat 5-14
Microwave Ovens 5-14
Monitor Panel 5-14
To Read a Water or Sewer Tank Level . .5-15
To Read the Battery Voltage 5-15
Refrigerator 5-15
Operation 5-15
Start up 5-15
Defrost and Cleaning 5-15
Solar System. 5-16
Water Heater. 5-17
Electronic Ignition 5-17
Common Error Codes. 5-17

General Information and Cleaning

The interior of all Airstream trailers has been designed for comfort, convenience, durability, and appearance. How you use it and how you take care of it, naturally, depends on you. However, if you learn to operate the interior components, and take care of them and the trailer properly, this knowledge will add to your pleasure, as well as the long life of your trailer.

Upholstery

To clean the Performatex® fabric upholstered seating, first remove as much loose dirt as possible. Start with a mild detergent mixed with lukewarm water to clean the fabric. For more stubborn stains, bleach can be used as follows: Prepare a solution of one cup of bleach and one fourth cup of mild soap per gallon of cold to lukewarm water. Spray the solution on entire area to be cleaned and allow 15 minutes to soak into the fabric. Clean the entire surface area with a sponge, clean towel or very soft bristle brush to avoid abrading the fabric. Rinse thoroughly to remove all soap residue, then air dry. For severe cases of mold/mildew growth, bleach quantities may be increased. It is best to clean the entire surface area of the fabric to avoid water rings and stains.

NOTICE

Never remove cushion covers for separate dry cleaning or washing. Any tumble cleaning method can destroy the backing, and/or shrink or otherwise damage upholstery fabric.

⚠ WARNING

Keep your furniture and family safe from fires caused by careless smoking. Do not smoke when drowsy. Remove immediately any glowing ash or a lighted cigarette that falls onto furniture. Smoldering smoking material can cause upholstered furniture fires.

Curtains

The curtains are on a track. Undo the velcro at the seams to slide them open. Airstream recommends dry cleaning only for the curtains. To remove them, remove the top screw from the endcap of the curtain track, pull the endcap off, and slide the curtains off.

NOTICE

All drapery materials and mattress covers must be professionally dry-cleaned.

Interior Aluminum Skin

Interior aluminum skin can be cleaned by washing skin with any mild non-abrasive soap or detergent. Cleaning should be followed by a thorough clean water rinse. Drying the unit with a chamois or a soft cloth may prevent spots and streaks. Do not use abrasive cleaners or utensils on the aluminum skin as it is coated with a clear coat that could be damaged.

NOTICE

When washing or polishing your trailer, always wipe with the grain of the metal.

Interior Woodwork

The finish on the interior woodwork is a high quality furniture finish and should be treated as any fine furniture finish. Use a high quality furniture cleaner which does NOT contain ammonia or bleach. One good choice is Murphy Oil Soap Clean and Shine.

Counter Area

The counter tops are made of a high-pressure laminate and can be cleaned with soap and water, or you can use a common solvent on tough spots. Do not use abrasive cleaners since they could scratch the surface. A protective pad should always be used under hot utensils or pans.

Sinks

Rinse and wipe sinks clean with a soft cloth after each use. Clean sinks thoroughly at least once a week with a mild soap. For the galley sink, use either mild soap or a non-abrasive stainless-friendly cleaner and a non-abrasive sponge or rag; rinse thoroughly to remove all cleaning residue. Always clean with the grain.

NOTICE

The stainless-steel galley sink has a protective layer. To prevent damage, please refer to your Owner's packet and read the manufacturer's detailed cleaning instructions. Do not use bleach. Do not use abrasives like steel wool or scouring pads as they will damage your sink. Do not leave steel or cast-iron cookware in the sink.

Vinyl Flooring

Use a soft broom to sweep the floor. A vacuum cleaner may damage the flooring, especially the type that use beater bars. In most cases, a clean damp cloth or mop will suffice to clean dirty flooring. When necessary, a solution of mild detergent or domestic floor cleaning emulsion can be used to clean the flooring. Do not use a wire brush or nylon scouring pads, furniture polish, spirit-based polish, powder or liquid abrasive cleaners, bleach or other strong detergents. Scuffs, dirt, and spillages should be cleaned up as soon as possible.

Interior Doormat and Rug Selection

To avoid staining or discoloration of vinyl flooring, only use doormats or rugs made of natural fibers. The rubber-backed mat provided by Airstream is suitable for outdoor use only.

NOTICE

Rubber or latex-backed mats or furniture with rubber feet may stain or discolor vinyl flooring.

Polishing the Flooring

Vinyl floors do not require waxing or polishing. However, applying polish will provide additional protection for the floor. Always follow the manufacturer's instructions when using a floor polish or cleaner and ensure it is suitable for use with cushioned vinyl flooring.

Shower Stall

To clean your fiberglass shower stall unit, use warm water and one of the stronger liquid detergents. Do not use abrasive cleaners as they may scratch and dull the surface of your unit. Stubborn stains can be removed with solvents such as turpentine, paint thinner, or acetone. Restore dulled areas by rubbing with an automotive type liquid cleaner, then, put the soft glow back into your unit with a light application of liquid wax.

⚠ WARNING

Applying wax to the base of the shower floor is not recommended, as this could create an unsafe surface.

Shower Head

The shower head is designed to give maximum flexibility in usage, and provides for water-saving techniques when using your trailer on self-containment. It can be held in the hand and moved about the body. Normally, the best water conservation procedure is to wet the entire body and then turn the water off. Apply soap, lather thoroughly, and then rinse the soap off.

Retractable Clothesline

A retractable clothesline is installed for your convenience in the shower stall. To use, pull the line from the base and attach it to the holder on the opposite wall. Turning the nut on the base will tighten the line.

Dinette and Bed Conversion

To convert models with a wall-mounted dinette table, lift upward on the front of the table and find the latch on the front of the table leg. Push the latch downward. The latch will release the table leg and allow you to fold it up and lock it into place on the underside of the tabletop. With the leg locked into place, lift the back of the table off the wall brackets. Once unhooked, the tabletop can swing on its hinge, allowing you to lower the tabletop onto the supports of the dinette seats. Place the backrest cushions over the tabletop to complete the conversion. We recommend that you travel with the table in the lowered position.

For models with a telescoping pedestal leg, release the compression clamp levers on the pedestal leg and push the table down. Once lowered, clamp the levers back into place to lock the leg into the lowered position. Place the backrest cushions over the tabletop to complete the conversion.

Ceiling and Directional Lighting

All lighting in the Airstream trailer is LED and most will require a replacement fixture should it go out. The main ceiling lights can be turned on/off by the switch at the entry door. Some light fixtures may have a push button switch located on the fixture. The bed and lounge areas have individually switched directional lighting.

Storage Tips

Galley cabinets should have the heaviest items stored on the bottom and lighter items overhead. After loading, put skillets and canned goods on the floor or bottom shelf, and cereals and crackers in the overhead roof locker. Use unbreakable-type plates and saucers, and consider storing your dish towels around them.

Clothes hung in wardrobes should be kept on hangers that snap over the clothes rods to keep them from bouncing off on rough roads. Try to avoid large bulky coats. Layers of lighter clothing will usually keep you warmer, are more versatile, and are easier to store.

⚠ WARNING

Keep flammable material away from the furnace and vents.

Plumbing

Water System (Self-Contained)

Fill the water tank by opening the exterior access door and remove screw cap. A potable water hose can now be inserted. It is a good idea to let the water run through the hose for a short time to flush it out. Experienced RVers usually fill their tanks with “home” water to avoid strange water that may be distasteful to them. The amount of water in the tank may be checked on the Monitor Panel, or you may fill the tank until water overflows out of the fill.

Open the hot side of the galley or lavatory faucet and turn on the water pump switch located on the monitor panel. For some time, the open faucet will only sputter. This is because air is being pushed out through the lines. Now, open a cold faucet. It will sputter for a short time, but will soon expel a steady stream. All other faucets can now be opened until all air is expelled. Once the system is filled with water and the faucets closed, the water pump will shut off. When a faucet is opened, the pump will come back on automatically. If the faucet is just barely open, it is normal for the pump to cycle on and off rapidly.

Water Pump

The water pump switch operates the pump (monitor panel mounted); see Monitor Panel on page 5-14. Once the switch is turned on, the pump will run until the water pressure reaches about 55 PSI. At this point, an internal pressure switch will shut it off. When a faucet is opened, the water pressure will drop and the pump will start to run again.

As a general rule, the water pump should be turned off while using a city water hookup, however the water pressure at some campgrounds may be low. The water pump can be turned on to assist the city water hookup pressure. Be sure there is some water in the fresh water tank. The pump will only use the water that is needed out of the tank to bring the pressure up to the usual standard of 55 PSI.

Access to the water pump will be necessary for periodic cleaning of the strainer screen; see Water Pump Access Locations on page 8-12 *and* see Strainer Cleaning on page 8-12.

NOTICE

Turn off the water pump while traveling to prevent water from being pumped in the event a faucet opens in transit.

Draining System

Fresh Water Lines and Tanks

The fresh water system’s water lines have low point drain valves and can be drained. The fresh water tank has a valve and can also be drained; see Fresh Water Tanks and Draining on page 8-12

Drain and Waste System

Your trailer has a drain and waste system that includes waste-holding tanks made from corrosion-free molded plastic, with trouble-free dump valves.

The main (Black Water) holding tank enables you to use the toilet for several days away from disposal facilities. The wastewater from the sink, shower, bath and lavatory drains into the auxiliary (Gray Water) holding tank.

Each tank has its own dump valve with both tanks draining through a common outlet. Therefore, only one sewer hose connection is needed when hooking up to a dump station.

Almost all campgrounds will have dumping facilities. Park directories, such as Woodalls and Rand McNally, also list dumping stations; see Black and Gray Water Tank Draining on page 8-14.

Check your monitor panel frequently; see Monitor Panel on page 5-14. When the Black Water holding tank is completely full, sewage cannot be emptied from the toilet bowl. If the Gray Water holding tank is overfilled, drain water may back up into the tub and cause an unpleasant cleaning job. Never drain the tanks at any place other than an approved dumping station.

NOTE

The 16 ft. model has a combination black/gray holding tank. Draining procedure is the same, however only one dump valve handle is used to drain the tank.

NOTICE

Never put wet strength paper towels or tissues in your holding tank since they will not dissolve and can catch in the mechanism of the dump valve. Colored toilet tissue is slower to dissolve than white. Most RV-accessory stores offer tissue designed for RVs that will completely dissolve.

Toilet

The RV toilet in your trailer is a design that has been used for many years. There is only one pedal. This pedal opens and closes the slide mechanism, and opens the water valve.

In normal use, depressing the pedal dumps the sewage and flushes water down the side of the bowl. Water will continue to run into the bowl for a short time after the pedal is released.

When you wish to conserve water, hold the hand-spray head (if equipped) over the bowl and hold down the thumb-operated lever. When depressing the pedal, all the water is routed through the hand-spray.

NOTICE

When you dump the bowl of the toilet, make sure all paper and solids have cleared the slide mechanism before you allow it to close. Failure to do so can cause the groove for the slide to become jammed and the slide will no longer close completely.

Please see the toilet owner's/user manual for warranty and user tips, and maintenance information.

Deodorizers and Biological Chemicals

There are many deodorizers and processing chemicals on the market in tablet, liquid, and powder form. These not only combat odor, but also stimulate the bacteria that works to dissolve the solids and tissues in your waste tank. These chemicals should be introduced through the toilet prior to use per the manufacturers directions. It's also important to always add a few gallons of water by filling the toilet bowl a few times and depressing the foot pedal.

Faucets

Galley Faucet

Airstream Part #602243

Moen - Model 2967425

Lavatory Faucet

Airstream Part #602859

Pfister - Model LF-042-PRKK

Faucet Cleaning and Care

All that is needed to clean your faucet is a soft, damp cloth. Airstream does not recommend the use of scour pads, cleansers, or chemicals. The abrasive nature of these substances could damage the faucet's finish. A non-abrasive car wax will help to protect the finish.

Electrical

Battery/12-Volt System Information

The major portion of electrical power in your Airstream is 12-volt. The 12-volt current powers all gas appliances for controls and/or ignition as well as lighting. An exception would be the range which has its own ignition source.

All 12-volt current comes through the battery system in the front of the trailer. The batteries are accessible in the battery box on the A-frame of your trailer. Power from the batteries goes to a set of Type 2 thermal breakers. The breakers are tied together by a brass bus bar. One breaker (30-amp) protects the 12-volt tow vehicle charge line coming from the 7-way cord. Another breaker (20-amp) feeds the trailer brakes breakaway switch located near the hitch coupler. A 50-amp breaker feeds the battery disconnect relay. The current leaves the relay and travels to the 12-volt distribution panel, located in the converter, and then to the rest of the trailer. Open the decorative door on the front of the converter to access the panel and its fuses. For more information, see Electrical Diagrams on page 8-18.

If you replace a blown fuse and it immediately blows again, do not replace the fuse again until a qualified service technician can correct the problem.

If the replacement fuse holds for a week or more and the gap in the fusible metal is barely melted apart, this usually indicates an overload condition. Reducing the number of lights or appliances used on that particular circuit at the same time could prevent any further fuse failure.

For important battery maintenance information, see Batteries on page 8-10.

Battery Disconnect Switch

The battery disconnect switch is used to separate the batteries from the 12-volt distribution panel and converter charging system.

When the switch is turned to ON and the trailer is plugged into an external AC power source, the 12-volt distribution panel will receive power from the converter and the batteries will be charged through the converter charging system.

When the switch is turned to OFF and the trailer is plugged into an external AC power source, the 12-volt distribution panel will still receive power from the converter, but the batteries are disconnected from the system. The batteries will not be drained with the switch in the OFF position. The converter will not charge the batteries with the switch in this position.

The charge in the 12-volt batteries can be replenished, depending on the tow vehicle, from the tow vehicle alternator through the 7-way cord. This charge will flow to the batteries regardless of the battery disconnect switch position. Likewise, if on or off, the solar panel is still charging the batteries.

Power Center

The power center is installed under the bed or below the refrigerator, depending on the model. Open the decorative door for access to 12-volt fuses and 120-volt breakers.

The power center's converter transforms 120-volt AC into 12-volt DC. The converter/charging system is the interior low voltage electrical system that enables you to use the interior lights, fans, pumps, and 12-volt appliances, whether operating on self-contained battery power or 120-volt city power. The 12-volt light bulbs give off the same light as regular household bulbs, so that when operating on self-contained battery power, everything works normally except the 120-volt convenience outlets and 120-volt appliances. The converter system is designed to maintain constant output voltages regardless of the variances that occur in city power systems.

⚠ WARNING

The power center is a centralized power switching, fusing, and distribution center. The potential for lethal electrical shock is present in this box. Inadvertent shorts at this box could result in damage and/or injury. All servicing of this box should be done by a qualified Service Technician.

⚠ WARNING

Disconnect/De-energize all main power service, shore power, generator power, and inverter power prior to servicing the breaker panel.

The power center features Auto-Detect, an intelligent battery detection system that evaluates the charging cycle of a battery, automatically determines the type of battery in use (lead Acid/AGM/Lithium), and then chooses the appropriate charging profile to provide the best performance and maintenance for that battery.

The converter is energized only when the trailer is hooked up to external AC power.

To test the converter, observe the following:

- Confirm 120-volt power is going into converter.
- Disconnect the 12+ wire from the switch.
- Using a voltmeter, check voltage output between heavy gauge positive and negative wires coming out of converter.
- The voltage should be within 13.6 and 14.0 volts. (The meter of the tester should be calibrated periodically.)
- If converter is not within these voltages, have it serviced by a qualified technician or replace it.

One of these wires is not spliced onto a wire of the same color. It is the backup wire that is yellow in the cable and black in the harness.

A label on the inside of the converter door lists the circuits and what each fuse powers.

12-Volt Power Circuits

The current in the converter system is 12 volts direct current (12 VDC) negative grounded. Power sources that supply 12 VDC current to the system are as follows:

- Main charge line from tow vehicle
- Trailer batteries
- Converter

The power sources listed above are all electrically connected to the 12-volt distribution fuse panel that distributes current to interior branch circuits. The circuits provide power to operate all 12-volt DC lights, pumps, motors, and appliances.

Power converter is a solid-state electronic power supply and is maintenance-free. It is so self-sufficient and quiet that you will probably not know it is working except for the fact that your batteries are always charged, and your 12-volt lights and appliances always work.

If any 12-volt appliance fails to operate, first check your 12-volt distribution fuse block, located behind the decorative front door in the front right-hand corner of the converter and inspect all fuses. If a fuse is opened or blown, replace it with the same size fuse (never install a larger fuse). If the fuse opens again, have an electrician or certified RV technician locate the circuit trouble. Replace blown fuses only with the same type and amperage size previously used.

If the power converter is not working, first confirm the RV supply or shoreline cord is plugged into a live circuit. Then check all the 120-volt breakers in your RV distribution panel to make sure they are on. If the breaker is tripped, follow instructions to reset the breakers. If the breaker trips again, consult an electrician or certified RV technician.

Converter Operation

The electronic power converter is designed to supply the nominal 12-volt-filtered DC power for all 12-volt-operated devices encountered in RV service. Although the converter is an excellent battery charger, the converter does not require a battery to be connected to it for proper operation.

NOTICE

When installing a battery (s), always observe polarity. Connecting a battery in reverse polarity will blow the power converter main fuses located on the 12-volt DC distribution fuse block.

120-Volt AC Panel Board

The AC panel board section contains the 120 VAC branch circuit breakers for your RV. One of the breakers controls the 120-volt power to the 12-volt converter section. This breaker may also control another branch circuit. Check the label next to each breaker for what each branch circuit breaker controls.

The 120-volt circuits may be turned on by setting their breaker handle up, to the ON position, or off by setting the handle down, to the OFF position. To reset the tripped breaker, move handle to OFF then ON.

The system incorporates GFCI breakers that implement an auto self-test functionality. When turned off, these breakers require external AC power to be present, or the AC inverter enabled, before they can be turned back on. If AC power is present from one of these two sources, and the breaker refuses to stay on consult an electrician or certified RV technician.

Fuses and Breakers

Breakers

The distribution panel was designed to use a 30 AMP 120Volt main breaker with branch circuits. Double breakers may be used for the branch circuits. Should a breaker become faulty replace with the same type breaker only. Use only approved circuit breakers and 12V fuses.

NOTICE

When replacing circuit breakers replace with the same type and rating as the original.

12 VDC Fuses

Each 12 VDC circuit in the distribution panel was designed for a maximum of a 20 amp automotive style fuse. Should one need to be replaced, be sure to replace it with the same type and Amp rating as originally supplied by Airstream. Replacing it with either a higher or lower Amp fuse could result in the panel not functioning properly.

REVERSE Polarity Fuses

The power converter is equipped with reverse polarity fuses, Should these fuses “blow” either during the manufacturing process or while connecting the battery, replace with the same type and rating fuse as originally provided with the equipment.

The power converter is not weather resistant nor designed for installation in wet locations. The power converter must be protected from direct contact with water.

Automatic Micro-Controller Operation

The power converters 3-stage switch mode is fully automatic. The converter senses which mode it needs to be in by checking the condition of the battery. The three modes include:

Absorption Mode: During this mode the converter output is in the 13.6 VDC range. This is the mode that the converter will function at normally. This mode provides the 12 VDC and the current required by the trailer.

Bulk Mode: In this mode, the output voltage of the converter will switch to 14.4 VDC range for a maximum of four hours. If the converter cycles between “Absorption and Bulk modes”, there could be a shorted battery cell or other issues.

Float Mode: If the trailer has not been used for a period of time and the shore power has been left plugged in, the converter will automatically go into float mode with a voltage of 13.2. When the converter senses a demand, by turning on lights, the converter automatically returns to absorption mode.

120-Volt Electrical System

City Power

When your trailer is hooked up to external AC power, the converter system automatically charges the trailer batteries with the battery disconnect switch in the USE (on) position and, if the 7-way cord is hooked up and depending on your vehicle, your tow vehicle battery as well. The speed and degree of charge depends on how much power is used for lights and appliances, as only the surplus goes to charging the battery. If you are making an extended stay, then you should keep your trailer hooked up to a 120-volt current if it is available.

While you are connected to external AC power, the wiring is protected by circuit breakers in the breaker panel. The circuit breaker panel for the 120-volt system is located in the converter. In the event of a failure of a 120-volt circuit, first check your trailer circuit breakers and the breaker for the outlet into which your trailer shoreline cord is plugged. If a breaker continues to trip after you have reset it several times, your circuit may be overloaded with appliances or there may be a short in the circuit. Try lessening the load on the circuit. Perhaps an electric griddle, hair dryer, or an electric heater can be turned off. If that does not solve the problem, consult an Airstream Service Center.

The 120-volt electrical system provides power to operate the air conditioner, converter, and 120-volt receptacles for portable appliances. The power is carded through the 120-volt city power flexible cord to the 120-volt distribution panel, and then is distributed to each appliance or receptacle. Exterior outlets for 120-volts are located on the curbside exterior wall between the wheels and above the wheel well.

All wire, components, and wiring methods conform to federal and state requirements.

Converter

The converter system is a transformer designed to maintain constant output voltages regardless of the variances that occur in city power systems. The design eliminates the need for complex electronic sensing systems to charge the batteries, minimizing the possibility of failures and greatly increasing its overall reliability.

In some older parks and other locations where three pronged outlets are not available, certain precautions to ensure proper grounding and polarity must be taken. These precautions are listed below:

1. Attach the three-pronged plug to a two-pronged adapter. The third conductor line of this adapter has a short wire lead, that must be grounded.
2. For proper grounding, connect the short ground lead to a grounded outlet box or to a cold water pipe. When no water pipe is available, drive a metal rod two feet into the ground and attach the ground lug to it, thus, providing the unit with proper grounding.

NOTE

When the three-pronged plug can be used, there will be no problems with proper polarity or grounding with a properly wired shoreline outlet.

NOTICE

When operating with city power, make certain that the service is 120-volt and not 240-volt.

To operate self-contained, simply disconnect the power supply cable.

Ground Fault Circuit Interrupter (GFCI)

Most states require trailers with exterior 120-volt receptacles and receptacles close to a water sources, such as a faucet, to have a ground fault-circuit interrupter. When properly installed, the GFCI circuit breaker provides reliable overload and short-circuit protection, plus protection from ground faults that might result from contact with a **HOT** load wire and ground.

⚠ WARNING

The GFCI circuit breaker will NOT reduce shock hazard if contact is made between a HOT load wire and a neutral wire or 2 HOT load wires.

Each GFCI circuit breaker is calibrated to trip with a ground current of 5 milliamperes or more. Since most persons can feel as little as 2 milliamperes, a distinct shock may be felt if the need for protection exists. However, the shock should be of such short duration that the effects would be reduced to less than the normally dangerous level. However, persons with acute heart problems or other conditions that can make a person particularly susceptible to electric shock may still be seriously injured.

While the GFCI circuit breaker affords a high degree of protection, there is no substitute for the knowledge that electricity can be dangerous when carelessly handled or used without reasonable caution.

⚠ WARNING

The GFCI circuit breaker will NOT reduce shock hazard if contact is made between a HOT load wire and a neutral wire or two HOT load wires. GFCI circuit breakers provide protection only to the circuit to which it is connected.

GFCI Breaker Test

Perform this test on the GFI circuit breaker each month and record the date.

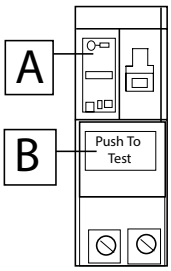

1. With handle A in “ON” position, press PUSH TO TEST button B.
2. Handle A should move to TRIP position, indicating that GFCI breaker has opened the circuit.
3. To restore power move handle A to “OFF” and then to “ON“

If the device remains on when the Test button is pushed, the GFCI is not working properly or has been incorrectly installed (wired improperly). If your GFCI is not working properly, call a qualified, certified electrician who can assess the situation, rewire the GFCI if necessary, or replace the unit.

NOTE

All GFCI breakers implement an auto self-test function, however, Airstream recommends a manual test be conducted every month.

Entertainment Systems

TV and Sound System

Your Airstream has a 12V flat-screen TV with an HDMI port (for adding a Bluray/DVD player or streaming device when internet access is available), and a radio with built-in Bluetooth. Please refer to the manufacturer’s information in your owner’s packet for instructions on their use.

TV/Radio Antenna

The roof-mounted TV/Radio antenna receives free Local VHF/UHF TV signals and FM radio signals. The signal is boosted to maximize signal strength and provide TV and radio reception.

The antenna booster is controlled by a switch on the antenna booster’s wall plate inside the media roof locker. Press the small pushbutton on the wall plate to turn **ON** the booster. To view cable or satellite, you will need to turn it **OFF**.

NOTE

The booster must be ON to receive an FM radio signal.

The antenna is constructed of durable automotive-grade plastic that is UV-protected, weatherproof, and capable of withstanding outdoor climates. Clean the antenna with mild soap and water only. Do not powerwash or use harsh cleaning solutions, solvents, or alcohol to clean the antenna or antenna base.

Airstream Connected, Wi-Fi

Your Airstream comes pre-wired to have an aftermarket Airstream Connected Wi-Fi kit installed. For more information, scan this QR code or visit https://www.airstream.com/connected/. Stay connected to the amenities you demand with a boosted Wi-Fi signal or a dedicated 4G LTE-A internet service (requires data plan activation). Contact your preferred dealer’s service department to schedule your installation.

Appliances

All appliances are delivered to Airstream Inc. with in-depth owner's manuals. Those manuals are included in the delivery case supplied by your dealer. The manuals may contain warnings, cautions, and operating instruction that should be read and followed before operating the appliances.

The information contained in the appliances manuals supersedes any information contained in the Airstream Trailer Owner's Manual on appliances. If you believe contradictory information on appliances is contained in this manual, or If any appliance manual(s) have not been provided with your trailer, contact your dealer, the respective appliance manufacturer, or Airstream Customer Service at 937-596-6111 or write:

Airstream Factory Service Center

428 W. Pike Street

P.O. Box 629

Jackson Center, OH 45334-0629

(937) 596-6111

⚠ WARNING

Airstream recommends shutting off the gas supply at the LPG tanks before refueling the tow vehicle or entering a refueling station.

Maintenance

Follow the instructions and warnings noted in the respective appliance and equipment owner's manuals, as well as those mentioned below.

Annual maintenance should be conducted on propane gas appliances and equipment by an authorized dealer or repair facility.

Insects can build nests in the burners of various appliances and equipment. The burner and burner orifice of the propane gas appliances and equipment should be cleaned out by an authorized dealer or repair facility anytime circumstances or conditions warrant, but no less than on an annual basis.

⚠ DANGER

Most LPG appliances used in recreational vehicles are vented to the outside of the vehicle. When parked close to a gasoline pump, it is possible that gasoline fumes could enter this type of appliance and ignite from the burner flame, CAUSING A FIRE OR AN EXPLOSION.

Air Conditioner

The roof air conditioner used on Airstream trailers is one of the most popular on the market today. In your owner's packet is a set of literature covering all operating and maintenance instructions. If the literature is misplaced, contact the air conditioner manufacturer or your Airstream dealer for replacement.

Proper voltage to the air conditioner is critical. A voltmeter check may find voltage much lower at a campground shoreline outlet than the needed 110 to 120 volts. Low voltage is usually associated with older or poorly maintained trailer parks. Parking your trailer so the power cord can be plugged into a receptacle close to the fuse or circuit breaker box can alleviate low voltage problems. Avoid extension cords and adapters whenever possible. If an extension cord must be used, it should be as short and heavy as possible to provide the most current.

If high temperatures are expected, make an effort to park in a shaded area. Starting the air conditioner early in the morning also helps. It is more efficient to hold a comfortable temperature than it is to lower the temperature after the interior of the trailer is already hot.

Never run your air conditioner with the vents closed. Doing so could cause the air conditioner to freeze and may damage to the unit. The manufacturer recommends having at least 3 vents open when running to prevent any chance of freezing up

NOTE

Review the air conditioning literature supplied in your owner's packet before proceeding.

Cooktop

There is little difference between the operation of home gas ranges and the trailer's cooktop. If, however, you are used to an electric range, operating confidence can be quickly gained by reading the manufacturer's directions provided in the owner's packet. Manufacturer's service and parts manuals are also available.

⚠ WARNING

An operation manual for the cooktop has been provided with your owner's packet. If this has not been provided with your trailer, contact the listed manufacturer to obtain. Their manual contains specialized warnings and cautions that should be reviewed prior to operating the appliance.

Ceiling Vent Fan

Review the vent fan manufacturer's instructions in your owner's packet before operating, cleaning, or servicing the fan. Follow the labeling on the fan to unlock, open, and change fan settings as desired. Certain models have a built-in safety switch that will not allow the motor to operate unless the dome is open approximately 3 inches or more.

The high-volume ceiling vent exhausts stale hot air and draws in fresh, clean air. To maximize airflow, close all other vents and open the window or door furthest from the vent fan.

NOTICE

For models with a locking knob, it may be necessary to slightly rotate the knob to properly align it to the lock. Do not use excessive force when operating the locking knob.

Cleaning Instructions

⚠ CAUTION

Never operate the fan with the screen removed and always disconnect power before cleaning or servicing. Review the vent fan manufacturer's cleaning instructions before cleaning or servicing the fan.

To clean the screen, turn the fan motor and battery disconnect switch OFF. The screen may be friction held or have retainer clips that need turned halfway to remove. Remove the screen and clean with a mild soap and water solution. Carefully pat dry with a soft cloth and reinstall.

NOTICE

The use of certain cleaners can cause cracking and product failure. Review the vent fan manufacturer's cleaning instructions before cleaning or servicing the fan.

Exhaust Vent

Operation

The bath exhaust vent (shown above) removes moisture from the air when using the shower. To operate, you first need to open the vent.

To open the vent, push the button on the handle to disengage the clip and slide the handle upward until the clip engages. Once open, turn the fan on by pressing the ON/OFF button.

Turn the fan OFF before closing the vent.

To close the vent, push the button on the handle to disengage the clip and pull the handle down until the clip engages in the lowered position.

NOTICE

Turn OFF the fan before closing the vent. Damage to the motor can occur if the fan runs with the vent closed.

Cleaning Instructions

⚠ CAUTION

Never operate the fan with the screen removed and always disconnect power before cleaning or servicing. Review the vent fan manufacturer's cleaning instructions before cleaning or servicing the fan.

To clean the screen, turn the fan motor and battery disconnect switch OFF. Remove the four retainer screws. Clean the screen with a mild soap and water solution only.

Fuse Replacement

To change the 5 Amp fuse:

1. Make sure the fan is off.
2. Remove the cap by turning it to the left to gain access.
3. Replace with a type GMA 5A fast-acting fuse.
4. Replace the cap to secure the fuse in the holder.

Furnace

The manufacturer of the furnace in your trailer has been well known in the RV industry for many years. The furnace burns LP gas, and is powered by 12-volt current from the batteries or power converter when plugged into city power. Operating instructions are located in your owner's packet. If they should become misplaced, new literature can be ordered direct from the manufacturer or your Airstream dealer. The manufacturer also offers a detailed service guide for your furnace.

⚠ WARNING

Carefully read all the manufacturer's instructions prior to operating. NEVER store flammable material next to the furnace or in close proximity to the furnace exhaust outlet on the side if the trailer.

NOTICE

If warranty service is required, use only a service location recommended by the furnace manufacturer or your Airstream dealer.

Thermostat

Follow the instructions provided in your Owner's Packet for operation of the thermostat.

Microwave Ovens

Refer to the Certified Performance Checkout sheet, included in your owner's packet, for manufacturer, model, and serial number information.

Monitor Panel

The display is the only system component that the user accesses. All user input to the display is done using the buttons along the bottom.

The display receives information from the individual sender pads via a single, two-conductor wire and displays the level information in percent of full on a three-digit LED display. When the front panel button for a particular tank is pressed, the display powers up and displays the level for that tank.

Sender pads are installed and stuck to the sides of the holding tanks. The sender pad scans the level through the tank wall using digital techniques programmed into the sender microprocessor.

NOTE

The 16' Bambi combination Black water/Grey water tank requires only the "Black" button to be pressed to view the current tank level. Pressing "Grey" will result in "OPn" being displayed.

To Read a Water or Sewer Tank Level

Press and release the button corresponding to the tank to be checked, and the display will show the levels in percent on the LED display. If no other button is pressed, then the display shuts off after about 5 seconds.

If another button (including BATT) is pressed before the 5-second time is up for the first button, the display will immediately switch to show the new level or voltage. The 5-second time-out is restarted every time a button is pressed.

To continuously display a reading, press and release the desired button, then press the same button again. The display will be on hold mode when the button is released, indicated by the decimal point on the right-hand side. While the display is in hold mode, it will recheck the level once per second so the user can watch the level change while the tank is filled or drained. The display will automatically shut off after 5 minutes in hold mode. To end the hold mode before the 5 minutes is up, press any tank button, and the display will shut off. By pressing two buttons at once, the diagnostic functions can be accessed.

To Read the Battery Voltage

Press the BATT button and release it; the display will show the battery voltage on the LED display. If no other button is pressed, then the display will shut down after about 5 seconds.

If the BATT button is held down, the display continuously rechecks the voltage and shows the updated value. The reading may flicker back and forth between two values.

If another button is pressed before the 5-second time is up for the BATT button, the display will immediately switch to show the value for the new button. The 5-second time-out is restarted every time a button is pressed.

There is no hold mode for the battery voltage.

Refrigerator

Your Bambi is equipped with a 12V refrigerator. Review all refrigerator literature supplied in your owner's packet or stored in the refrigerator prior to operating.

Operation

All units are supplied with a wide range thermostat designed to sense the evaporator temperature. The coldest position on the thermostat is reached by turning the knob to the right (clockwise); conversely turning the thermostat knob to the left (counterclockwise) yields a warmer setting. To turn the refrigerator off, turn the knob counterclockwise to the STOP/OFF position (in some refrigerators this is reached by turning the knob counterclockwise past the click).

Start up

Turn the power on and set the thermostat between 3 and 4, or near the center. You can make further adjustments to suit your personal requirements after the box has cooled down. Allow the refrigerator to come down to temperature before loading with product. Adding pre-cooled product will help keep the temperature stable when loading. Setting the thermostat to a higher setting will not decrease the time required for the unit to cool down to its normal operating temperature.

Defrost and Cleaning

The frequency of defrost is dependent on the number of door openings, the ambient temperature and the humidity level. Typically, it is a good practice to defrost once there is 1/8 to 1/4 inch of frost buildup on the evaporator (cooling plate). When defrosting, the unit is shut off by turning the thermostat counterclockwise to the STOP/OFF position (in some refrigerators this is reached by turning the knob counterclockwise past the click). Prop the door open. We suggest placing a towel in the bottom of the refrigerator to catch excess moisture.

Now that the unit has been defrosted, the interior can be cleaned with a non-abrasive cleaner. Do not use "Brillo" or "SOS" type abrasive pads, as they will score the surfaces. Baking soda is recommended.

NOTICE

Speeding up the defrost process with a knife or scraper is strongly discouraged due to the likelihood of rupturing the refrigerant circuit.

Solar System

If equipped, the rooftop solar panels installed on your Airstream help maintain battery health, reduce operating expenses, and extend the battery life of the batteries. The solar system's solar charge controller gathers energy from the individual solar panels and stores it in your batteries. The system features a display (shown above) that allows you to view live status information like solar watts and battery voltage.

To optimize solar charging, ensure the panels are clean and not shaded by trees or structures that might block the sun. Please refer to your owner's packet for reference material that discusses the solar system and its operation.

The charge controller is configured for a three-step charging process:

1. Bulk - The controller delivers as much charge current as possible to quickly recharge the batteries.
2. Absorption - The controller switches to a constant voltage mode.
3. Float - Voltage is applied to the batteries to maintain them in a fully charged state.

Airstreams with the factory-installed lithium battery option will have a SmartShunt that connects via Bluetooth® to the VictronConnect app on your smartphone (or tablet) to conveniently read out all monitored battery parameters, like state of charge, time to go, and historical information. For more information, see SmartShunt on page 8-11.

Airstreams manufactured without the solar option have been pre-wired to support solar panels. These units will have a 3-port rooftop-mounted plug-in that allows installing rooftop solar panels without running wires.

In addition, a quick plug-in port suitable for a portable solar charging kit has been pre-wired at the front of the unit near the battery box. Portable solar panel kits MUST include a solar controller that is set to the profile of the battery you chose for your Airstream, and cannot have an output of more than 10 amps. The solar port is fused at 10 amps in a holder in the battery box. For solar wiring, see Solar Panel Wiring on page 8-27.

NOTICE

Do not unlock or tamper with the MPPT Control system settings. Changes to the settings will negatively affect the system's performance and could damage your batteries.

NOTICE

The solar system is designed to assist with normal means of charging and to help slow battery discharge; it is not designed to charge a dead battery. If the battery is below 11.5 volts, it must be charged by other means.

Water Heater

Electronic Ignition

The Bambi is equipped with a continuous water heater featuring freeze protection, and direct spark ignition. The tankless water heater monitors inlet water temperature and flow, and output water temperature and flow. The water heater is controlled by the Control Center located on the wall above the bathroom sink. Turn on the power and press the temperature selection arrow to see current setting. Select desired temperature using the up and down arrow. Turn on the hot water faucet.

The switch used to light your electronic ignition water heater is located above the galley sink on 16' models and in the bathroom on all other models. Normally, the burner will ignite in just a few seconds unless your LPG system has not been used for some time and air has filled the lines. The system will go into safety lockout, after 3 failed ignition attempts, before the air is expelled. If this happens and error code of "E1" will appear on the screen. Turning the Water Heater off for 30 seconds and then back on reinstates the ignition mode system's.

Common Error Codes

- **E1**: Ignition failure of accidental flame off during ignition – Check that you have LP in the tanks, that other LP appliances work, and no debris or obstruction in the burner.
- **E2**: Flame sensing interrupted during normal operation, a buzzer will sound. Check that you have LP in the tanks, that other LP appliances work, and no debris or obstruction in the burner.
- **En**: System timer – System will shut off after 20 minutes of continuous usage
- **Fd**: Water heater operating in Winter Use – The water heater will run for a few seconds and then shut off in freezing conditions if the power is ON. This mode will only protect the Water Heater heat exchanger and not your Airstream's plumbing system.

⚠ WARNING

Review the water heater literature supplied in your owner's packet before proceeding.

NOTE

The water heater will not operate until a faucet is opened with a minimum water flow of .8 gallons per minute. This process could take up to 60 seconds to register.

NOTICE

The water heater has built-in FREEZE PROTECTION and will intermittently cycle the burner when the water temperature reaches 3°C/ 38°F. To provide this freeze protection, the gas supply must be on, gas must be available and electrical power must be on.

⚠ WARNING

This appliance does not have a pilot. It is equipped with an ignition device which automatically lights the burner. Do not try to light the burner by hand.

⚠ WARNING

It is dangerous to operate a Tankless Water Heater Unattended. This may occur accidentally if a sufficient leak develops or if a faucet is left open. For this reason the GSWH-2 will automatically shut off after running for 20 minutes and the display will show Error "En".

NOTES

AIRSTREAM®

Section 6
EXTERIOR

CLEANING 6-2
Exterior Skin 6-2
Windows 6-2
Aluminum Wheels 6-2
GENERAL INFORMATION AND OPERATION . . 6-3
Step 6-3
Main Door 6-3
Screen Door 6-3
Emergency Escape Windows 6-4
Front End Protection 6-4
Window Stone Guards 6-4
Shell Protection 6-4
Awning 6-4
Gravity Water Fill 6-5
City Water Hookup 6-5
Exterior Shower 6-5
Shoreline Power Inlet and Cordset 6-6
SmartPlug Inlet 6-6
SmartPlug Cordset 6-6
120-Volt Outlet and TV/Satellite Inlets 6-6
Axle and Running Gear Assembly 6-7
Hitch/Coupler 6-7
Power Jack 6-7
Power Jack Blade-Style Circuit Breaker . . 6-7
Manual Operation 6-7
Liquid Petroleum Gas (LPG) 6-8
Fill Valve 6-8
Automatic Gas Regulator 6-8
LPG Tanks 6-9
Exterior LPG Port 6-10
Basic Rules For LPG Safety 6-10
If You Smell Gas 6-10

Cleaning

Exterior Skin

We recommend the trailer be washed about every four weeks and waxed with Walbernize Super Seal, or high quality clearcoat-safe wax, in the spring and fall. In coastal and industrial areas, cleaning and waxing should be done more frequently. When traveling through winter weather, all road treatment chemicals should be removed immediately.

NOTICE

Abrasive polishes or cleaning solvents such as automatic dishwasher or acid etch cleaners are too strong and should never be used. Rinse all grit from surface prior to washing. Use soft rags or wash mitts, always moving lengthwise with the grain of the trailer (washing or polishing). Never rub hard on the coating. Even the softest rag will damage the coating if excessive pressure is applied.

NOTICE

Always clean your trailer in the shade or on a cloudy day when the aluminum skin is cool.

Oil, grease, dust, and dirt may be removed by washing with any mild non-abrasive soap or detergent. Cleaning should be followed by a thorough clean water rinse. Drying the unit with a chamois or a soft cloth may prevent spots and streaks.

After cleaning and drying, a good grade of non-abrasive automotive paste or liquid wax will increase the life of the finish, especially in coastal areas where the finish is exposed to salt air or in polluted industrial areas. It will also protect the shell from minor scratches and make subsequent cleaning easier.

It is important to remove substances such as sap, gum, resin, and asphalt as soon as possible by washing and waxing. Sunlight and time will bake-harden these materials, making them almost impossible to remove without heavy buffing. If asphalt remains on the trailer after washing, use a small amount of kerosene on a rag and wipe the spots individually, being careful not to scratch the finish.

If a substance is found on the coating that cannot be removed by normal washing procedures, Airstream recommends using DX 330 Acryli-Clean, made by PPG Industries. Follow all directions and warnings on the product container.

Acryli-Clean should be used by trained personnel only, using the proper equipment under controlled conditions. Use the Acryli-Clean as sparingly as possible to remove glue, tar, and other similar substance.

To keep your trailer looking new, paint the A-frame, LPG tanks, and rear frame periodically.

It is recommended that the caulking and sealant used in external seams and joints, such as end-shell segments and around window frames, light bezels, beltline and rub rail molding, etc., be checked once a year. If this material has dried out and become cracked or checked, or if a portion has fallen out, it should be replaced with fresh material to prevent possible rain leaks. Caulking and sealing products are available from your Airstream dealer.

Windows

Clean your trailer windows the same way you clean the windows in your home. Clean the seals with a damp cloth and mild detergent every three to six months. Do not use strong solvents, as they will damage the seals. A coat of natural silicone lubricant applied after the seal has dried, will keep it flexible. Spread the lubricant evenly with a brush or finger, working it into the surface. This is a good practice for all rubber seals in your trailer.

⚠ WARNING

Failure to properly clean and lubricate the window seals could result in the window sticking to the jamb. Window seals that become stuck to the window jamb should be released by a qualified technician trained in the procedure. Do not force, pry, or apply great pressure to open the window. Failure to heed this warning may cause the window to shatter and/or cause personal injury.

For replacement of a damaged window, contact an Airstream Service Center.

Aluminum Wheels

The aluminum wheels and axle end cover come treated with a clear-coating. Keep them looking good by washing with soap and water. Do not use abrasive cleaners or polishes on coated aluminum wheels.

General Information and Operation

Step

To operate the step, lift up on the front of the step and pull straight out until step locks into place.

⚠ WARNING

Never enter the trailer without lowering the steps. Always check that the steps are down before stepping out of the trailer. Once the steps are lowered, press down on them to make sure they are secure in their notches. Never travel with step lowered or extended.

Main Door

The main door of the trailer is manufactured with a built-in, keyed dead bolt and door lock. The door lock is engaged from the inside by a lever and the dead bolt is engaged by turning the knob.

A main door hold-back is mounted on the trailer's exterior side skin. The hold-back secures the door to the side of the trailer. When opening the door, push it gently into the spring-operated slide. To release the door, slide the hold-back bolt back.

If the door handle becomes inoperable and the door will not open from the inside, it can be opened by manually lifting the door latch release tab. Fold back the velcro adhered to the door frame to access the tab.

Lift the tab upward to release the latch and open the door. Use the photo (above right) as a guide to locate the tab.

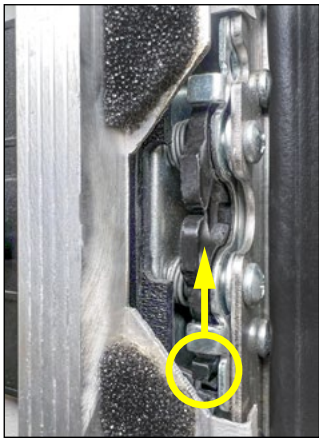

For lubrication and out-of-adjustment issues, see Main Door Care on page 8-17.

NOTICE

When towing, the door lock and dead bolt must be secured. If it is not locked, the constant vibration of travel may cause the door to open resulting in possible damage.

Screen Door

The screen door is secured to the main door by a slide bolt-type latch. It can be operated independently by releasing the slide bolt and swinging the screen door away from the main door.

NOTICE

Always reattach the screen door to the main door prior to closing the main door; otherwise, damage may occur.

Emergency Escape Windows

The emergency escape window is released by two red release handles found at the bottom half of the window. Once the window is unlatched, push out for clearance and escape.

Front End Protection

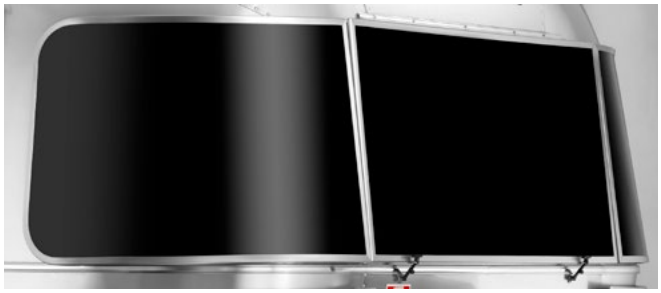

Window Stone Guards

The tinted solar plexiglass window stone guards on the front of your Airstream provide added protection from road debris while traveling and reduce the effects of sun rays.

Raise the center window guard to allow air to flow when the window is open. To raise, unhook the two rubber T-handles on the bottom of the guard, lift the guard to the desired height, and tighten the thumbscrews on each support arm. Be sure to lower and fasten the guard when high winds are approaching and before travel.

The corner window guards are removable for cleaning. Airstream recommends removing the corner guards from the unit when cleaning to avoid damaging the guards. There are two screws on each corner guard near the center guard. A quarter-turn will loosen the screws, and the guards will swing outward on their hinges. Lift the guards off the hinges to remove them.

NOTICE

Close all window guards before high winds and storm conditions approach or when towing to avoid damage to the trailer and window guards that cannot be covered by warranty.

Shell Protection

The front-end exterior shell corners have a 3M protective film covering. Stainless steel rock guards are available for aftermarket purchase and installation for added protection. Contact your Airstream Dealer for more information.

Awning

Follow the awning manufacturer's instructions in your owner's packet to set up your awning correctly, as shown above. As depicted, raise the rafter arm and hook it to the awning's roller shaft. Never hook the rafter arm to the spring-loaded snap stud of the main arm, as it may cause damage.

The awning's primary function is sun protection. Roll up your awning in case of heavy rain, wind, or snow. To prevent water buildup on the awning (during light rain), position one side lower than the other to create enough slope for adequate water runoff.

Clear tape is placed between the exterior skin and the awning fabric to prevent the awning fabric from rubbing on the coating, thus wearing through it. Inspect the tape every year or after a long trip. Have it replaced if it begins to wear thin.

NOTICE

The effects of wind and rain on any awning are unpredictable. If wind or extended periods of rain are expected, roll up the awning and secure in traveling position. Severe damage to the trailer and/or the awning may result and cannot be covered by warranty.

Gravity Water Fill

The gravity water fill is located on the side of the trailer, behind a locked compartment. It is used to fill the fresh water tank with potable water. A small vent is located next to the port to allow air to expel from the tank as it is filled.

Fill the water tank by inserting a high-pressure RV/Marine FDA approved drinking water hose of at least ½-in. diameter made from material that is tasteless, odorless, and non-toxic. It's a good idea to let the water run through the hose for a short time to flush it out. RVers sometimes fill their tanks with "home" water to avoid strange water that may be distasteful to them on short outings. Remember, the more water you carry in the fresh water tank, the less cargo carrying capacity you have for other items. The amount of water in the tank may be checked on the Monitor Panel.

City Water Hookup

The city water hook-up is located on the side of the trailer. For consistent water flow and plumbing line safety, an in-line regulator limits pressure to 50 PSI.

Use a tasteless, odorless, and non-toxic high-pressure hose of at least 1/2 in. diameter designed for RV use. The city water inlet is a standard garden hose thread. We suggest you carry two lengths of hose in order to reach hookups farther away than normal, plus, to have a spare.

After hooking up the hose and turning on the city water valve provided in the park, slowly open a faucet. There will be a lot of spurts and sputtering until all the air is expelled from the trailer system. If the water heater is empty, it will take some time before all the air is expelled and a steady flow of water occurs at the faucet. Once a steady flow is achieved at one faucet the others should be opened long enough to expel the air in the lines going to them.

Your plumbing system has a built-in pressure regulator to protect your lines and faucets from extremely high pressures on some city water systems.

Exterior Shower

Bambi units are equipped with an exterior shower. This shower consists of a shower hose, shower head, and water valves inside of a lockable exterior door. Water is supplied by the pump or city water hookup.

Shoreline Power Inlet and Cordset

SmartPlug Inlet

Your Airstream is equipped with a SmartPlug power inlet located on the roadside exterior. Prior to establishing a connection, review the SmartPlug Cordset instructions that follow.

Features of the SmartPlug include:

- Eliminates Overheating - Increased pin & clip surface area improves conductivity during high demand.
- Ease of Use - The unique plug body shape and push-in design ensure a proper connection.
- Multi-Point Locking System - Side clips lock the plug securely into the inlet, eliminating stress on the pins.
- Weatherproof Seals - Multi-fin silicone gaskets installed in the inlet cover and interior of the plug body eliminate moisture penetration.

SmartPlug Cordset

Before connecting power to your Airstream, plug the cordset (power cord) into the power pedestal and check the cordset's safe/unsafe LED indicator lights. If the red LED illuminates, do not plug the cordset into the SmartPlug inlet on your Airstream.

The cordset has a Reverse Polarity Indicator System with two LED indicator lights, one blue and one red. Reverse polarity occurs when connecting a cordset to a power pedestal that has the positive and negative leads reversed internally. A reverse polarity condition is unsafe, and it can damage an Airstream's electrical components.

Safe/Unsafe LED Signals:

- Blue ON, Red OFF - Normal Power, Safe
- Blue ON, Red ON - L1 and neutral are swapped in a reverse polarity condition, Unsafe
- Blue OFF, Red ON - L1 and ground are swapped in a dangerous reverse polarity condition, Unsafe
- Blue OFF, Red OFF - No Power

Many campgrounds provide less than 30 amp service, and your hookup may blow their fuse or circuit breaker. If this happens, reduce the load, replace the fuse, or reset the breaker.

⚠ WARNING

A reverse polarity condition is detected if the cordset's LED illuminates RED when connected to a power source. If this occurs, do not plug the cord into your Airstream. Reverse polarity is an UNSAFE condition that could result in bodily harm. It can also damage electrical components. This condition exists when the power pedestal is improperly wired.

120-Volt Outlet and TV/Satellite Inlets

An inlet for TV/Satellite and an outlet for a 120 volt receptacle is located on the curb side exterior and is labeled for your convenience. Your Airstream must be plugged into a shoreline power supply for the outlet to operate.

Use the TV/satellite inlet to connect your Airstream to a campground TV cable source or portable TV satellite antenna source for viewing.

Axle and Running Gear Assembly

Each rubber torsion axle is aligned during manufacturing, and double-checked on a random basis. Alignment after delivery is the customer's responsibility.

Hitting chuck holes or rough railroad tracks while traveling straight will only cause misalignment after the tire has struck such objects many times. Of course, a deep enough hole can affect the alignment immediately.

The worse culprit is a curb because they are normally struck at an angle. Rear axles are occasionally damaged when people are attempting to park beside a curb while backing up their trailer.

The trailer axle(s) is bent upward in the middle. This bend is normal and is how the camber is obtained. Also, toe-in is built into the axle by very slight bends in the axle tube on each end.

Tire wear indicates misalignment. Check with your dealer for the nearest location having the proper equipment to correct the trailer's alignment.

For Toe-In and Camber Specifications, see Rubber Torsion Axle Alignment Specifications on page 8-8.

Hitch/Coupler

The EZ-Latch coupler features a simple-to-use latching mechanism. Hooking up is as easy as dropping the coupler on to your hitch ball. Simply make sure that the coupler is properly lined up with the ball, then lower the coupler. The coupler will automatically open and latch into place when lowered onto the hitch ball. To disengage coupler, pull up on latch and raise coupler off of hitch ball. Return the coupler latch to the latched position to ensure that coupler is ready to be latched again. The coupler features a strong composite handle, If the handle does get damaged or becomes missing, the coupler is still completely operational until the handle can be replaced. Replacement parts can be purchased through your Airstream Dealer. See additional information included in your owner's packet.

⚠ WARNING

Always make sure coupler is properly attached and latched before towing.

Power Jack

The power jack is operated using the up/down switch on the power head. When the jack is fully extended or retracted, the internal clutch will activate.

- Use the jack for lifting the trailer only.
- Never get beneath the travel trailer when only the power jack supports it.
- Support the vehicle by appropriate means.

⚠ WARNING

Avoid the risk of injury to yourself and others. Keep hands and feet from under the foot plate when using the jack. Do not use or install dolly wheels on the power jack. Do not operate the toggle switch with the manual crank handle in place. Failure to comply could result in serious injury.

NOTE

When operating the power jack, pause briefly between switching up and down. Rapidly switching from up or down may cause the breaker to trip, momentarily interrupting power to the jack.

Power Jack Blade-Style Circuit Breaker

The jack is wired to the power center 12V distribution panel/fuse panel and is protected by an automatically resetting blade-style circuit breaker (example above). Should the breaker trip, allow time for it to reset and try operating the jack again. If the breaker does not reset or trips again, the jack may need to be serviced, or the breaker may need to be replaced. Refer to an authorized dealer for service. For maintenance information, see Power Jack on page 8-9. For breaker replacement, see Replacement Fuses on page 8-3.

Manual Operation

Should an electrical failure occur, the jack can be operated manually by unscrewing the bubble level/cap and placing the manual override handle into the alignment tube to engage the drive pin. Rotate the handle counterclockwise to raise or clockwise to lower the trailer.

Liquid Petroleum Gas (LPG)

Fill Valve

The LPG tanks are equipped with fill valve connections ***RV Type I Acme***. The large, green, nylon swivel nut is a right-hand thread and is designed for hand operation only.

The valve features an internal spring-loaded module that will not allow gas to flow from the cylinder until a positive seal has been made at the connection. The valve outlet has 1-5/16 in. Acme threads on the outlet exterior, and female POL, left-handed threads on its interior. This feature allows for connection of the new wrenchless, right-handed, Acme RV connection while still accommodating the standard left-handed POL fittings used for filling propane cylinders.

The mating, green swivel nut and brass nipple also incorporate new features: the green nylon nut swivels on a bushing that is heat-sensitive. Between 240 and 300°F, the bushing will yield (melt) allowing the spring-loaded module in the valve to push the brass nipple back (approximately 1/4 in.), closing the module and stopping the flow of gas from the cylinder. Inside the brass nipple is a flow-limiting device designed to sense excessive gas flow. If an excessive flow is sensed, the flow-limiting device shuts the flow down to a maximum of 10 SCFH (Standard Cubic Feet per Hour) or less. This is also referred to as the bypass flow.

Bypass flow is extremely important in the proper operation of this connection. The flow-limiting device may activate if the cylinder valve is opened quickly. When all appliances are off, the bypass flow allows the pressure downstream from the flow-limiting device to equalize. When pressure is equalized, the flow-limiting device will supply normal flow to the system. Equalization occurs in approximately 5 seconds and, in most cases, goes completely unnoticed. If, however, an appliance is left on or there is a leak or open flow in the system, the bypass pressure will not be able to equalize and allow the flow-limiting device to reopen.

Symptoms of this condition would be appliances that light but have lower than normal flame or starve out from lack of gas, a substantial reduction in the flame when another appliance is operating, or pilots that are difficult to light. If this should happen, the following steps should eliminate the condition:

1. Close LPG cylinder valve.*
2. Extinguish all flames and smoking materials.
3. Be sure all gas appliances, including their pilot lights, are off.*
4. Open LPG cylinder valve slowly. Do not snap open.
5. Wait at least 15 seconds before lighting appliances.
6. If operational difficulties continue, there may be a leak in the system. Immediately close the LPG cylinder valve and have the system inspected by a qualified RV service technician.

*When reconnecting a full cylinder to an auto changeover regulator, it is not necessary to shut off the appliances or close the valve of the cylinder already in service.

⚠ DANGER

Leaking LPG may ignite, causing a fire or explosion, which could result in serious bodily injury, property damage, and/or death.

How long a full tank of gas will last is dependent on usage. In cold weather when you are using the furnace, large amounts of hot water, and are doing extensive cooking, you will naturally use more gas than you will in warm weather when you may do limited cooking. On the average, with normal cooking and other appliance use, you can probably count on two to three weeks of service from each tank.

Automatic Gas Regulator

All models are equipped with a two-stage automatic change-over gas regulator that offers the convenience of automatic changeover from empty to full gas cylinders. Both tanks are connected to this regulator.

Make sure there is propane in both tanks before you start. Rotate the white knob on the top-front side of the regulator toward the cylinder you want to use first. This will be the **service** cylinder and the other will be the **reserve** cylinder. Slowly open both cylinders valves. Open both cylinder valves completely, then close about 1/4 turn. This will allow you to easily check to see if valves are open or closed. The indicator on top of the regulator will turn bright green. The indicator will stay bright green as long as there is fuel coming from the service cylinder. When the service cylinder empties, the regulator will draw fuel automatically from the reserve cylinder, providing an uninterrupted fuel flow to the system. When it switches over, the indicator will change from green to red. This red color indicates the service cylinder is empty and needs to be filled.

⚠ DANGER

LPG regulators must always be installed with the diaphragm vent facing downward. Regulators that are not located in compartments have been equipped with a protective cover. Make sure the regulator vent faces downward and the cover is kept in place to minimize vent blockage, which could result in excessive gas pressure, causing fire or explosion.

LPG Tanks

The following procedure outlines the proper method of removing and installing LPG bottles:

1. Turn the knob on your automatic regulator until the arrow points to the tank opposite the one to be removed. Shut off the gas valve on the tank to be removed.
2. Disconnect the rubber gas line at the tank to be removed. (The green plastic fitting is a right-hand thread and no tools should be used.)
3. Turn the large clamping T-handle counterclockwise until the hold-down bracket is loosened enough to be able to remove the tank. If your trailer is equipped with a gas tank cover, you must remove the T-handle and then remove the cover before removing the bottle

⚠ WARNING

Do not remove the center hold-down rod.

LPG Tank Installation:

1. Place the tanks in position on the A-frame and tank cross-member so that it rests on the upper collar of both tanks with the collar rims engaged in the grooves on the underside of the bracket. If your trailer is equipped with a tank cover, it should be positioned over the tanks next. Make sure the hold-down rod projects up through the hole in the shroud center bracket.
2. Replace the T-handle and tighten down until the tanks are held firmly in place.
3. Test fittings with liquid soap free of ammonia or chlorine, or products deigned for testing, such as Snoop® liquid leak detector.

If you have allowed both tanks to run out, air may have gotten into the lines. In this event, the air must be forced out through the lines by gas pressure before you will be able to light the pilots. Hold a match to the pilot of the appliance closest to the tanks until it lights and stays lit. Then move to the next-closest appliance, etc

⚠ WARNING

Your LPG tanks must be filled as directed by the tank manufacturer. Instructions are located on a decal near the fill valve. The decal must not be defaced.

⚠ WARNING

The LPG tanks are securely mounted on the front A- frame of your trailer. If these tanks must be removed for service or replacement, it is important that they be reinstalled correctly in order to prevent any possibility of their falling off or becoming dislodged during travel.

⚠ WARNING

Use only the LPG tanks furnished with your trailer. If replacement is required, it must be a bottle of the same size and design.

⚠ WARNING

Putting a lock on LP tank covers is not recommended because it may limit access to the valve and prevent the ability to shut off LP gas flow in an emergency.

Exterior LPG Port

An exterior LPG port quick-connect may be installed on the hitch A-frame of your trailer. An LPG supply line is shipped with the trailer in the loose parts box. This can be used to connect a lantern or other appliance that uses a one-pound, low pressure LPG tank supply to the exterior port.

To assemble, install a male quick-connect coupler to one end of the supply hose. Then add a flare fitting to the other end of the supply hose and install a one-pound tank coupler to the flare fitting. This assembly can be installed into the appliance in place of the one pound LPG tank.

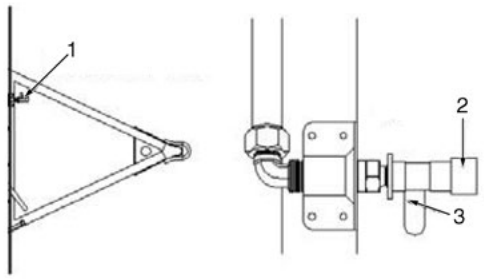

1. Exterior LPG Port
2. Quick-Connect Sleeve
3. Shutoff Lever

Basic Rules For LPG Safety

A warning label is displayed in the cooking area reminding you to provide an adequate supply of fresh air for combustion. The amount of oxygen supply in a trailer is limited due to its compact design. When using the cooking appliances, proper ventilation will prevent dangers of asphyxiation. It is especially important that cooking appliances not be used for comfort heating as the danger of asphyxiation is greater when the appliance is used for long periods of time.

⚠ DANGER

Do not use cooking appliances for comfort heating. Cooking appliances need fresh air for safe operation. Before operation, open an overhead vent or turn on an exhaust fan and open a window.

⚠ DANGER

A warning label has been located near the LPG container. This label reads: DO NOT FILL CONTAINER(S) TO MORE THAN 80 PERCENT OF CAPACITY. Overfilling the LPG container can result in uncontrolled gas flow, which can cause fire or explosion. A properly filled container will contain approximately 80 percent of its volume as LPG.

⚠ DANGER

Do not store LPG tanks within a vehicle. LPG tanks are equipped with safety devices that vent gas should the pressure become excessive.

⚠ DANGER

Portable fuel burning equipment, including wood and charcoal grills and stoves, shall not be used inside the recreational vehicle. The use of this equipment inside the recreational vehicle may cause fires or asphyxiation.

⚠ DANGER

Do not bring or store LPG tanks, gasoline, or other flammable liquids inside the vehicle because a fire or explosion may result.

Twice a year, or after a long storage period, we suggest you take your unit in for a checkup and cleaning of the gas-operated appliances.

If You Smell Gas

1. Extinguish any open flames, pilot lights, and all smoking materials.
2. Do not touch electrical switches.
3. Shut off the gas supply at the tank valve(s) or gas supply connection.
4. Open doors and other ventilating openings.
5. Leave the area until odor clears.
6. Have the gas system checked and leakage source corrected before using again.

AIRSTREAM®

Section 7
TOWING

TOW VEHICLE 7-2
BRAKES 7-2
Electronic Brake Controller 7-2
Proper Electric Brake Use. 7-2
Breakaway Switch. 7-3
LOADING 7-3
Weighing Your Trailer 7-4
HITCHING UP 7-4
7-Way Plug 7-5
Equalizing Hitch Load Distribution 7-5
Wireless Observation System 7-5
TOWING TIPS AND INFORMATION 7-5
Tracking Observation 7-5
General Information 7-5
Cooling System Overload 7-6
Downhill and Non-level Driving 7-6
Off-Road Towing 7-6
When Being Passed 7-6
Passing 7-6
Backing Up 7-7
Stopped On a Hill 7-7
Controlling Sway or Fishtailing 7-7
Equipment 7-7
Tongue weight 7-7
Driving 7-7
Corrective Measures 7-8
Sway Control Device 7-8

Tow Vehicle

When buying a new vehicle to tow your trailer, we suggest including towing options offered by most tow vehicle manufacturers. These include such things as a heavy-duty alternator and radiator, heavy-duty springs and shock absorbers, transmission cooler, heavy-duty fan and flasher unit, etc., for the make of the vehicle.

⚠ WARNING

Springs that are too stiff can hinder the action of the weight equalizing hitch and prevent the transfer of weight to the front of the vehicle.

NOTICE

Only use springs heavy enough to support your loaded vehicle (not including trailer). Having a too harsh spring rate on your tow vehicle will only shorten the life of the tow vehicle and trailer, and will cause your trips to be less enjoyable.

Transmissions may be manual or automatic, but an automatic transmission may prolong your tow vehicle's life and generally does a better job of controlling engine loads than does the average driver using a manual shift.

Having adequate power is very important when considering the purchase of a new vehicle or the trailer-towing capability of your present one. Auto dealers are provided with guidelines to use when helping a customer decide on a tow vehicle. Guidelines are not determined solely by the power output of the engine. The gear ratio of the differential is also a very important part of the guideline.

Inspect the tow vehicle's hitch regularly for loose bolts or nuts, cracked welds, loose ball mounts, worn parts, etc.

New trailerists often carry more food and other supplies than really needed. Remember that every item you take along is one more thing to stow and adds weight to the total load you must pull. Consolidate items in shelves, lockers, and in the refrigerator. It is better to have one full and one empty locker, than two half empty ones. Special care must be taken not to overload the front and rear ends of the trailer.

Brakes

All trailers are equipped with Dexter Nev-R-Adjust brakes. Please follow all maintenance procedures in the Dexter user's manual provided in the owner's packet.

Electronic Brake Controller

The trailer brakes are operated by 12-volt current from your tow vehicle and must be hooked up so you have an integral system with your tow vehicle brakes. To prevent problems and ensure satisfactory braking action, install an electronic controller in line with the brakes in your tow vehicle.

An electronic controller will synchronize the trailer brakes with your tow vehicle brakes. It is designed to apply the trailer brakes with your tow vehicle brakes. Your brake controller should be adjusted to provide for a slight lead of the trailer brakes over the tow vehicle brakes.

⚠ WARNING

Study all material provided with your particular brake control. If you do not understand the information, have the installer explain the information to you or call the manufacturer of the controller.

Proper Electric Brake Use

Proper synchronization of tow vehicle to trailer braking can only be accomplished by road testing. Brake lockup, grab, or harshness is quite often due to lack of synchronization between the tow vehicle and the trailer being towed, a too-high threshold voltage (over 2 volts), or under adjusted brakes.

⚠ WARNING

Never use your tow vehicle or trailer brakes alone to stop the combined load.

⚠ WARNING

The braking system should be checked and serviced by qualified, certified technicians only. Failure to do so could result in loss of control of your vehicle or the trailer, causing damage to property, injury, and/or death.

Breakaway Switch

In the event of an accidental separation of the tow vehicle and the trailer, the breakaway switch will set and lock the trailer brakes for a sufficient length of time to stop the trailer. The switch is activated when the wire attached to it and to the tow vehicle pulls out the small pin in the front of the unit.

When the trailer is connected to the tow vehicle, the breakaway switch loop should be attached to the permanent frame of your hitch. When disconnecting the trailer from the tow vehicle, remove wire loop from the frame. Do not remove the pin from the switch because this will apply the trailer brakes.

⚠ WARNING

Do not use the breakaway switch as a parking brake. If the battery should go dead, the trailer parking brake would no longer be applied. Failure to comply could cause damage to property, injury, and/or death.

Loading

When towing a trailer, you are subject to new and different challenges on the highway than you may have previously encountered. Towing a trailer is no small responsibility and should be undertaken with great care and safety first in mind. An accident with a tow vehicle and trailer can have much greater consequences than carelessness with a small car. Like an airline pilot who is responsible for expensive equipment and many lives, you should take your responsibilities as a tow vehicle driver very seriously and learn all you can about doing the job safely and well. Balancing the load and preparing the trailer and tow vehicle are critical to safe handling.

One of the most critical aspects of safely towing a trailer is knowing the weights involved and where they are placed. The first thing to determine is how much is being towed and confirming that it is within the capacities of the equipment being used. Determining where the load is placed is critical to the way your rig will handle on the road.

Know what your trailer weighs loaded. Load your trailer including water, propane, etc and take it to a public scales. Weigh each axle of your vehicle. Refer to your axle weight and tire limits to see if you are within a safe range; see Specifications on page 4-3. Total all axle weights, ensuring you are below the Gross Vehicle Weight Rating (GVWR).

Make sure your load is balanced. Do not load too much on one side. A balanced load is much easier to tow or drive. Front to back balance is also important. Step back and look at your trailer, making sure that there is not too much weight on the hitch, or on the rear of the trailer. Secure all items, as loose items can cause damage and become a safety issue. The Cargo Carrying Capacity tag shown below is installed on every trailer and can be found on the inside of the screen door on your trailer.

RECREATIONAL VEHICLE TRAILER CARGO CARRYING CAPACITY
VIN ################
THE WEIGHT OF CARGO SHOULD NEVER EXCEED
XXX kg or XXX lbs
CAUTION
A full load of water equals XXX kg or XXX lbs of cargo @ 1 kg/L (8.3 lb/gal)

Airstream weighs the trailer as finished to arrive at the trailer's weight. That number is subtracted from the GVWR of the trailer and listed under THE WEIGHT OF CARGO SHOULD NEVER EXCEED on the tag, The total weight of any and all cargo, including dealer modifications or additions, water, and propane should never exceed the number listed.

As cargo is added, removed, or shifts in location, the weight on the axle(s) and hitch will change. Also, the hitch and axle weights will change as a consequence of the weight of the LP tank(s) diminishing from use of propane, and/or the transfer of weight as a consequence of water in the fresh water tank being used and transferred to the grey and black tanks. In shorter units, rear bath models especially, when the LP tanks are empty and fresh water has been transferred to the grey and black holding tanks, the reduction in hitch weight may be significant. For this reason, we recommend that the grey and black water tanks be emptied before traveling.

When loading the trailer, keep the following in mind:

- GVWR
- Gross Axle Weight Rating (GAWR)
- Tire Weight Rating
- Cargo

⚠ WARNING

Never exceed these critical weight limits/ratings. Your safety depends on not overloading the trailer, axles, and tires

Never exceed these ratings. Your safety depends on not overloading the trailer, trailer axles, and tires. Refer to Section 4 - Floor Plan and Specifications for rating list.

Weighing Your Trailer

The illustration below shows how to weigh the trailer on scales.

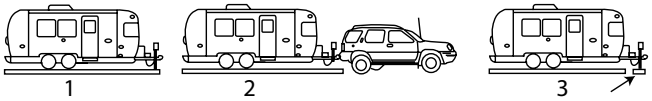

1. Trailer's total weight, cannot exceed GVWR.
2. Trailer's weight on axles cannot exceed GAWR.
3. Weight on trailer tongue.

To determine that the GAWR is not exceeded, it is necessary to load all of your allowable personal cargo and variable weights. Then hitch the trailer to the tow vehicle with load equalizing hitch properly adjusted.

Chock wheels and place the trailer on a scale with both axles only on the scale (see illustration). If the weight on the axles exceeds the axle system's GAWR, then some of the personal cargo must be redistributed forward in order to place some of this weight on the tongue.

The tongue weight should be 10 to 15% of the trailer's total weight, and must not exceed the tow vehicle's or the hitch's maximum weight rating. To determine tongue load, unhitch tow vehicle and place the tongue hitch post on a scale. The trailer must be properly loaded as determined above, with your allowable personal cargo and variable weights.

Use a scale, such as a bathroom scale, that has a lower weight limit than your tongue load, to check the tongue weight by using the following method (see illustration).

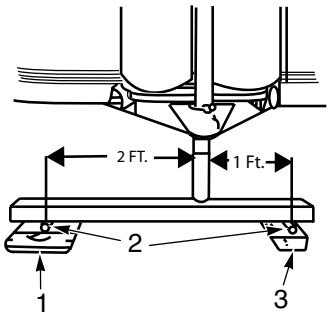

1. Bathroom Scale
2. Pipe
3. Wood Support

Place a piece of wood of approximately the same thickness as the bathroom scales on the ground in line with the trailer hitch jack as shown. It should be so spaced that a short piece of pipe or other round piece will lay exactly one foot from the centerline of the jack extension.

Place the scales so that another round piece can be exactly two feet from the centerline of the jack extension in the other direction. Place a 4 x 4 piece of wood on the two round pieces and screw the jack extension down on the top of the 4 x 4 until the tongue of the trailer is supported by it. Multiply the scale reading by three. This will be the tongue weight of your trailer. If you exceed the capacity of the bathroom scales, increase the two-foot dimension to three or four more feet, but always multiply the scale reading by the total number of feet between the wood and scales.

NOTE

Be sure trailer is level when reading scales.

Hitching Up

The process of hitching up your trailer is something that will become almost second nature with practice. The following section includes proper hitch load distribution. Proper training on connecting your trailer to a tow vehicle is essential for safety. Please see your dealer or other qualified personnel for instruction on the proper hitching of your trailer. Safety chain use on the hitch is required in all states.

⚠ WARNING

Always make sure coupler is properly attached and latched before towing, and that safety chains are properly attached. Safety chain use on the hitch is required in all states.

7-Way Plug

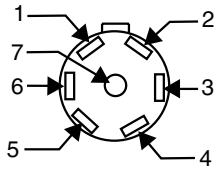

1. Black, 12-Volt (+)
2. Green, Clearance Lights/Taillights
3. Red, Left Turn/Stop
4. White, 12-Volt (-)
5. Blue, Brake
6. Brown, Right Turn/Stop
7. Blank

NOTE

The 7-Way Plug is spliced to the main harness in the area of the 12-volt distribution panel in front of the trailer.

Equalizing Hitch Load Distribution

When a trailer is properly hitched up to a tow vehicle with a load equalizing hitch, approximately 1/3 of the trailer's tongue weight will be on the trailer's axles and 2/3 will be transferred to the tow vehicle. One third of this weight transfer will be carried by the front wheels and 1/3 by the rear wheels of the tow vehicle (See illustration). Thus, the tire load of each wheel on the tow vehicle will be increased by 1/6 of the trailer's tongue weight. The tire air pressure of the tow vehicle should be increased to compensate for this additional weight. Refer to the vehicle's owner's manual for this information.

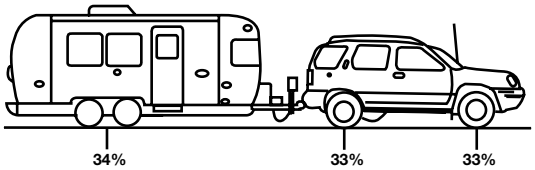

⚠ WARNING

The tongue weight should be approximately 10 to 15% of the trailer's total weight. Under no condition should it exceed the tow vehicles hitch rating. Please refer to the tow vehicles documentation for your vehicles hitch rating information.

Wireless Observation System

Your travel trailer is equipped with a Wireless Observation system consisting of a camera mounted at the rear of the trailer and a wireless monitor for your tow vehicle. This system will allow you to see what is behind you while towing and provide visibility when backing up the trailer.

⚠ WARNING

Carefully read and understand all manufacturer's instructions provided in your owner's packet prior to operating.

Towing Tips and Information

We want every Airstream owner to be a safe and courteous driver. A few hours of towing practice in a large, empty parking lot will make pulling your trailer over the road much easier. Mark off two corners of the parking lot for left and right turns. These corners may also be used to practice backing and parking.

Tracking Observation

Observe that the tracks made by the trailer wheels are distinctly different from those made by the tow vehicle. Studying this will make it easier for you to correct mistakes.

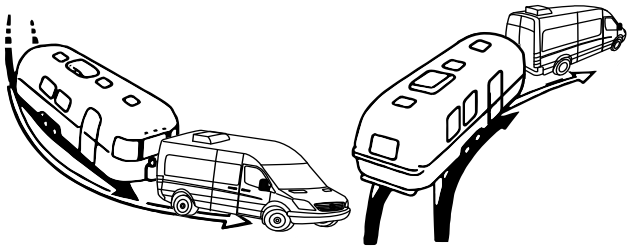

General Information

After thoroughly inspecting your hitch, brakes, and tires, you should be ready to tow. Check traffic, signal when you are about to pull away, and start slowly. Look often in your mirrors, and observe the action of the trailer, then carefully move into the proper lane of traffic. Remember that the trailer wheels will not follow the path of the tow vehicle wheels, therefore, wider turns are necessary when turning to the left or to the right.

⚠ WARNING

Truck or trailer type fender, door grip, and rear view mirrors are a must for maximum visibility and required by law in most states.

Cooling System Overload

When towing, you might encounter a temporary cooling system overload during severe conditions, such as:

- Hot days when pulling on a long grade
- When slowing down after higher speed driving
- Driving with long, idle periods in traffic jams

If the tow vehicle's temperature gauge, or indicator light indicates overheating, and the air conditioner is on, turn it off, pull over in a safe place, and apply the emergency brake. Increase the engine idle speed. Lift the engine hood and check for fluid leaks at the radiator overflow outlet. Ensure all drive belts are intact and the radiator fan is turning. If you have a problem, have it fixed at the next opportunity. If there is no problem, the light should go off, or temperature should come down within one minute. Proceed on the highway a little slower; resume normal driving after 10 minutes.

⚠ WARNING

Never open a radiator cap when the tow vehicle is hot. Check the coolant level when the vehicle is cool.

Downhill and Non-level Driving

When going downhill in dry weather, downshift so engine compression will slow the whole rig down. Take dips and depressions in the road slowly and do not resume normal driving speeds until you are sure that the trailer wheels are clear of the dip.

⚠ WARNING

On slippery pavement, do not use engine drag to help slow down as this may cause the rear wheels of the tow vehicle to skid. On icy pavement, drive slowly and, if you feel the tow vehicle skidding, gently apply the trailer brakes only. This will bring the tow vehicle and trailer back into a single line. Chains do not help trailer wheels.

Off-Road Towing

When driving in mud and sand, let the momentum carry the rig through. Apply power gently and use as little as possible. Stay in the tracks of the vehicle ahead and keep the tow vehicle in the highest possible gear. If you get stuck, it is best to tow out the entire rig together without unhitching.

When Being Passed

Despite the best hitch, you will notice that whenever a large bus or truck overtakes your rig, the displaced air first pushes the trailer rear slightly to the right and then affects the front. It may be necessary to steer very slightly, momentarily, toward the bus or truck to help compensate for the sway induced by the passing vehicle. Do not apply the vehicle brakes, as this can tend to exaggerate the situation. You may find, however, that briefly applying the trailer brakes with your manual control will help eliminate sway.

On a two-lane road, cars may line up behind you because you travel at a lower speed. It is both courteous and sensible, if you are able, to signal, pull onto the shoulder, and let them pass. Your trailer is designed to be towed easily at any legal speed, so if you are not careful, you may be inclined to forget it is there.

Passing

On freeways or expressways, pick the lane you want and try to stay in it. Always maintain plenty of space between you and the car ahead, at least the length of the tow vehicle plus trailer, for every ten miles per hour. Remember that in order to pass another vehicle you will need longer to accelerate. You must also allow for the length of the trailer when returning to the right hand lane.

Backing Up

When backing up, the important thing to remember is to do everything slowly and to correct immediately if you see the trailer turning the wrong way. Concentrate on the rear of the trailer. With your tow vehicle and trailer in a straight line, back up slowly and turn the bottom of the steering wheel in the direction you want the trailer to go. Watch out the window or in the mirror until the rear of the trailer is pointing in the desired direction. Your tow vehicle will be following the trailer in an arc. Straighten the tow vehicle and trailer by turning the steering wheel more sharply, and then, when they are in line, straighten the steering wheel.

Always try to back to your left because the visibility is much better. When you don't make it on the first try, it is usually much easier to pull forward to your original position and start over, or at least pull forward until the rig is straight, and then start backing.

If your spouse or traveling companion normally directs you when backing, they should position themselves forward of the tow vehicle so the driver can easily see them. Their directions should always indicate to the driver the direction the rear of the trailer should go.

A little practice in a parking lot, with the person giving directions, can save a lot of frustration when backing into a campsite.

Stopped On a Hill

Refer to the following warning if stopped on a hill for a prolonged period of time.

⚠ WARNING

Chock the trailer wheels when stopping on a hill or slope. Leaving your tow vehicle in gear is not enough for standstill safety. Do not use trailer brakes as parking brakes.

Controlling Sway or Fishtailing

Sway or fishtailing is the sideways action of a trailer caused by external forces. It is common for travel trailers to sway in response to strong winds, crosswinds, when passed by or passing a semi-tractor and trailer, or driving downhill.

⚠ WARNING

Excessive sway or fishtailing of your travel trailer can lead to the rollover of the trailer and tow vehicle. Serious injury or death can occur. It is important that you read and understand the information in this section.

Sway or fishtailing of your recreation vehicle can be controlled and is primarily impacted by four factors:

- Equipment
- Tongue Weight
- Driving
- Corrective Measures

Equipment

When hitched together, the trailer and the tow vehicle must be level. The tires of both the trailer and tow vehicle should be in good condition and properly inflated to their recommended pressures.

Braking is a very important factor in vehicle control; see Brakes on page 7-2 *and* see Electronic Brake Controller on page 7-2.

We recommend a friction sway damper or hitch with built-in sway control be provided for your unit. Please consult your dealer regarding this equipment. For more information, see Sway Control Device on page 7-8.

Tongue weight

For information about tongue weight, see Weighing Your Trailer on page 7-4 *and* see Equalizing Hitch Load Distribution on page 7-5.

Driving

This is the most important component. The tendency for the vehicle to sway increases with speed therefore, obey all speed limits and reduce speed during inclement weather or windy conditions.

Corrective Measures

If sway occurs, the following techniques should be used:

1. Slow down immediately, remove your foot from the accelerator. Avoid using the tow vehicle brakes unless there is a danger of collision. Reduce speed gradually whenever possible. If you can do so safely, use the brake hand controller to gently and progressively apply the trailer brakes. This will help to keep the vehicles aligned. Practice using the brake hand controller on a deserted parking lot. Do not wait until an emergency occurs before using it. Location of the brake hand controller is important and should be made easily accessible.
2. Steer as little as possible while maintaining control of the vehicle. Because of natural reaction lag time, quick steering movements to counter trailer sway will actually cause increased sway and loss of control. Keep both hands on the wheel. Hold the wheel as straight as possible until stability is regained.
3. Once the swaying is under control, stop as soon as possible. Check tire pressures, cargo weight distribution, and look for any signs of mechanical failure. Travel at reduced speeds that permit full control until the problem can be identified and corrected.

⚠ WARNING

Do not jam on the brakes or attempt to press on the accelerator to speed your way out of the fishtailing. Both actions make the situation worse and could cause severe injury or death.

Sway Control Device

Although Airstream has not intruded into the hitch manufacturer's field of expertise and performed formal testing, we find the vast majority of Airstream owners purchase sway-control devices.

When passed by large trucks or when exposed to sudden crosswinds, the trailer will be pushed and this action will be felt in the tow vehicle. It is our understanding that the sway control device will reduce the amount of movement, make towing more comfortable, and add some safety. Follow the directions of the sway control manufacturer when having the device installed and when using it.

AIRSTREAM®

Section 8
MAINTENANCE

MAINTENANCE SCHEDULE 8-2
SUGGESTED MAINTENANCE AND REPLACEMENT PARTS 8-3
Exterior Care 8-4
TIRES 8-5
Tire Changing 8-5
Jack Location 8-5
Tire Load and Inflation Information 8-5
Proper Tire Inflation 8-5
Underinflated Tires 8-6
How Overloading Affects Your Tires . . . 8-6
Weighing Your Trailer Or Towed Vehicle . 8-6
Tire Care 8-6
Tire Care Tips 8-6
Tire Inspection and Storage 8-6
Tire and Wheel Replacement 8-7
Choosing a Tire 8-7
Max Load Single vs. Max Load Dual . . . 8-7
Lug Nut Torquing 8-8
Spare Tire Carrier 8-8
Axles and Bearings 8-8
Rubber Torsion Axle Alignment Specifications 8-8
Wheel Bearing Maintenance 8-8
Brakes 8-9
POWER JACK 8-9
Power Jack Maintenance 8-9
Breakaway Switch 8-9
BATTERIES 8-10
Battery Capacity 8-10
Battery Maintenance and Storage 8-10
Lead Acid Batteries 8-10
AGM Batteries 8-10
Lithium Iron Phosphate Batteries 8-11
Lithium Battery Cold Weather Operation . . .8-11
SmartShunt 8-11
WATER PUMP 8-12
Water Pump Access Locations 8-12
Strainer Cleaning 8-12
FRESH WATER TANKS AND DRAINING 8-12
Drain Valves 8-12
Drain Valve Locations 8-13
Opening and Closing Valves 8-13
Fresh Water Tank Draining 8-13
Sanitizing 8-13
BLACK AND GRAY WATER TANK DRAINING . .8-14
Black Water Tank Dumping 8-14
Black Water Tank Flush 8-15
Drain Systems Cleaning 8-15
WINTERIZING AND STORAGE 8-15
Winterization Procedure 8-15
Restoring Service After Winter 8-17
MAIN DOOR CARE 8-17
Lubrication 8-17
Adjustment 8-17
Tambour Track Maintenance 8-17
WINDOWS 8-17
Sticking Windows 8-17
ELECTRICAL DIAGRAMS 8-18
FRESH WATER LAYOUTS 8-28
FAQS AND ANSWERS 8-32

Maintenance Schedule

⚠ WARNING

Failure to maintain your trailer can cause premature and unexpected parts breakage and/or erratic operation that may be hazardous.

NOTICE

See appliance manufacturer's literature for further information.

Every 1,000 miles or 60 days	
Escape Window	Check operation of latches and upper hinge.
Battery*	Check water level, lead acid only.
Smoke Alarm, CO Detector	Test and replace battery as required.
Tires	Check tire pressure, see Specifications on page 4-3.
Hitch	Check for loose bolts or unusual wear.
GFI Circuit Breaker	Test and record.

* As a battery ages and becomes less efficient, the water level should be checked more often and replenished only with distilled water. Checking water level does not apply to Glass Mat Batteries.

Every 5,000 miles or 90 days	
Main Door Latch	Lubricate with dry graphite
Exterior Door Locks	Lubricate with dry graphite.
Exterior Hinges	Lubricate with light household oil.
LPG Hold-Down	Lubricate with light household oil.
LPG Regulator	Check bottom vent for obstructions.
Wheel Lug Nuts	Torque to specifications, see Specifications on page 4-3
Breakaway Switch	Pull pin and lubricate with household oil, see Breakaway Switch on page 8-9
7-Way Plug	Spray with contact cleaner.

Every 5,000 miles or 90 days	
Hitch Ball	Lubricate with hitch ball lube or wheel bearing grease.
Exhaust Fans	Clean fan blades and wash filter.
Roof Vent Elevator Screws	Lubricate with light household oil.
Main Door Step	Lubricate and inspect moving parts.

Every 10,000 miles or 6 months	
Brakes	Inspect or replace as necessary.
Wheel Bearings	Clean and repack (Units less than 25 ft. only).
Tires	Inspect and rotate.
Spare Tire Carrier	Lubricate moving parts.
Windows, and Door Seals	Clean with mild detergent and apply 303 Aerospace Protectant.
Exterior	Wax.
Escape Window	Lubricate latches with WD-40 or light household oil.

Every year	
Battery	Clean, neutralize, and coat terminals with petroleum jelly.
LPG Tanks	Have purged by LPG supplier.
Seams	Check and reseal exterior seams, windows, lights, and vents as needed.
Hitch Coupler and Ball	Ensure all parts operate freely. Replace any component if worn or damaged.
Interior Cabinetry	Visual Inspection of latches Locks, Hinges and Slides. Silicone Spray as needed.
Power Jack	Inspect and lubricate; see Power Jack on page 8-9

Suggested Maintenance and Replacement Parts

Part numbers listed are Airstream part numbers and can be ordered by calling a certified Airstream dealer.

⚠ WARNING

Always replace the bulb or light fixture with the correct bulb for that light or matching fixture. Failure to heed this warning could cause fire, property damage, personal injury, or death.

Exterior 12-Volt Lighting	
License Plate LED light	PN – 514065-01
Amber LED Clearance Light	PN – 512859
Red LED Clearance Light	PN – 512860
Step Light LED	PN – 514162
Convenience Light (Dump Valve)	PN – 513752
NOTE: Most Exterior Lighting is LED and a replacement fixture will be required.	

Interior 12-Volt Lighting	
LED Light w/Switch	PN – 513707
Lean Light, LED, Salvinco	PN – 514256-02
LED Shower Light	PN – 513961
NOTE: Most Interior Lighting is LED and a replacement fixture will be required.	

Replacement Fuses	
1 Amp Blade Fuse	PN – 500773-01
15 Amp Blade Fuse	PN – 500773-15
20 Amp Blade Fuse	PN – 500773-20

Replacement Circuit Breakers - USA Breakers	
Breaker, Blade-Style, 30A (Power Jack)	PN – 514198-01
Breaker, Bryant, 15-15 Amp	PN – 510564-03
Breaker, Bryant, 20-20 Amp	PN – 510564-04
Breaker, Bryant, 30-20 Amp	PN – 510564-05
Breaker, Bryant, 15 GFCI Amp	PN – 510564-07
Breaker, 12V DC Type II, 20 Amp	PN – 510947-20
Breaker, 12V DC Type II, 30 Amp	PN – 510947-30
Breaker, 12V DC Type II, 50 Amp	PN – 510947-50

Replacement Rivets							
	Interior		Exterior			Underbelly	
Part Number	330127-05	330127-08	330126-02	330126-03	330126-04	330034-100	330038
Rivet Name	AD45ABS	AD48ABS	SSD43SSBS	SSD44SSBS	SSD45SSBS	AD68ABSLF	AD54ABSLF
Head Style	Dome Head	Dome Head	Dome Head	Dome Head	Dome Head	Large Flange	Large Flange
Body Diameter (Inches)	0.125 (1/8)	0.125 (1/8)	0.125 (1/8)	0.125 (1/8)	0.125 (1/8)	0.187 (3/16)	0.156 (5/32)
Hole Size	0.129-0.133	0.129-0.133	0.129-0.133	0.129-0.133	0.129-0.133	0.192-0.196	0.160-0.164
Drill Number	30	30	30	30	30	11	20
Grip Range In (Inches)	0.251-.312	0.376-0.500	0.126-0.187	0.188-0.250	0.251-0.312	0.376-0.500	0.126-0.250
Length Under Head (Max. Inches)	0.453	0.640	0.337	0.400	0.438	0.690	0.415
Head Diameter (Nominal)	0.250	0.250	0.250	0.250	0.250	0.625	0.468
Head Height (Max. Inches)	0.040	0.040	0.040	0.040	0.040	0.092	0.075
Typical Sheer Strength (lb.)*	155	155	520	520	520	85	225
Typical Tensile Strength (lb.)*	235	235	600	600	600	135	350
*Values shown are a guide only and may vary depending upon the application.							

Replacement Filters	
Air Conditioner, LH or RH	PN – 690323-470

Interior Touch-up	
Seam-Fil, White Cypress	PN – 360301-22
Seam-Fil, Grey Slate	PN – 360301-22
Fil-Stik, White Cypress	PN – 360406-02
Fil-Stik, Grey Slate	PN – 360406-03
Stain Marker, White Cypress	PN – 365504-08
Stain Marker, Grey Slate	PN – 365504-11

Exterior Care

The following exterior care products are recommended by Airstream. Read and follow label directions. Exterior sealant should be checked and resealed once a year.

Walbernize Super Seal (PN - 28433W) - Use to clean and polish while depositing a reflective, water-proof, glaze finish. Recommend two applications a year.

Acryl-R Seam Sealer (PN - 28430W-01 [16 oz can-Gray]) - Use anywhere a fine bead of gray sealant is required.

AdSeal Premium Quality Sealant Adhesive (PN - 365330-01 [10 oz tube-White]) - Use anywhere a thicker bead of White sealant is required.

AdSeal Premium Quality Sealant Adhesive (PN - 365330-02 [10 oz tube-Gray]) - Use anywhere a thicker bead of gray sealant is required.

AdSeal Premium Quality Sealant Adhesive (PN - 365330-04 [10 oz tube-Black]) - Use anywhere a thicker bead of Black sealant is required.

Sikaflex 221 Multi-Purpose Polyurethane Sealant (PN - 360180-04 [10 oz tube-Black]) - Use to seal below the rubrail, or anywhere a thicker bead of black sealant is required.

Tires

Your trailer is equipped at the factory with name brand trailer tires. Most Airstream dealers cannot make adjustments to tires. An Airstream, or tire dealer that handles that particular brand, must do this. If you experience tire problems, contact the nearest dealer.

Tire Changing

To change a tire with a jack, see the label affixed to the underbelly located to the rear of the wheels. This label reads **JACK** with an arrow pointing to a plate riveted to the mainframe rail where the jack head must be placed.

Jack Location

NOTE

Airstream does not supply a jack with the trailer.

⚠ WARNING

Do not exceed the maximum speed rating of the tires installed on your trailer. Failure to heed this warning could cause catastrophic tire failure resulting in property damage, personal injury, and/or death. Refer to the Tire Safety Information Addendum in your Owner's packet for more information.

⚠ WARNING

Never attempt to change any tire on the trailer without securely chocking the trailer's remaining wheels. Never position yourself in a manner where a raised trailer can come down on you if it should become dislodged from a jack or ramp.

⚠ WARNING

When removing aluminum-forged wheels from spindle, it is very important to mark them to ensure the wheel is placed in the same position of the drum when reinstalling. If the aluminum-forged wheel is to be mounted on a different drum, it is important to sand all loose corrosion from the mating surfaces.

⚠ WARNING

WHEEL SEPARATION CAN OCCUR:

1. **When removing/reinstalling wheels: torque lug nuts at the beginning of the first trip, and at 5, 25, and 50 miles.**
2. **Thereafter, check lug nuts before each trip.**
3. **Following winter storage, check lug nuts before beginning a trip**
4. **Following excessive braking, inspect and torque.**

⚠ WARNING

Use a torque wrench to tighten lug nuts. Tightening by hand or with an impact wrench is not recommended. For lug nut torque values, see Specifications on page 4-3.

Tire Load and Inflation Information

Maintaining proper tire inflation pressure is essential for both tire safety and performance.

Proper Tire Inflation

The level of air in your tires affects your vehicle's overall performance. A maximum inflation pressure specification is found on the trailer's exterior on a metal tag riveted to the lower front, roadside of the trailer, as well as on the original equipment tires.

Air pressure should be checked based on the load on each individual tire. Cold Inflation Pressure should be adjusted to handle the maximum tire load, and all tires on the axle should carry the same inflation pressure. *Cold tire inflation pressure* is the tire pressure checked in the morning before you drive more than a few miles or before rising ambient temperatures or the sun's radiant heat affects it.

Underinflated Tires

Underinflation brings a higher risk of damage due to road hazards, reduce casing durability, cause a loss in fuel economy, and will result in uneven or irregular tire wear. Severe underinflation brings about an increased risk of tread separation, handling difficulties, and possible tire failure, caused by overheating.

When minimum inflation pressure requirements are not met, tire durability and optimum operating conditions are compromised. Tire inflation pressure should always meet the guidelines for vehicle weight.

Observe the following:

- It may be necessary to inflate your tires at a truck stop or truck service center in order to achieve adequate air pressure for your trailer's needs.
- Only permanent air seal metal valve caps should be used.
- Be safe - if a tire has been run in a 20% underinflated condition, it must be dismounted and inspected by a trained professional. It should not be aired up without a full inspection or without using a safety cage. Use a calibrated gauge. If your tire is rated for higher inflation pressures, a special gauge will be required designed for larger tires.

⚠ WARNING

Due to RISK OF EXPLOSION damaged tires or tires run with more than a 20% underinflation (approximate) must be dismounted, inspected by a qualified technician, and should not be inflated without using a safety cage.

- Do not bleed air from warm tires to reduce pressure buildup.
- Do not inflate tires to cold PSI rating beyond rim specifications.

How Overloading Affects Your Tires

Tire pressure is what enables your trailer tire to support loads, thus, overloading can have serious consequences. Too much weight can cause stress on the suspension system components, brake failure, handling and steering problems, irregular tire wear, and possible tire failure. If you discover that your tires cannot handle the load, lighten the weight of the load on your tires.

Weighing Your Trailer Or Towed Vehicle

Since a trailer or towed vehicle adds to the load on the tires, it is crucial to properly weigh towed vehicles; see Loading on page 7-3 and see Weighing Your Trailer on page 7-4

Tire Care

The most important function of tires are to provide traction while moving, and grip when steering or stopping. The tires on your trailer are designed for highway use and must be properly maintained in order to maximize tire life, as well to provide a safe mode of transportation.

Tire Care Tips

To reduce the risk of tire failure, we strongly recommend the following:

1. Check the pressure in your tires, including your spare, at least monthly when the tires are cool (after the vehicle has stopped three hours and then driven less than one mile). Do not reduce pressure when tires are hot. Use a tire gauge to check pressure and maintain it at the recommended level.
2. Never overload your tires. Heed the maximum load-carrying capability of your tires.
3. Check your tires frequently for scrapes, bulges, separations, cuts, or snags resulting from use. See your tire dealer immediately if any such condition is discovered.
4. Never operate your vehicle in excess of lawful speeds or the maximum speeds justified by driving conditions, or in excess of speeds recommended for the tires you are using.
5. Make every effort to avoid running over objects that may damage the tire through impact or cutting, such as chuck holes, glass, metal, etc.
6. Never drive on smooth tires. Tires should be removed when 2/32 in. of tread depth remains. In most states it is illegal to drive with less than 2/32 in. remaining tread depth.
7. Park out of the sun whenever possible when in warm climates. In desert regions, use tire covers to prevent ultra violet light deterioration to tires.

Tire Inspection and Storage

Before taking your trailer on a trip or when removing it from an extended storage period, make it a practice to inspect the overall condition of your tires. Check for any type of condition or damage that might result in failure. A thorough check should include both inside and outside sidewalls, tread area and the condition of hardware such as valve stems, valve caps, and wheels. The tread should be checked for any unusual wear, cracking, penetrations and/or cuts. An uneven wear pattern can indicate misalignment or worn suspension parts.

Since many RVs are used seasonally and sometimes stored for extended times, it is possible that tires will take many years to wear out. Tires, as any rubber product, will age over time. If tires show cracking in the sidewall or tread surfaces that are more than 2/32 in. deep, they should be replaced before your next trip or vacation. Store your RV in a cool dry area away from major heat sources and extreme cold. An enclosed storage area is best with no exposure to electromagnetic sources such as generators or transformers. If you must keep your trailer outside, cover your tires from direct sunlight. Take your trailer to your tire dealer for service to check or correct any of these conditions.

Tire and Wheel Replacement

It is possible to replace your tires with a different size, in some instances, to increase your load capacity with a different inflation pressure. If there is a reason to replace your tires with a different size, make sure the following checks are made before the purchase:

- Does the replacement tire have the load capacity that is needed for my trailer and will it fit properly inside the wheel well?
- Will the overall diameter difference affect the braking system?
- Is the increase in air pressure compatible with the maximum rated pressure stamped on the rim?

Most trailers are towed at or near maximum loads during hot weather and then left idle for months. In normal use, oils in the tire come to the surface during flexing and protect the rubber from ultraviolet light. But when the trailer tires sit idle too long, natural aging may cause the rubber to crack prematurely, especially in the sidewall area. Trailer tires over five years old should be inspected by a tire expert for cracking and replaced even if it has no apparent tread wear.

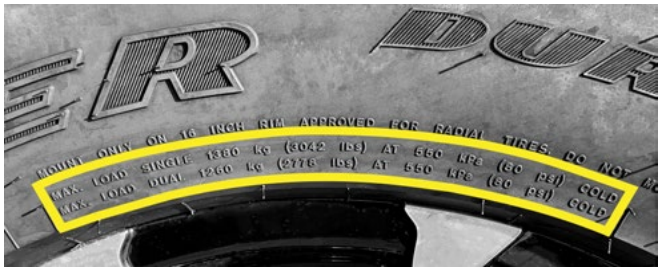

Choosing a Tire

Every tire sold in the United States has a tire rating stamped on the sidewall that shows a tire's maximum load at a defined pressure. Use the example above to help locate the max load rating in pounds (lbs) and tire pressure in pounds per square inch (psi) on your original equipment tires. Choose a tire with equal load ratings. For tire size, inflation and load specifications, see Specifications on page 4-3.

Max Load Single vs. Max Load Dual

Max Load Single refers to the tire rating for applications with only one wheel on each end of a single axle. *Max Load Dual* refers to the tire rating for dually wheels, where there are two wheels on each end of an axle for a total of 4 wheels on a single axle.

Don't confuse the terms Single and Dual with Tandem. A tandem axle refers to trailers with two axles, one behind the other.

For Airstream Travel Trailers, refer to the Max Load Single rating.

⚠ WARNING

Do not mismatch wheels and tires.

Axle systems are installed with hubs and drums that are compatible with many wheels used in the recreational vehicle industry that have matching bolt patterns. If the original manufacturer-installed equipment is in need of replacement, the wheel manufacturer should be contacted for proof of compatibility prior to replacement and use.

Customers replacing original equipment that has not been tested for compatibility must ensure the replacements are compatible to the hub and drum assembly installed. Such elements of compatibility include, but are not limited to:

- Diameter of the hub-mounting surface.
- Stud length and diameter.
- Location and number of studs.
- Center hole diameter for the wheel.
- Wheel-mounting offset from the rim center.
- Rated capacity of the wheel.
- Wheel fastener torque.
- Wheel nut size and shape.
- Impact of any added wheel accessories (such as decorative center caps) that could affect proper seating of the wheel to the hub surface.

Refer to the following table for wheel specifications.

Wheel Specifications		
Size/Center Size In Inches	Lug Pattern	Model
15 x 6 / 5.5	6	All Models
All wheels have zero offset.		

Lug Nut Torquing

Trailer wheels must carry much higher loads per wheel than passenger car or truck wheels. Each wheel may carry 1000 pounds and higher. Furthermore, wheels on tandem axle trailers do not steer, and are subjected to very high side load stress whenever the trailer makes a tight turn. When going around corners, especially on slow, tight turns, the wheels are subject to very strong side loads. This tends to flex the wheel and gradually loosen the wheel nuts. Although the materials and manufacturing methods are maximized for this kind of service, these extra loads can cause stress, which can result in flexing and loosening of wheel nuts.

Before each trip and any time a wheel is replaced, be sure to tighten the wheel nuts, following one of the lug-pattern sequences shown below. If the wheel was replaced, check the torque every 5, 25, and 50 miles.

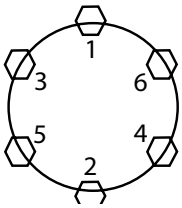

If you notice wheel wobbling, or hear a rattling sound coming from a wheel, especially at low speeds, a wheel lug nut may have come loose. This problem is usually caused by improper tightening, or by faulty or damaged lug bolt threads.

If suspicious of a loose lug nut, safely stop vehicle as soon as possible. Put up warning devices and check the tightness of all the lug nuts. Tighten all lug nuts to the specified torque, using a torque wrench. If stud threads are damaged or faulty, get professional service help.

⚠ WARNING

Use a torque wrench to tighten lug nuts. Tightening by hand or with an impact wrench is not recommended. For lug nut torque values, see Specifications on page 4-3

Spare Tire Carrier

The spare tire for Airstreams is stored under the front of the trailer. The front handle of the tire carrier is a 1-in. tube protruding out from under the front A-frame on the curbside. It is secured by a bracket and bolt along the inside of the A-frame rail. Removing the bolts allows the front on the tire carrier to be lowered and the spare tire to be removed.

⚠ WARNING

The spare tire carrier is designed to carry an undamaged tire and rim assembly of the type and size specified for the trailer. Never place a severely damaged wheel assembly with a damaged partial tire, or a rim only, in the carrier.

Axles and Bearings

NOTE

Never allow heat to be applied to the axle tube because the rubber providing the spring torsion action will be severely damaged.

Rubber Torsion Axle Alignment Specifications

Toe-In and Camber Specifications	
Toe-In each side 1/16 in.	Tolerance 1/8 in. + or -
Camber each side 3/4 degrees positive	Tolerance 3/4 degrees + or -

Wheel Bearing Maintenance

1. Jack trailer at marked jack location pad behind axle on mainframe,
2. Remove hubcap or spindle cover, wheel and tire.
3. Remove cotter pin.
4. Remove dust cap.
5. Remove spindle nut and washer.
6. Remove bearings and hub.
7. Lay down hub with inside grease seal down. Knock out inner bearing and grease seal using wood or plastic dowel and hammer.
8. Clean all parts thoroughly with kerosene.
9. Check all bearings and races for chips or roughness of any kind. Any damaged component must be replaced.

10. Pack bearing with a good grease (No 2 grade-265 ASTM penetration or equivalent).
11. Install inner bearing.
12. Install new grease seal in hub or rotor using wooden or rawhide mallet.
13. Install hub and drum on spindle.
14. Install outer bearing.
15. Install washer and spindle nut.
16. While rotating the wheel, tighten the spindle nut with a 12” wrench until there is a slight tension. Then back off one notch and install cotter pin. There should now be from .001” to .010” end play in hub. If not, back off one notch.
17. Check the lug nuts at 5, 25 miles and recheck at 50 miles of travel. For torque specifications, see Specifications on page 4-3.

When packing bearings by hand, place a glob of grease in the palm of one hand and push the large end of the bearing down into the grease. Keep turning the bearing around and forcing it down through the grease until the grease is extruded up through the opposite end. Wipe the extra grease in your hand around the outside of the bearing. It is not necessary to fill the hub and dust cap with grease.

Brakes

Due to normal brake lining wear, the brakes and the controller setting should be checked every six months or 10,000 miles, whichever comes first.

Power Jack

The power jack manufacturer’s owner’s instructions and parts list can be found by scanning this QR code and navigating to the instructions on Barker’s website at https://www.barkermfg.com/. The following are basic maintenance requirements. Please refer to Barker’s instructions for jack and bubble level adjustments, installation, and additional maintenance.

Power Jack Maintenance

- Once a year, the powerhead should be removed, and a liberal amount of grease (preferably grease with a high melting point) applied directly to the coupling on which the drive pin rests. Do not pour oil into the top of the jack post.
- Once a year, the housing cover should be removed and the gears inspected for proper lubrication. Remove all four screws and tap around the edge of the housing to free the cover. Do not use or insert a screwdriver blade to remove the cover, as it may damage mating surfaces. If lubrication is needed, use Mobilith SHC™ 460 grease or equivalent. Clean the mating surfaces before replacing the cover.

⚠ WARNING

Avoid the risk of injury to yourself and others. Keep hands and feet from under the foot plate when using the jack. Do not use or install dolly wheels on the power jack. Do not operate the toggle switch with the manual crank handle in place. Failure to comply could result in serious injury.

NOTE

When operating the power jack, pause briefly between switching up and down. Rapidly switching from up or down may cause the breaker to trip, momentarily interrupting power to the jack.

Breakaway Switch

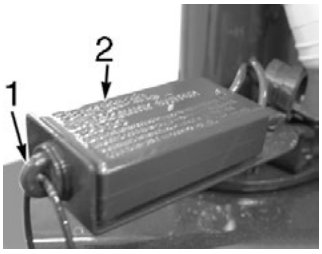

1. Pin
2. Breakaway Switch

To prevent corrosion within the breakaway switch, pull the pin out and spray the inside of the switch through the hole with an electric contact cleaner (such as Spra-Kleen). Applying a drop of light household oil on the pin and the groove near the base of the pin will allow the pin to operate freely. Immediately reinsert pin. Perform this procedure every 90 days.

⚠ WARNING

Allow no more than 20 to 30 seconds pin separation as damage to brake magnets may occur.

Batteries

There are three types of batteries commonly used in the RV industry, and based on your choice, your Airstream will have one of the following: Lithium, AGM, or Lead Acid. If you chose to add the solar option with lithium batteries, the battery would be installed by Airstream. Otherwise, all batteries are installed by your dealer.

The following sections provide general information about the capacity, maintenance, and storage of the different types of batteries. Please refer to the battery manufacturer's information for details specific to the type of battery you chose for your Airstream.

Battery Capacity

Battery capacity is measured in AH (amp-hours), which refers to the amperage a battery can provide for one hour. For example, a 100AH battery can provide approximately 100 amps for 1 hour. Likewise, it can provide 1 amp for 100 hours.

With the formula A (amps) x H (hours) = AH (amp-hours), you can roughly calculate how many amp-hours you are using if you know the total current draw of the device(s)/appliance(s) in use. For example, if an appliance draws 10A and is on for 2 hours, the discharge would be approximately 20AH.

Many factors affect the state of charge, and because of this, the runtime can vary greatly. The faster a battery is drained, the less overall amperage is available. The AH rating drops the faster you use it. The industry standard rating is "C-20" or 20-hour rating, which is the energy a battery can deliver continuously for 20 hours at a given temperature. If a battery discharges over 20 hours (or longer), it should provide 100% of its rated capacity. Capacity diminishes when discharging at higher currents in less time.

Battery Maintenance and Storage

Lead Acid Batteries

Lead Acid Batteries require periodic cleaning and occasionally need refilling. Because of the corrosive nature of battery acid, you must take certain safety precautions when servicing them. Follow the battery manufacturer's instructions for service and storage, and wear proper protective gear when handling batteries. Lead acid batteries are generally maintained and stored as follows:

Maintain a clean battery top and check terminals and cables for tightness and cleanliness. A dirty lead acid battery will dissipate its charge through surface contamination. Ensure the caps are in place and tightly sealed before cleaning. If the baking soda/water solution used for cleaning gets into the battery, it will neutralize the battery acid.

Clean the top of the battery using a ratio of two tablespoons of baking soda to a pint of water. Clean the battery terminal connectors with a wire or nylon brush to remove dirt and corrosion. Ensure the terminals are tight and free of corrosion.

During winter, lead acid batteries should be removed from the trailer and stored in a cool, dry place where there is no danger of freezing. They should be clean and properly filled. Charge every 30-60 days. A battery that is allowed to lose its charge completely will never regain its original power or fully charge. When leaving the battery in the trailer, it is unnecessary to leave it on charge. Disconnect the negative battery cable to prevent the battery's inadvertent discharging, which may lead to a complete discharge.

AGM Batteries

AGM batteries require very little maintenance other than keeping them clean and ensuring tight terminal connections. For information on how to properly maintain and store AGM batteries, consult the battery manufacturer's instructions.

Lithium Iron Phosphate Batteries

Lithium batteries require little maintenance other than keeping them clean and ensuring tight and clean terminal connections. Lithium batteries must be stored with a full charge and disconnected from loads by removing the negative cable. For information on how to properly store lithium batteries, consult the battery manufacturer's instructions.

⚠ WARNING

Before removing the batteries, verify that shoreline power is not connected. The risk of electrical shock may be present.

⚠ WARNING

Be sure to reconnect the battery cable terminals to the correct battery posts. Failure to do so could damage the battery and connected systems and potentially cause injury.

NOTICE

Avoid letting the battery get too low in charge, and never store a battery without fully charging it first. Keep your battery in a cool and dry place with plenty of ventilation, and remember to recharge as directed by the battery manufacturer.

NOTE

A battery will self-discharge 1-3% per month at 80 degrees. Depending on environmental conditions, this discharge rate may increase.

Lithium Battery Cold Weather Operation

Lithium batteries may not charge properly during cold weather usage if the temperature is below 35°F. Because of this, manufacturers may incorporate an internal heating system, allowing for use in colder climates and expanding the temperature restrictions for the battery's internal Battery Management System (BMS). If equipped, the heating element may be enabled and disabled by an installed switch or automatically by an internal temperature gauge. Once on, the heating element will automatically engage and disengage as temperatures rise and fall.

SmartShunt

Airstreams with the factory-installed lithium battery option will have a SmartShunt. The SmartShunt connects via Bluetooth® to the VictronConnect app on your smartphone (or tablet) to conveniently read out all monitored battery parameters, like state of charge, time to go, and historical information. To learn more and to download the app, scan the QR code above, click on one of the icons below, or visit www.victronenergy.com and click on downloads.

Use the default PIN code 000000 to sign up

Download on the App Store

GET IT ON Google Play

NOTE

Airstreams without the factory-installed lithium option will have a ground stud instead of the Smartshunt. If lithium batteries are installed by a dealer, it is recommended a Smartshunt be installed.

Water Pump

Water Pump Access Locations

The 16RB model has the water pump and strainer located under the roadside dinette seat. Access is gained by lifting the seat cushion to reveal the access panel.

The 19CB model has the water pump and strainer located under the Stove. Access is gained removing the bottom drawer.

The 20FB model has the water pump and strainer located under the roadside dinette seat closest to the lavy. Access is gained by lifting the seat cushion to reveal the access panel.

The 22FB model has the water pump and strainer located under the roadside wardrobe. Access is gained by removing the felt covered lower wardrobe shelf. The winterization kit is located under the galley. Remove bottom panel to access.

Strainer Cleaning

Locate the strainer housing (on the water line leading to the water pump inlet). Remove the transparent bowl (turn counterclockwise), and carefully pull out the strainer/screen. Clean and rinse with water (use a household detergent if necessary). Reinstall the strainer and bowl, being careful not to damage the seal. The bowl collects sediment and should be positioned under the housing as depicted above. Check for leaks prior to resuming normal operation.

Fresh Water Tanks and Draining

Drain Valves

Drain valve locations are listed below by model; however, it may be helpful to know how to locate them should this information become outdated due to a change mid-production.

To locate internal low-point drain valves:

1. Look for a water line (usually white, red, or blue) protruding from the exterior underbelly. It will be a bare line with no valve. There may be two or more.
2. Establish a reference point to something inside the trailer, such as a window or vent.
3. Once inside, use your reference point to locate where the water line comes out of the floor. Trace the water line to the nearby low-point drain valve connection.

You can find where water lines come through the floor and locate valves by removing access panels inside or under furniture near your reference point; others are accessible by removing a drawer or opening a cabinet/compartment door. Sometimes access to internal valves is gained externally from inside a storage compartment.

To locate external fresh water tank valve(s), look for a stainless steel valve or in-line brass valve(s) mounted to the galvanized steel underbelly (see below).

For more information on the plumbing layout, see Fresh Water Layouts on page 8-28

Drain Valve Locations

16RB: To access the internal low-point drain valve, remove the access panel below the roadside dinette seat cushion. The external brass freshwater drain valves (left photo) are on the galvanized steel underbelly; roadside.

19CB: To access the internal low-point drain valves, remove the access panel under the mattress. The external stainless steel fresh water tank drain (right photo) is on the galvanized steel underbelly; roadside.

20FB: To access the internal low-point drain valves, remove the access panel below the front dinette seat cushion. The external stainless steel fresh water tank drain (right photo) is on the galvanized steel underbelly; roadside.

22FB: To access the internal low-point drain valves, remove the bottom wardrobe shelf/access panel. The external stainless steel fresh water tank drain (right photo) is on the galvanized steel underbelly; roadside.

Opening and Closing Valves

To open valves, turn the handle to align it with the waterline.

Fresh Water Tank Draining

Pumping the water out with the self-contained water pump can empty the fresh water tank. Simply turn on the pump switch and open a couple of faucets until the water will no longer drain out, or use the stainless steel valve and/or brass drain valve(s) located on the freshwater tank pan. Be sure to watch closely and turn the pump off when the tank runs dry.

NOTICE

Do not let the pump run dry for extended periods of time as this could damage the pump.

Sanitizing

Potable water systems require periodic maintenance to deliver a consistent flow of fresh water. Depending on use and the environment the system is subject to, sanitizing is recommended prior to storing and before using the water system after a period of storage. Systems with new components, or ones that have been subjected to contamination should also be disinfected as follows:

1. Use one of the following methods to determine the amount of common household bleach needed to sanitize the tank.
   a. Multiply “gallons of tank capacity” by 0.13; the result is the ounces of bleach needed to sanitize the tank.
   b. Multiply “Liters of tank capacity” by 1.0; the result is the milliliters of bleach needed to sanitize the tank.
2. Mix the proper amount of bleach into a container of water.
3. Pour the correct amount of solution (water/bleach) into the Fresh Water tank and fill with potable water.
4. Open all faucets (hot and cold) allowing the water to run until the distinct odor of chlorine is detected.
5. The standard solution must have 4 hours of contact time to disinfect completely. Doubling the solution concentration will allow for contact time of one (1) hour.
6. When the contact time is completed, drain the tank. Refill with potable water and flush the plumbing of all sanitizing solution.

Black and Gray Water Tank Draining

To empty one or both tanks, attach the sewer hose by pressing the bayonet fitting onto the dump valve outlet and rotate clockwise until it feels solid and secure. Attach the outlet end of the hose to the sewage outlet, making sure the hose is placed so it will drain completely. Pull the main dump valve handle as far as it will go and wait until the tank is drained. Close the dump valve and partially refill the tank with clean water and repeat the process until clean. The main holding tank must be flushed out until all paper and waste material is removed. Should solids accumulate, close the dump valve, fill the tank about half full with water, then tow the trailer for a few miles. The turbulence and surging of the water will usually dissolve the solids into suspension so the tank can be drained. Pull the auxiliary tank valve handle to drain the gray water tank. When dumping, the main holding tank should be dumped first, then the auxiliary holding tank. This will help to rinse out the sewer line with auxiliary holding tank water. Replace the bayonet ring cap prior to traveling.

16-ft. Model

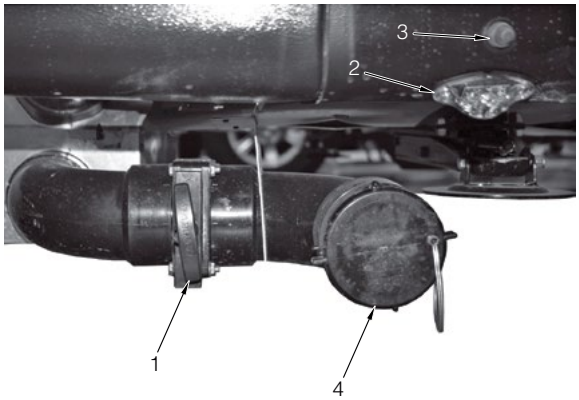

1. Combination Wastewater Sewage (Gray/Black)
2. Light
3. Light Switch
4. Drain Cap (Drain Hose Hookup)

All Other Models

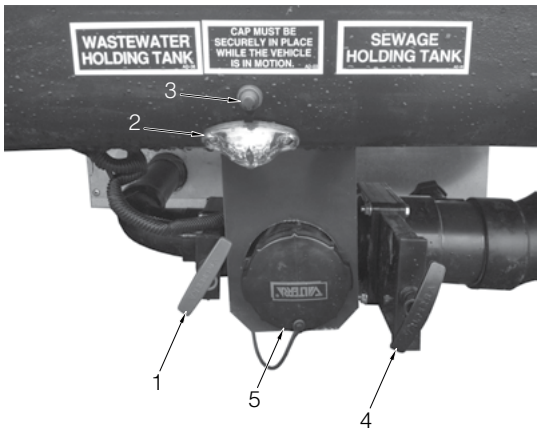

1. Wastewater (Gray) Tank Valve
2. Light
3. Light Switch
4. Sewage (Black) Tank Valve
5. Drain Cap (Drain Hose Hookup)

Black Water Tank Dumping

When you are in a park and connected to a sewer outlet, keep the main holding tank dump valve closed, and empty the tank every few days, or whenever it becomes almost full. Only by sending a large volume of liquid, all at once, through the main holding tank will toilet paper and other solids completely wash away.

This practice will avoid the accumulation of solids in the main holding tank, which could lead to an unpleasant cleaning job. Should solids accumulate, close the dump valve, fill the tank about half full with water, then tow the trailer for a few miles. The turbulence and surging of the water will usually dissolve the solids into suspension so the tank can be drained.

Draining the tanks as described will protect them from freezing during storage. When traveling in sub-freezing temperatures, use a winterizing solution designed for RV use. Follow the directions on the container.

Black Water Tank Flush

The trailer has a water hose connector specifically for flushing the Black Water Tank. To use, hook up a garden hose and turn it on. Within the tank, a head with multiple holes will spray the interior surface of the tank. Once the tank is about half full, turn the garden hose off and flush the water from the tank using the dump valve. The valve should be closed for the first couple of minutes, and then opened to let the water out in a rush. Repeat as needed.

It is recommended the tank flush be used on a regular basis or the holes on the spray head may become clogged.

Drain Systems Cleaning

The only cleaning agents that can be used without causing harm to the system are household ammonia and tri-sodium phosphate in small quantities. Do not use any product that contains any portion of petroleum distillates. This type of product will attack the rubber seals of your toilet and dump valve. Also, do not use any dish detergent or abrasive cleaners. All products should be marked as approved for ABS drainage systems.

Winterizing and Storage

The main consideration in winterizing your trailer is to guard against freeze damage to the fresh water system, including lines, tank, and pump; the waste drain system, including traps and tanks; the water heater, and the batteries.

When storing your trailer for short or long periods, use the same precautions as you would in your home regarding perishables, ventilation, and rain protection. In addition, for prolonged storage periods, flush out all the drain lines and the holding tanks. Also, drain the entire water system, including the water heater and the water storage tank, using the following instructions.

Winterization Procedure

Below are the basic steps to completing the winterization process. It can be time-consuming and challenging to drain all of the water from the system. These tasks require an average mechanical skill level. If you are unsure of your ability to remove all the water from the system successfully, please seek assistance.

The goal is to get all the water out of the system to prevent freeze damage. We recommend allowing the system to drain for several days. You will need an adapter with an air regulator to connect an air compressor to the city water inlet and access to an air compressor.

1. Level the trailer from side to side and front to rear. Open all faucets.
2. Turn the water pump switch to the ON position to expel water from the storage tank
3. Open all drain valves including exterior water service valve, if applicable.
4. While the water is draining from the system, open and flush the toilet-flushing valve. Operate the shower head while holding it down inside the tub and drain all water from the flexible hose.
5. Turn the pump switch OFF after all water has been removed from the storage tank.
6. Disconnect outlet hose from water pump. Turn the pump on until all the water is expelled. This water, about 1/2 cup, can be caught in a towel or rag.
7. Reconnect the water pump outlet.
8. Lower the front of the trailer as far as the jack will allow and let the trailer sit until water ceases to drain (no droplets are forming), then crank the jack up as high as it will go until water ceases to drain.

9. Using the adapter mentioned at the beginning, apply, at max, 50 lbs. of air pressure to the city water inlet until only air is coming out of the faucets. You may need to open and close faucets one at a time and repeat this step several times to force out trapped water.
10. Pour a cup of non-toxic RV antifreeze that has been approved and listed by a recognized testing authority such as Underwriter Lab into the lavatory, sink and tub drains to prevent trap freeze-up.
11. Be sure to open the waste-holding tank dump valves and drain and flush the tanks thoroughly *(this is very important as the sewage in the tanks, if frozen, could seriously damage the tanks)*. Plan ahead and have this done at a dump station.
12. Remove the batteries from your trailer and store in a cool, dry place where there is no danger of freezing. It is very important for optimum life of a battery to check it periodically and to keep it fully charged.

NOTICE

Remove all RV antifreeze spillage from all drain and faucet parts after winterizing. Failure to do so could damage the plumbing fixture's finish. Do not use water to rinse antifreeze down the drain as it will dilute the antifreeze.

Optional; An additional step to winterization is to consider adding a non-toxic RV antifreeze (approved for drinking water systems) to the water lines using the pre-installed Winterization Kit.

Before beginning, read the RV antifreeze manufacturer's label for instructions specific to the antifreeze you plan to use. It may take 2-3 gallons to fill the entire system so prepare accordingly. It will be helpful to have another person watching and operating the faucets and shower heads as you follow these steps.

The Winterization Kit is near the water pump, see Water Pump Access Locations on page 8-12. For drain valve locations, see Drain Valve Locations on page 8-13.

1. Reconnect all lines and shower heads that were disconnected in the previous steps.
2. Close all the drain valves.
3. Open the sink and shower drains if they are closed.
4. Open all the faucets, including the shower head faucet handle and, if equipped, the external shower head.

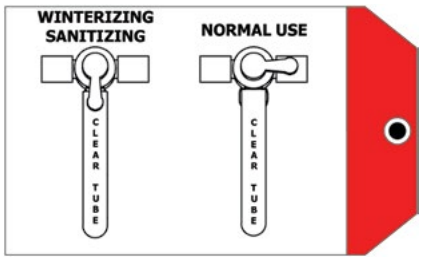

5. Go to the winterization kit and turn the valve handle to the winterizing position as indicated on the tag attached to the kit (shown above).
6. Uncoil the hose attached to the kit, remove the hose cap, and insert the hose down to the bottom of the RV antifreeze container.
7. Turn the pump switch on and run it until antifreeze starts coming out of the faucets. Once antifreeze runs from one tap, turn it off and continue to the next one. Move from one fixture to the next, shutting them off as you go until all the lines are full. As you empty each antifreeze container, turn the pump off, transition to a full container, and turn the pump back on to continue.
8. Allow the antifreeze to flow down drains. Flush the toilet and allow antifreeze to flow down the toilet. If equipped, operate the toilet hand sprayer until antifreeze is coming out. Work the hand shower sprayer while holding it down in the tub until antifreeze is coming out, and if equipped, do the same with the external shower head. Any remaining antifreeze can be dumped down a drain.
9. Shut the pump off once all the lines are full.
10. Open all the faucets and leave them open.
11. Turn the winterization kit valve back to the normal use position, place the cap back on the hose, and coil it back up for storage.

Restoring Service After Winter

1. Re-install the fully charged batteries.
2. Close the dump valve, all water faucets, and fresh water tank drain.
3. Add water to the fresh water tank.
4. Turn on the water pump.
5. Open and close the faucets one at a time until the water runs clear at all faucets signaling RV non-toxic antifreeze is flushed out of lines. Go back and recheck water clarity at all faucets.
6. Turn off the water pump.
7. Hook up to a city water supply, open the faucets again, and recheck water clarity.

Main Door Care

Lubrication

Apply a little paraffin or grease to the striker pockets and a slight amount of household oil to the lock mechanisms to keep the locks operating smoothly. Also, lubricate the hinge pins periodically with household oil. Use the lubricant sparingly and remove any excess from exterior skin immediately.

Adjustment

Main door adjustment can be affected by:

- The trailer being improperly leveled (causing twisting of trailer body/shell).*
- Striker bolt alignment being out of adjustment, (striker bolt is adjustable).
- Screen door being out of adjustment, resulting in a situation of the door rubbing the frame, or not closing flush (which will create pressure on the door).
- Main door has come open at some point introducing a change to the contour of the door frame (check for sheared rivets on interior skin of door).

* When using the stabilizers (for eliminating movement-not leveling) on your Airstream be sure to check the fit of your main door before and after extending stabilizers. The fit of the main door can be affected if trailer is not level side to side and front to back.

Tambour Track Maintenance

Applying a coat of silicon spray to the locker tracks will allow the tambour doors to travel smoothly.

Open

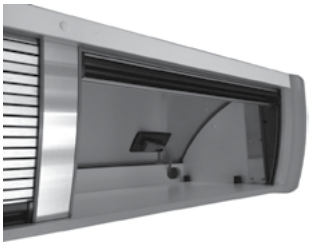

Closed

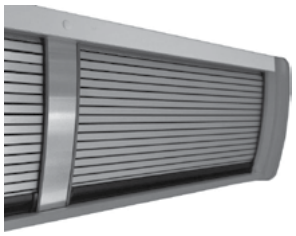

Windows

Sticking Windows

Forcing the window open may cause the window to shatter. Always follow the guidelines below for releasing a stuck window.

1. Unlatch the window latches securing the windows on the interior.
2. Apply some 303 Aerospace Protectant to a nylon wedge window tool.
3. Starting in the corner, tuck the end of the nylon tool under the glass and gently slide to opposite end.

⚠ WARNING

Prying up or applying pressure to the window may cause the window to shatter, resulting in personal injury or unit damage.

4. Once the window is released, wash the gasket with a mild soap and water solution, and dry.
5. Apply 303 Aerospace Protectant (Airstream part # 44845WR-01) to the window gasket. To apply, spray/pour 303 onto a soft rag or sponge and apply a generous coating directly to the gasket. Remove any residue that comes in contact with the exterior aluminum skin. This may be ordered through the Airstream Parts Department or at the Airstream online store at www.airstream.com.

Electrical Diagrams

The following electrical diagrams are representative of the National Electric Code (NEC) and Canadian Standards Association (CSA). All circuits are NEC with the exception of CSA circuits as specified in each respective table.

12-Volt Main Schematic

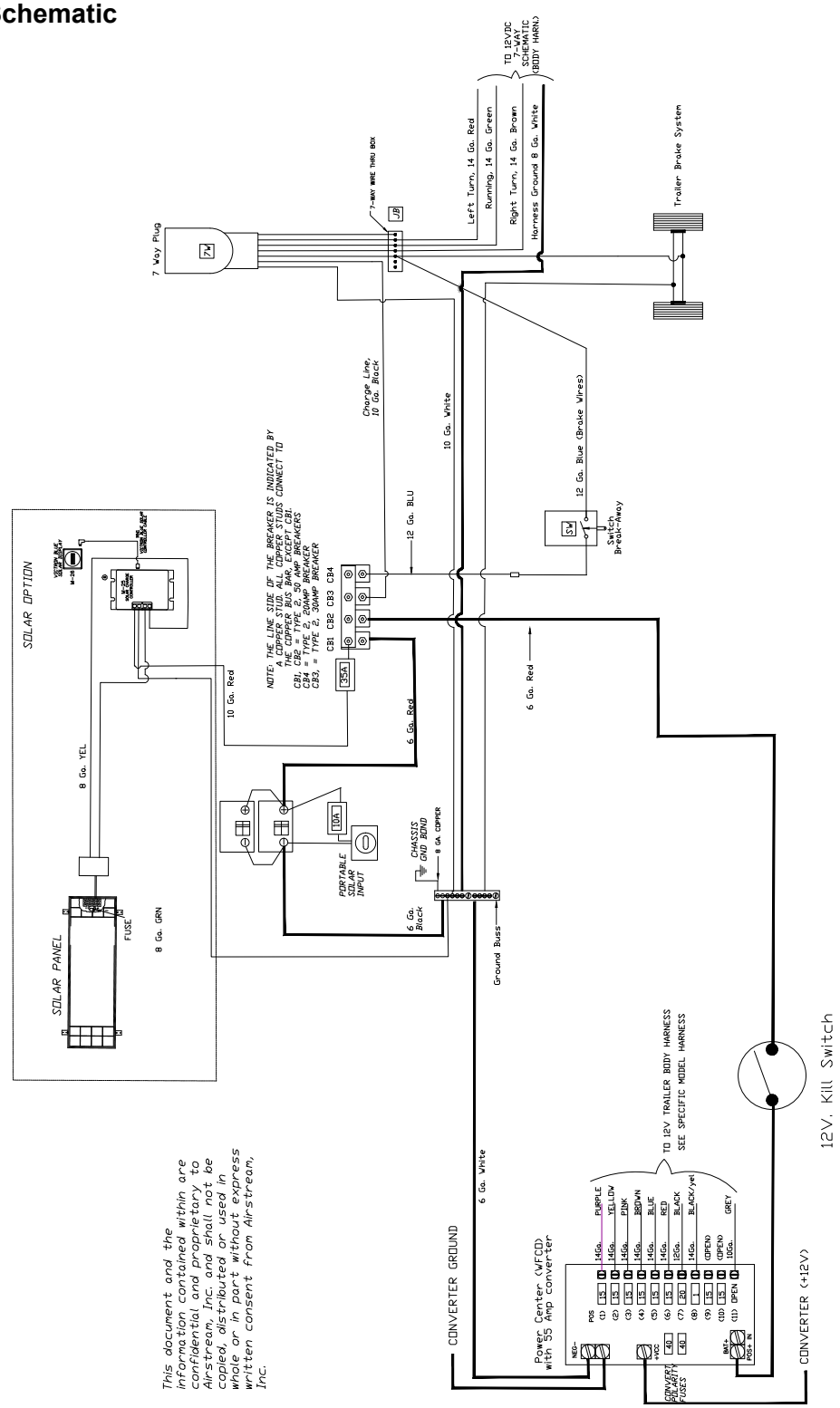

120-Volt/30 Amp Diagram

16RB Bambi

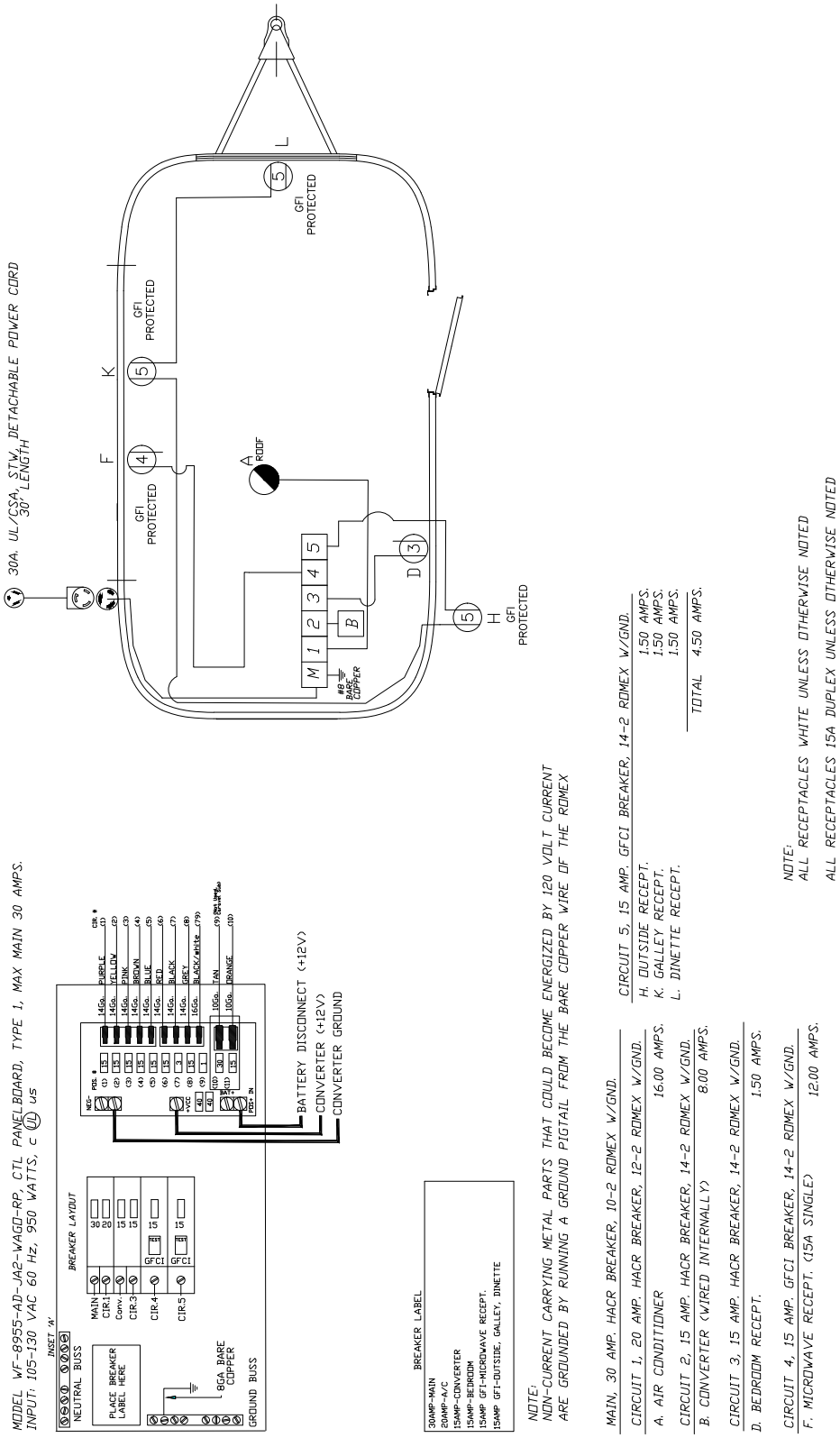

120-Volt/30 Amp Diagram - CSA

16RB Bambi

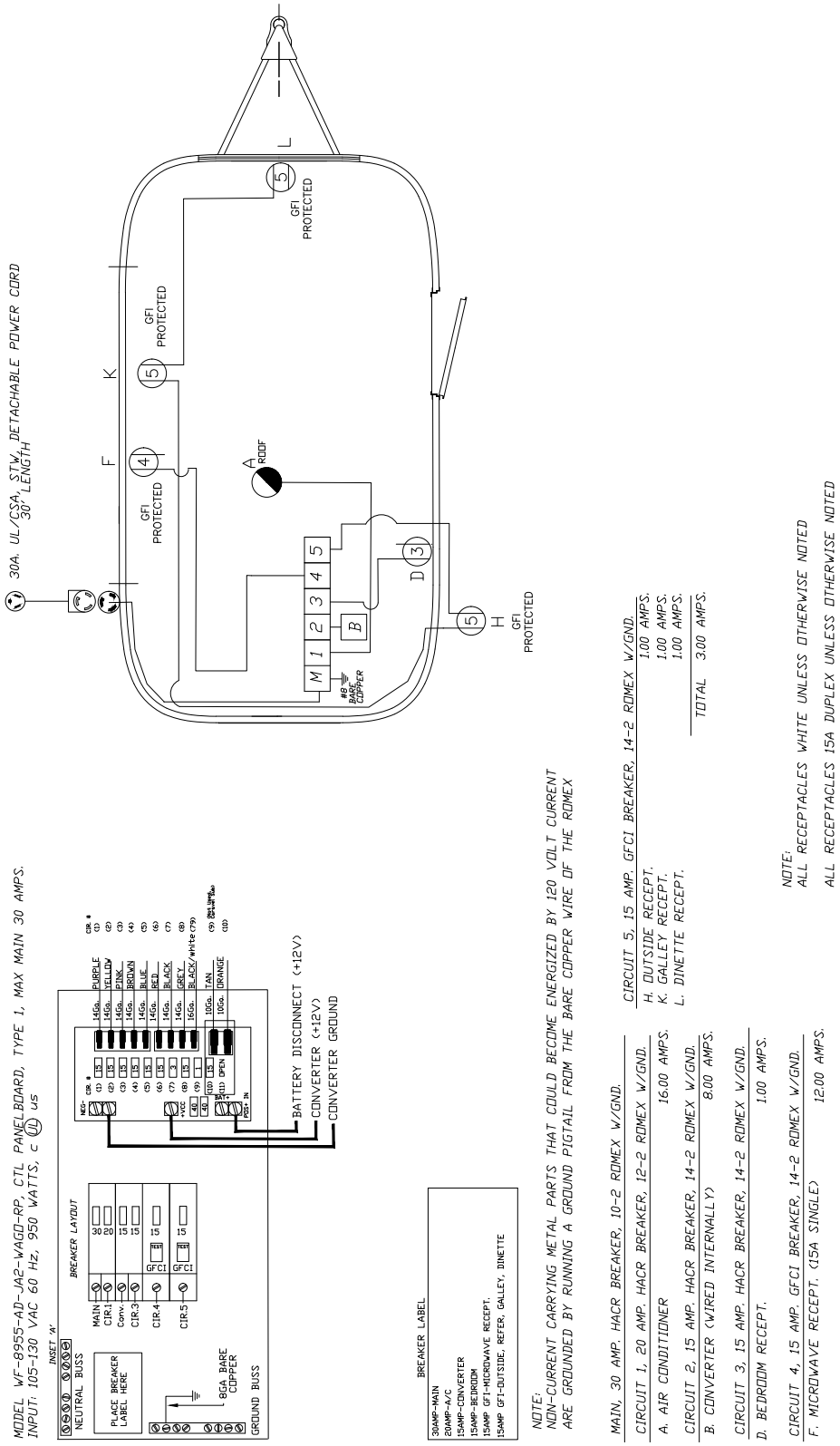

120-Volt/30 Amp Diagram

19CB Bambi

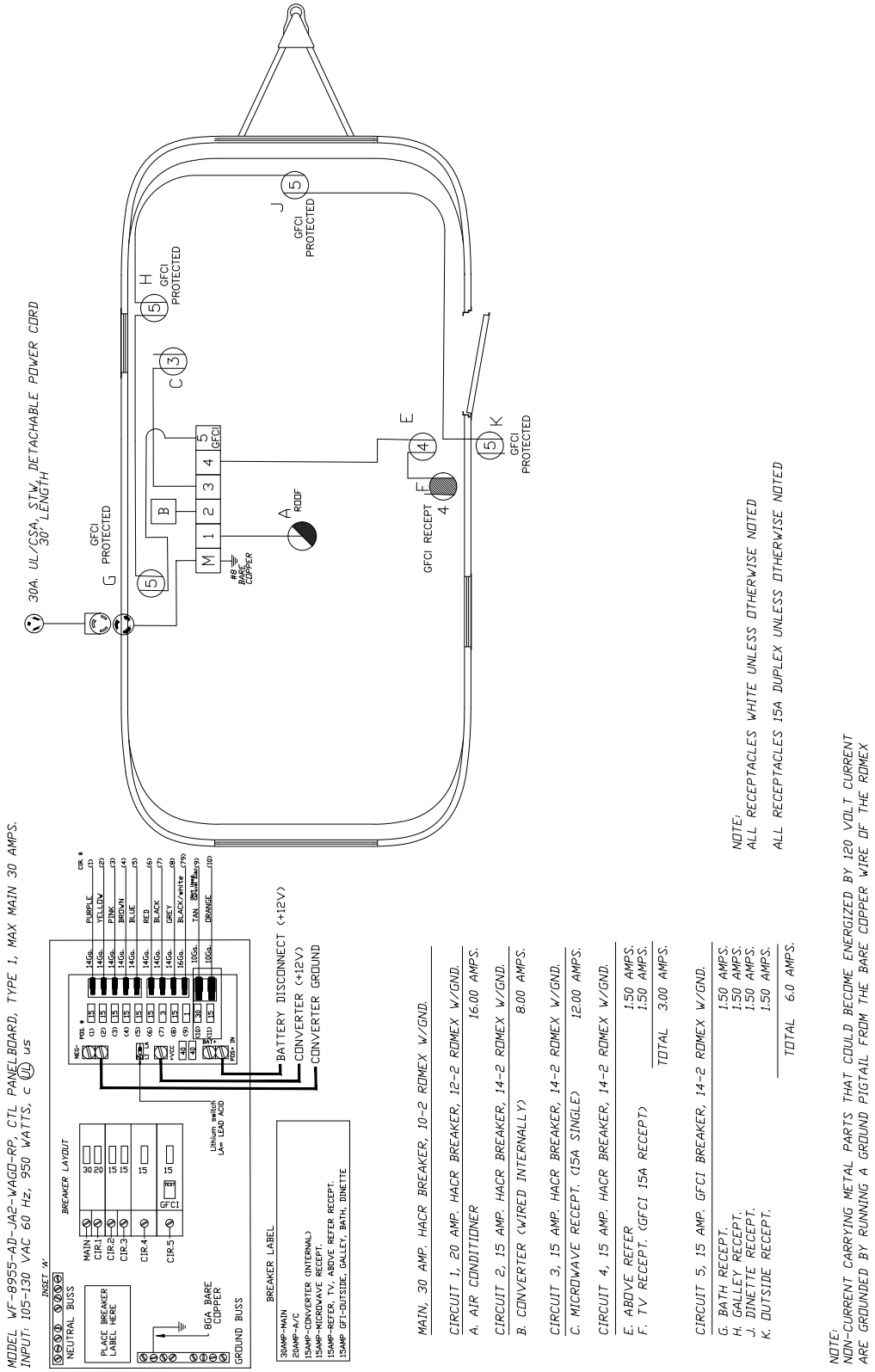

120-Volt/30 Amp Diagram - CSA

19CB Bambi

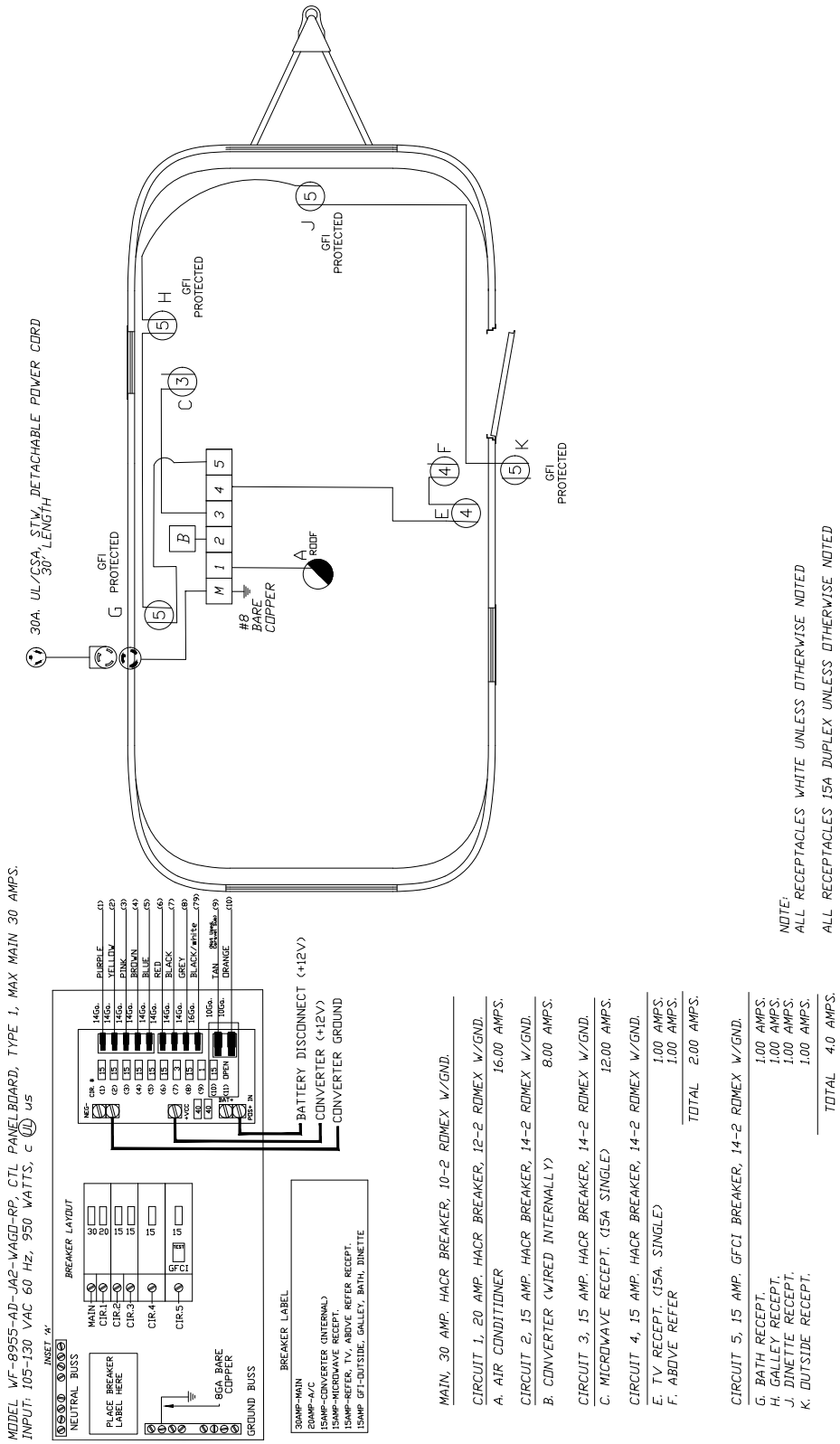

120-Volt/30 Amp Diagram

20FB Bambi

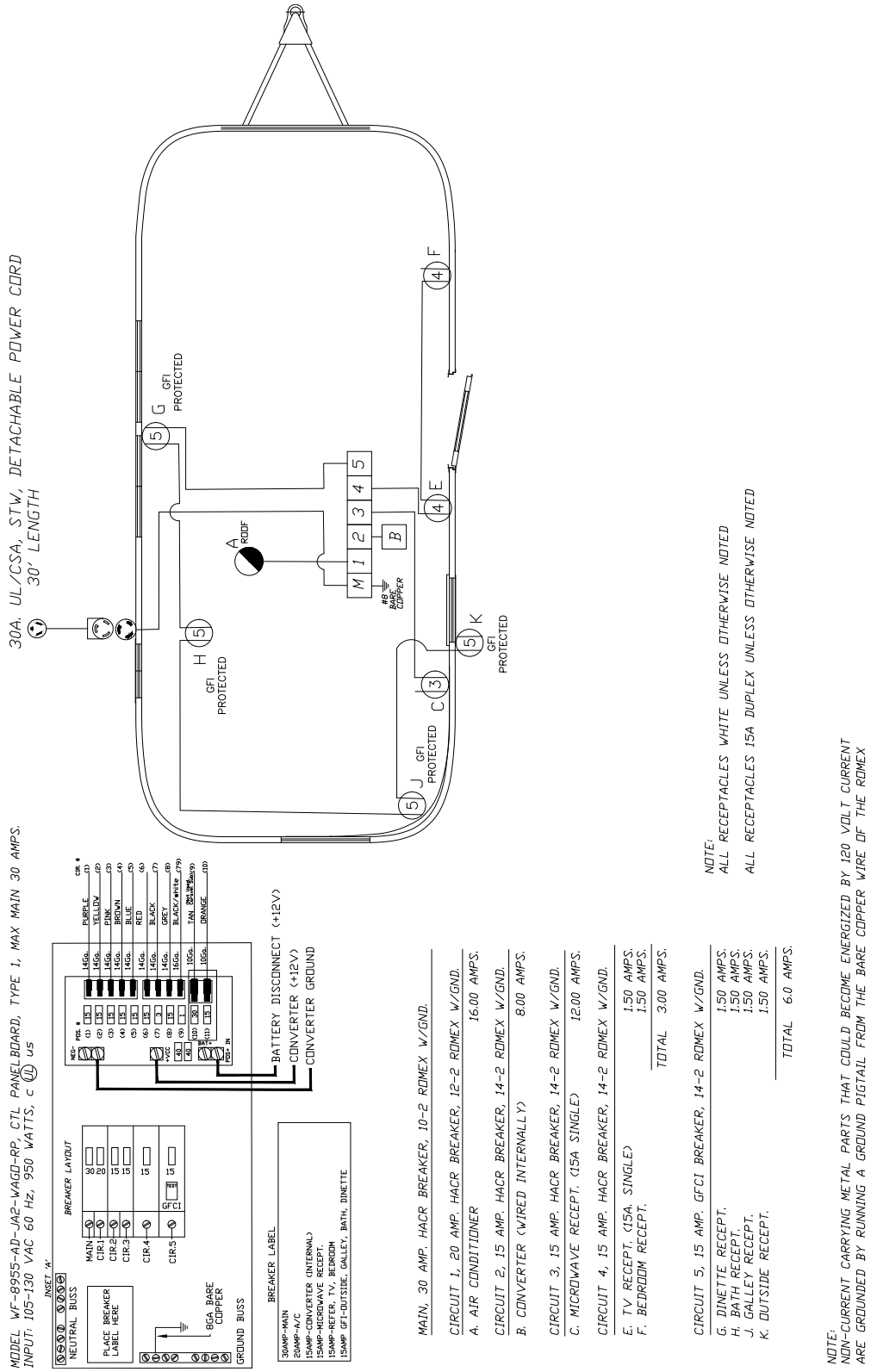

MAIN, 30 AMP. HACR BREAKER, 10-2 ROMEX W/GND.

CIRCUIT 1, 20 AMP. HACR BREAKER, 12-2 ROMEX W/GND.

A. AIR CONDITIONER — *16.00 AMPS.*

CIRCUIT 2, 15 AMP. HACR BREAKER, 14-2 ROMEX W/GND.

B. CONVERTER (WIRED INTERNALLY) — *8.00 AMPS.*

CIRCUIT 3, 15 AMP. HACR BREAKER, 14-2 ROMEX W/GND.

C. MICROWAVE RECEPT. (15A SINGLE) — *12.00 AMPS.*

CIRCUIT 4, 15 AMP. HACR BREAKER, 14-2 ROMEX W/GND.

E. TV RECEPT. (15A, SINGLE) — *1.50 AMPS.*
F. BEDROOM RECEPT. — *1.50 AMPS.*
TOTAL — *3.00 AMPS.*

CIRCUIT 5, 15 AMP. GFCI BREAKER, 14-2 ROMEX W/GND.

G. DINETTE RECEPT. — *1.50 AMPS.*
H. BATH RECEPT. — *1.50 AMPS.*
J. GALLEY RECEPT. — *1.50 AMPS.*
K. OUTSIDE RECEPT. — *1.50 AMPS.*
TOTAL — *6.0 AMPS.*

NOTE:
ALL RECEPTACLES WHITE UNLESS OTHERWISE NOTED

ALL RECEPTACLES 15A DUPLEX UNLESS OTHERWISE NOTED

NOTE:
NON-CURRENT CARRYING METAL PARTS THAT COULD BECOME ENERGIZED BY 120 VOLT CURRENT ARE GROUNDED BY RUNNING A GROUND PIGTAIL FROM THE BARE COPPER WIRE OF THE ROMEX

120-Volt/30 Amp Diagram - CSA

20FB Bambi

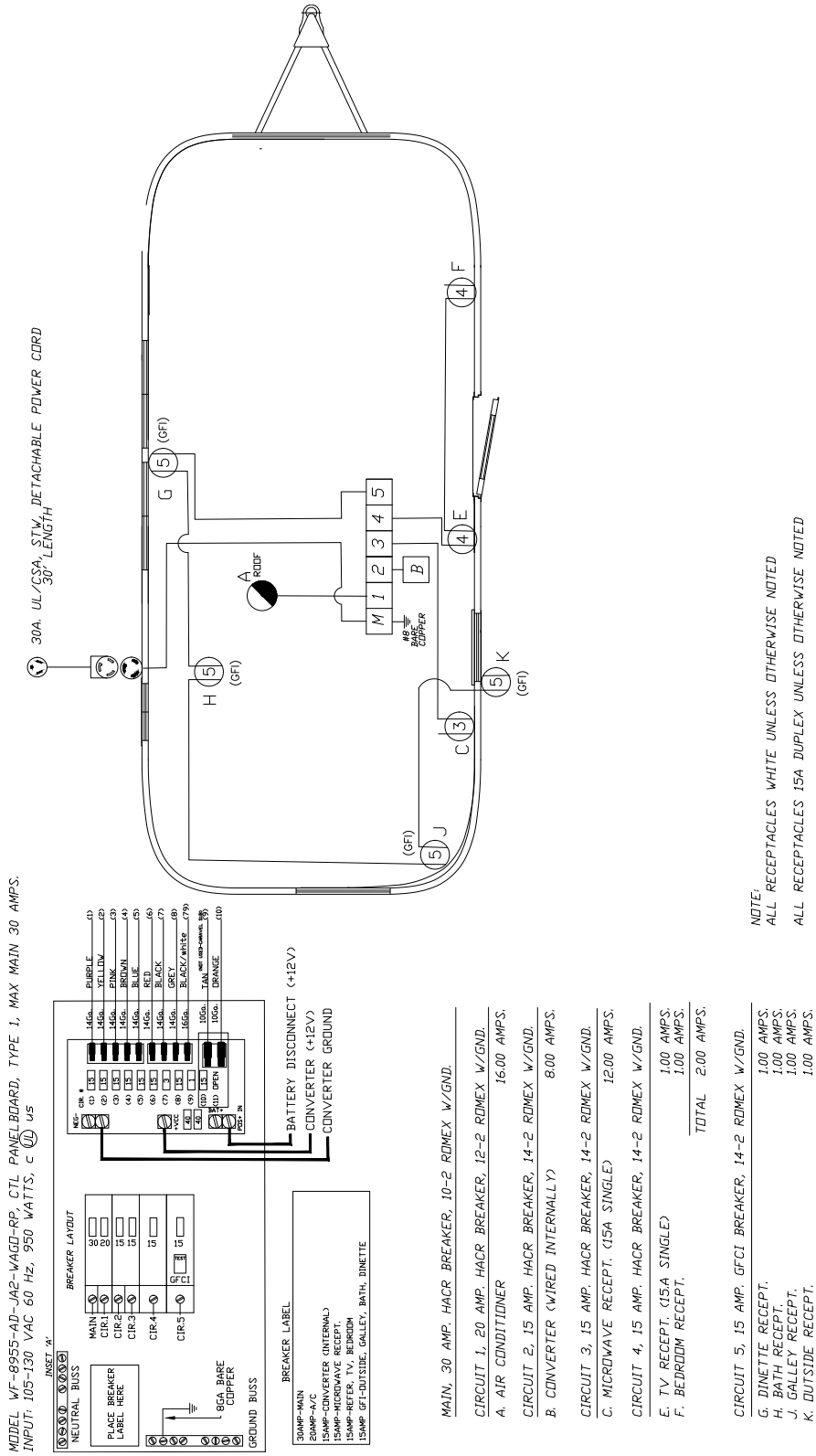

MAIN, 30 AMP. HACR BREAKER, 10-2 ROMEX W/GND.

CIRCUIT 1, 20 AMP. HACR BREAKER, 12-2 ROMEX W/GND.

A. AIR CONDITIONER — *16.00 AMPS.*

CIRCUIT 2, 15 AMP. HACR BREAKER, 14-2 ROMEX W/GND.

B. CONVERTER (WIRED INTERNALLY) — *8.00 AMPS.*

CIRCUIT 3, 15 AMP. HACR BREAKER, 14-2 ROMEX W/GND.

C. MICROWAVE RECEPT. (15A SINGLE) — *12.00 AMPS.*

CIRCUIT 4, 15 AMP. HACR BREAKER, 14-2 ROMEX W/GND.

E. TV RECEPT. (15A SINGLE) — *1.00 AMPS.*
F. BEDROOM RECEPT. — *1.00 AMPS.*
TOTAL — *2.00 AMPS.*

CIRCUIT 5, 15 AMP. GFCI BREAKER, 14-2 ROMEX W/GND.

G. DINETTE RECEPT. — *1.00 AMPS.*
H. BATH RECEPT. — *1.00 AMPS.*
J. GALLEY RECEPT. — *1.00 AMPS.*
K. OUTSIDE RECEPT. — *1.00 AMPS.*
TOTAL — *4.0 AMPS.*

NOTE:
ALL RECEPTACLES WHITE UNLESS OTHERWISE NOTED

ALL RECEPTACLES 15A DUPLEX UNLESS OTHERWISE NOTED

NOTE:
NON-CURRENT CARRYING METAL PARTS THAT COULD BECOME ENERGIZED BY 120 VOLT CURRENT ARE GROUNDED BY RUNNING A GROUND PIGTAIL FROM THE BARE COPPER WIRE OF THE ROMEX

120-Volt/30 Amp Diagram

22FB Bambi

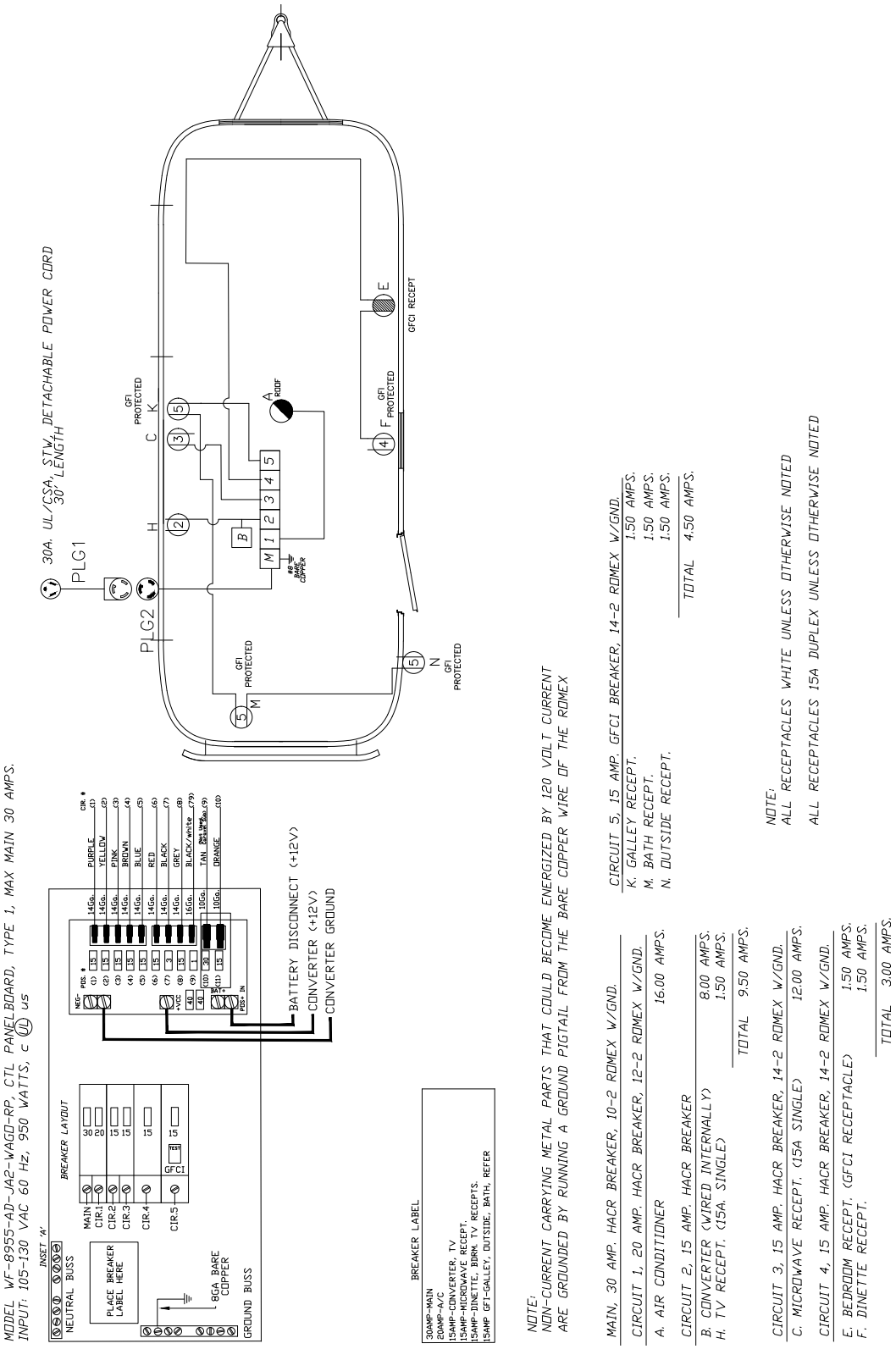

120-Volt/30 Amp Diagram - CSA

22FB Bambi

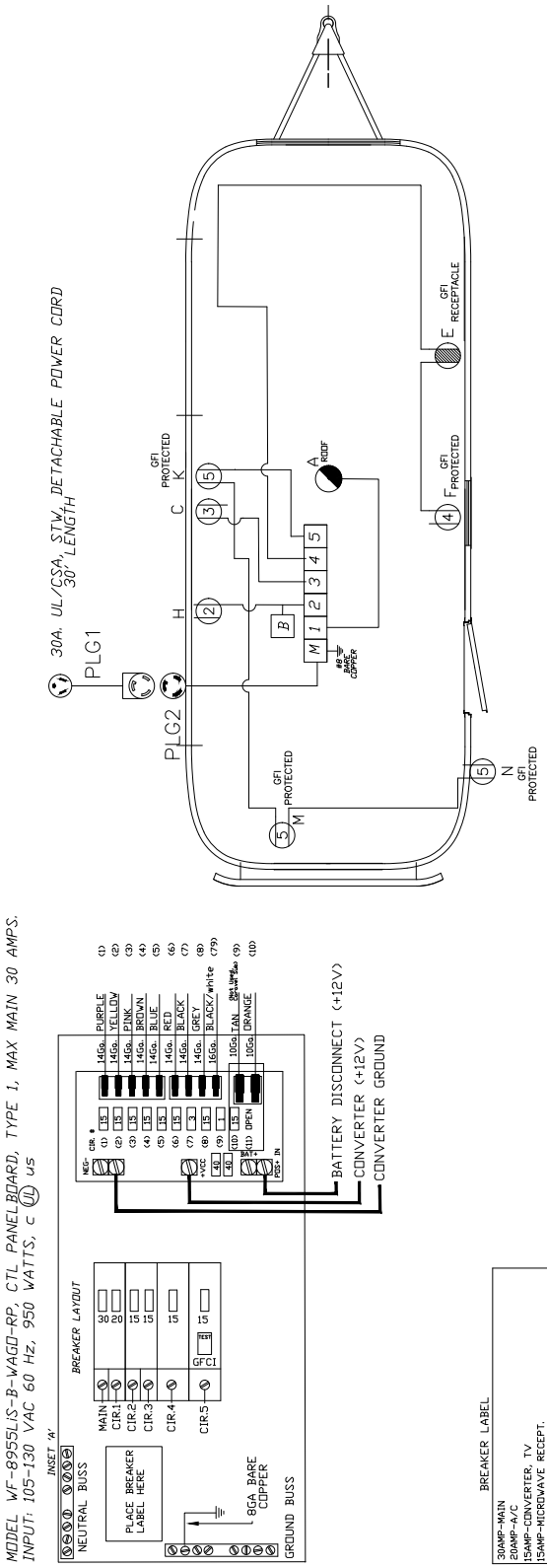

NOTE:
NON-CURRENT CARRYING METAL PARTS THAT COULD BECOME ENERGIZED BY 120 VOLT CURRENT ARE GROUNDED BY RUNNING A GROUND PIGTAIL FROM THE BARE COPPER WIRE OF THE ROMEX

MAIN, 30 AMP. HACR BREAKER, 10-2 ROMEX W/GND.

CIRCUIT 1, 20 AMP. HACR BREAKER, 12-2 ROMEX W/GND.
A. AIR CONDITIONER — 16.00 AMPS.

CIRCUIT 2, 15 AMP. HACR BREAKER
B. CONVERTER (WIRED INTERNALLY) — 8.00 AMPS.
H. TV RECEPT. (15A. SINGLE) — 1.00 AMPS.
TOTAL 9.00 AMPS.

CIRCUIT 3, 15 AMP. HACR BREAKER, 14-2 ROMEX W/GND.
C. MICROWAVE RECEPT. (15A SINGLE) — 12.00 AMPS.

CIRCUIT 4, 15 AMP. HACR BREAKER, 14-2 ROMEX W/GND.
E. BEDROOM RECEPT. (GFCI RECEPTACLE) — 1.00 AMPS.
F. DINETTE RECEPT. — 1.00 AMPS.
TOTAL 2.00 AMPS.

CIRCUIT 5, 15 AMP. GFCI BREAKER, 14-2 ROMEX W/GND.
K. GALLEY RECEPT. — 1.00 AMPS.
M. BATH RECEPT. — 1.00 AMPS.
N. OUTSIDE RECEPT. — 1.00 AMPS.
TOTAL 3.00 AMPS.

NOTE:
ALL RECEPTACLES WHITE UNLESS OTHERWISE NOTED

ALL RECEPTACLES 15A DUPLEX UNLESS OTHERWISE NOTED

Solar Panel Wiring

For your convenience Airstreams has installed a 3 port easy install box to the roof of the trailer, as well as, a plug for a portable solar panel at the front of the trailer near the battery box. The roof port now allows for easy install of an aftermarket solar panel. Simply plug the power cord from the solar panel into the 3 port box.

A Cat 5-patch cord for a solar panel display, if supplied with the after market unit, runs from the battery buss bar to an area just behind the Seelevel Monitor display. The best way to reach the Cat 5 cable is to remove the Seelevel Monitor. The solar panel display can be mounted in the area near the Seelevel Monitor panel by routing the proper hole size. The Cat 5 wire is then plugged into the solar display panel.

NOTE

The yellow wire must be fused with a 35-amp in-line fuse at the 12-volt positive. All wires are identified with labels at all locations.

The solar panel has a charge controller that should be mounted close to the battery buss bars, as the battery leads and Cat 5 wire are hooked into it to sense the actual battery charge.

The following diagram depicts the way Airstream wires the solar system on factory-installed units and is the recommended wiring for use of the pre-wire system.

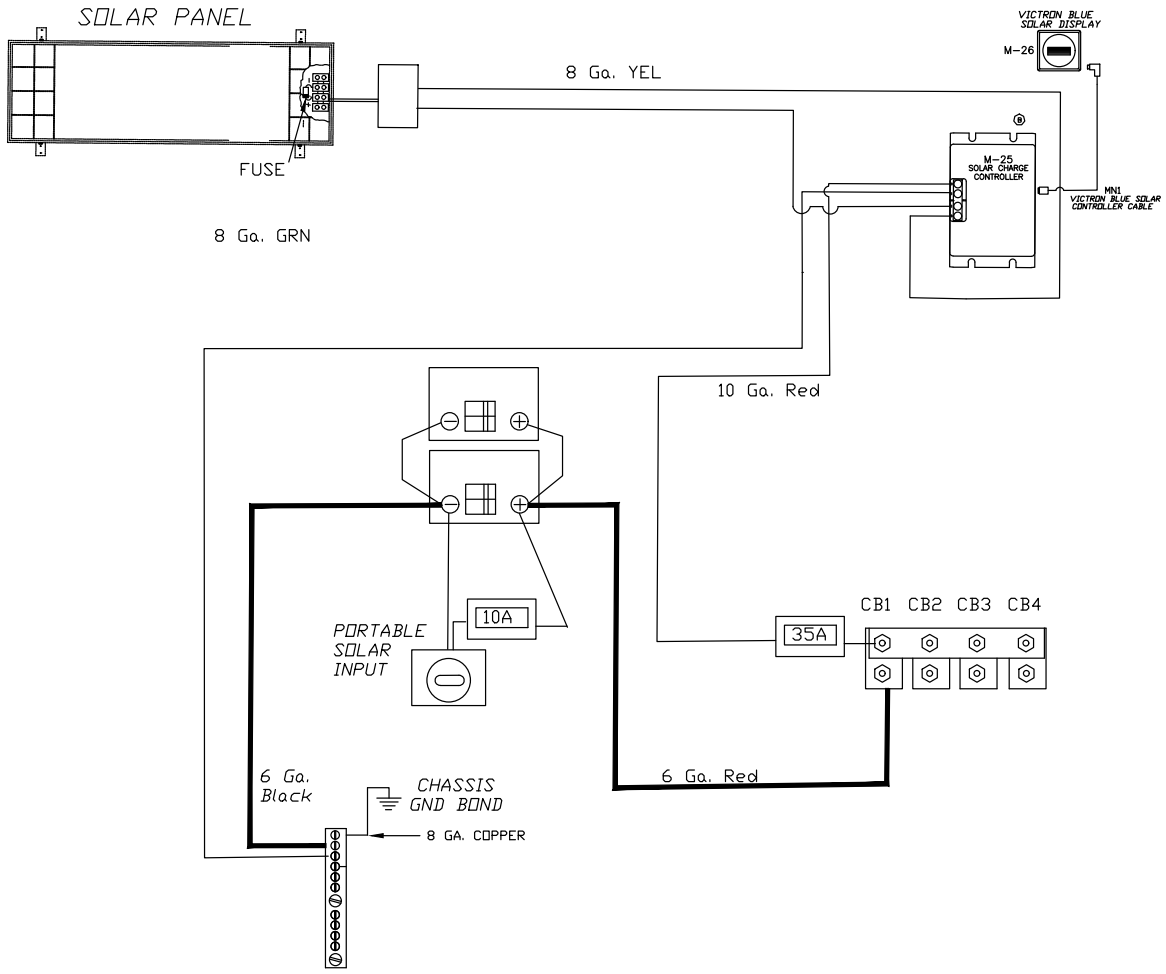

Fresh Water Layouts

16RB Bambi

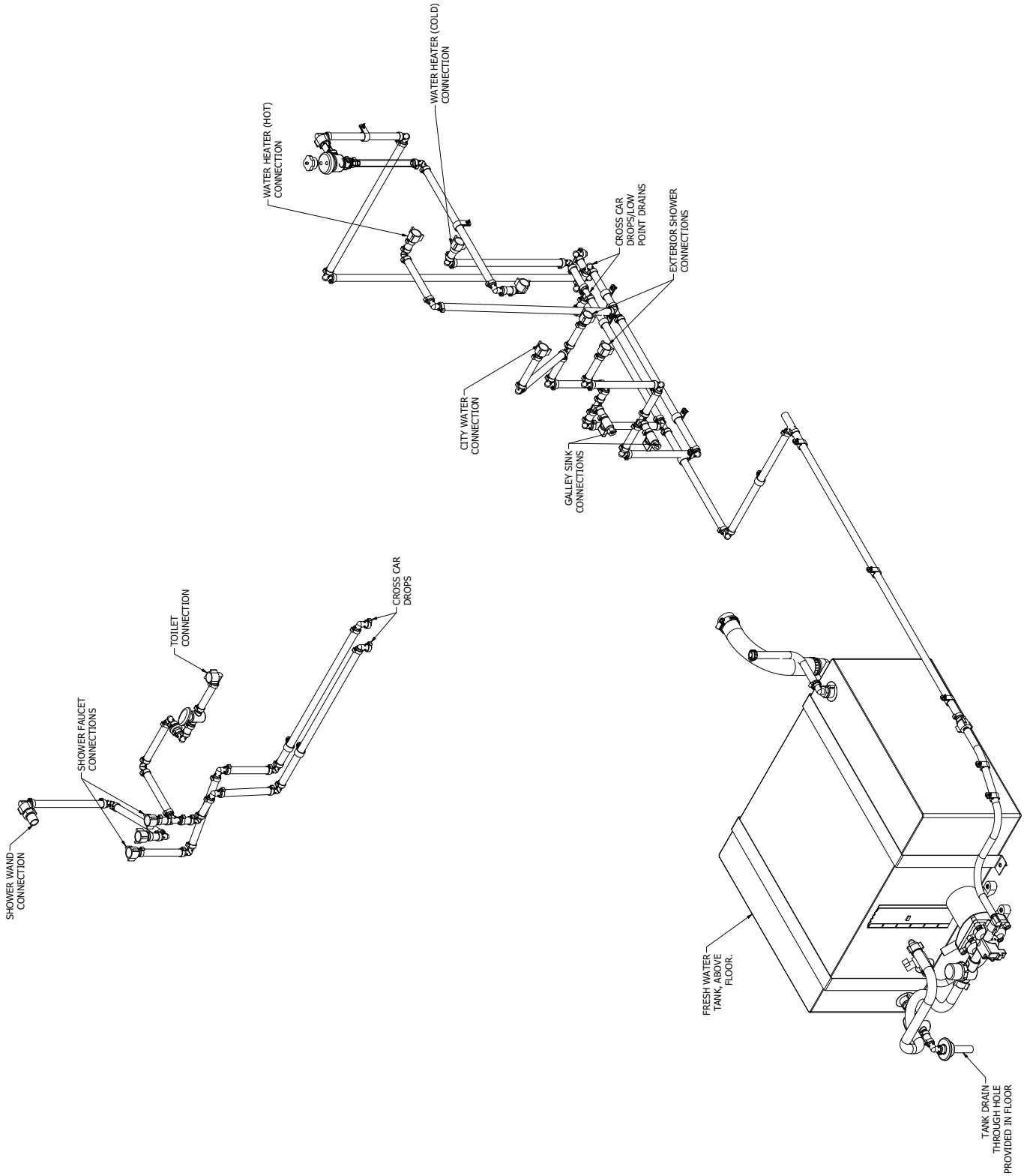

19CB Bambi

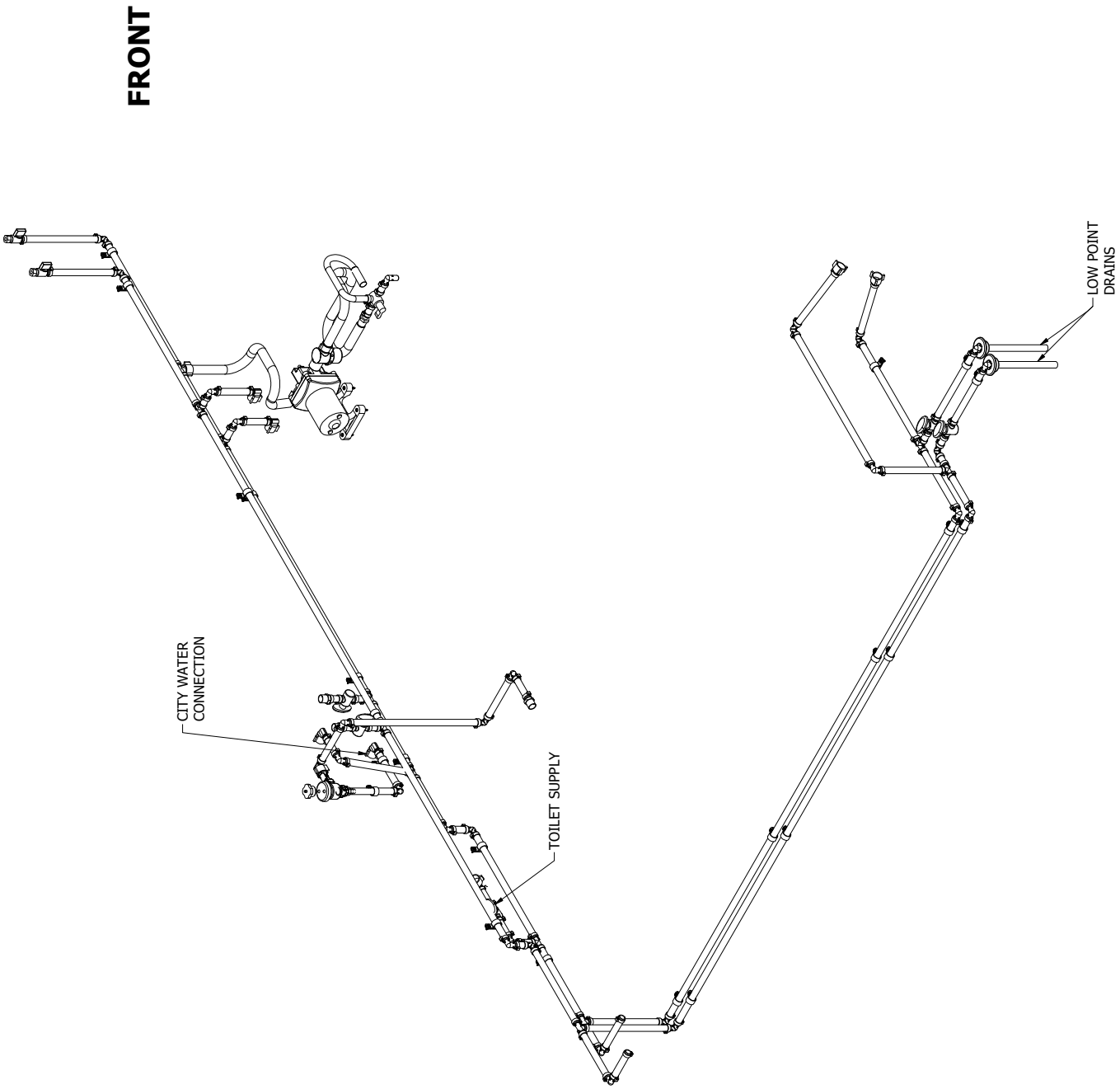
FRONT
CITY WATER CONNECTION
TOILET SUPPLY
LOW POINT DRAINS

20FB Bambi

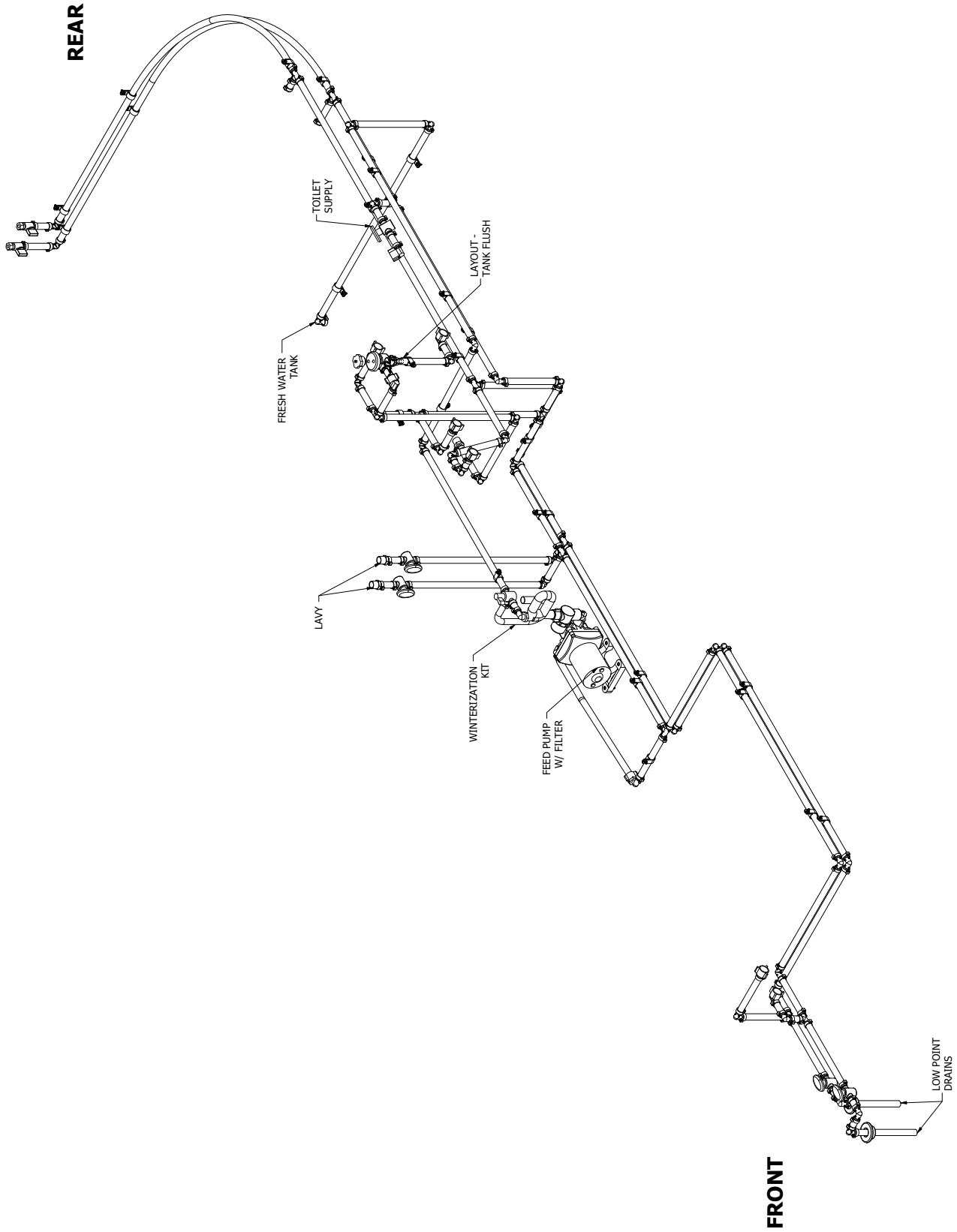
REAR
TOILET SUPPLY
LAYOUT - TANK FLUSH
FRESH WATER TANK
LAVY
WINTERIZATION KIT
FEED PUMP W/ FILTER
LOW POINT DRAINS
FRONT

22FB Bambi

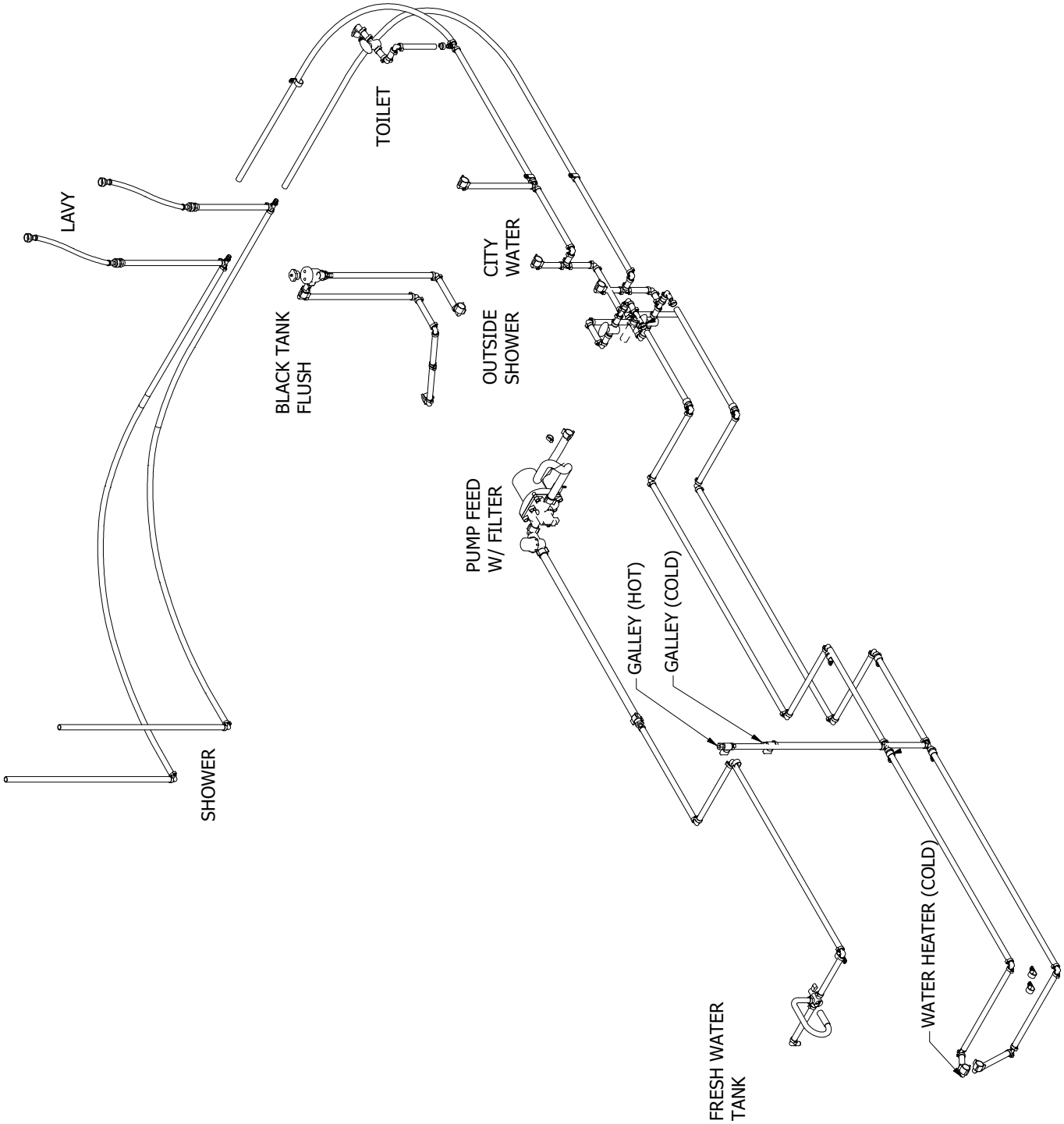
LAVY
TOILET
BLACK TANK FLUSH
CITY WATER
OUTSIDE SHOWER
PUMP FEED W/ FILTER
GALLEY (HOT)
GALLEY (COLD)
SHOWER
FRESH WATER TANK
WATER HEATER (COLD)

FAQs and Answers

Electrical

1. What size of generator is needed to operate my Airstream?

Answer: A 1000 watt generator may be used to charge just the batteries. However, if wanting to run appliances such as microwave or AC units, it is recommended to have at least 4,000 watts or more. (This is for a 30-Amp system). Many Airstreamer's accomplish this using two portable generators run in parallel.

2. I was told my Airstream is pre-wired for solar panels. What does this mean?

Answer: Wiring has been installed throughout your unit for the solar package Airstream is currently using. For more information on solar packages, you may wish to contact your Airstream dealer. Also, see Solar System on page 5-16.

3. What type of batteries are in an Airstream?

Answer: For information about the different types of batteries, see Batteries on page 8-10 and refer to the battery manufacturer's information for details specific to the type of battery you chose for your Airstream.

4. Do you recommend using a surge protector when plugged into shore power?

Answer: Your Airstream is breaker protected. However, with the use of more personal electronic devices and the number of RV users in parks, added protection is always a plus.

5. What is the battery disconnect switch function?

Answer: It is a switch that disengages or engages the 12-volt power supply from the house batteries to everything but the LPG detector. The switch is used to cut power when the trailer is not being used or put into storage to preserve battery charge; see Battery Disconnect Switch on page 5-7.

6. What does the power converter do in my trailer?

Answer: The converter takes 120-volt AC shore power and turns it into 12-volt DC to keep batteries charged and power 12-volt items in your trailer.

7. What can I do if the power jack will not function?

Answer: The jack may be raised and lowered using the hand crank provided. Check for 12V power and proper grounding at the jack. For more information, see Power Jack on page 6-7 and see Power Jack on page 8-9.

Plumbing

1. While parked at my site do you recommend leaving my dump valves open?

Answer: You cannot leave your black water valve open. This would cause a buildup inside the tank. You need to keep this closed until you are full or ready to leave. (Remember, use your no-fuss flush.)

2. How do I use my black water tank flush?

Answer: First, empty your black water tank, then close your black water tank valve. Hook up your hose to the external hookup, run a couple minutes, and then open the valve. Do this a couple times until clear; see Black Water Tank Flush on page 8-15.

3. Do I need a water regulator?

Answer: No, your Airstream is equipped with a built in regulator rated for 50 PSI.

4. How do I get fresh water into my trailer?

Answer: You can use the on board fresh water tank and 12-volt pump for your water supply when boon docking, or hook to an external water source via garden hose to exterior water inlet when parked at a campground; see Gravity Water Fill on page 6-5 and see City Water Hookup on page 6-5.

5. What is the difference between a gray water tank and the black water tank?

Answer: The gray water tank holds water from shower and sink drains. The black water tank holds sewer water from the toilet.

Audio-Video

1. My TV reception is poor. What can I check?

Answer: Verify your antenna booster is set to proper selection. (ON- for antenna, and OFF- for cable satellite). You should also make sure connections are tight on your TV; see TV/Radio Antenna on page 5-11.

Appliances

1. I am planning for a trip in my Airstream. How should I get the refrigerator cooled down?

Answer: Cooling time will vary with exterior temperatures and time of day. Start by pre-cooling your refrigerator at least 12 hours prior to loading your refrigerator. Always pre-cool food in your refrigerator or freezer to reduce cooling time. Do not pack food too tight in compartment as to prevent circulation around food items. Normal refrigerator operating temperatures are 34ºF to 40ºF.

2. The heat pump in my trailer does not seem to be providing any heat, yesterday it worked great.

Answer: The heat pump is designed to knock the chill off your trailer. It functions when outside temperature is 45ºF or greater by removing heat from the outside air. Below 45ºF it will not provide heat.

3. My air conditioner freezes up. What is the problem?

Answer: In high humidity conditions, the AC manufacturer recommends you operate your AC (manual mode) on the high fan setting and all vents should be open to have maximum air flow over the coils; this helps reduce icing. Also, dirty air conditioner filters can restrict air flow and cause the AC to ice up.

Maintenance

1. Where can I find my trailer serial number?

Answer: A label is attached on the roadside sheet at the front side sheet seam. This label will also provide the inflation pressure of the tires and GVWR. The serial number of the trailer is also stamped on the street side of the A frame by the LPG tanks.

2. Awning suggestions:

Your Zip Dee awning is intended to provide shade. Your awning can be used in light rain conditions if front or rear is tilted to let water run off. Light winds should not affect awning use. If you are leaving your trailer for long periods or in threatening weather, the awning should be retracted. Visit https://support.airstream.com to view User Guide Videos on this subject.

3. Cleaning the exterior of my Airstream. Suggestions:

Airstream recommends washing the trailer using a mild auto detergent safe for clear coated surfaces. Airstream recommends washing based on operating conditions and waxing a minimum of twice a year. Walbernize Superseal is a product that was designed specifically for Airstream and provides good wax protection; see Cleaning on page 6-2.

4. Can I use a nylon cover for my Airstream?

Answer: Airstream does not recommend using any type of cover. The installation and movement of the cover in windy conditions could scratch the clearcoat.

5. My main door is hard to open, is this normal?

Answer: Your main door is designed differently than a flat surface door. The door is over bent in order to apply more pressure at the top and bottom of door for better sealing. Also, on uneven surfaces the trailer can be in a slight twist that could affect closing. Make sure trailer is as level as possible. For more information, see Main Door Care on page 8-17

6. What should I use to clean the aluminum on the interior of my Airstream?

Answer: The interior aluminum is the same as the exterior aluminum and has a clear coat finish and could be cleaned the same way. For an easy, no mess suggestion, we recommend using a product such as lemon Pledge® for a quick way to remove finger prints and smudges. Also, see General Information and Cleaning on page 5-3.

7. How do I clean my drapes and upholstery?

Answer: Drapes may be dry-cleaned. Upholstery may be spot-cleaned. We recommend dry-cleaning as the best overall cleaning solution. For interior cleaning instructions, see General Information and Cleaning on page 5-3.

8. What is a rubber torsion axle?

Answer: Your trailer has Dexter rubber torsion axles, this type of axle has internal rubber cords that provide load carrying capacity versus leaf spring type axles. Reminder - never jack up trailer using rubber torsion axle tubes; see Axle and Running Gear Assembly on page 6-7.

9. My windows are sticking and don't open easily; what is wrong?

Answer: Your windows have rubber seals around the edges which in extreme, heat and dusty conditions can become sticky. You can help prevent this by regularly cleaning window seals with soapy water and applying a silicone product or Aerospace Protectant 303 to the seals. Clean edge of glass also. For more information, see Windows on page 8-17

10. The mattress in my Airstream is an odd shape, where can I buy sheets?

Answer: Airstream has a selection of sheets for your Airstream and can be purchased by calling (937) 596-6111 extension 7400 or 7418. You can also access our store website at https://www.airstreamsupplycompany.com.

NOTES

Index

A

Air Conditioner 5-12
Airstream Academy ii
Airstream Connected, Wi-Fi 5-11
Alarm 2-3
Aluminum Wheels 6-2
Appliances 5-12
Awning 6-4
Axles 8-8

B

Battery 5-7, 5-15, 8-10
Battery Disconnect Switch 5-7
Bearings 8-8
Black and Gray Water Tank Draining 8-14
Black Water Tank Dumping 8-14
Black Water Tank Flush 8-15
Brakes 7-2, 8-9
  Electronic Brake Controller 7-2
  Proper Electric Brake Use 7-2
Breakaway Switch 7-3, 8-9
Breakers 5-9

C

Camber 8-8
Camping 3-7
  Effects Of Prolonged Occupancy 3-9
  Extended Stay 3-8
  Pre-Travel Check List 3-7
Carbon Monoxide 2-5
  Detector 2-4
  Important Safety Precautions 2-5
  Symptoms of Carbon Monoxide Poisoning 2-6
Ceiling Vent Fan 5-13
Chemical Sensitivity 2-2
Circuit Breakers 8-3
  Breaker Test 5-11
City Power 5-10
City Water Hookup 6-5
Cleaning
  Exterior 6-2
  Interior 5-3
Clothesline 5-4
Coach-Net 3-6
Converter 5-8
  Converter Operation 5-9
Cooktop 5-12
Cordset 6-6
Curtains 5-3

D

Detectors 2-3
Dinette 5-4
Door 6-3
  Lubrication and Adjustment 8-17
  Main Door 6-3
  Screen Door 6-3
Doormat and Rug Selection 5-4
Drain and Waste System 5-5
Drain System Cleaning 8-15
Drain Valves 8-12

E

Electrical 5-7
  7-Way Plug 7-5
  12-Volt Power Circuits 5-8
  12-Volt System Information 5-7
  City Power 5-10
  Shoreline Power Supply 6-6
Electrical Diagrams 8-18
Emergency Escape Windows 6-4
Exhaust Fans 5-13
Exhaust Vent 5-13

F

Fan 5-13
FAQs and Answers 8-32
Faucets 5-6
Filters 8-4
Fire Extinguisher 2-7
Flooring 5-4
Floor Plans 4-2
Formaldehyde 2-3
Freeze Damage Protection 3-12
Fresh Water Layouts 8-28
Fresh Water Tank Draining 8-13
Front End Protection 6-4
Furnace 5-13, 5-14
Fuses 5-9

G

Gas Regulator 6-8
GFCI 5-10
Gravity Water Fill 6-5

H

Hitch 6-7
  7-Way Plug 7-5
  Hitching Up 7-4
  Measuring Hitch Ball Height 4-4
Hitch/Coupler 6-7
Hitching Up 7-4

J

Jack 3-9
  Power Jack 6-7, 8-9
  Stabilizing Jacks 3-9
  Tire Changing 8-5
Jack Location 8-5

L

Leveling 3-8
License Plate LED 8-3
Lighting 5-4, 8-3
Liquid Petroleum Gas 6-8
  Detector 2-4
  Detector Test 2-4
  Low Voltage 2-4
Load Distribution
  Equalizing 7-5
Loading 7-3
LPG 2-4, 5-17, 6-8, 6-10, 8-2, 8-32
  Basic Rules For LPG Safety 2-6
  Detector 2-4
  Fill Valve 6-8
  Port 6-10
  Safety 2-6, 6-10
  Tanks 6-9
LPG Port 6-10
Lug Nut Torquing 2-2, 8-8
Lug-pattern sequences 8-8

M

Main Door 6-3, 8-2
  Lubrication and Adjustment 8-17
Maintenance Schedule 8-2
Micro-Controller Operation 5-9
Microwave Oven 5-14
Mold 2-2, 3-3, 3-5, 3-10

O

Outlets 5-10
  120-Volt Outlet 6-6
Overnight Stop 3-8

Index

P

Parts 8-3
Plumbing 5-5
Power 5-10
Power Center 5-8
Power Head
  Maintenance 8-9
Power Inlet and Cordset 6-6
Power Jack 6-7, 8-9

R

Read a Water or Sewer Tank Level 5-14
Refrigerator 5-15
Restoring Service After Winter 8-17
Roadside Assistance 3-6
Rug Selection 5-4

S

Safety 2-2, 2-7
  Controlling Sway, Fishtailing 7-7
Sanitizing 8-13
Satellite 6-6
Screen Door 6-3
Service 3-6
Shell Protection 6-4
Shoreline Power Inlet and Cordset 6-6
Shower, Exterior 6-5
Shower, Interior 5-4
Sinks 5-3
SmartPlug Cordset 6-6
SmartPlug Inlet 6-6
Smoke Alarm 2-3
Solar System 5-16
  Solar Panel Wiring 8-27
Spare Tire Carrier 8-8
Specifications 4-3
Stabilizing Jacks 3-9
Step 6-3
Stone Guards 6-4
Sway Control Device 7-8

T

Tanks
  Drain System Cleaning 8-15
  Fresh Water Tank Draining 8-13
  Waste and Gray Water Tank Draining 8-14
Thermostat 5-14
Tires 8-5
  Tire Changing 8-5
Toe-In 8-8
Toilet 5-6
Touch-up 8-4
Towing 2-2
  7-Way Plug 7-5
  Backing Up 7-7
  General Information 7-5
Tow Vehicle 7-2
Trailer
  Weight 7-4
TV/Radio Antenna 5-11
TV/Satellite Inlets 6-6

U

Upholstery 5-3
User Guide Videos ii

V

Vent 5-13
  Ceiling Vent Fan 5-13
  Exhaust Vent 5-13
Ventilation 2-2, 2-3
Vinyl Flooring 5-4

W

Warranty 3-2
  Obtaining Warranty Service 3-4
Waste Water System 3-10
Water Fill 6-5
Water Heater 5-17
Water Pump 5-5
  Access Locations 8-12
  Strainer Cleaning 8-12
Water System 5-5
Weighing Your Trailer 7-4
Weight Distribution 2-2
Wheel Bearing Maintenance 8-8
Wi-Fi 5-11
Windows 8-17
  Emergency Escape Windows 6-4
  Sticking Windows 8-17
Window Stone Guards 6-4
Winterizing and Storage 8-15
Winter Traveling 3-12
Woodwork 5-3

“Wherever you camp, wherever you stay, leave it cleaner than when you arrived. Not just as clean, but cleaner.” – Wally Byam

At Airstream, we take environmental awareness seriously, and we’ve made it our mission to Leave it Beautiful. That phrase is not just a marketing campaign – it’s a reminder that together we can make a difference. Leave it Beautiful is a call to action to pick up the litter, toss it in a can, and not simply step over it and pass it by. Your purchase of a new Airstream will open doors to new experiences and places you’ve only dreamed of – but it takes all of us working together to ensure those places remain pristine, accessible, and ready for the next adventure.

JOIN AIRSTREAM IN A COMMUNITY EFFORT TO

leave it beautiful™

brought to you by AIRSTREAM

AIRSTREAM®

1001 West Pike Street
P.O. Box 629
Jackson Center, OH. 45334-0629
Phone: (937) 596-6111 Fax: (937) 596-7939
www.airstream.com