AIRSTREAM®

OWNER'S MANUAL

2026

Globetrotter

Live Riveted®

User Guide Videos and Airstream Academy

Scan the QR code on the cover or visit https://support.airstream.com to view model-specific User Guide Videos that explore topics discussed in this manual. Visit Airstream Academy at https://www.airstream.com/academy/ to learn the ins and outs of Airstreaming by exploring videos, articles, and frequently asked questions covering a wide range of popular RV topics.

California Consumers

CALIFORNIA CONSUMERS: To comply with California's Song Beverly Consumer Warranty Act pre-litigation notice requirements (described at California Code of Civil Procedure Section 871.24), written notice can be sent to Airstream, Inc., either by email sent to the following email address: support@airstream.com, or by certified or registered mail, return receipt requested, sent to the following address: Airstream, Inc., 428 West Pike Street, P.O. Box 629, Jackson Center, Ohio 45334-0629, Attention: Owner Relations Department.

CONSUMIDORES DE CALIFORNIA: Para cumplir con los requisitos de notificacion previa al litigio de la Ley de Garantia del Consumidor Song Beverly de California (descritos en la Sección 871.24 del Código de Procedimiento Civil de California), se puede enviar una notificación por escrito a Airstream, Inc., ya sea por correo electrónico a la siguiente dirección de correo electrónico: support@airstream.com, o por correo certificado o registrado, con acuse de recibo, enviado a la siguiente dirección: Airstream, Inc., 428 West Pike Street, P.O. Box 629, Jackson Center, Ohio 45334-0629, Attention: Owner Relations Department.

Disclaimer And Copyright

All information, illustrations and specifications contained in this manual are based on the latest product information available at the time of publication approval. If and when new materials and production techniques are developed that can improve the quality of its product, or material substitutions are necessary due to availability, Airstream reserves the right to make such changes.

Airstream Globetrotter® Owner's Manual

©2026 Airstream, Inc. All rights reserved

Publication Date: January 2026

REV# 03

AIRSTREAM®

TABLE OF CONTENTS

INTRODUCTION . . . 1-1
SAFETY . . . 2-1
- Safety Precautions . . . 2-2
- Chemical Sensitivity and Ventilation . . . 2-2
- Alarms and Detectors . . . 2-3

GENERAL INFORMATION . . . 3-1
- 2-Year Bumper-to-Bumper and 5-Year Structural Limited Warranties . . . 3-2
- Service . . . 3-5
- Camping . . . 3-6

FLOOR PLANS AND SPECIFICATIONS . . . 4-1
- Floor Plans . . . 4-2
- Specifications . . . 4-3

INTERIOR . . . 5-1
- Interior Features and Care . . . 5-3
- Plumbing . . . 5-7
- Electrical System Overview . . . 5-10
- Electrical System Operation . . . 5-14
- Entertainment Systems . . . 5-19
- Appliances . . . 5-20

EXTERIOR . . . 6-1
- Exterior Features and Care . . . 6-2
- Water Service . . . 6-6
- Electrical Service . . . 6-7
- Connectivity . . . 6-7
- Chassis Features . . . 6-8
- LP Gas System . . . 6-10

TOWING . . . 7-1
- Tow Vehicle . . . 7-2
- Brakes . . . 7-2
- Loading . . . 7-3
- Hitching Up . . . 7-5
- Towing . . . 7-6

MAINTENANCE . . . 8-1
- Maintenance Schedule . . . 8-2
- Airstream Service and Parts . . . 8-3
- Tires . . . 8-3
- Axles and Brakes . . . 8-8
- Power Jack . . . 8-9
- Water Pump . . . 8-10
- Fresh Water System . . . 8-10
- Drain and Waste System . . . 8-12
- Winterizing and Storage . . . 8-14
- Main Door Care . . . 8-16
- Windows . . . 8-16
- Electrical Diagrams . . . 8-17
- Fresh Water Layouts . . . 8-32
- FAQs and Answers . . . 8-35

NOTES

AIRSTREAM®

Section 1
INTRODUCTION

The Owner's Manual for your new Airstream trailer is designed to respond to the most frequent inquiries regarding the operation, function, and care of the many systems that make modern trailering a joy.

Airstream realizes our customers possess varying degrees of expertise in the area of maintaining and repairing the appliances in their trailer. For this reason, the service information found in this manual is directed toward those with average mechanical skills.

We also realize that you may be more familiar with one area than you are with another. Only you know your capabilities and limitations. We want you to use this manual and hope you will find the information contained in it useful. However, should you ever feel that you may be in need of assistance, please consult your Airstream dealer for advice on service that may be required.

A brief explanation of the operation of the appliances such as refrigerator, furnace, water heater, and others, are explained in this manual. However, you will also find the manufacturer's information, supplied in a packet included with this manual, to be more detailed.

All information, illustrations, and specifications contained in this manual are based on the latest product information available at the time of publication approval. If and when new materials and production techniques are developed that can improve the quality of its product, or material substitutions are necessary due to availability, Airstream reserves the right to make such changes.

Optional items may be available on all, or particular models. Additionally, some optional items can only be included during the manufacturing phase and cannot later be added to the trailer.

The inclusion of optional items information in this manual does not imply or suggest the availability, application, suitability, or inclusion for any specific unit.

Airstream uses the ⚠ safety alert symbol and signal words Danger, Warning, and Caution to alert you to potential personal injury hazards. Obey all safety messages that follow this symbol to avoid possible injury or death. The following are examples of each type of signal word, safety message, and information message found throughout this manual.

⚠ DANGER

Indicates a hazardous situation which, if not avoided, will result in death or serious injury.

⚠ WARNING

Indicates a hazardous situation which, if not avoided, could result in death or serious injury.

⚠ CAUTION

Indicates a hazardous situation which, if not avoided, could result in minor or moderate injury.

NOTICE

Indicates a potential situation which, if not avoided, may result in damage to your Airstream. Addresses practices not related to personal injury.

NOTE

Provides noteworthy information and tips about your Airstream.

AIRSTREAM®

Section 2
SAFETY

SAFETY PRECAUTIONS 2-2
- Transporting of Passengers 2-2
- Towing and Weight Distribution. 2-2
- Controlling Sway 2-2
- Lug Nut Torquing 2-2
- Tire Safety 2-2
- Appliances and Equipment 2-2
- Mold 2-2

CHEMICAL SENSITIVITY AND VENTILATION . . 2-2
- Chemical Sensitivity 2-2
- Formaldehyde 2-3
- Ventilation 2-3
- Do Not Smoke 2-3
- Medical Advice 2-3

ALARMS AND DETECTORS 2-3
- Smoke Alarm. 2-3
- Liquid Propane Gas (LPG)/Carbon Monoxide (CO) Detector 2-4
  - Low Voltage 2-4
  - Detector Test 2-4
  - This Carbon Monoxide Detector Is Not . . 2-5
  - Important Safety Precautions 2-5
- What Is Carbon Monoxide 2-5
  - Conditions that can result in potentially dangerous CO situations 2-6
- Symptoms of Carbon Monoxide Poisoning . . 2-6
- Basic Rules For LPG Safety 2-6
  - If You Smell Gas 2-7
- Fire Extinguisher 2-7
- Safety 2-7

Safety Precautions

Many things can be construed as safety related, but the most important is your common sense. If you are careless with matches, cigarettes, flammable material, or any other hazardous material, you surely realize your potential for accidents is greatly increased.

You will find many safety recommendations in this section and throughout the manual. The following recommendations are the ones we consider to be the most important.

Transporting of Passengers

The transporting of people in the trailer puts their lives at risk and may be illegal. The trailer does not have seat belts, therefore, it is not designed to carry passengers.

⚠ WARNING

Never transport passengers inside a trailer. Towing a trailer with passengers inside is unsafe and could result in death or serious injury.

Towing and Weight Distribution

Weight distribution is an important factor when loading your travel trailer. A recreational vehicle with the cargo distributed properly will result in efficient, trouble-free towing; see Loading on page 7-3.

Controlling Sway

Sway or fishtailing is the sideways action of a trailer caused by external forces. Excessive sway of your travel trailer can lead to the rollover of the trailer and tow vehicle, resulting in serious injury or death; see Controlling Sway or Fishtailing on page 7-8.

Lug Nut Torquing

Making sure wheel mounting nuts (lug nuts) on trailer wheels are tight and properly torqued is an important responsibility that trailer owners and users need to understand and practice. Inadequate and/or inappropriate wheel nut torque (tightness) is a major cause of lug nuts loosening in service. Loose lug nuts can rapidly lead to a wheel separation, resulting in potentially serious safety consequences; see Lug Nut Torquing on page 8-7.

⚠ WARNING

Use a torque wrench to tighten lug nuts. Tightening by hand or with an impact wrench is not recommended. For lug nut torque values, see Specifications on page 4-3.

Tire Safety

Properly maintained tires improve the steering, stopping, traction, and load-carrying capability of your vehicle; see Tire Care on page 8-5. Also, be sure to read the Tire Safety Manual Addendum included with your owner's packet.

Appliances and Equipment

The appliances (stove) and equipment (hot water heater, furnace, etc.) typically operate on liquefied petroleum LP gas. LP gas is flammable and is contained under high pressure. Improper use may result in a fire and/or explosion. Make sure to follow all instructions and warnings in this manual as well as those in the specific owner's manuals of the appliances and equipment.

NOTE

For additional LPG warnings and safety information, see Section 5 and Section 6.

Mold

Mold and mold spores exist throughout indoor and outdoor environments. There is no practical way to eliminate all mold and mold spores in the indoor environment; however, the way to control indoor mold growth is to control moisture; see Inhibiting Mold Growth on page 3-9.

Chemical Sensitivity and Ventilation

Chemical Sensitivity

Immediately after the purchase of your new recreational vehicle, and sometimes, after it has been closed up for an extended period of time, you may notice a strong odor and/or experience a chemical sensitivity. This is not a defect in your recreational vehicle. Like your home, there are many different products used in the construction of recreational vehicles, such as carpet, linoleum, plywood, insulation, upholstery, etc. Formaldehyde is also the by-product of combustion and numerous household products, such as some paints, coatings, and cosmetics. However, recreational vehicles are much smaller than your home and therefore, the exchange of air inside a recreational vehicle is significantly less than in a home. These products, when new or when exposed to elevated temperatures and/or humidity, may off-gas different chemicals, including formaldehyde. This off-gassing, in combination with the minimal air exchange, may cause you to experience irritation of the eyes, nose, and throat, as well as sometimes headache, nausea, and a variety of asthma-like symptoms. Elderly persons and young children, as well as anyone with a history of asthma, allergies, or lung problems, may be more susceptible to the effects of off-gassing.

Formaldehyde

Formaldehyde is a naturally occurring substance and is an important chemical used widely by industries to manufacture building materials and numerous household products. It is also a by-product of combustion and certain other natural processes. Thus, it may be present inside the trailer with some individuals being sensitive to it. Ventilation of the unit normally reduces the exposure to a comfortable level.

Trace levels of formaldehyde are released from smoking; cooking; use of soaps and detergents, such as carpet shampoos, cosmetics; and many other household products. Some people are very sensitive to formaldehyde while others may not have any reaction to the same levels of formaldehyde. Amounts released decrease over time.

Your Airstream trailer was manufactured using low formaldehyde-emitting (LFE) wood products, use of which is typical in the recreation vehicle industry. Formaldehyde has an important role in the adhesives used to bind wood products used in recreation vehicles. The wood products in your trailer are designed to emit formaldehyde at or lower than industry guidelines and should not produce symptoms in most individuals.

While LFE wood products typically do not emit formaldehyde at a level that would cause symptoms in most individuals, it is possible, though not likely, for that to occur when the trailer is not properly ventilated. Ventilation is an essential requirement for trailer use, for many reasons. Any effects of formaldehyde can be greatly reduced by actions such as opening windows, opening roof vents, running the air conditioner, or some combination thereof. In addition, the emission of formaldehyde by these products naturally decreases rapidly over time.

Airstream strongly suggests that you take measures to properly ventilate your trailer on a regular basis. If you have any questions with respect to proper ventilation of your trailer, please do not hesitate to contact your dealer or Airstream.

Ventilation

To reduce or lessen exposure to chemicals from off-gassing, it is of utmost importance that you ventilate your recreational vehicle. Ventilation should occur frequently after purchase and at times when the temperatures and humidity are elevated. Remember, off-gassing is accelerated by heat and humidity. Open windows, exhaust vents, and doors. Operate ceiling and/or other fans, roof air conditioners, and furnaces. Use a fan to force stale air out and bring fresh air in. Decreasing the flow of air by sealing the recreational vehicle increases the formaldehyde level in the vehicle's indoor air.

Do Not Smoke

It is recommended you do not smoke inside your recreational vehicle. In addition to causing damage to your recreational vehicle, tobacco smoke releases formaldehyde and other toxic chemicals.

Medical Advice

Questions regarding the effects of formaldehyde on your health should be submitted to your doctor or local health department.

Alarms and Detectors

Smoke Alarm

A smoke alarm is provided with your trailer. A manual pertaining to the alarm is included in the paperwork given to you at the dealership. Please read and follow all care, maintenance, and safety information contained in the smoke alarm manual.

The smoke alarm will beep once a minute for at least 30 days when the battery is weak. The battery must immediately be replaced with a fresh one.

⚠ WARNING

Alarm battery is shipped deactivated. Check your alarm for proper battery installation. To activate battery, new Airstream owner's must install included battery to proper orientation.

⚠ WARNING

Smoke alarms have a limited life. The unit should be replaced immediately if it is not operating properly. You should always replace a smoke alarm after 10 years from the date of purchase. Write the purchase date on the space provided on the back of unit.

If service is required or you have not received a smoke alarm user's manual, please contact the manufacturer, your dealer, or Airstream Customer Service.

Liquid Propane Gas (LPG)/Carbon Monoxide (CO) Detector

This detector has a five-year life; see end-of-life notification in the detectors manual. Please read the entire detector manual before operating the unit.

⚠ WARNING

Activation of your Carbon Monoxide alarm's audible horn indicates the presence of Carbon Monoxide that can kill you. Leave the area immediately!

⚠ WARNING

Failure to replace this product by the "REPLACE BY DATE" printed on the alarm may result in death by Carbon Monoxide poisoning. Replace By Date is five (5) years from the date of manufacture.

The LPG/CO detector is located in the galley area. LPG is a mixture of gases produced and sold commercially as a fuel for heating and cooking appliances. LPG is highly flammable and, as a result, can be explosive if ignited under certain circumstances. LPG is heavier than air and, if confined in a closed space, will accumulate close to the floor. The LPG/CO detector is designed to alarm when propane gas exceeds 10% of the lower-explosive-limit for more than 30 seconds or if CO gas reaches unsafe levels. When propane gas is detected the horn will sound with constant beeps and the red LED will be on. If CO gas is detected the horn will sound with 4 rapid chirps followed by a 4 second pause and the red LED will flash rapidly.

Your LPG/CO detector is wired directly to your trailer battery and incorporates a 1-amp, in-line fuse. It has no internal battery backup. In normal stand-by mode, the LED indicator will be green.

Low Voltage

The operating voltage for the detector is 12 VDC. The actual voltage supplied to the detector in a recreational vehicle may drop below the minimum 8 VDC. The detector provides the user with a low voltage warning before reaching that level and will provide additional distinct, clear warnings and alarms after the 8 VDC level is reached. However, if available power supplied to the unit is below the operating voltage of 8 VDC, the detector will not detect gas or provide protection against dangerous levels of LPG.

⚠ WARNING

If the low voltage warning sounds, the detector will need to be reset by disconnecting the battery, before normal operation will occur.

Detector Test

If the Silence/Test button is pressed while in normal operation, the alarm will perform a self test of the CO sensor, propane sensor and battery voltage. It is recommended to perform a self test weekly, after power up from storage, and before each trip. If the self test passes, the alarm will perform 2 cycles of the CO horn pattern (4 rapid chirps followed by a 4 second pause), followed by 2 cycles of the propane horn pattern (constantly beeping).

⚠ WARNING

Activation of this detector indicates the possible presence of LPG, which can cause an explosion and/or fire, causing serious injury or death. This normally indicates a leak in the LPG installation or an LPG appliance. Extinguish all open flames, open your windows and door, and evacuate the unit immediately. Do not activate any electrical switch. Turn off the LPG at your gas tank(s). Do not re-enter your trailer until a qualified repair technician has corrected the problem and certified the system as safe.

⚠ WARNING

Have a qualified technician check your LPG system annually or if you detect any signs of leaks or malfunctions.

NOTE

For additional LPG warnings and safety information, see Section 5 and Section 6.

⚠ WARNING

Airstream recommends shutting off the gas supply at the LPG tanks before refueling the tow vehicle or entering a refueling station.

⚠ WARNING

This product is intended for use in ordinary, indoor locations of family living units. It is not designed to measure compliance with occupational safety and health administration (OSHA) commercial or industrial standards. Individuals who are at special risk from Carbon Monoxide exposure by reason of age, pregnancy, or medical condition may consider using warning devices which provide audible and visual signals for Carbon Monoxide concentration under 30 ppm. If in doubt, consult your medical practitioner.

NOTICE

It is not recommended that the detector be disconnected from the battery during periods of storage. There is a small heater on the sensor of the device that burns away impurities in the air during periods of normal use. During periods when power is interrupted, impurities can build up on the sensor. When power is returned to the detector, the detector alarm may activate until the impurities are burned off. This could take a number of hours, during which time the alarm will be constantly on.

This Carbon Monoxide Detector Is Not

- Designed to detect smoke, fire, or any gas other than Carbon Monoxide.
- To be seen as a substitute for the proper servicing of fuel-burning appliances.
- To be used on an intermittent basis, or as a portable alarm for spillage of combustion products from fuel-burning appliances.

⚠ WARNING

This Carbon Monoxide detector is designed for indoor use only. Do not expose to rain or moisture. Do not knock or drop the alarm. Do not open or tamper with the alarm as this could cause malfunction. The detector will not protect against the risk of Carbon Monoxide poisoning when the batteries are dead or missing. The alarm will only indicate the presence of CO gas at the sensor.

Important Safety Precautions

- Carbon Monoxide is produced by the incomplete combustion of fuels such as wood, charcoal, coal, heating oil, paraffin, gasoline, natural gas, propane, butane, etc.
- Ideally, it is recommended that a Carbon Monoxide detector should be installed in or near every room that has a fuel burning appliance such as any room heaters, water heaters, cookers, grills, etc.
- Ensure the alarm horn can be heard by all those who are intended to hear it. Seek medical help if it is suspected that a user of the RV is suffering from Carbon Monoxide poisoning.
- If the alarm sounds, make sure to investigate the problem. Ignoring the alarm may result in sickness, injury, or death. (CO may be present even if nothing is seen or smelled by the user.)
- Room spaces should be well ventilated when household cleaning supplies are used as these may cause a false alarm.
- Alarm should be tested once per week. If further details are required which do not appear in this manual, contact BRK Brands Inc. First Alert.

What Is Carbon Monoxide

Carbon Monoxide (CO) is a highly poisonous gas that is released when fuels are burned. It is invisible, has no smell, and is therefore very difficult to detect with the human senses. Under normal conditions, in a room where fuel-burning appliances are well maintained and correctly ventilated, the amount of CO released into the room by appliances is not dangerous.

These fuels include wood, coal, charcoal, oil, natural gas, gasoline, kerosene, and propane. Common appliances are often sources of CO. If they are not properly maintained, are improperly ventilated, or malfunction, CO levels can rise quickly. CO is a real danger in air-tight trailers with added insulation, sealed windows, and other weatherproofing that can trap CO inside.

Conditions that can result in potentially dangerous CO situations

1. Excessive spillage or reverse-venting of fuel-burning appliances caused by outdoor conditions, such as:
   - Wind direction and/or velocity, including high gusts of wind.
   - Heavy air in the vent pipes (cold/humid air with extended periods between cycles).
   - Negative pressure differential resulting from use of exhaust fans.
   - Simultaneous operation of several fuel-burning appliances competing for limited internal air.
   - Vent-pipe connections vibrating loose from clothes dryers, furnaces, or water heaters.
   - Obstructions in or unconventional vent-pipe designs which can amplify the above situations.
2. Extended use of un-vented fuel burning devices.
3. Temperature increase that can trap exhaust gases near the ground.

Symptoms of Carbon Monoxide Poisoning

- Mild Exposure - Slight headache, nausea, vomiting, fatigue (flu-like symptoms).
- Medium Exposure - Throbbing headache, drowsiness, confusion, fast heart rate.
- Extreme Exposure - Convulsions, unconsciousness, heart and lung failure. Exposure to carbon monoxide can cause brain damage and/or death.

⚠ DANGER

Many causes of reported CARBON MONOXIDE POISONING indicate that while victims are aware that they are not well, they become so disoriented that they are unable to save themselves by either exiting the area or calling for assistance. Also young children and pets may be the first to be affected.

⚠ WARNING

Test units used in RVs after the vehicle has been in storage, before each trip, and once a week while in use. Failure to test units used in RV's as described may remove your protection.

Basic Rules For LPG Safety

A warning label is displayed in the cooking area reminding you to provide an adequate supply of fresh air for combustion. The amount of oxygen supply in a trailer is limited due to its compact design. When using the cooking appliances, proper ventilation will prevent dangers of asphyxiation. It is especially important that cooking appliances not be used for comfort heating as the danger of asphyxiation is greater when the appliance is used for long periods of time.

⚠ DANGER

Do not use cooking appliances for comfort heating. Cooking appliances need fresh air for safe operation. Before operation, open an overhead vent or turn on an exhaust fan and open a window.

⚠ DANGER

A warning label has been located near the LPG container. This label reads: DO NOT FILL CONTAINER(S) TO MORE THAN 80 PERCENT OF CAPACITY. Overfilling the LPG container can result in uncontrolled gas flow, which can cause fire or explosion. A properly filled container will contain approximately 80 percent of its volume as liquid LP gas.

⚠ DANGER

Do not store LPG tanks within a vehicle. LPG tanks are equipped with safety devices that vent gas should the pressure become excessive.

⚠ DANGER

Portable fuel burning equipment, including wood and charcoal grills and stoves, shall not be used inside the recreational vehicle. The use of this equipment inside the recreational vehicle may cause fires or asphyxiation.

⚠ DANGER

Do not bring or store LPG tanks, gasoline, or other flammable liquids inside the vehicle because a fire or explosion may result.

Twice a year, or after a long storage period, we suggest you take your trailer in for a checkup and cleaning of the gas-operated appliances.

If You Smell Gas

1. Extinguish any open flames and all smoking materials.
2. Do not touch electrical switches.
3. Shut off the gas supply at the tank valve(s) or gas supply connection.
4. Open doors and other ventilating openings.
5. Leave the area until odor clears.
6. Have the gas system checked and leakage source corrected before using again.

Fire Extinguisher

The fire extinguisher should be checked for charge on a regular basis. Make sure your family knows how to release the extinguisher storage bracket and how to properly operate the extinguisher. Check with your local fire department for professional advice on its operation and use if you find the directions on the extinguisher unclear. They will be able and willing to assist you and your family.

Safety

As always, safety should be a top priority. Ensure you and everyone traveling with you can operate the main door and emergency exit window rapidly, without light. Contemplate other means of escape in case the designated exits are blocked.

The escape windows(s) are identified by their red release handles. Lift up on both latches to release the escape window. Push on the glass and it will swing clear.

⚠ WARNING

The window operation should be checked before each trip and the latches lubricated with silicon spray or an equivalent lubricant every 3 months.

⚠ WARNING

Read the directions on the fire extinguisher carefully. If you have any doubts as to its operation, you and your family should practice, and then replace or recharge the extinguisher. Your local fire department will be able to assist you and answer any questions.

NOTES

AIRSTREAM®

Section 3
GENERAL INFORMATION

2-YEAR BUMPER-TO-BUMPER AND 5-YEAR STRUCTURAL LIMITED WARRANTIES 3-2

SERVICE. 3-5

Coach-Net® Roadside Assistance 3-5

Service Centers 3-5

Reporting Safety Defects 3-5

CAMPING 3-6

Suggested Pre-Travel Check List 3-6

Interior 3-6

Exterior 3-6

Trailer Equipment and Accessories . . . 3-6

Motoring Essentials 3-6

Overnight Stop 3-7

Extended Stay 3-7

Leveling. 3-8

Stabilizing Jacks 3-8

Effects Of Prolonged Occupancy 3-8

Tips To Control Condensation 3-9

Molds 3-9

Contributing Factors To Mold Growth . . . 3-9

Inhibiting Mold Growth 3-9

Winter Traveling 3-10

2-Year Bumper-to-Bumper and 5-Year Structural Limited Warranties

AIRSTREAM
1001 West Pike St., Jackson Center, OH 45334-0629

2026 TRAVEL TRAILER
2-YEAR BUMPER-TO-BUMPER AND
5-YEAR STRUCTURAL LIMITED WARRANTIES

Delivery Date: _____ Airstream Serial Number: _____

PURCHASED BY: _____ PURCHASED FROM: _____

Name: _____ Dealer Name: _____

Address: _____ Address: _____

City/State: _____ Zip: _____ City/State: _____ Zip: _____

THIS LIMITED WARRANTY COVERS: The warranty coverages on your new travel trailer are summarized below. Airstream's Limited Warranty includes two (2) separate warranty coverages. Please read the warranty information that follows for complete details.

- Bumper-to-Bumper Warranty Coverage - The complete travel trailer is covered for 24 months, except for other coverages listed in this Section and those items listed under "What is Not Covered" later in this Limited Warranty.
- Structural Warranty Coverage - The main steel chassis frame, outriggers, cross members, laminated subfloor, aluminum sidewalls, skeletal framing, front and rear caps and roof (collectively, the "Structural Components") are covered for 60 months, except for those items listed under "What is Not Covered" later in this Limited Warranty.

THIS LIMITED WARRANTY COVERS: (i) The first retail owner and any subsequent owners (ii) ONLY those portions of a NEW travel trailer not excluded under the section "What is Not Covered," when sold by an authorized dealership and used for its intended purpose of recreational travel and camping; and, (iii) ONLY defects in workmanship performed and/or materials used to assemble those portions of your travel trailer not excluded under the section "What is Not Covered." "Defect" means the failure of the workmanship performed and/or materials used to conform with the design and manufacturing specification and tolerances of Airstream. This Limited Warranty is transferable, and the subsequent owner's warranty coverage period shall be the unexpired balance of the original warranty coverage period. A completed copy of the Warranty Transfer Form must be submitted to Airstream at the time of resale.

When you request and accept the performance of warranty repairs under the terms of this Limited Warranty, you are accepting all terms of this Limited Warranty, including by way of example, warranty limitations and disclaimers, the forum selection clause and the clause reducing the time period when suit must be filed for breach.

If any term or condition in this Limited Warranty conflicts with your state's Uniform Commercial Code ("UCC") as interpreted by courts within your state, the provisions of your state's UCC are varied as allowed for by USS 1-302.

COVERAGE ENDS: Bumper-to-Bumper warranty coverage ends 24 months after the first retail owner takes delivery of the travel trailer from an authorized dealership. Structural warranty coverage ends 60 months after the first retail owner takes delivery of the travel trailer from an authorized dealership. Delivery occurs when the retail owner takes physical possession of the travel trailer or has alterations done to it, whichever occurs first. ANY ACTION FOR BREACH OF THIS WARRANTY OR ANY IMPLIED WARRANTIES RELATING TO, OR ARISING FROM, THE BUMPER-TO-BUMPER WARRANTY MUST BE COMMENCED NOT MORE THAN 25 MONTHS AFTER DATE OF DELIVERY. ANY ACTION FOR BREACH OF THIS WARRANTY OR ANY IMPLIED WARRANTIES RELATING TO, OR ARISING FROM, THE STRUCTURAL WARRANTY MUST BE COMMENCED NOT MORE THAN 61 MONTHS AFTER DATE OF DELIVERY. Some states do not allow the reduction of the time when a breach of warranty claim must be commenced, so the reduction in time when a breach of warranty claim must be commenced may not apply to you.

LIMITATION OF IMPLIED WARRANTIES: IMPLIED WARRANTIES ARISING UNDER APPLICABLE LAW, IF ANY, INCLUDING BUT NOT LIMITED TO IMPLIED WARRANTIES OF MERCHANTABILITY OR FITNESS FOR A PARTICULAR PURPOSE, ARE HEREBY LIMITED IN DURATION TO THE TERM OF THIS WARRANTY AND ARE LIMITED IN SCOPE OF COVERAGE TO THOSE PORTIONS OF THE TRAVEL TRAILER COVERED BY THIS LIMITED WARRANTY. THERE ARE NO EXPRESS WARRANTIES OR ANY IMPLIED WARRANTIES OF MERCHANTABILITY ON THOSE PORTIONS OF THE TRAVEL TRAILER EXCLUDED FROM COVERAGE. There is no warranty of any nature made by Airstream beyond that contained in this Limited Warranty. No person has authority to enlarge, amend, or modify this Limited Warranty. The dealer is NOT Airstream's agent. Airstream is not responsible for any undertaking, representation, or warranty made by any dealer or others beyond those expressly set forth within this Limited Warranty. SOME STATES DO NOT ALLOW LIMITATIONS ON HOW LONG AN IMPLIED WARRANTY LASTS, SO THE ABOVE LIMITATIONS MAY NOT APPLY TO YOU.

DISCLAIMER OF INCIDENTAL AND CONSEQUENTIAL DAMAGES: Airstream disclaims any and all incidental and consequential damages, including but not limited to expenses such as transportation to and from dealerships and Airstream repair facilities, loss of time, loss of pay, loss of use, inconvenience, commercial loss (including but not limited to lost profits), towing charges, bus fares, vehicle rental, service call charges, gasoline expenses, incidental charges such as telephone calls and facsimile transmissions, and expenses for lodging and moisture damage such as mold and mildew as well as rust and corrosion. This disclaimer is independent of any failure of the essential purpose of any warranties provided with the travel trailer and shall survive any determination that a warranty failed of its essential purpose. Some states do not allow the exclusion or limitation of incidental or consequential damages, so the above limitation or exclusion may not apply to you.

REPAIR REMEDY: Airstream's sole and exclusive obligation is to repair any covered defects discovered within the warranty coverage period if: (1) within 10 days of your discovery of a defect, you notify Airstream OR an authorized dealership of the defect; AND (2) you deliver your travel trailer to Airstream OR an authorized dealership at your cost and expense.

BACK-UP REMEDY: If the primary repair remedy fails to successfully cure any defect after a reasonable number of repair attempts, your sole and exclusive remedy shall be to have Airstream pay an independent service shop of your choice to perform repairs to the defect, which requires the exercise of good faith. If you select an independent service shop, you must notify Airstream to allow it to work directly with the service shop to have repairs performed. The repair remedy and the back- up remedy MUST both be exhausted AND these remedies must fail to fulfill their essential purpose before you can seek other legal or equitable remedies for breach of this express warranty or for breach of any implied warranty. THIS LIMITED WARRANTY IS NOT A WARRANTY THAT PROMISES OR EXTENDS TO FUTURE PERFORMANCE BECAUSE THE WARRANTY DOES NOT MAKE A REPRESENTATION ON HOW YOUR TRAVEL TRAILER WILL PERFORM IN THE FUTURE BUT INSTEAD REPRESENTS ONLY WHAT THE REMEDY WILL BE IF A DEFECT EXISTS.

Unless prohibited by state law, repairs will not extend the time when you must commence a breach of warranty claim and shall not extend the warranty coverage period. Any performance of repairs after the warranty coverage ends OR any performance of repairs to those portions of your travel trailer excluded from coverage shall be considered "good will" repairs. Warranty repairs should be expected. Airstream may use new and/or remanufactured parts and/or components of substantially equal quality to complete a repair. Damage to interior or exterior surfaces, trim, upholstery, and other appearance items may occur at the factory during assembly, during delivery of the travel trailer to your selling dealer or on the selling dealer's lot. Normally, any damage is detected and corrected at the factory or by the selling dealer during the inspection process. If you discover any damage when you take delivery of your travel trailer, you MUST notify your dealer OR Airstream within 10 days of the date of purchase to have damage repaired at no cost to you. Minor adjustments, such as adjustments to the interior or exterior doors, drawers, and latches will be performed at no cost to you by your selling dealer during the first 90 days of warranty coverage; thereafter, such adjustments are your exclusive responsibility as normal maintenance.

WHAT IS NOT COVERED

1. Accessories and equipment that are working as designed, but which you are unhappy because of the design;
2. Structural elements, components or other similar items of the travel trailer that are not specifically included in the definition of Structural Components set forth above in this Limited Warranty.
3. Normal deterioration due to wear or exposure, including but not limited to floor coverings, rust, corrosion, oxidation, and cosmetic blemishes. In addition, this Limited Warranty does not apply to consumable parts that are designed to diminish over time, unless failure has occurred due to a defect in materials or workmanship;
4. Normal maintenance and service items, including but not limited to batteries, tires, axles, axle alignment, glass breakage, fuses, bulbs, lubricants, sealants and seals, door adjustments, awning tension. In addition, this Limited Warranty does not apply to consumable parts that are designed to diminish over time, unless failure has occurred due to a defect in materials or workmanship;
5. After-market equipment or accessories installed on the travel trailer after completion of manufacture by Airstream, or any defects or damage caused by such items;
6. Travel trailers not purchased through an authorized dealer of Airstream and travel trailers purchased directly or indirectly through auction, salvage, repossession, or other non-customary sale means.
7. Any travel trailer used other than for temporary recreation purposes, including, but not limited to, use of the travel trailer for residential, rental, business and commercial purposes, or any travel trailer purchased by, registered by, or titled in the name of a business association (such as any LLC, corporation, or partnership). If the travel trailer owner or user files a tax form claiming a business or commercial tax benefit or income related to the travel trailer, it shall be irrefutable that the travel trailer has been used for rental, commercial or business purposes.
8. Defects or damage caused by, in whole or in part, or in any way related to: Accidents, misuse (including off-road use), or negligence; Failure to comply with the instructions set forth in any owner's manual provided with the travel trailer; Alteration or modification of the travel trailer except such alterations or modifications approved in writing by Airstream; Acts of God or other environmental conditions, such as lightning, hail, salt causing rust, or other chemicals in the atmosphere; De-icing agents or other chemicals applied to the travel trailer; Failure to properly maintain or service the travel trailer, including but not limited to the maintenance of lubricants, sealants, and seals; Condensation and the results of condensation including water damage and the growth of mold or mildew (mold and mildew are natural growths given certain environmental conditions and are not covered by the terms of this Limited Warranty); The addition of weight to the travel trailer that causes the total weight to exceed applicable weight ratings, or addition of weight causing improper distribution of the weight of the travel trailer; Failure to seek and obtain repairs in a timely manner; Failure to use reasonable efforts to mitigate damage caused by defects; Failure to properly ventilate the travel trailer; Improper electric power supply or improper travel trailer hookup to other facilities; Acts or omissions of any person or entity other than Airstream.
9. Hardware or software of a third-party device that is connected to the travel trailer or its components, even if integrated or delivered with the travel trailer. Airstream is not responsible for the quality or accuracy of any information or service accessed through or from any third-party device or platform. Software distributed by Airstream inside or outside the travel trailer (including, but not limited to, system software and or applications) is not covered by this Limited Warranty. Airstream does not warrant that connections to, from or through the travel trailer will be uninterrupted or error-fee. Also, the user should back-up their data and information frequently. Airstream is not responsible for any loss or damage to data or information made available in connection with the use of the travel trailer. In addition, this Limited Warranty does not apply to: (a) to damage caused by use with another product or service; (b) to damage caused by a third party device or service (including upgrades and expansions), or (c) to obsolescence or lack of utility due to incompatibility with future versions of external hardware or software, including, but not limited to mobile devices.

OBTAINING WARRANTY SERVICE: In order to obtain warranty service under this Limited Warranty, the owner must do all of the following:

1. Owner and dealer representative must complete, sign, and return the Customer Performance Checkout within 10 days from delivery of the trailer;
2. Notify Airstream or one of its authorized, independent dealers, of any claimed defect within the warranty period or 10 days thereafter;
3. Provide notification of a defect within 10 days of discovery of that defect; and
4. Promptly return the travel trailer to an authorized Airstream dealer or Airstream for repairs.

If you believe a defect covered by this Limited Warranty still exists after an attempted repair by an authorized Airstream dealer, you must contact Airstream in one of the following manners, and specify:

1. The complete serial number of the travel trailer;
2. The date of original purchase and the date of original delivery;
3. The name of the selling dealer; and servicing dealer, if they are not the same.
4. The nature of the problem and the steps or service which have been performed.

Email: support@airstream.com • Phone: (937) 596-6111
Mail: AIRSTREAM, INC., 428 West Pike Street, P.O. Box 629, Jackson Center, Ohio 45334-0629, Attention: Owner Relations Department

Airstream may direct you to an authorized Airstream dealer or may request that you bring your trailer to the Airstream factory in Jackson Center, Ohio for repairs. Airstream does not control the scheduling of repairs at its authorized Airstream dealers, and repairs at the Airstream factory may not be immediately available. Therefore, you may encounter delays in scheduling repairs and/or completion of repairs. All costs associated with transporting the travel trailer for any warranty service shall be the sole responsibility of the owner.

EVENTS THAT DISCHARGE AIRSTREAM'S OBLIGATIONS UNDER THIS LIMITED WARRANTY: Misuse or neglect, accidents, unauthorized alteration, failure to provide reasonable and necessary maintenance (see Owner's Manual), damage caused by off road use, collision, fire, theft, vandalism, explosions, overloading in excess of rated capacities, and use of the travel trailer for commercial, business, or rental purposes shall discharge Airstream from any express or implied warranty obligation.

LEGAL REMEDIES: EXCLUSIVE JURISDICTION FOR DECIDING LEGAL DISPUTES RELATING TO THE ALLEGED BREACH OF EXPRESS WARRANTY AND BREACH OF IMPLIED WARRANTIES ARISING BY OPERATION OF LAW AS WELL AS THOSE RELATING TO REPRESENTATIONS OF ANY NATURE RESTS IN THE COURTS WITHIN THE STATE OF MANUFACTURE, WHICH IS OHIO. ALSO, THIS WARRANTY SHALL BE INTERPRETED AND CONSTRUED IN ACCORDANCE WITH THE LAWS OF THE STATE OF OHIO. ANY AND ALL CLAIMS, CONTROVERSIES, AND CAUSES OF ACTION ARISING OUT OF OR RELATING TO THIS WARRANTY, WHETHER SOUNDING CONTRACT, TORT OR STATUTE, SHALL BE GOVERNED BY THE LAWS OF THE STATE OF OHIO, INCLUDING ITS STATUTE OF LIMITATIONS, WITHOUT GIVING EFFECT TO ANY CONFLICT OF LAW RULE THAT WOULD RESULT IN THE APPLICATION OF THE LAWS OF A DIFFERENT JURISDICTION. IF STATE LAW GIVES YOU ADDITIONAL RIGHTS THAT CONFLICT WITH ANY TERM OF THIS WARRANTY, YOUR STATE LAW APPLIES OVER INCONSISTENT WARRANTY TERMS. For example, if you took delivery of your RV in California, the Song Beverly Warranty Act and Consumers Legal Remedies Act apply because they cannot be waived.

I AGREE THAT ANY AND ALL ACTIONS OF ANY KIND RELATED TO MY TRAVEL TRAILER SHALL BE DECIDED BY A JUDGE RATHER THAN BY A JURY. THIS JURY WAIVER MAY NOT APPLY TO YOU IF APPLICABLE OR PROVINCIAL LAW PROHIBITS A WAIVER OF A JURY TRIAL. For example, if you took delivery in California, your right to a jury cannot be waived.

CALIFORNIA CONSUMERS: To comply with California's Song Beverly Consumer Warranty Act pre-litigation notice requirements (described at California Code of Civil Procedure Section 871.24), written notice can be sent to Airstream, Inc., either by email sent to the following email address: support@airstream.com, or by certified or registered mail, return receipt requested, sent to the following address: Airstream, Inc., 428 West Pike Street, P.O. Box 629, Jackson Center, Ohio 45334-0629, Attention: Owner Relations Department.

CONSUMIDORES DE CALIFORNIA: Para cumplir con los requisitos de notificacion previa al litigio de la Ley de Garantia del Consumidor Song Beverly de California (descritos en la Sección 871.24 del Código de Procedimiento Civil de California), se puede enviar una notificación por escrito a Airstream, Inc., ya sea por correo electrónico a la siguiente dirección de correo electrónico: support@airstream.com, o por correo certificado o registrado, con acuse de recibo, enviado a la siguiente dirección: Airstream, Inc., 428 West Pike Street, P.O. Box 629, Jackson Center, Ohio 45334-0629, Attention: Owner Relations Department.

Before I purchased my travel trailer, I received, read, and agreed to the terms and conditions of this Limited Warranty. I understand and agree that the selling dealership is not an agent for Airstream but is an independent entity. I understand and acknowledge items of the WHAT IS NOT COVERED section of this Limited Warranty. I acknowledge and agree that, before purchasing my travel trailer, I inspected or was given an opportunity to inspect my travel trailer and disclosed in writing to the selling dealership all defects and damage that I discovered. For example, I inspected the underside of the RV for rust and did not discover any unless disclosed in writing to the selling dealership.

Purchaser Signature	Date	Purchaser Signature	Date

THIS WARRANTY GIVES YOU SPECIFIC LEGAL RIGHTS, AND YOU MAY ALSO HAVE OTHER RIGHTS WHICH VARY FROM STATE TO STATE.
AIRSTREAM, INC • 1001 West Pike Street • Jackson Center, Ohio 45334-0629 • Phone: 937-596-6111 • FAX: 937-596-6539

Service

Coach-Net® Roadside Assistance

Every new Airstream comes with a three-year, transferable subscription to Coach-Net which includes a long list of premium services to help quickly solve issues or learn about your Airstream.

To learn more, scan the QR code above, navigate to https://www.airstream.com/owners/coach-net/, or call Coach-Net at 855-817-1885. On-call technicians are always ready to answer questions.

Service Centers

Before leaving the factory, every vital part of the trailer is tested for performance. Each test is signed and certified by an inspector. After the trailer arrives on your dealer's lot, all vital parts and systems are again tested. When you take delivery of your new trailer, you will receive a complete check out.

At that time, a specified list of performance checks on your trailer equipment will be conducted, and any deficiencies you have experienced since taking delivery will be corrected.

Please contact your dealer if your trailer needs service. Major service under your Airstream Limited Warranty is available through our nationwide network of Airstream Dealer Service Centers. To find a dealer, please visit, www.Airstream.com to use our dealer locator.

Occasionally, dealerships change, or new dealers are added that may not appear on the website immediately. Please note that all centers operate on an appointment basis for the utmost efficiency.

When you require service for your trailer from the Airstream Factory Service Center or a Certified Dealer Service Center, please contact the service manager for an appointment, and inform them if you are unable to keep the appointment date or wish to change it. Service may be arranged at the Factory Service Center by contacting the Service Coordinator at:

Airstream Factory Service Center,

428 West Pike Street

P.O. Box 629

Jackson Center, Ohio 45334-0629

Phone: (937) 596-6111 or (877) 596-6111

Reporting Safety Defects

If you believe that your vehicle has a defect which could cause a crash or could cause injury or death, you should immediately inform the National Highway Traffic Safety Administration (NHTSA), in addition to notifying Airstream Inc.

If NHTSA receives similar complaints, it may open an investigation, and if it finds that a safety defect exists in a group of vehicles, it may order a recall and remedy campaign. However, NHTSA cannot become involved in individual problems between you, your dealer, or Airstream Inc.

To contact NHTSA, you may either call the Vehicle Safety Hotline toll-free at 1-888-327-4236 (TTY: 1-800-424-9153), go to www.safercar.gov, or write to:

Administrator,

NHTSA,

1200 New Jersey Avenue, S.E.,

Washington, DC 20590.

You can also obtain other information about motor vehicle safety from www.safercar.gov.

Camping

Suggested Pre-Travel Check List

Interior

1. Turn off water pump switch.
2. Close windows and vents.
3. Lock all interior cabinet doors.
4. Latch refrigerator door. (Seal containers first.)
5. Hold down or securely stack all loose, hard, and sharp objects.
6. Fasten sliding and foldette doors.
7. Drain toilet bowl.
8. Turn off interior lights.
9. Lower wall mounted tables to be even with dinette seats. Place Pedestal tables in upright position.
10. Lower blinds.

Exterior

1. Secure and lock main door handle and deadbolt.
2. Pull up or retract step.
3. Disconnect and stow the electrical hookup cord, the sewer (flush out), and water hookup hoses.
4. Turn off gas at LP tanks.
5. Retract stabilizing jacks.
6. Check hitch for proper attachment.
7. Check safety chains and breakaway switch cable.
8. Fully retract hitch jack. Remove and stow jack stand or wood block.
9. Check clearance and stoplights.
10. Check lug nuts.
11. Check tires for correct pressure.
12. Adjust tow vehicle mirrors.
13. Pull forward about 50 ft, test brakes, and check site for forgotten objects and cleanliness.

Trailer Equipment and Accessories

1. Water hose, 5/8-in. high-pressure, tasteless, odorless, non-toxic, (2 25-ft. sections)
2. Y connection - water hose.
3. Sewer hose with clamp.
4. Drain cap with hose drain.
5. Holding tank cleaner and deodorizer.
6. Power cord adapter, 30-amp capacity.
7. 30-ft. electric cord, 30-amp capacity.

   30-ft. electric cord, 50-amp capacity.
8. Woodblocks for leveling.
9. Wheel chocks.
10. Hydraulic jacks.
11. Cross-type lug wrench and a torque wrench.
12. Quality tire gauge.
13. Emergency road warning triangle.

Motoring Essentials

1. Display the tow vehicle and trailer registration properly.
2. Carry driver's license.
3. In Canada, bring along a non-residence liability insurance card and your passport.
4. In Mexico, you must have special auto insurance.
5. Carry an extra set of the ignition and truck keys in a separate pocket, or in your wallet.
6. Keep an operating flashlight with fresh batteries in the glove compartment.
7. Pack the trunk so that you can reach the tools and spare tire without completely unpacking.
8. Keep sharp or hard articles securely packed.
9. Carry a first-aid kit.
10. Carry your pet's dish, food, leash, and health and registration papers.

Overnight Stop

Airstream owners have parked virtually in every place imaginable, from filling stations to farmlands. In time, you'll develop a knack for spying wonderful little roadside locations by turning off the main highway and exploring.

There are many modern parks, including State, County, and Federal parks, with good facilities where you might obtain hookups of electrical, water, and sewer connections. Directories are published which describe in detail these parks and tell what is available in the way of services and hookups.

On overnight or weekend trips, chances are you will not use up the capacity of the sewage holding tank, deplete the water supply, or run down the batteries that supply the 12-volt current.

On a longer trip, when you have stayed where sewer connections and utility hookups were not available, it will be necessary for you to stop from time to time to dispose of the waste in the holding tank and replenish the water supply. Many truck stops and gas stations, chain and individually owned, have installed sanitary dumping stations for just this purpose. Booklets are available that list these dumping stations.

When stopping for the night, your Airstream is built to be safely parked in any spot that is relatively level and where the ground is firm. Your facilities are with you. You are self-contained. Unless the tow vehicle is needed for transportation, it is not necessary to unhitch.

⚠ DANGER

At each campsite, make sure you have not parked in such a manner as to block the operation of the escape window by being too close to trees, fences, or other impediments. Scenic views are one reason for traveling, but don't park so the beautiful lake or steep cliff is just outside your escape window.

Choose the most level parking spot possible. Stabilizing jacks or blocks may not be required for an overnight stay. However, if you put the jack pad on the hitch jack and run the hitch jack down to take the weight off the tow vehicle's springs, it will provide some stability. If you must park on a slope, park facing downhill. It is easier to level the trailer this way.

Before moving on, check your campsite, both for cleanliness, and to be sure you have not left anything behind. Turn off the gas supply and make sure everything is properly stowed. Use your pre-travel check list and you are ready for more travel adventure.

Extended Stay

Making a long trip in your Airstream is not very different from making a weekend excursion. Since everything you need is right at hand, you are at home wherever you go. When packing for an extended trip, take everything you need, but only what you need.

When you plan to stay in the same place for several days, weeks or months, you will want your trailer to be as level and steady as possible. Check the attitude with a small spirit level set on the inside work counter or the trailer hitch A-frame. If a correction is necessary, you must level from side to side first. This can be done easily by backing the trailer up onto one or more 2 x 6 boards. We do not recommend placing tires in a hole for leveling.

Leveling

Block or chock the wheels to keep the trailer from rolling. Level from front to rear by disconnecting the hitch from the tow vehicle, putting the jack pad under the hitch jack, and adjusting the jack up or down until the trailer is level. Use stabilizing jacks at all four corners, as shown in the diagram, to eliminate the natural spring action of the axles.

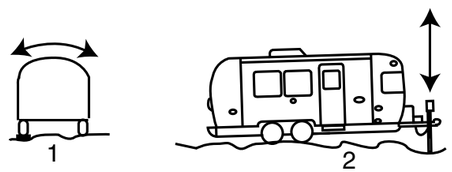

1. Side to Side
2. Front to Rear

Stabilizing Jacks

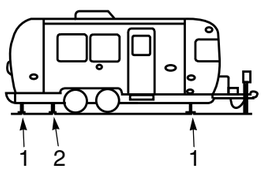

1. Stabilizing Jack Location
2. Lifting Jack Location

⚠ WARNING

Stabilizing jacks should only be used to stabilize trailer. Do not use jacks to lift the trailer.

⚠ WARNING

Whenever the trailer must be lifted with a jack, as when changing a tire, always place the lifting jack under the main frame rail. A label is provided to indicate the proper position for the jack. Never use stabilizing jacks to lift the trailer.

For more information on jacking, see Tire Changing on page 8-3.

Effects Of Prolonged Occupancy

Your trailer was designed primarily for recreational use and short-term occupancy. If you expect to occupy the trailer for an extended period, be prepared to deal with condensation and the humid conditions that may be encountered.

Moisture can condense on the inside surfaces of the trailer during cold weather when relative humidity of the interior air is high. This condition is increased because the insulated walls of a recreation vehicle are much thinner than house walls. Also, the relatively small volume and tight, compact construction of modern recreational vehicles means the normal living activities of even a few occupants will lead to rapid moisture saturation. Estimates indicate a family of four can vaporize up to three gallons of water daily through breathing, cooking, bathing, and washing. Unless the water vapor is carried outside by ventilation or condensed by a dehumidifier, it will condense on the inside of the windows and walls as moisture, or in cold weather, as frost or ice. It may also condense out of sight, within the walls or the ceiling, where it will manifest itself as warped or stained panels.

Appearance of these conditions may indicate a serious problem. When you recognize the signs of excessive moisture and condensation in the trailer, action should be taken to minimize their effects.

Tips To Control Condensation

Allow excess moisture to escape to the outside when:

- Bathing, washing dishes, hair drying, etc.
- Laundering, using appliances, and using non-vented gas burners.
- Cooking (Always use the stove vent hood).

Avoid dead air spaces by:

- Using a fan to keep air circulating.
- Leaving closet and cabinet doors partially open.

To help alleviate cold weather condensation:

- Keep the temperature as reasonably cool during cold weather as possible.
- Allow your trailer to breathe; do not make it airtight.
- Allow some warm air to be removed and some cool outside air in.
- Do not allow the furnace to recycle humid interior air; provide reasonable ventilation.

In hot weather, starting the air conditioner early will help remove excess humidity from the air while lowering temperatures.

NOTICE

Your trailer is not designed, nor intended, for permanent housing. Use of this product for long-term or permanent occupancy may lead to premature deterioration of structure, interior finishes, fabrics, carpeting, and drapes. Damage or deterioration due to long-term occupancy may not be considered normal, and may, under the terms of the warranty, constitute misuse, abuse, or neglect, and may therefore reduce the warranty protection.

Molds

Molds are microscopic organisms that naturally occur in virtually every environment, indoors and out. Outdoors, mold growth is important in the decomposition of plants. Indoors, mold growth is unfavorable. Left unchecked, molds break down natural materials such as wood products and fabrics. Protect your investment by understanding the potential risks mold imposes.

Contributing Factors To Mold Growth

For mold growth to occur, temperatures, indoor or outdoors, must be between 40° and 100°F, and must also have a source of moisture, such as humidity, standing water, damp materials, etc. Indoors, the most rapid growth occurs with warm and humid conditions.

Inhibiting Mold Growth

By controlling relative humidity, the growth of mold and mildew can be inhibited. In warm climates, use of the air conditioner will reduce the relative humidity. Vents are located in the bathing and cooking areas. Constant use of these vents is advised during food preparation and bathing, even during colder weather. Additionally, opening a window during these activities will assist in ventilation. In extremely humid conditions, the use of a dehumidifier can be helpful.

Frequent use of your trailer or cleaning regularly are important preventive measures. Additionally, any spills should be wiped up quickly and dried as soon as possible. Avoid leaving damp items lying about. On safe surfaces, use mold-or mildew-killing cleaning products. Check sealants regularly, and reseal when necessary to avoid water leaks. Proper preventive maintenance to the trailer and its accessories, as described both in this manual and in accompanying literature, will provide the best protection to the trailer.

For more information concerning controlling moisture in the trailer, see Tips To Control Condensation on page 3-9.

NOTICE

If using a dehumidifier, please read and follow all manufacturer instructions and recommendations for the use and cleaning of the dehumidifier.

Winter Traveling

Traveling in sub-freezing temperatures will require certain precautions to protect the plumbing system and your personal belongings from being damaged by freezing.

Whenever possible, the heat should be kept set to a constant temperature. It is easier for the furnace to keep a constant room temperature than allow the trailer temperature to drop to 50°F, and then attempt to raise it to room temperature.

Some states do not allow LPG to be turned on while moving. While traveling in these states, simply use your common sense. How cold is it? How long will it be before you can turn the heat back on? Is the temperature dropping or rising? Remember, when towing at 50 MPH, the wind chill factor will cause the interior of the trailer to cool much faster than a trailer that is parked.

1. When parked in sub-freezing temperatures, make sure to keep a full supply of LPG and plug into an external AC power source whenever possible.
2. If your stay is longer than overnight, you should try to have 120-volt electricity available. Minimize the use of electricity if a 120-volt power source is not available.
3. Leave cabinet doors, wardrobes, and bed doors partially open to allow warm air to circulate around plumbing lines and fixtures. Insulate and/or wrap your exterior water lines with heat tape.

NOTICE

Drain and winterize all models if the water systems are not being used during winter traveling; see Winterizing and Storage on page 8-14.

AIRSTREAM®

Section 4
FLOOR PLANS AND SPECIFICATIONS

FLOOR PLANS 4-2
- 25FB Globetrotter 4-2
- 27FB Globetrotter 4-2
- 30RB Globetrotter 4-2

SPECIFICATIONS 4-3
- Specification Chart 4-3
- Specification Tags 4-4
- Measuring Hitch Ball Height 4-4

Floor Plans

25FB Globetrotter

27FB Globetrotter

30RB Globetrotter

Specifications

Specification Chart

NOTE

All product information and specifications listed are as accurate as possible at the time of printing. Since we continually strive to improve our products, all specifications are subject to change without notice. All capacities are approximate and dimensions are nominal and are checked and updated throughout the model year.

Item	Model		
	25FB	27FB	30RB
Exterior length	26' 2"	28' 2"	31' 2"
Exterior width	8' 5.5"	8' 5.5"	8' 5.5"
Exterior height with A/C	9' 7"	9' 7"	9' 7"
Interior width	8' 1"	8' 1"	8' 1"
Interior height with A/C	6' 7"	6' 7"	6' 7"
Hitch ball height	19"	19"	19"
Hitch ball size	2 5/16"	2 5/16"	2 5/16"
UBW (lbs. with LP & batteries)	5975	6300	6925
Hitch weight (lbs. with LP & batteries)	880	875	950
GVWR (lbs.)	7300	7600	8800
NCC (lbs.)	1325	1300	1875
Fresh water tank (gal.)	39	39	53
Gray water tank (gal.)	39	39	36
Waste water tank (gal.)	39	39	36
Lug nut torque (Max), aluminum wheels (ft lbs.)	110	110	110
Lug nut torque (Max), steel wheel (spare) (ft lbs.)	100	100	100
Tire size	ST225/75R15		
Tire Max cold* inflation pressure (psi)	80		
Tire Max load rating (lbs.)	2830		

*The term *cold* refers to how long a tire has sat idle. *Max cold inflation pressure* should be checked in the morning (after sitting idle for at least three hours) before driving more than a few miles, or before rising ambient temperatures and the sun's radiant heat can affect tire pressure.

The UBW and NCC weights listed in the Specification Chart are for the base unit with LP and batteries included (based on factory lithium battery installation). Heavier battery types will reduce the available carrying capacity. Always verify actual weight before towing.

Gross Vehicular Weight Rating (GVWR) is the maximum permissible weight of this trailer when fully loaded. It includes all weight at the trailer axle(s) and coupler.

Unit Base Weight (UBW) is the dry weight of the base unit without options.

Net Carrying Capacity (NCC) is equal to GVWR minus UBW. Gross Axle Weight Rating (GAWR) is the value specified as the load carrying capacity of a single axle system, as measured at the tire-ground interfaces.

RECREATIONAL VEHICLE TRAILER CARGO CARRYING CAPACITY
VIN ################
THE WEIGHT OF CARGO SHOULD NEVER EXCEED
XXX kg or XXX lbs
CAUTION
A full load of water equals XXX kg or XXX lbs of cargo @ 1 kg/L (8.3 lb/gal)

Specification Tags

For precise cargo capacity, refer to the Cargo-Carrying Capacity tag on the inside of the screen door. The **WEIGHT OF CARGO SHOULD NEVER EXCEED** numbers shown on the tag, which is the maximum weight of cargo you can load and carry in your specific trailer as built with its options.

Located on the front roadside of your trailer are the Tire and Loading, and Vehicle Manufacturing tags.

The Tire and Loading information tag lists the Size and Cold Inflation Pressure of the tires on your vehicle, the weight of your trailer as manufactured, and the GVWR.

The Vehicle Manufacturing tag lists the Size of tires and wheel rims, Maximum Cold Inflation pressures, the Vehicle Identification Number (VIN), and GAWR.

Measuring Hitch Ball Height

The proper height will vary according to the weight you carry and the tires you use. However, checking the height on your trailer is relatively easy:

1. With trailer parked on fairly level ground, measure from ground to bottom of frame, front and rear.
2. Adjust front jack until measurements are equal.
3. Now, measure from ground to the inside top of ball coupler. This figure is the hitch height. The hitch ball is then usually set 1/2 to 1 in. higher, according to the spring rate of your tow vehicle, to allow for it to settle when the trailer is hitched up.

AIRSTREAM®

Section 5
INTERIOR

INTERIOR FEATURES AND CARE 5-3
Lighting 5-3
Interior Aluminum Skin 5-3
Curtains. 5-3
Luxury Woven Vinyl Floor 5-4
Floor Care 5-4
Interior Doormat and Rug Selection . . . 5-4
Sink and Faucet Care 5-4
Shower Stall 5-5
Furniture and Upholstery 5-5
Hardwood Care 5-5
Counter Area 5-5
Upholstery Care 5-5
Bed 5-6
Storage 5-6
PLUMBING 5-7
Fresh Water System (Self-Contained) 5-7
Fresh Water Lines and Tanks 5-7
Water Pump 5-7
Drain and Waste System 5-8
Toilet 5-9
Things Not to Put into the Toilet or Drains . 5-9
Deodorizers and Biological Chemicals . . 5-9
Monitor Panel 5-9
Viewing Tank Levels 5-9
Viewing Battery Voltage 5-9
ELECTRICAL SYSTEM OVERVIEW 5-10
120-Volt AC System 5-10
Shore or Generator Power 5-10
Inverter Function 5-10
120V AC Outlets/Receptacles 5-10
12-Volt DC System 5-11
Battery Power 5-11
Converter / Charger Function 5-11
Power Center 5-12
Circuit Breaker Protection 5-12
Ground Fault Circuit Interrupter (GFCI) . .5-13
GFCI Breaker Test 5-13
Fuse Protection 5-13
ELECTRICAL SYSTEM OPERATION. 5-14
Battery Power Disconnect Switch 5-14
Inverter 5-14
Batteries 5-15
Factory Installed Lithium Batteries (Optional) .5-15
Battery Management System (BMS) . . .5-15
High Voltage Disconnect 5-15
Low-Voltage Disconnect 5-16
Battery Heaters/Cold Weather Usage . .5-16
Dealer Installed Batteries 5-16
Battery Monitoring and Charging 5-17
Battery Monitoring - with SmartShunt. . .5-17
Battery Monitoring - Dealer Installed Batteries 5-17
Shoreline Connection Charging 5-17
Tow Vehicle-Supplied Charging 5-17
Solar Power Charging 5-18

Section 5
Interior

ENTERTAINMENT SYSTEMS 5-19
TV and Sound System 5-19
Blu-ray/DVD Player and Streaming Device Connection 5-19
TV and Audio Component Pairing 5-19
Smartphone and Stereo Pairing 5-19
Cable/Satellite Connection 5-19
TV/Radio Antenna 5-19
Ethernet Connection 5-19
APPLIANCES 5-20
Appliance Manufacturer's Manuals 5-20
Maintenance 5-20
Air Conditioner 5-20
Air Conditioner Filters 5-20
Ducted Roof System 5-21
Furnace 5-21
Thermostat 5-21
Ceiling Vent Fan 5-22
Thermostat and Rain Sensor 5-22
Cleaning Instructions 5-22
Exhaust Vent 5-23
Operation 5-23
Cleaning Instructions 5-23
Fuse 5-23
Water Heater 5-24
Startup 5-24
Recirculation Feature 5-24
Common Issues 5-24
Refrigerators 5-25
Cooktop 5-25
Microwave Ovens 5-25

Interior Features and Care

The interior of every Airstream is crafted with features that offer comfort, convenience, functionality, durability, and design appeal. Our goal in this section is to deliver the best experience possible by providing you with the knowledge you need to enjoy these features and care for them to ensure their longevity.

The Airstream Supply Company is your trusted source to obtain care products and supplies to help maintain and enjoy your Airstream. Scan this QR code to visit and explore our recommended assortment of care products and much more at airstreamsupplycompany.com.

Many of the appliances and components installed in your Airstream come with manuals from the manufacturers that produced them. These manuals provide detailed instructions and critical safety alerts that should be read and followed before operating them. If any manual(s) have not been provided in your owner's packet, contact your dealer, appliance or component manufacturer, or Airstream Customer Service at 937-596-6111 or email: support@airstream.com

⚠ WARNING

Do not smoke when drowsy. If a cigarette or any burning ash falls onto furniture, remove it immediately. Even a small ember can ignite upholstered furniture and start a fire.

Lighting

The main ceiling lights can be turned on/off or dimmed by the switch at the entry door. Some light fixtures may have a push button switch located on the fixture. The bed and lounge areas have individually switched directional lighting. If an LED light is not functioning and no electrical issue is present, the fixture may need to be replaced.

Interior Aluminum Skin

The interior aluminum skin can be cleaned using any mild, non-abrasive soap or detergent. After washing, rinse thoroughly with clean water to remove any residue. Drying the surface with a soft cloth or chamois can help prevent spots and streaks.

Airstream recommends using an all-purpose Pledge® cleaner on interior surfaces, including the aluminum skin, as it is an effective way to remove fingerprints and smudges.

NOTICE

When washing or polishing your trailer, always wipe with the grain of the metal.

Curtains

The curtains are on a track. Undo the velcro at the seams to slide them open. Airstream recommends dry cleaning only for the curtains. To remove them, remove the top screw from the endcap of the curtain track, pull the endcap off, and slide the curtains off.

NOTICE

All drapery materials and mattress covers must be professionally dry-cleaned.

Luxury Woven Vinyl Floor

Floor Care

One of the best ways to keep the floor looking good is to wipe fabrics off on a weekly basis with clean water. This helps prevent dirt from becoming deeply embedded in the fabric and eliminates the need for more vigorous cleaning. For general or light cleaning, brush off loose dirt and wipe down the floor. Prepare a solution of water and mild soap such as dish washing liquid or household cleaner. Using a soft bristle brush to clean, apply a small amount of water and soap mixture to the stain. Rinse thoroughly until all soap residue is removed. Allow the floor to air dry.

For more stubborn stains and mildew, prepare a solution of 1 cup bleach and 1/4 cup mild soap per gallon of water. Apply a small amount of bleach and soap mixture to the stain and blot with a sponge or clean towel. Rinse thoroughly to remove all soap residue. Allow to air dry. A citrus based cleaner like D-Limonene can be used for tough dirt and grease spots. Ammonium based products are NOT recommended. All cleaning products need to be rinsed off thoroughly and air dried after cleaning.

NOTICE

Remember to protect the area around your flooring if using a bleach solution. Other fabrics may have an adverse reaction to cleaners containing bleach.

NOTICE

The use of certain cleaning agents, including but not limited to powdered abrasives, solvents, and industrial strength cleaners is not recommended. Always follow the manufacturer's instructions. Check that the cleaner/polish is suitable for use with cushioned vinyl floor coverings.

Interior Doormat and Rug Selection

To avoid staining or discoloration of vinyl flooring, only use doormats or rugs made of natural fibers. The rubber-backed mat provided by Airstream is suitable for outdoor use only.

NOTICE

Rubber or latex-backed mats or furniture with rubber feet may stain or discolor vinyl flooring.

Sink and Faucet Care

To clean sinks and faucets, dampen a soft cloth with warm water and a small amount of mild liquid soap or detergent. Gently wipe down all surfaces, then rinse with clean water and dry with a soft cloth. Avoid abrasive scrubbing sponges, steel wool, scouring powders, and harsh chemical cleaners, as these can damage or dull the protective finishes on sinks and faucets. Using gentle cleaning methods helps preserve the appearance and integrity of the materials. For best results, wipe down sinks and faucets after each use to prevent water spots, soap residue, and grime from accumulating.

Avoid leaving cookware in the sink, especially metal like cast iron, as it can cause stains and scratches. Depending on the sink and faucet manufacturer, additional care instructions may be included in your owner's packet.

Shower Stall

Interior Surface Care: Wet the shower surface and clean it using a non-abrasive sponge or soft cloth and a non-abrasive liquid detergent cleaner safe for acrylic, gel coat, and fiberglass bath surfaces. Avoid using acidic or harsh commercial bath cleaners. Rinse and dry with a soft towel. A wax or sealer suitable for these surfaces can be applied to the stall to restore gloss to dull areas when necessary, but should not be used on the shower floor as this could create an unsafe, slippery surface.

⚠ WARNING

Applying wax to the shower floor is not recommended and could create an unsafe, slippery surface.

Showerhead: The showerhead facilitates water-saving when camping without a fresh water hookup. To conserve water while showering with fresh tank water, turn the water off between lathering and rinsing. For showerhead and hardware care, see Sink and Faucet Care in this section.

Retractable Clothesline: A retractable clothesline is installed for your convenience in the shower stall. To use, pull the line from the base and attach it to the holder on the opposite wall. Turning the nut on the base will tighten the line.

Furniture and Upholstery

Hardwood Care

To maintain the appearance and longevity of the hardwood surfaces, use only soft microfiber cleaning towels or electrostatic microfiber dusters. Avoid rough or abrasive scrubbing materials. Use a high-quality furniture cleaner that does not contain ammonia or bleach. One good choice is Murphy® Oil Soap Clean & Shine.

Counter Area

The galley counter tops are made of a solid surface and can be cleaned with common household cleaners. For most residues you can clean your counter tops with warm soapy water, ammonia-based household cleaners, or a dedicated counter top cleaner, like Clean EnCounters®. Avoid window cleaners, however, as they leave a waxy build up that dulls the surface. For the toughest problems, use Deep Cleaner from Stone Care International. A mix of 1Tbsp bleach:1 gallon of water can be used to occasionally disinfect the surface.

The bathroom counter tops are made of a high-pressure laminate and can be cleaned with soap and water, or you can use a common solvent on tough spots. Do not use abrasive cleaners since they could scratch the surface.

Upholstery Care

The vinyl upholstery in your Airstream has a PermaBlok3® vinyl protective coating that's engineered to create a tough, effective barrier against the three biggest problems: germs, abrasion, and stains. You can not see it or feel it, yet the protection it offers results in extended performance and lasting beauty with minimum care. Most stains can be remove with a damp cloth and cleaned with a 1:1 mix of Ivory® soap and water. A 1:1 mix of ammonia and water, or a 1:4 mix of bleach and water can be used for more stubborn stains. Only if needed a 1:1 mix of isopropyl alcohol and water can be used. Use only a soft cotton cloth and rub the stain in a circular motion. Rinse thoroughly with clean water and pat dry.

NOTICE

Never remove cushion covers for separate dry cleaning or washing. Any tumble cleaning method can destroy the backing, and/or shrink or otherwise damage upholstery fabric.

Bed

The Airstream Supply Company is your trusted source for custom bedding options. Scan this QR code to visit airstreamsupplycompany.com to obtain items like custom-fit sheets, mattress pads, encasements, memory foam toppers, and even custom-fit replacement mattresses, made to order to your preferred level of firmness, support, and comfort.

Dinette Table and Bed Conversion, 25FB/27FB

The tabletop is horizontally adjustable for comfort and functionality. Locate the tabletop slide latch on the underside and pull it outward to remove tension. Slide the tabletop side-to-side, in or out, to the desired position. Reengage the latch before using the table. Use the following steps to set up the various dinette and bed layouts.

1. Locate the tabletop slide latch on the underside and pull it outward to remove tension. This allows the top to be centered between the dinette seats as it is lowered.
2. Pull and hold the lever for the pedestal. Push on the top to get it moving downward. Release the lever and continue pushing down, centering the table as you lower it. You will hear a click when the table is fully lowered and latched into position.
3. Reengage the tabletop slide latch and lay the dinette seat backrest cushions over the tabletop to complete the conversion.

To resume using the dinette, remove the cushions and pull the pedestal lever to raise the table (pulling up on the table as necessary).

The 25FB and 27FB have a sofa bed pullout for additional sleeping capacity. To use it, pull out the sofa bed and place the additional stored cushions on the platform.

Dinette Table and Bed Conversion, 30RB

Use the following steps to set up the various dinette and bed layouts.

Dinette:

1. Pull the round center covers off each floor base.
2. Find the T-bolts on the bottom of each leg and turn them counterclockwise until extended.
3. Align and insert the T-bolts into the rectangular openings in each floor base. Twist the legs clockwise and tighten until snug.
4. Align the tabletop sockets with the legs and push down on the top until it is seated on the legs.

To convert the 30RB dinette to bed lift the tabletop up and off the legs. Remove the dinette legs and store them. Replace them with the shorter bed legs found in the wardrobe using steps 2-4 above. Lay the provided cushions across the tabletop to complete the conversion.

The 30RB also has a sofa bed pullout for additional sleeping capacity. To use it, pull out the sofa bed and place the additional stored cushions on the platform.

Storage

Galley cabinets should have the heaviest items stored on the bottom and lighter items overhead. After loading, put skillets and canned goods on the floor or bottom shelf, and cereals and crackers in the overhead roof locker. Use unbreakable-type plates and saucers, and consider storing your dish towels around them.

Clothes hung in wardrobes should be kept on hangers that snap over the clothes rods to keep them from bouncing off on rough roads. Try to avoid large bulky coats. Layers of lighter clothing will usually keep you warmer, are more versatile, and are easier to store.

⚠ WARNING

Keep flammable material away from the furnace and vents.

Plumbing

Fresh Water System (Self-Contained)

When filling the water tank in your Airstream, always use potable water that is safe for drinking to reduce the risk of ingesting harmful bacteria and to prevent contamination of the fresh water system. For instructions on filling the tank, see Gravity Water Fill on page 6-6. For instructions on how to use the city water hookup, see City Water Hookup on page 6-6.

Fresh Water Lines and Tanks

To maintain the quality and integrity of your Airstream's fresh water system, periodic sanitization is recommended; see Sanitizing on page 8-11

If your Airstream will be stored or towed in freezing temperatures, the fresh water system must be properly winterized to prevent damage. For detailed steps, see Winterizing and Storage on page 8-14. If you are planning to use the fresh water system in freezing temperatures, see Water Heater on page 5-24.

The fresh water tank and water lines are equipped with drains to assist with maintenance and seasonal preparation. For more information, see Fresh Water Tank Draining on page 8-11.

Water Pump

The switch for the water pump is located on the monitor panel; see Monitor Panel on page 5-9. When turned on, the water pump's controller maintains a consistent regulated water pressure and steady water flow based on demand.

The water pump is typically left off when hooked up to a city water supply. However, if city water pressure is lower than desired the water pump can be turned on to facilitate increased water pressure, provided there is a supply of water in the fresh water tank. The tank will be depleted by the amount needed to supplement the flow of city water.

Access to the water pump will be necessary for periodic cleaning of the strainer screen; see Water Pump Access Locations on page 8-10 *and* see Strainer Cleaning on page 8-10.

NOTICE

Road vibration may force a faucet open in transit. Ensure the pump is OFF prior to travel.

NOTE

If water flow is interrupted, check the water supply and turn the pump off and back on.

Drain and Waste System

25FB Model

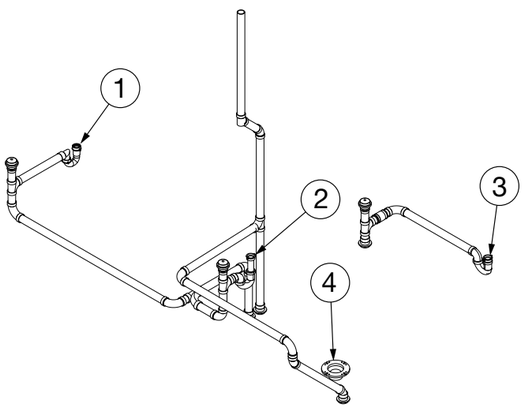

1. Galley Drain
2. Lavatory Drain
3. Shower Drain
4. Toilet Drain

27FB Model

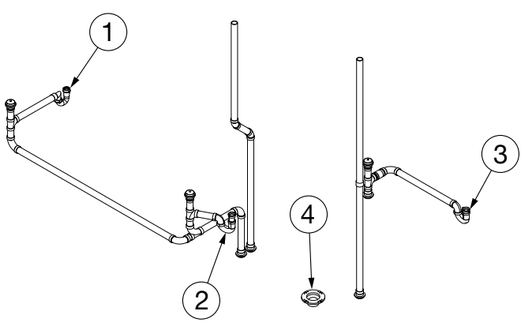

1. Galley Drain
2. Lavatory Drain
3. Shower Drain
4. Toilet Drain

30RB Model

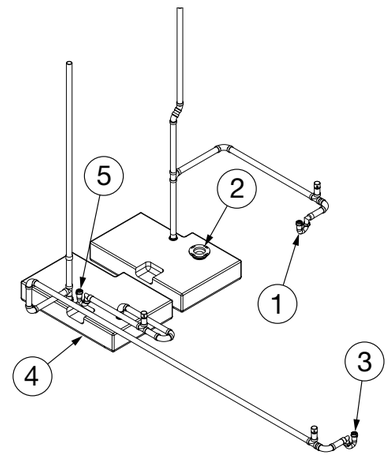

1. Galley Drain
2. Lavatory Drain
3. Shower Drain
4. Toilet Drain

The Drain and Waste System consists of the sink and shower drains (depicted above), toilet, holding tanks, and holding tank dump valves. The toilet drains into the waste water holding tank, while all other drainage empties into the gray water tank. Both tanks drain through a common outlet, so only one sewer hose connection is needed at a dump station; see Emptying the Holding Tanks on page 8-12 also, see Deodorizers and Biological Chemicals on page 5-9 for tank preparation.

Check the monitor panel regularly. If the waste water holding tank becomes full, the toilet bowl cannot be emptied. If the gray water tank overfills, drain water may back up and overflow; see Monitor Panel on page 5-9.

⚠ CAUTION

Failure to monitor holding tank levels could result in unsanitary overflow.

Toilet

The toilet features a single pedal that opens and closes the slide mechanism and water valve.

Pressing the pedal flushes waste and sprays water down the side of the bowl. Water will continue to flow briefly after releasing the pedal. To conserve water (if equipped), hold the hand-sprayer over the bowl and press its thumb lever while pressing the pedal. This directs all the water through the hand-sprayer. For additional instructions, please refer the toilet manufacturer's manual.

NOTICE

Never put wet strength paper towels or tissues in the toilet since they won't dissolve and can catch in the mechanism. Patterned toilet tissue is slower to dissolve than plain. Most RV stores offer tissue designed for RVs that will completely dissolve and work well with any system.

NOTICE

When you dump the bowl of the toilet, make sure all paper and solids have cleared the slide mechanism before you allow it to close. Failure to do so can cause the groove for the slide to become jammed and the slide will no longer close completely.

Things Not to Put into the Toilet or Drains

- Facial tissues and feminine hygiene products (they do not dissolve like toilet paper).
- Automotive antifreeze, ammonia, alcohols, or acetone.
- Table scraps or other solids that may clog the drains.

Deodorizers and Biological Chemicals

A variety of deodorizers and tank treatment chemicals are available in tablet, liquid, and powder form. These products help control odors and promote bacterial activity to break down waste and toilet paper in the waste water tank. Always follow the manufacturer's directions and add the treatment through the toilet before use. It's also important to add a few gallons of water by filling the bowl and pressing the foot pedal several times. For more information, see Extended Stays on page 8-13.

Monitor Panel

Tank levels are monitored by sender pads mounted on the sides of each tank. Data from each sender pad is transmitted to the Monitor Panel display through a single two-conductor wire.

When a button for a particular tank is pressed, the display powers up to show the current level. The display also indicates the battery voltage when the BATT button is pushed.

Viewing Tank Levels

Press and release the button corresponding to the tank to be checked, and the display will show the levels in percent on the LED display. If no other button is pressed, then the display shuts off after about 5 seconds.

If another button (including BATT) is pressed before the 5-second time is up for the first button, the display will immediately switch to show the new level or voltage. The 5-second time-out is restarted every time a button is pressed.

To continuously display a reading, press and release the desired button, then press the same button again. The display will be on hold mode when the button is released, indicated by the decimal point on the right-hand side. While the display is in hold mode, it will recheck the level once per second so the user can watch the level change while the tank is filled or drained. The display will automatically shut off after 5 minutes in hold mode. To end the hold mode before the 5 minutes is up, press any tank button, and the display will shut off. By pushing two buttons at once, the diagnostic functions can be accessed.

Viewing Battery Voltage

Press the BATT button and release it; the display will show the battery voltage on the LED display. The display will shut down after about 5 seconds if no other button is pressed.

If the BATT button is held down, the display continuously rechecks the voltage and shows the updated value. The reading may flicker back and forth between two values.

If another button is pressed before the 5-second time is up for the BATT button, the display will immediately switch to show the value for the new button. The 5-second time-out is restarted every time a button is pressed. There is no hold mode for the battery voltage.

Electrical System Overview

The electrical system in your Airstream consists of two primary power sources: a 120-volt AC (alternating current) system and a 12-volt DC (direct current) system.

While each system serves a distinct role, components like the inverter and converter serve as bridges between them, converting power from one form to another as needed. This integration ensures the electrical system functions smoothly, whether you're plugged in or relying on battery power.

The information that follows explains these systems, their components, and how they operate.

120-Volt AC System

The term 120-Volt AC (120V AC) refers to the type of electrical service your trailer receives when connected to an external power source such as a campground pedestal, residential outlet, or generator. This is the same type of power supplied by standard household outlets in a typical home.

When external power is not available, some 120V AC power can be supplied by the inverter, which converts DC power from the batteries into 120V AC, although this power is limited, as explained later in this section.

The 120V AC system supplies power to high-demand appliances such as the air conditioner or microwave, along with standard household-style outlets for plug-in items like entertainment devices and small kitchen appliances. Additionally, it powers the converter/charger, which converts 120V AC power into 12V DC to supply the 12V system and charge the batteries.

Shore or Generator Power

The trailer's 120V AC system is energized when connected to a compatible external power source—either shore power from a campground or home outlet, or from a generator. To establish a proper connection, see Electrical Service on page 6-7.

Once connected, incoming shore power is routed to the distribution panel, where several breakers provide circuit load protection, and power is distributed to each appliance or receptacle; see Power Center on page 5-12.

Power will be available to all onboard systems when a shore connection is established. However, the ability to run multiple items simultaneously depends on the available amperage. A 30A or 50A, 120V shore connection (common campground service) provides significantly more capacity for running onboard systems than a residential outlet (15A or 20A). When using a generator, power output is limited to the generator's rated capacity.

Regardless of the type of connection, drawing more power than the available service can supply, such as running multiple high-demand loads at once, can exceed capacity and trip a breaker. If you experience a loss of power, check the circuit breakers inside your trailer, as well as the breaker at the power source, and reduce the load if necessary. For detailed information, see Circuit Breaker Protection on page 5-12.

If you are planning an extended stay, it's advisable to keep your trailer connected to shore power if possible. Staying connected to city power ensures a continuous supply of electricity for your appliances, lighting, and other onboard systems while also keeping the battery bank charged. Doing so reduces reliance on limited battery power and alternative sources, such as generators or solar, especially during periods of higher energy consumption.

Inverter Function

When shore or generator power is unavailable, the onboard 2000-watt inverter can be activated to convert 12V DC power from the battery bank into 120V AC, supplying a limited number of dedicated outlets labeled for inverter use. These outlets power the onboard television(s), as well as plug-in items like chargers and small electronics.

While some higher-wattage devices, like hair dryers or vacuum cleaners, may operate, they can quickly exceed the inverter's capacity or drain the batteries, especially when used in conjunction with other items. High-demand appliances such as air conditioners and microwaves are not supported; see Inverter on page 5-14.

120V AC Outlets/Receptacles

There are several power outlets, both inside and outside of your Airstream. Most outlets require an external shore power or generator connection to function. A limited set of dedicated, labeled outlets are on the inverter circuit.

12-Volt DC System

The term 12-Volt DC (12V DC) refers to the type of low-voltage electrical service your trailer uses to power essential systems, and is commonly associated with battery power. This power comes from the trailer's onboard battery bank and is also supplied, or maintained, by the converter/charger when connected to an external AC power source. Many vital components—such as interior lighting, the water pump, vent fans, LP gas detectors, the refrigerator, and control circuits for the furnace and water heater—rely on 12V DC power to operate.

The converter only provides 12V output when the trailer is connected to an external AC power source. When disconnected, the 12V system receives power from the batteries; see Converter / Charger Function on page 5-11

When operating on battery power alone, 120V components, such as the air conditioner, microwave, and standard outlets, will not function. However, some 120V AC power can be supplied by the inverter; see Inverter Function on page 5-10

Battery Power

The trailer's two 12V batteries are housed in a battery box located behind the LP tanks at the front of the trailer. Together, they form a battery bank that supplies power to the trailer's 12V DC electrical system when shore power is not available; see Batteries on page 5-15. The battery bank also powers the inverter, which converts DC power into 120V AC to supply a limited number of outlets when the inverter is turned on.

To operate the trailer's 12V system solely on battery power, the battery power disconnect switch must be ON; see Battery Power Disconnect Switch on page 5-14.

The more demand you place on the battery by using 12V system components, the faster the battery will discharge. Drawing more power increases current flow, which reduces the battery's runtime. Lithium batteries perform better under these conditions than lead-acid or AGM types, providing more usable capacity and maintaining stable voltage even under heavier loads.

Battery capacity is measured in amp-hours (AH), which indicates how much electric current a battery can provide over time. For example, a 100 AH battery can deliver 1 amp for 100 hours or 10 amps for 10 hours.

To estimate how much battery power you're using, multiply the current (amps) your device draws by the number of hours it runs: Amps (A) × Hours (H) = Amp-Hours (AH). For example, if a device uses 5 amps and runs for 4 hours, it will use about 20 amp-hours of battery power (5 A × 4 H = 20 AH).

For detailed information about the various methods of charging, see Battery Monitoring and Charging on page 5-17.

Converter / Charger Function

When connected to an external AC power source (shore power or a generator), the converter converts 120-volt AC input to provide 12-volt DC output. This output powers 12V circuits and charges the battery bank. When battery voltage is low, the converter continues to power DC loads while recharging the batteries. The batteries will charge whether the battery disconnect switch is ON or OFF. The converter automatically adjusts the charging process based on battery condition and cycles through multiple charging stages to maintain battery health, support efficient charging, and prevent overcharging.

For models with 30A service, the converter/charger is integrated into the power center. When switching the battery type between lead acid, AGM, or lithium, it is important to reconfigure the converter/charger to the proper charging profile for the new battery type. Please refer to a qualified service technician and the power converter/charger manufacturer's manual for details on reconfiguring the converter.

For models with 50A service, the power/distribution center and deck mount converter/charger are a two-piece system. If a different type of battery is utilized, the proper charging profile for the type of battery installed must be selected on the deck mount converter/charger. Please refer to a qualified service technician and the deck mount power converter/charger manufacturer's manual for details on changing the selection.

NOTICE

Battery damage may occur if the converter/charger is not properly configured with the appropriate charging profile. Consult a qualified service technician and refer to the converter/charger manufacturer's manual for setup.

If the converter is not powering the 12V system, first confirm that an external AC source is connected and providing stable power. If external AC power is present, check the circuit breakers in the distribution panel; see Circuit Breaker Protection on page 5-12. For full operating details and charging profiles, refer to the manufacturer's manual included in your owner's packet.

Power Center

The Power Center is a combined 120V AC and 12V DC distribution panel. It serves as a central hub for the trailer's electrical system, housing the circuit breakers and fuses. Its primary role is to provide circuit and load protection.

The Power Center is located in plain view near the floor on all units. To access the breakers and fuses, open the decorative front panel. Each breaker and fuse is clearly labeled inside.

⚠ WARNING

The power center is a centralized power switching, fusing, and distribution center. The potential for lethal electrical shock is present in this box. Inadvertent shorts at this box could result in damage and/or injury. All servicing of this box should be done by a qualified Service Technician.

⚠ WARNING

Disconnect/De-energize all main power service, shore power/generator power/battery power/ solar power/inverter power before servicing the breaker panel.

Circuit Breaker Protection

Standard residential-style (resettable) circuit breakers protect all 120 VAC loads. Airstream has installed breakers per RVIA (NEC) listing requirements.

Incoming shore power is routed to the distribution panel, where several breakers provide circuit load protection. With the exception of the inverter circuit, the main breaker turns off power to all branch circuits. Breakers are identifiable by the affixed labels. In the event of a 120-volt circuit failure, check the breaker for the shorline power source and the trailer's power distribution circuit breakers.

Like a light switch, the breaker's up position is ON, and down is OFF. If an overload or short occurs, the breaker will snap to the OFF position to protect the connected circuit. As a result, any device running on the circuit will lose power. Before attempting to reset the breaker, consider the cause. If a connected device is faulty or uses a higher amperage than the circuit breaker's capacity, turn it off before resetting the breaker.

Resetting a breaker requires external AC power going to the breaker box. Firmly push the breaker switch to the OFF position and back to the ON position. If the breaker snaps back to the OFF position during the reset, it indicates a fault condition that still exists and should be addressed by a qualified Service Technician. Similarly, if the breaker stays ON but snaps back OFF after turning on a potentially faulty appliance, it suggests a fault condition in that appliance that will require service by a qualified Technician.

Ground Fault Circuit Interrupter (GFCI)

The GFCI breaker provides reliable overload and short-circuit protection. GFCI breakers protect against ground faults and provide additional safety to the occupants on all outlets/receptacles. A ground fault occurs when current travels along an unintended path to ground, possibly through water or a person, which may result in an electric shock. The GFCI compares the amount of current going to and returning from the device plugged into the circuit's outlet/receptacle. When the amount of current going to the device differs from the amount returning, the GFCI interrupts the current within a fraction of a second, removing power from the circuit, and protecting the user.

Each GFCI circuit breaker is calibrated to trip with a ground current of 5 mA or more. Since most people can feel as little as 2 mA, a shock may be felt. The shock should be of such a short duration that the effects would be reduced, less than what would normally be a dangerous level. However, persons with acute heart problems or other conditions that can make a person particularly susceptible to electric shock may still be seriously injured.

While the GFCI circuit breaker affords a high degree of protection, there is no substitute for knowing that electricity can be dangerous when carelessly handled or used without reasonable caution.

The system incorporates GFCI breakers that implement an auto-self-test functionality. When turned off, these breakers require external AC power to be present before they can be turned back on. If power is present, and the breaker refuses to stay on, consult an electrician or certified RV technician.

⚠ WARNING

The GFCI circuit breaker will NOT reduce shock hazard if contact is made between a HOT load wire and a neutral wire or two HOT load wires. GFCI circuit breakers provide protection only to the circuit to which it is connected.

GFCI Breaker Test

Perform this test on the GFCI circuit breaker each month and record the date.

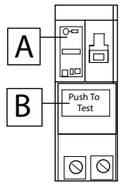

1. With handle A in the "ON" position, press PUSH TO TEST button B.
2. Handle A should move to the TRIP position, indicating that the GFCI breaker circuit is open.
3. Move handle A to the "OFF" position and back to the "ON "position to restore power.

If the device remains on when the Test button is pushed, the GFCI is not working properly or has been incorrectly installed (wired improperly). If your GFCI is not working properly, call a qualified, certified electrician who can assess the situation, rewire the GFCI if necessary, or replace the unit.

NOTICE

All GFCI breakers implement an auto self-test function, however, Airstream recommends a manual test be conducted every month.

Fuse Protection

All 12V circuits are protected by fuses located in the 12V distribution panel within the Power Center. Individual circuits may also be protected by in-line fuses, usually located near the source.

If a 12V appliance fails to operate, check the fuse panel and inspect the fuses. Always replace blown fuses with one of the same type and amperage.

If a replacement fuse blows immediately, do not replace it again. Have the circuit inspected by a qualified service technician. If a fuse holds for an extended period before failing again, and the metal strip inside shows signs of slow overheating, it may indicate an overload. Reducing the number of devices operating on that circuit may prevent future fuse failures.

Electrical System Operation

Battery Power Disconnect Switch

Pressing the battery power disconnect pushbutton switch allows you to safely turn the 12V DC system on or off by connecting or disconnecting the batteries from the 12-volt distribution panel.

The switch illuminates when turned ON and battery voltage is within a normal operating range. If voltage drops too low, the light will blink for five minutes to indicate the batteries need to be charged. Connect to shore power as soon as possible. If no charge source is present, the switch will shut off to protect the batteries.

If connected to shore power, the batteries will charge whether the switch is ON or OFF. Likewise, solar and tow charging will occur whether the switch is ON or OFF. The OFF position is intended for trailer storage or when conserving power.

NOTE

The LP gas detector remains powered at all times and produces a very small parasitic draw, regardless of whether the battery disconnect switch is ON or OFF.

Inverter

To operate the TV and supply power to the labeled 120-volt receptacles when shore power is not available, the inverter must be turned ON. The battery disconnect switch must also be ON for the inverter to function. A remote display, located in the galley area, provides inverter status information and basic control options.

The system includes built-in under-voltage and over-voltage protection to safeguard both the inverter and the battery bank. If the inverter detects excessive voltage or current draw, it may shut down to protect the system. In such cases, unplug any high-draw devices and perform a manual reset.

Display Features

Power Button: Press to turn on; hold to turn off

Select Button: Cycles between display states: Input Voltage, Output Voltage, Output Power, Sleep, Error Code (if applicable)

Power Indicator: Illuminates green when the inverter is on

Fault Indicator: Illuminates red when an error has occurred

Shore Indicator: Illuminates yellow when AC input is detected

Low Battery Warning Indicator: Illuminates red when the battery is nearing the end of its charge

Sleep: Lights automatically dim after 30 seconds

NOTE

An operation manual for the inverter has been provided with your owner's packet. Their manual contains information and error codes that should be reviewed prior to operating.

NOTE

To conserve power, turn the inverter off when not in use.

Batteries

Airstreams can be equipped with one of three common battery types used in the RV industry: Lithium, AGM (Absorbent Glass Mat), or Lead Acid.

NOTICE

The converter/charger profile is set to a lithium battery profile when it leaves the factory. It must be properly configured for the type of batteries installed. Battery damage may occur if the converter/charger is not properly configured with the appropriate charging profile.

If you selected the optional solar package with lithium batteries, those components were installed at the Airstream factory; see Factory Installed Lithium Batteries (Optional) on page 5-15. Otherwise, your batteries were installed by your Airstream dealer; see Dealer Installed Batteries on page 5-16.

The following sections focus primarily on the lithium battery option, with some basic information about other battery types that may have been installed by your dealer. For detailed specifications, maintenance, and safety information related to dealer-installed batteries, please consult the manufacturer's documentation for the specific batteries selected for your Airstream.

⚠ WARNING

Before removing the batteries, verify that shoreline power is not connected. The risk of electrical shock may be present.

⚠ WARNING

Be sure to reconnect the battery cable terminals to the correct battery posts. Failure to do so could damage the battery and connected systems and potentially cause injury.

⚠ WARNING

Before use, review all safety information, including Notes, Cautions, and Warnings, provided the battery manufacturer.

Factory Installed Lithium Batteries (Optional)

If your Airstream was equipped with two 100Ah 12V LiFePO4 batteries at the factory, before operating the system, please read the Battleborn literature in your Owner's Packet for important warnings/limits, operating instructions, storage, and maintenance instructions. For more information, scan the QR code above or visit https://battlebornbatteries.com/.

Lithium-ion batteries outperform traditional lead-acid batteries and offer more usable energy. They have a life span of approximately 3000-5000 cycles. A discharge and a charge determine a cycle. The number of cycles a lithium battery can sustain varies by use. A battery that is only ever discharged to 50% will have more cycles than a battery repeatedly discharged to 0%. Lithium batteries require no active maintenance. The use of lithium batteries also delivers more energy at typically half the weight of a traditional battery.

Battery Management System (BMS)

The BMS is an internal component of the batteries and is crucial to ensuring safe operation. The BMS monitors cell voltages, currents, and temperatures to ensure they operate in a safe range and will shut the batteries down should any faults occur. The following are features of the BMS:

- Over/under voltage protection
- High current protection/short circuit
- High-temperature protection
- Low-temperature charging protection
- Cell balancing

High Voltage Disconnect

If an individual cell voltage exceeds a prescribed threshold during charging (approx. 14.7V), the BMS will prevent a charge current from continuing. Discharge is always allowed under this condition.

NOTICE

Even though the BMS will protect against issues from overcharging, it should be avoided. The recommended specs are 14.2-14.6V bulk/absorb and below 13.8V float.

NOTE

If the battery has not been balanced for a long period, a high voltage disconnect could occur at a lower voltage. The battery will rebalance after several full charges.

Low-Voltage Disconnect

If an individual cell falls below a prescribed threshold during discharge (approx. 10.5V), the BMS will prevent further discharge. Should this occur, connect to external power using the shoreline power cord to bring the battery out of the low-voltage disconnect and fully charge the battery. Also, see Battery Monitoring - with SmartShunt on page 5-17.

Bringing a battery out of low-voltage disconnect only "wakes" the battery and allows it to accept a charge. Without shore or generator power, the battery may go back into low-voltage disconnect.

NOTICE

The manufacturer states you should charge (wake) your battery within 24 hours of entering low-voltage disconnect; otherwise, you risk damaging the battery and voiding the warranty.

NOTICE

If the battery is in low-voltage disconnect mode and the battery temperature is below 35°F, the heat function will need some time to warm the battery before performing the wake-up procedure.

Battery Heaters/Cold Weather Usage

Lithium-ion batteries may not charge effectively if the internal temperature drops below 35°F (1.6°C). An internal heating element and switch have been added to allow battery usage and charging in cold weather.

The switch is on the side of the battery box. If the red portion of the switch is visible, the battery heaters are ON. When the switch is on, the heater will automatically activate when the internal temperature drops below approximately 35°F (1.6°C) and will shut off when the internal temperature exceeds approximately 45°F (7.2°C). The switch should be turned OFF when storing your trailer to prevent battery discharge.

The heated batteries consume an average of 1.8 amps. Testing indicates, that at 0°F, with no insulation, the heater would be on about 30% of the time. With no other loads or charging, the batteries would give approximately 185 hours of heat capability before the batteries would go into LBCO shutdown. These values are based off testing with the batteries at 100%.

NOTICE

The battery heater's should be turned ON if the outside temperature drops below 35°F

Dealer Installed Batteries

This overview covers Lead Acid and AGM batteries. For detailed specifications, maintenance, and safety information related to dealer-installed batteries, please consult the manufacturer's documentation for the specific batteries selected for your Airstream.

NOTICE

Battery damage may occur if the converter/charger is not properly configured with the appropriate charging profile. Consult a qualified service technician and refer to the power converter/charger manufacturer's manual for setup.

Lead Acid Batteries

Lead Acid Batteries require periodic cleaning and occasionally need refilling. Follow the battery manufacturer's instructions for service and storage, and wear proper protective gear when handling batteries. Lead acid batteries are generally maintained and stored as follows:

Maintain a clean battery top and check terminals and cables for tightness and cleanliness. A dirty lead acid battery will dissipate its charge through surface contamination.

Ensure the caps are in place and tightly sealed before cleaning. If a baking soda-water solution is used for cleaning, and it gets into the battery, it will neutralize the battery acid. Clean the top of the battery using a ratio of two tablespoons of baking soda to a pint of water. Clean the battery terminal connectors with a wire or nylon brush to remove dirt and corrosion. Ensure the terminals are tight and free of corrosion.

During winter, lead acid batteries should be removed from the trailer and stored in a cool, dry place where there is no danger of freezing. They should be clean and properly filled. Charge every 30-60 days. A battery that is allowed to lose its charge completely will never regain its original power or fully charge. When leaving the battery in the trailer, it is unnecessary to leave it on charge. Disconnect the negative battery cable to prevent the battery's inadvertent discharging, which may lead to a complete discharge.

AGM Batteries

AGM (Absorbent Glass Mat) batteries require very little maintenance other than keeping them clean and ensuring tight terminal connections. For information on how to properly maintain and store AGM batteries, consult the battery manufacturer's instructions.

Battery Monitoring and Charging

Your Airstream's batteries are charged primarily through shore power or the tow vehicle, and if equipped, with the solar charging system helping to maintain battery charge when those sources aren't available. This section explains how battery charge status is monitored, and how each charging method works.

NOTICE

Avoid letting the battery get too low in charge, and never store a battery without fully charging it first. Keep your battery in a cool and dry place with plenty of ventilation, and remember to recharge as directed by the battery manufacturer.

NOTE

A battery will self-discharge 1-3% per month at 80 degrees. Depending on environmental conditions, this discharge rate may increase.

Battery Monitoring - with SmartShunt

Airstreams with the factory-installed lithium battery option will have a SmartShunt. The SmartShunt connects via Bluetooth® to the VictronConnect app on your smartphone (or tablet) to conveniently read out all monitored battery parameters, like state of charge, time to go, and historical information. To learn more and to download the app, scan the QR code above, click on one of the icons below, or visit https://www.victronenergy.com/ and click on downloads.

Use the default PIN code 000000 to sign up

NOTE

Airstreams without the factory-installed lithium option will have a ground stud instead of the Smartshunt. If lithium batteries are installed by a dealer, it is recommended a Smartshunt be installed.

NOTE

If the SOC is not displayed or shows dashes, the SmartShunt may have lost calibration due to the batteries being disconnected or fully discharged beyond BMS protection. To recalibrate, fully charge the batteries to 14.3 volts. Fully discharged batteries may take longer to charge, and because some converters limit charge time, you may need to unplug and reconnect shoreline power to complete charging.

Battery Monitoring - Dealer Installed Batteries

Battery voltage can be checked on the Monitor Panel, see Viewing Battery Voltage on page 5-9. To help interpret what the voltage means in terms of available battery power, consult your battery manufacturer's documentation. To understand how battery capacity and power usage affect available operating time, see Battery Power on page 5-11.

Shoreline Connection Charging

Plug the cordset into an external AC power supply. Verify the cordset's LED indicator is illuminated and plug the other end into the trailer's roadside SmartPlug inlet. For more information, see Shoreline Power Inlet and Cordset on page 6-7.

When the trailer is plugged into an external AC power source, the 12-volt distribution panel receives power from the converter, and the batteries are charged through the converter charging system. Charge will flow to the batteries regardless of the battery disconnect switch position.

The amount of time it takes to charge the batteries depends on a variety of factors, including available shore power amperage, state of charge of the batteries, efficiency of the onboard charger, ambient temperature, and any power usage while charging. Higher amperage shore power connections (such as 30A service) allow for faster shore charging while lower amperage connections (such as 15A or 20A) will extend charge times.

Tow Vehicle-Supplied Charging

Your Airstream's batteries can be replenished, depending on the tow vehicle, from the tow vehicle alternator through the 7-way cord. Charge will flow to the batteries regardless of the battery disconnect switch position.

Solar Power Charging

If equipped, the rooftop solar panels on your Airstream help maintain battery health, reduce operating costs, and extend overall battery life. The system's charge controller collects energy from the panels and directs it to the battery bank. The controller display provides live status information, such as solar input in watts and battery voltage. Charge will flow to the batteries regardless of the battery disconnect switch position. For solar wiring, see Electrical Diagrams on page 8-17.

To optimize solar charging, ensure the panels are clean and not shaded or blocked from the sun. Please refer to your owner's packet for reference material that discusses the solar system and its operation.

The charge controller is configured for a three-step charging process:

1. Bulk - The controller delivers as much charge current as possible.
2. Absorption - The controller switches to a constant voltage mode.
3. Float - Voltage is applied a fully charged state.

Airstreams manufactured without the solar option have been pre-wired to support solar panels. These units will have a 3-port rooftop-mounted plug-in that allows installing rooftop solar panels without running wires.

In addition, a quick plug-in port suitable for a portable solar charging kit is located roadside, under the trailer near the front. Portable solar panel kits MUST include a solar controller that is set to the profile of the battery you chose for your Airstream, and cannot have an output of more than 30 amps. The solar port is fused at 30 amps.

NOTICE

Do not unlock or tamper with the MPPT Control system settings. Changes to the settings will negatively affect the system's performance and could damage your batteries.

NOTE

If battery voltage falls below 11.5V, solar charging may not be effective; the batteries should be charged by other means.

Entertainment Systems

TV and Sound System

All Airstream Globetrotter travel trailers are equipped with a Bluetooth-enabled stereo and Bluetooth-enabled Smart TVs. For operating information, please refer to your owner's packet and resources provided by the audio and TV component manufacturers.

The following sections provide basic information about the components of the entertainment system and connecting devices, which are subject to change with new product developments and improvements. For detailed operating information, please refer to your owner's packet and resources provided by the audio and TV component manufacturers. Some TV's also have manuals available through the on-screen menu.

Blu-ray/DVD Player and Streaming Device Connection

Blu-ray/DVD players and streaming devices can be connected to the main TV using the *Bring Your Own Device* HDMI/Ethernet wall port (located in the media roof locker). Devices can be powered using the outlet next to the HDMI/Ethernet wall port or by plugging them into the nearby USB port. Streaming devices require internet access.

TV and Audio Component Pairing

To pair a Bluetooth audio device with your Airstream's TV, first set the device to pairing mode. Then, access the TV's settings menu and follow the prompts to select the Bluetooth device from the available list. Please note, the stereo can connect to only one TV at a time via Bluetooth.

Smartphone and Stereo Pairing

Most smartphones can be paired with the stereo to stream music. To do this, put the stereo into pairing mode, enable Bluetooth on your smartphone, and select the stereo from the list of available devices.

Cable/Satellite Connection

You can establish an external cable TV or satellite connection by attaching a cable TV service provider's coax cable, or a satellite coax cable, to the external roadside SmartPlug cable/satellite and ethernet inlet; see SmartPlug Cable/Satellite and Ethernet Inlet on page 6-7. A receiver can be installed by removing the booster cover plate and using coax to add the receiver between the cable input and output.

TV/Radio Antenna

The roof-mounted TV/Radio antenna receives free Local VHF/UHF TV signals and FM radio signals. The signal is boosted to maximize signal strength and provide TV and radio reception. The booster must be turned on to receive Local VHF/UHF TV signals and FM radio signals.

The antenna booster is controlled by a switch on the antenna booster's wall plate inside the media roof locker. Press the small pushbutton on the wall plate to turn **ON** the booster. To view cable or satellite, you will need to turn it **OFF**.

The antenna is constructed of durable automotive-grade plastic that is UV-protected, weatherproof, and capable of withstanding outdoor climates. Clean the antenna with mild soap and water only. Do not powerwash or use harsh cleaning solutions, solvents, or alcohol to clean the antenna or antenna base.

Ethernet Connection

You can establish an internet connection by attaching a service provider's ethernet cable to the external roadside SmartPlug cable/satellite and ethernet inlet (see SmartPlug Cable/Satellite and Ethernet Inlet on page 6-7). The inlet is routed to the *Bring Your Own Device* HDMI/Ethernet wall port (located in the media roof locker). A modem and Wi-Fi router can be connected to the wall port via ethernet and powered by the nearby outlet.

Appliances

Appliance Manufacturer's Manuals

The appliances installed in your Airstream typically include manuals provided by their respective manufacturers, which are often found in your owner's packet. If a manual didn't come with the appliance, the Certified Performance Checkout sheet in your owner's packet lists the manufacturer, model, and serial number for each appliance.

⚠ WARNING

Always read and follow each appliance manufacturer's instructions before use. Their manuals include critical safety information and guidance on proper use and maintenance.

The information contained in the appliance manuals supersedes any information contained in the Airstream Owner's Manual content on appliances. If you believe contradictory information on appliances is contained in this manual, or if any appliance manual(s) have not been provided with your Airstream, contact your dealer, the respective appliance manufacturer, or Airstream Customer Service at 937-596-6111 or email: support@airstream.com.

⚠ DANGER

Airstream recommends shutting off the gas supply at the LPG tanks before refueling the tow vehicle or entering a refueling station. Many LPG appliances used in trailers vent to the exterior. When parked near a fuel pump, gasoline fumes can enter these vents and ignite from an open burner flame CAUSING A FIRE OR AN EXPLOSION.

Maintenance

Follow the instructions and warnings noted in the respective appliance and equipment owner's manuals, as well as those mentioned below.

Annual maintenance should be conducted on propane gas appliances and equipment by an authorized dealer or repair facility.

Insects can build nests in the burners of various appliances and equipment. The burner and burner orifice of the propane gas appliances and equipment should be cleaned out by an authorized dealer or repair facility anytime circumstances or conditions warrant, but no less than on an annual basis.

Air Conditioner

Depending on the model, your Airstream will have one or more high-efficiency rooftop air conditioners with an integrated heat pump, allowing each unit to produce both warm and cool air temperatures. Please refer to the air conditioner manufacturer owner's manual for operating and maintenance instructions (located in your owner's packet). For thermostat operation, see Thermostat on page 5-21.

Proper voltage to the air conditioner is critical. A voltmeter check may find voltage much lower at a campground shoreline outlet than the needed 110 to 120 volts. Low voltage is usually associated with older or poorly maintained trailer parks. Parking your trailer so the power cord can be plugged in to a receptacle close to the fuse or circuit breaker box can alleviate low voltage problems. Avoid extension cords and adapters whenever possible. If an extension cord must be used, it should be as short and heavy as possible to provide the most current.

If high temperatures are expected, make an effort to park in a shaded area. Starting the air conditioner early in the morning also helps. It is more efficient to hold a comfortable temperature than it is to lower the temperature after the interior of the trailer is already hot.

Never run your air conditioner with the vents closed. Doing so could cause the air conditioner to freeze and may damage to the unit. The manufacturer recommends having at least 3 AC vents open when running to prevent any chance of freezing up.

Air Conditioner Filters

The exterior sponge filter can be gently washed with soap and water as needed. The white pleated Merv 8 filter must be replaced. Replacement times will vary greatly depending on how often the air conditioner is used. With frequent use, the filter may last 3-4 months. With infrequent use, it may be possible to replace the filter annually. Contact your dealer or Airstream directly to obtain a replacement.

⚠ WARNING

Review the air conditioning literature supplied in your owner's packet before proceeding.

NOTE

The AC Heat Pump Operation works well only when the ambient temperature is above 45° F/ 7°C.

Ducted Roof System

Globetrotter trailers are designed with a ducted roof system. This system provides a more efficient air flow throughout the trailer and allows equal air to be blown from each vent. The ducted roof helps to create a more balanced temperature inside the trailer.

NOTE

For models with more than one A/C unit: The ducting system is connected which may cause some air to flow from all vents even when only one unit is un use.

Furnace

The manufacturer of the furnace in your trailer has been well known in the RV industry for many years. The furnace burns LP gas, and is powered by 12-volt current from the batteries or power converter when plugged in to city power. Operating instructions are located in your owner's packet. If they should become misplaced, new literature can be ordered directly from the manufacturer or your Airstream dealer. The manufacturer also offers a detailed service guide for your furnace. For thermostat operation, see Thermostat on page 5-21.

⚠ WARNING

Carefully read all the manufacturer's instructions prior to operating. NEVER store flammable material next to the furnace or in close proximity to the furnace exhaust outlet on the side if the trailer.

NOTICE

If warranty service is required, use only a service location recommended by the furnace manufacturer or your Airstream dealer.

Thermostat

There is one thermostat for each rooftop air conditioner installed on your Airstream. Only one of the thermostats, typically the main living area, controls the furnace and heat pump + furnace modes.

Please refer to the thermostat manufacturer's manual for operating instructions and to troubleshoot onboard diagnostic fault codes and flashing icon codes. The manual can be found in your owner's packet or on the manufacturer's website by scanning the QR code to visit https://coleman-mach.com/ where you can navigate to product support for your thermostat.

NOTE

The thermostat must have all zones set to OFF to change between Cool and Heat.

NOTICE

The touchscreen of the thermostat is sensitive. Avoid pressing hard or using objects that may damage the thermostat.

Ceiling Vent Fan

Review the vent fan manufacturer's instructions in your owner's packet before operating, cleaning, or servicing the fan. Follow the labeling on the fan to unlock, open, and change fan settings as desired. Certain models have a built-in safety switch that will not allow the motor to operate unless the dome is open approximately 3 inches or more.

The high-volume ceiling vent exhausts stale hot air and draws in fresh, clean air. To maximize airflow, close all other vents and open the window or door furthest from the vent fan.

NOTICE

For models with a locking knob, it may be necessary to slightly rotate the knob to properly align it to the lock. Do not use excessive force when operating the locking knob.

Thermostat and Rain Sensor

The fan is equipped with a built-in thermostat and rain sensor. Select the thermostat setting and the fan will automatically turn on and off as your trailer heats up and cools down. When the rain sensor becomes wet the dome will close automatically and shut the fan off. Some models will automatically open and run once the sensor is dry. Some models will beep when buttons are pressed to indicate the sensor is wet and needs to dry before operating.

NOTE

If the lid is opened manually, the rain sensor will not close the lid automatically. The sensor must be dry for the fan to operate.

Cleaning Instructions

⚠ CAUTION

Never operate the fan with the screen removed and always disconnect power before cleaning or servicing. Review the vent fan manufacturer's cleaning instructions before cleaning or servicing the fan.

To clean the screen, turn the fan motor and battery disconnect switch OFF. The screen may be friction held or have retainer clips that need turned halfway to remove. Remove the screen and clean with a mild soap and water solution. Carefully pat dry with a soft cloth and reinstall.

NOTICE

The use of certain cleaners can cause cracking and product failure. Review the vent fan manufacturer's cleaning instructions before cleaning or servicing the fan.

Exhaust Vent

Operation

The bath exhaust vent (shown above) removes moisture from the air when using the shower. To operate, you first need to open the vent.

To open the vent, push the button on the handle to disengage the clip and slide the handle upward until the clip engages. Once open, turn the fan on by pressing the ON/OFF button.

Turn the fan off before closing the vent.

To close the vent, push the button on the handle to disengage the clip and pull the handle down until the clip engages in the lowered position.

NOTICE

Turn OFF the fan before closing the vent. Damage to the motor can occur if the fan runs with the vent closed.

Cleaning Instructions

⚠ CAUTION

Never operate the fan with the screen removed and always disconnect power before cleaning or servicing. Review the vent fan manufacturer's cleaning instructions before cleaning or servicing the fan.

To clean the screen, turn the fan motor and battery disconnect switch OFF. Remove the four retainer screws. Clean the screen with a mild soap and water solution only.

Fuse

To change the 5 Amp fuse:

1. Make sure the fan is off.
2. Remove the cap by turning it to the left to gain access.
3. Replace with a type GMA 5A fast-acting fuse.
4. Replace the cap to secure the fuse in the holder.

Water Heater

Your owner's packet includes a water heater manual containing detailed instructions and important safety warnings that must be observed, explanations of controls and display symbols, required periodic maintenance, and comprehensive troubleshooting.

The following provides a basic overview of how the recirculating water heater in your Airstream functions, how it integrates into the plumbing system, and some common issues.

⚠ WARNING

The water heater manual contains specialized warnings and cautions that should be reviewed before operating the appliance. If this manual was not included with your trailer, contact Airstream or the appliance manufacturer to obtain a copy.

Startup

Button Functions		
	ON/OFF	Power button. Switch from turning unit ON or turning unit OFF.
	Recirculation	Recirculation button. Switch from turning recirculation feature ON or OFF.
	UP	INCREASE Set Temperature
	DOWN	DECREASE Set Temperature

Press the ON/OFF button. Once the water heater is on and a hot water fixture is opened, the water heater senses the flow of water and initiates startup. Per the manufacturer's manual, proper burner ignition takes approximately 7 seconds after the user turns on a faucet or other plumbing fixture. It may then take several seconds for hot water to reach the faucets due to residual cold water in the lines.

Airstream recommends setting the water heater so that fully opening the hot water fixture alone delivers water at a comfortable temperature for showering. This prevents scalding, eliminates the need to mix in cold water, and reduces potential cycling of the water heater caused by high temperature settings.

⚠ WARNING

Water temperatures above 125°F (52°C) can cause severe burns or even death from scalding. Children, elderly individuals, and persons with disabilities are at the greatest risk. Always test the water temperature by hand before entering the shower.

NOTICE

The water heater has built-in freeze protection and will cycle the burner for 5 seconds when the water temperature has fallen below 41 °F(5°C). To provide this freeze protection, the gas supply must be ON, gas must be available and electrical power must be ON.

Recirculation Feature

The recirculation system includes the galley and shower hot water lines. Press the recirculation button on the controller to turn it on or off. With recirculation enabled, the water heater will periodically cycle on and off to maintain the set point temperature in these lines.

Once the recirculating feature is turned on, it will remain active and cycle as needed until it is manually shut off or power is removed from the unit. If power is disconnected the feature will need to be reactivated.

Common Issues

A hot water fixture must be open to at least 0.4 GPM for the unit to run. The burner will usually ignite in just a few seconds, unless your LPG system has not been used for some time and there is air in the lines. After three failed ignition attempts, the water heater will go into a lockout mode and will not try to light the burner again. The heater may require several ignition cycles before all air is purged from the gas lines. To reset, turn the water hear OFF, then back ON.

⚠ WARNING

This appliance does not have a pilot. It has an ignitor which automatically lights the burner. Do not try to light the burner by hand.

⚠ WARNING

It is dangerous to operate a tankless water heater unattended. This may occur if a leak develops or if a faucet is left open. For this reason the water heater will shut off after running for 20 minutes.

If the water heater runs for more than 20 minutes lockout will occur (see warning above). To restart the water heater turn the water off and back on or press the power button off and back on.

NOTE

If you only get warm water for extended periods, check that the exterior shower valves are fully closed. If left open, they can allow cold water to mix with hot water, resulting in warm water only at interior valves.

Refrigerators

Review all refrigerator literature supplied in your owner's packet or stored in the refrigerator prior to operating it.

Globetrotter models have all-electric refrigerators which feature a strong 12V compressor, no LPG is required. Depending on your model, to turn the refrigerator on, touch and release the ON/OFF button. The blue indicator light will glow solid blue to indicate that the refrigerator is on, or use the wide range thermostat designed to sense the evaporator (cold plate) temperature. The coldest position on the thermostat is reached by turning the knob to the right (clockwise); conversely turning the thermostat knob to the left (counterclockwise) yields a warmer setting. The OFF position is reached by turning hard counterclockwise past the click. The reference point is shown with an indicator sticker beside the knob.

To get ready for a trip, start your refrigerator and let it cool for eight hours before loading with food. For the best cooling performance, let air move freely inside the compartments.

It will be necessary to defrost the refrigerator and freezer compartment from time to time. Frequency depends on usage, the number of times the door is opened and closed, and the humidity level. To defrost, turn the refrigerator off and prop open the door. Most of the condensation will run out of the condensate tube to the outside of the trailer. Use dry towels to keep extra condensation from dripping onto the floor. Do not use heat or sharp objects to speed up the defrosting process as this can damage the unit.

Clean the interior periodically with mild cleaner or solution of liquid dish detergent and warm water. Rinse with a solution of baking soda and clean water.

NOTICE

Speeding up the defrost process with a knife or scraper is strongly discouraged due to the likelihood or rupturing the refrigerant circuit.

Cooktop

There is little difference between the operation of home gas ranges and the trailer's cooktop. If, however, you are used to an electric range, operating confidence can be quickly gained by reading the manufacturer's directions provided in the owner's packet. Manufacturer's service and parts manuals are also available.

⚠ WARNING

An operation manual for the cooktop has been provided with your owner's packet. If this has not been provided with your trailer, contact the listed manufacturer to obtain. Their manual contains specialized warnings and cautions that should be reviewed prior to operating the appliance.

Microwave Ovens

The trailer must be connected to external power to operate the microwave. Depending on the manufacturer, Instructions may be included in your owner's packet. Refer to the Certified Performance Checkout sheet, included in your owner's packet, for manufacturer, model, and serial number information.

NOTES

AIRSTREAM®

Section 6
EXTERIOR

EXTERIOR FEATURES AND CARE 6-2
- Exterior Aluminum Skin 6-2
- Windows 6-2
- Emergency Escape Windows 6-2
- Aluminum Wheels 6-2
- Step 6-3
- Main Door 6-3
- Screen Door 6-3
- Front End Protection 6-4
  - Window Stone Guards 6-4
  - Stainless Steel Rock Guards 6-4
- Wireless Observation System 6-4
  - Backup Camera 6-4
  - Over-the-Door Camera 6-4
  - Monitor 6-4
- Power Awning 6-5

WATER SERVICE 6-6
- Gravity Water Fill 6-6
- City Water Hookup 6-6
- Exterior Shower/Sprayer Port 6-6

ELECTRICAL SERVICE 6-7
- Shoreline Power Inlet and Cordset 6-7
- Exterior Outlet 6-7

CONNECTIVITY 6-7
- SmartPlug Cable/Satellite and Ethernet Inlet . 6-7

CHASSIS FEATURES 6-8
- Axle and Running Gear Assembly 6-8
- Nev-R-Lube Drums/Bearings 6-8
- Hitch/Coupler 6-8
- Power Stabilizing Jacks 6-9
- Power Jack 6-9
  - Power Jack Blade-Style Circuit Breaker . . 6-9
  - Manual Operation 6-9

LP GAS SYSTEM 6-10
- Liquid Petroleum Gas (LPG) Supply 6-10
  - Fill Valve 6-10
  - Automatic Gas Regulator 6-10
  - LPG Tanks 6-11
- Exterior LPG Port 6-12
- Basic Rules For LPG Safety 6-12
  - If You Smell Gas 6-12

Exterior Features and Care

Airstream Supply Company is your trusted source for Airstream-approved cleaners, sealants, and other care products and supplies needed to properly maintain your Airstream's exterior. Scan this QR code to visit and explore our recommended assortment of RV care products and much more at airstreamsupplycompany.com.

Exterior Aluminum Skin

We recommend the trailer be washed about every four weeks and waxed with Walbernize Super Seal, or high quality clearcoat-safe wax, in the spring and fall. In coastal and industrial areas, cleaning and waxing should be done more frequently. When traveling through winter weather, all road treatment chemicals should be removed immediately.

NOTICE

Abrasive polishes or cleaning solvents such as automatic dishwasher or acid etch cleaners are too strong and should never be used. Rinse all grit from surface prior to washing. Use soft rags or wash mitts, always moving lengthwise with the grain of the trailer (washing or polishing). Never rub hard on the coating. Even the softest rag will damage the coating if excessive pressure is applied.

NOTICE

Always clean your trailer in the shade or on a cloudy day when the aluminum skin is cool.

Oil, grease, dust, and dirt may be removed by washing with any mild non-abrasive soap or detergent. Cleaning should be followed by a thorough clean water rinse. Drying the unit with a chamois or a soft cloth may prevent spots and streaks.

After cleaning and drying, a good grade of non-abrasive automotive paste or liquid wax will increase the life of the finish, especially in coastal areas where the finish is exposed to salt air or in polluted industrial areas. It will also protect the shell from minor scratches and make subsequent cleaning easier.

It is important to remove substances such as sap, gum, resin, and asphalt as soon as possible by washing and waxing. Sunlight and time will bake-harden these materials, making them almost impossible to remove without heavy buffing. If asphalt remains on the trailer after washing, use a small amount of kerosene on a rag and wipe the spots individually, being careful not to scratch the finish.

If a substance is found on the coating that cannot be removed by normal washing procedures, Airstream recommends using DX 330 Acryli-Clean, made by PPG Industries. Follow all directions and warnings on the product container.

Acryli-Clean should be used by trained personnel only, using the proper equipment under controlled conditions. Use the Acryli-Clean as sparingly as possible to remove glue, tar, and other similar substance. To keep your trailer looking new, paint the A-frame, LPG tanks, and rear frame periodically.

It is recommended that the caulking and sealant used in external seams and joints, such as end-shell segments and around window frames, light bezels, beltline and rub rail molding, etc., be checked once a year. If this material has dried out and become cracked or checked, or if a portion has fallen out, it should be replaced with fresh material to prevent possible rain leaks. Caulking and sealing products are available from your Airstream dealer.

Windows

Clean your trailer windows the same way you clean the windows in your home. Clean the seals with a damp cloth and mild detergent every three to six months. Do not use strong solvents, as they will damage the seals. Using a soft cloth, apply 303 Aerospace Protectant to the window seal. Remove any residue that comes in contact with the exterior aluminum skin. This is a good practice for all rubber seals in your trailer.

⚠ WARNING

Failure to properly clean and treating the window seals may result in windows sticking to the jambs. Severely stuck windows should be released only by a qualified technician. Do not force, pry, or apply excessive pressure, as this may shatter the window and cause injury; see Sticking Windows on page 8-16.

Emergency Escape Windows

To remove the screen, pull out the screen cord by the cord loop at the bottom portion of the window. Turn the two red latches inward and lift the two red arms on each side, in unison, to open the window and push it out for clearance.

Aluminum Wheels

The aluminum wheels and axle end cover come treated with a clear coating. Keep them looking good by washing with soap and water. Do not use abrasive cleaners or polishes on coated aluminum wheels.

Step

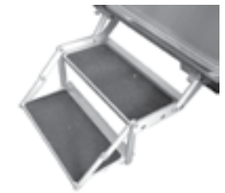

To operate the step, lift up on the front of the step and pull straight out until step locks into place. Some units will be equipped with a double step. After extending the step, the second portion folds out. To store the step, fold it back into position, lift the front slightly and push the step back into its storage area.

⚠ WARNING

Never enter the trailer without lowering the steps. Always check that the steps are down before stepping out of the trailer. Once the steps are lowered, press down on them to make sure they are secure in their notches. Never travel with step lowered or extended.

Main Door

The orientation of the latch assembly shown above may be inverted on your trailer, depending on the direction the door opens.

⚠ WARNING

BEFORE TOWING

The door handle and deadbolt must both be locked from the exterior using the keys. Never lock them before shutting the door. Failure to fully lock both the handle and deadbolt using the keys in the manner described as follows may result in the door vibrating open during travel.

Close and lock the door from the exterior using the keys in the following order:

1. DOOR HANDLE: Insert the ROUND KEY and rotate it counterclockwise until it stops and an audible CLICK is heard; rotate the key back approximately 1/4-turn to the vertical position to remove it.
2. DEADBOLT: Insert the SQUARE KEY and rotate it counterclockwise until it stops and an audible CLICK is heard; rotate the key back approximately 1/4-turn to the vertical position to remove it.

Pull on the handle to verify the door is secured.

⚠ WARNING

Never transport passengers inside a trailer. Towing a trailer with passengers inside is unsafe and could result in death or serious injury.

NOTICE

To avoid damaging the door jamb and latch assembly, ensure the deadbolt is retracted before closing the door.

The main door has a hold-back that secures it to the side of the trailer when the screen door is in use. To use the hold-back, gently push the door into the spring-operated slide to latch it; slide the hold-back to release. For lubrication and out-of-adjustment issues, see Main Door Care on page 8-16.

Screen Door

The screen door is secured to the main door by a slide bolt-type latch. It can be operated independently by releasing the slide bolt and swinging the screen door away from the main door.

NOTICE

Always reattach the screen door to the main door prior to closing the main door; otherwise, damage may occur.

Front End Protection

Window Stone Guards

The tinted solar plexiglass window stone guards on the front of your Airstream provide added protection from road debris while traveling and reduce the effects of sun rays.

Raise the center window guard to allow air to flow when the window is open. To raise, unhook the two rubber T-handles on the bottom of the guard, lift the guard to the desired height, and tighten the thumbscrews on each support arm. Be sure to lower and fasten the guard when high winds are approaching and before travel.

The corner window guards are removable for cleaning. Airstream recommends removing the corner guards from the unit when cleaning to avoid damaging the guards. There are two screws on each corner guard near the center guard. A quarter-turn will loosen the screws, and the guards will swing outward on their hinges. Lift the guards off the hinges to remove them.

NOTICE

Close window guards before high winds and storm conditions approach, or when towing to avoid damage to the trailer and window guards that cannot be covered by warranty.

Stainless Steel Rock Guards

Stainless steel rock guards protect the front end from road debris. You can clean behind the rock guards by swinging them forward on their hinges. They are locked in place with two acorn-style nuts, removable with a 7/16” wrench.

Wireless Observation System

Your Airstream is equipped with a Wireless Observation System that includes two cameras, each with its own transmitter, which send video to a shared wireless monitor.

Backup Camera

A backup camera is mounted below the awning at the back of the trailer, providing a view behind the trailer. It is powered through the 7-way connection when the tow vehicle’s running lights are on, and also when the battery disconnect switch is on.

Over-the-Door Camera

The over-the-door camera provides a view of the area outside the entry door and is displayed on the same wireless monitor as the backup camera. It operates on your Airstream’s 12V system when the battery disconnect switch is on.

Monitor

The wireless display monitor can be powered using your vehicle’s 12V accessory socket, or it can be powered inside the trailer with the provided USB-to-12V socket adapter. The over-the-door camera and the backup camera can be viewed simultaneously when the battery disconnect switch is on.

To switch between camera views, press the SEL/PAIR button to cycle through the available channels. Some channels display pairing information; skip past these to reach the live channels. Both split-view and single-view options will appear as you cycle through.

When using split view with the trailer connected to the 7-way plug and the battery disconnect switch off, one side of the screen will not have an image. To view the backup camera in full screen, press the SEL/PAIR button until the correct channel appears.

⚠ WARNING

Review all manufacturer-provided instructions in your owner’s packet before operating the system to ensure safe and proper use.

Power Awning

Complete operating instructions have been provided with your awning. Make sure your traveling companion is familiar with the operation of the awning.

The awning’s primary function is sun protection. It is not water proof, therefore, roll up your awning in case of rain, wind, or snow.

Clear tape is placed between the exterior skin and the awning fabric to prevent the awning fabric from rubbing on the coating, thus wearing through it. Inspect the tape every year or after a long trip. Have it replaced if it begins to wear thin.

LED light strips have been installed with your awning providing accent lighting. The LED lights are operated by a dimmer switch located just inside the entry door.

Units with power awnings installed have a power awning lock switch located on the awning control panel. When OFF this switch will disconnect the power to the awning. Airstream recommends the awning lock switch be turned OFF while traveling.

NOTICE

The effects of wind and rain on any awning are unpredictable. If wind or extended periods of rain are expected, roll up the awning and secure in traveling position. Severe damage to the trailer and/or the awning may result and cannot be covered by warranty.

If the power to the awning has been turned off or interrupted, the entry door must be closed before retracting the awning. When power is interrupted, the awning controller must reestablish its “home” position by completing a “closed/reset cycle.” This is a normal procedure whenever power to the awning controller is interrupted.

During the close/reset cycle, the awning arms will fully lower before the awning retracts. If the main entry door is left open during this process, the awning’s gas rafter will contact the door, damaging the gas rafter. If you turn off the power to the awning, or if power is lost while it is extended, follow these steps to retract it:

3. Close the entry door, press the retract/close button, and wait for the awning to come to a complete stop. The close/reset cycle is a timed process that prohibits the awning from completely closing, protecting it from damage.
4. Press the extend/open button and when the awning starts to extend, press the retract/close button once to stop the awning.
5. To complete the process, press the retract/close button once again to finish retracting the awning. After the awning has finished closing, the “Close” LED will illuminate. The home position has been restored.

NOTICE

To avoid damaging the entry door, awning, and awning gas rafter after power to the awning has been interrupted, ensure the door is closed before retracting the awning.

Water Service

Gravity Water Fill

The gravity water fill is located on the side of the trailer, behind a locked compartment. It is used to fill the fresh water tank with potable water. A small vent is located next to the port to allow air to expel from the tank as it is filled.

Use a hose that is rated as safe for drinking water (RV-Marine/FDA approved) at least ½-in. diameter, and made from material that is tasteless, odorless, and non-toxic. Many owners fill their tanks at home to avoid unfamiliar water sources, which may be unpleasant in taste or quality.

Run water through the hose briefly to flush out any stagnant water and debris before filling the tank. Open the exterior access door, remove the screw cap, insert the hose, and begin filling. You can monitor the water level using the Monitor Panel, or simply fill until water overflows from the inlet.

Once the tank is full, turn on the water pump. Open the hot side of a galley or lavatory faucet. The faucet will likely sputter as air is pushed through the lines. Then open a cold faucet until you have a steady stream of water. Repeat this process for any remaining faucets or water outlets to fully purge air from the system.

When the system is pressurized and all faucets are closed, the water pump will shut off automatically. It will turn on again anytime a faucet is opened. If a faucet is only partially opened, the pump may cycle on and off rapidly.

City Water Hookup

The city water hook-up is located on the side of the trailer. For consistent water flow and plumbing line safety, an in-line regulator limits pressure to 50 PSI.

Use a tasteless, odorless, and non-toxic high-pressure hose of at least 1/2 in. diameter designed for RV use. The city water inlet is a standard garden hose thread. We suggest you carry two lengths of hose in order to reach hookups farther away than normal, plus, to have a spare.

After hooking up the hose and turning on the city water valve provided in the park, slowly open a faucet. There will be a lot of spurts and sputtering until all the air is expelled from the trailer system. If the water heater is empty, it will take some time before all the air is expelled and a steady flow of water occurs at the faucet. Once a steady flow is achieved at one faucet the others should be opened long enough to expel the air in the lines going to them.

Your plumbing system has a built-in pressure regulator to protect your lines and faucets from extremely high pressures on some city water systems.

Exterior Shower/Sprayer Port

Your Airstream is equipped with a shower sprayer port on the roadside exterior. Push the provided sprayer hose's fitting into the port until the quick-connect engages. To disconnect, press on the quick-connect collar to release the hose.

NOTE

When not in use, ensure the valves are in the off position. Leaving them in the on position may cause cold water to mix with hot, resulting in warm water at interior valves.

Electrical Service

Shoreline Power Inlet and Cordset

Your Airstream is equipped with a SmartPlug power inlet located on the roadside exterior. Prior to establishing a connection, review the SmartPlug Cordset instructions that follow.

Before connecting power to your Airstream, plug the cordset (power cord) into the power source and check the cordset's Power Indicator Light. When the SmartPlug cordset is connected to a power source the LED light on the plug will indicate the following:

- Blue ON - normal power condition. OK to proceed.
- Blue OFF - no power condition. Check Connection and power.

In some older parks and other locations where three-pronged outlets are not available, certain precautions to ensure proper grounding and polarity must be taken. These precautions are listed below:

1. Attach the three-pronged plug to a two-pronged adapter. The third conductor line of this adapter has a short wire lead that must be grounded.
2. For proper grounding, connect the short ground lead to a grounded outlet box or to a cold water pipe. When no water pipe is available, drive a metal rod two feet into the ground and attach the ground lug to it, thus providing the unit with proper grounding.

NOTE

When the three-pronged plug can be used, there will be no problems with proper polarity or grounding with a properly wired shoreline outlet.

NOTICE

When operating with city power, make certain that the service is 120-volt and not 240-volt.

Exterior Outlet

A 120 volt receptacle is located on the curbside of the travel trailer and is labeled for your convenience. The trailer must be plugged into a shoreline power supply for the outlet to operate.

Connectivity

SmartPlug Cable/Satellite and Ethernet Inlet

Connect any external cable TV provider's coax or portable satellite antenna coax and ethernet internet cable to the SmartPlug Cable/Satellite and Ethernet Inlet (located on the roadside exterior near the Smartplug power inlet).

Chassis Features

Axle and Running Gear Assembly

Each rubber torsion axle is aligned during manufacturing, and double-checked on a random basis. Alignment after delivery is the customer's responsibility.

Hitting chuck holes or rough railroad tracks while traveling straight will only cause misalignment after the tire has struck such objects many times. Of course, a deep enough hole can affect the alignment immediately.

The worst culprit is a curb because they are normally struck at an angle. Rear axles are occasionally damaged when people are attempting to park beside a curb while backing up their trailer.

The trailer axle(s) is bent upward in the middle. This bend is normal and is how the camber is obtained. Also, toe-in is built into the axle by very slight bends in the axle tube on each end.

Tire wear indicates misalignment. Check with your dealer for the nearest location with the proper equipment to correct the trailer's alignment.

For Toe-In and Camber Specifications, see Toe-In and Camber Specifications on page 8-8.

Nev-R-Lube Drums/Bearings

Dexter's Nev-R-Lube bearings are comprised of opposed tapered roller bearing cones sealed inside a precision-ground, one-piece, double-cup arrangement. These bearings are designed with a small amount of axial end-play. The end-play is essential to the longevity of the bearing's service life; see Nev-R-Lube Drums/Bearings on page 8-8.

Hitch/Coupler

The EZ-Latch coupler features a simple-to-use latching mechanism. Hooking up is as easy as dropping the coupler on to your hitch ball. Simply make sure that the coupler is properly lined up with the ball, then lower the coupler. The coupler will automatically open and latch into place when lowered onto the hitch ball. To disengage coupler, pull up on latch and raise coupler off of hitch ball. Return the coupler latch to the latched position to ensure that coupler is ready to be latched again. The coupler features a strong composite handle, If the handle does get damaged or becomes missing, the coupler is still completely operational until the handle can be replaced. Replacement parts can be purchased through your Airstream Dealer. See additional information included in your owner's packet.

⚠ WARNING

Always make sure coupler is properly attached and latched before towing.

Power Stabilizing Jacks

The Globetrotter trailer is equipped with power stabilizing jacks. These jacks are controlled by a switch located in the locked utility compartment on the side of the trailer.

NOTE

Power stabilizing jacks automatically adjust to the terrain and should only be lowered until they make contact with the ground.

⚠ WARNING

Stabilizing jacks are designed to stabilize the trailer only. Misuse of the power jacks to level or lift the trailer will result in damage to the jacks and potentially the trailer.

Power Jack

The power jack is operated using the up/down switch on the power head. When the jack is fully extended or retracted, the internal clutch will activate.

- Use the jack for lifting the trailer only.
- Never get beneath the travel trailer when only the power jack supports it.
- Support the vehicle by appropriate means.

⚠ WARNING

Avoid the risk of injury to yourself and others. Keep hands and feet from under the foot plate when using the jack. Do not use or install dolly wheels on the power jack. Do not operate the toggle switch with the manual crank handle in place. Failure to comply could result in serious injury.

NOTE

When operating the power jack, pause briefly between switching up and down. Rapidly switching from up or down may cause the breaker to trip, momentarily interrupting power to the jack.

Power Jack Blade-Style Circuit Breaker

The jack is wired directly to the battery and has an automatically resetting blade-style circuit breaker between the battery and the power head inside the battery box. Should the breaker trip, allow time for it to reset and try operating the jack again. If the breaker does not reset or trips again, the jack may need to be serviced, or the breaker may need to be replaced. Refer to an authorized dealer for service. For maintenance information, see Power Jack on page 8-9.

Manual Operation

Should an electrical failure occur, the jack can be operated manually by unscrewing the bubble level/cap and placing the manual override handle into the alignment tube to engage the drive pin. Rotate the handle counterclockwise to raise or clockwise to lower the trailer.

LP Gas System

Liquid Petroleum Gas (LPG) Supply

Fill Valve

The LPG tanks are equipped with fill valve connections ***RV Type I Acme***. The large, green, nylon swivel nut is a right-hand thread and is designed for hand operation only.

The valve features an internal, spring-loaded module that will not allow gas to flow from the cylinder until a positive seal has been made at the connection. The valve outlet has 1-5/16 in. Acme threads on the outlet exterior, and female POL fitting; left-handed threads on its interior. This feature allows for connection of the new, wrenchless, right-handed, Acme RV connection while still accommodating the standard left-handed POL fittings used for filling propane cylinders.

The mating, green swivel nut and brass nipple also incorporate new features: the green nylon nut swivels on a black bushing that is heat-sensitive. Between 240 and 300°F, the bushing will yield (melt), allowing the spring-loaded module in the valve to push the brass nipple back (approximately 1/4 in.), closing the module and stopping the flow of gas from the cylinder. Inside the brass nipple is a flow-limiting device designed to sense excessive gas flow. If an excessive flow is sensed, the flow-limiting device shuts the flow down to a maximum of 10 SCFH (Standard Cubic Feet per Hour) or less. This is also referred to as the bypass flow.

Bypass flow is extremely important in the proper operation of this connection. The flow-limiting device may activate if the cylinder valve is opened quickly. When all appliances are off, the bypass flow allows the pressure downstream from the flow-limiting device to equalize. When pressure is equalized, the flow-limiting device will supply normal flow to the system. Equalization occurs in approximately 5 seconds and, in most cases, goes completely unnoticed. If, however, an appliance is left on or there is a leak or open flow in the system, the bypass pressure will not be able to equalize and allow the flow-limiting device to re-open.

Symptoms of this condition would be appliances that light but have lower than normal flame or starve out from lack of gas, a substantial reduction in the flame when another appliance is operatingt. If this should happen, the following steps should eliminate the condition:

1. Close LPG cylinder valve.*
2. Extinguish all flames and smoking materials.
3. Be sure all gas appliances are off.*
4. Open LPG cylinder valve slowly. Do not snap open.
5. Wait at least 15 seconds before lighting appliances.
6. If operational difficulties continue, there may be a leak in the system. Immediately close LPG cylinder valve and have system inspected by qualified RV service technician.

*When reconnecting a full cylinder to an auto changeover regulator, it is not necessary to shut off the appliances or close the valve of the cylinder already in service.

⚠ DANGER

Leaking LPG may ignite, causing a fire or explosion, which could result in serious bodily injury, property damage, and/or death.

The amount of time a full tank of gas will last is dependent on usage. In cold weather, when you are using the furnace, large amounts of hot water, and are doing extensive cooking, you will naturally use more than you will in warm weather when you may do limited cooking. On the average, with normal cooking and other appliance use, you can probably count on two to three weeks of service from each tank.

Automatic Gas Regulator

All models are equipped with a two-stage automatic change-over gas regulator that offers the convenience of automatic changeover from empty to full gas cylinders. Both tanks are connected to this regulator.

Make sure there is propane in both tanks before you start. Rotate the white knob on the top-front side of the regulator toward the cylinder you want to use first. This will be the **service** cylinder and the other will be the **reserve** cylinder. Slowly open both cylinder valves. Open both cylinder valves completely, then close about 1/4-turn. This will allow you to easily check to see if valves are open or closed. The indicator on top of the regulator will turn bright green. The indicator will stay bright green as long as there is fuel coming from the service cylinder. When the service cylinder empties, the regulator will automatically draw fuel from the reserve cylinder, providing an uninterrupted fuel flow to the system. When it switches over, the indicator will change from green to red. This red color indicates the service cylinder is empty and needs to be filled.

⚠ DANGER

LPG regulators must always be installed with the diaphragm vent facing down. Regulators that are not located in compartments have been equipped with a protective cover. Make sure the regulator vent faces down and the cover is kept in place to minimize vent blockage, which could result in excessive gas pressure, causing fire or explosion.

LPG Tanks

The following procedure outlines the proper method of removing and installing LPG bottles:

1. Turn the knob on your automatic regulator until the arrow points to the tank opposite the one to be removed. Shut off the gas valve on the tank to be removed.
2. Disconnect the rubber gas line at the tank to be removed. (The green plastic fitting is a right-hand thread and no tools should be used.)
3. Turn the large clamping T-handle counterclockwise until the hold-down bracket is loosened enough to be able to remove the tank. If your trailer is equipped with a gas tank cover, the T-handle must be removed, and then the cover removed before removing the bottle

⚠ WARNING

Do not remove the center hold-down rod.

LPG Tank Installation:

1. Place the tanks in position on the A-frame and tank cross-member so that it rests on the upper collar of both tanks with the collar rims engaged in the grooves on the underside of the bracket. If your trailer is equipped with a tank cover, it should be positioned over the tanks next. Make sure the hold-down rod projects up through the hole in the shroud center bracket.
2. Replace the T-handle and tighten down until the tanks are held firmly in place.
3. Test fittings with liquid soap free of ammonia or chlorine, or products deigned for testing, such as Snoop® liquid leak detector.

If you have allowed both tanks to run out, air may have gotten into the lines. In this event, the air must be forced out through the lines by gas pressure before you will be able to use the appliances.

⚠ WARNING

Your LPG tanks must be filled as directed by the tank manufacturer. Instructions are located on a decal near the fill valve. The decal must not be defaced.

⚠ WARNING

The LPG tanks are securely mounted on the front A-frame of your trailer. If these tanks must be removed for service or replacement, it is important that they be reinstalled correctly in order to prevent any possibility of their falling off or becoming dislodged during travel.

⚠ WARNING

Use only the LPG tanks furnished with your trailer. If replacement is required, it must be a bottle of the same size and design.

⚠ WARNING

Putting a lock on LP tank covers is not recommended because it may limit access to the valve and prevent the ability to shut off LP gas flow in an emergency.

Exterior LPG Port

An exterior LPG port quick-connect is installed on the hitch A-frame of your trailer. An LPG supply line is shipped with the trailer in the loose parts box. This can be used to connect a lantern or other appliance that uses a one-pound, low pressure LPG tank supply to the exterior port.

To assemble, install a male quick-connect coupler to one end of the supply hose. Then add a flare fitting to the other end of the supply hose and install a one-pound tank coupler to the flare fitting. This assembly can be installed into the appliance in place of the one pound LPG tank.

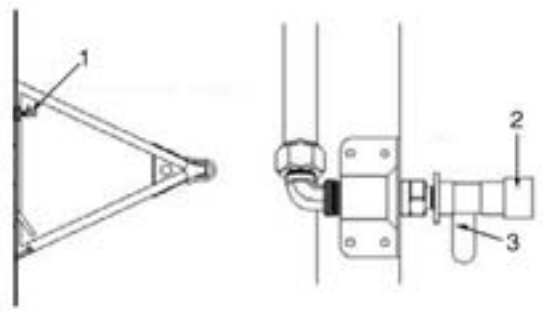

1. Exterior LPG Port
2. Quick-Connect Sleeve
3. Shutoff Lever

Basic Rules For LPG Safety

A warning label is displayed in the cooking area reminding you to provide an adequate supply of fresh air for combustion. The amount of oxygen supply in a trailer is limited due to its compact design. When using the cooking appliances, proper ventilation will prevent dangers of asphyxiation. It is especially important that cooking appliances not be used for comfort heating, as the danger of asphyxiation is greater when the appliance is used for long periods of time.

⚠ DANGER

Do not use cooking appliances for comfort heating. Cooking appliances need fresh air for safe operation. Before operation, open an overhead vent or turn on an exhaust fan and open a window.

⚠ DANGER

A warning label has been located near the LPG container. This label reads: DO NOT FILL CONTAINER(S) TO MORE THAN 80 PERCENT OF CAPACITY. Overfilling the LPG container can result in uncontrolled gas flow, which can cause fire or explosion. A properly filled container will contain approximately 80 percent of its volume as LPG.

⚠ DANGER

Do not store LPG tanks within a vehicle. LPG tanks are equipped with safety devices that vent gas should the pressure become excessive.

⚠ DANGER

Portable fuel burning equipment, including wood and charcoal grills and stoves, shall not be used inside the recreational vehicle. The use of this equipment inside the recreational vehicle may cause fires or asphyxiation.

⚠ DANGER

Do not bring or store LPG tanks, gasoline, or other flammable liquids inside the vehicle because a fire or explosion may result.

Twice a year, or after a long storage period, we suggest you take your trailer in for a checkup and cleaning of the gas-operated appliances.

If You Smell Gas

1. Extinguish any open flames and all smoking materials.
2. Do not touch electrical switches.
3. Shut off the gas supply at the tank valve(s) or gas supply connection.
4. Open doors and other ventilating openings.
5. Leave the area until odor clears.
6. Have the gas system checked and leakage source corrected before using again.

AIRSTREAM®

Section 7
TOWING

TOW VEHICLE 7-2
BRAKES 7-2
Electronic Brake Controller 7-2
Proper Electric Brake Use. 7-2
Breakaway Switch. 7-3
LOADING 7-3
Weighing Your Trailer 7-4
HITCHING UP 7-5
7-Way Plug 7-5
Equalizing Hitch Load Distribution 7-5
Backup Camera 7-5
TOWING 7-6
Safety 7-6
Securing the Door 7-6
Practice 7-6
General Information 7-6
Tracking Observation 7-6
Cooling System Overload 7-6
Downhill and Non-level Driving 7-7
Off-Road Towing 7-7
When Being Passed 7-7
Passing 7-7
Backing Up 7-7
Stopped On a Hill 7-7
Controlling Sway or Fishtailing 7-8
Equipment 7-8
Tongue weight 7-8
Driving 7-8
Corrective Measures 7-8
Sway Control Device 7-8

Tow Vehicle

When buying a new vehicle to tow your trailer, we suggest including towing options offered by most tow vehicle manufacturers. These include such things as a heavy-duty alternator and radiator, heavy-duty springs and shock absorbers, transmission cooler, heavy-duty fan and flasher unit, etc., for the make of the vehicle.

⚠ WARNING

Springs that are too stiff can hinder the action of the weight equalizing hitch and prevent the transfer of weight to the front of the vehicle.

NOTICE

Only use springs heavy enough to support your loaded vehicle (not including trailer). Having a too-harsh spring rate on your tow vehicle will only shorten the life of the tow vehicle and trailer, and will cause your trips to be less enjoyable.

Transmissions may be manual or automatic, but an automatic transmission may prolong your tow vehicle's life and generally does a better job of controlling engine loads than does the average driver using a manual shift.

Having adequate power is very important when considering the purchase of a new vehicle or the trailer-towing capability of your present one. Auto dealers are provided with guidelines to use when helping a customer decide on a tow vehicle. Guidelines are not determined solely by the power output of the engine. The gear ratio of the differential is also a very important part of the guideline.

Inspect the tow vehicle's hitch regularly for loose bolts or nuts, cracked welds, loose ball mounts, worn parts, etc.

New trailerists often carry more food and other supplies than really needed. Remember that every item you take along is one more thing to stow and adds weight to the total load you must pull. Consolidate items in shelves, lockers, and in the refrigerator. It is better to have one full and one empty locker, than two half empty ones. Special care must be taken not to overload the front and rear ends of the trailer.

Brakes

All trailers are equipped with Dexter Nev-R-Adjust brakes. Please follow all maintenance procedures in the Dexter user's manual provided in the owner's packet. For important inspection and maintenance requirements of the components discussed in this section, see Axles and Brakes on page 8-8.

Electronic Brake Controller

The trailer brakes are operated by 12-volt current from your tow vehicle and must be hooked up so that you have an integrated system with your tow vehicle brakes. To prevent problems and ensure satisfactory braking action, install an electronic controller in line with the brakes in your tow vehicle.

An electronic controller will synchronize the trailer brakes with your tow vehicle brakes. It is designed to apply the trailer brakes with your tow vehicle brakes. Your brake controller should be adjusted to provide for a slight lead of the trailer brakes over the tow vehicle brakes.

⚠ WARNING

Study all material provided with your particular brake control. If you do not understand the information, have the installer explain the information to you or call the manufacturer of the controller.

Proper Electric Brake Use

Proper synchronization of tow vehicle to trailer braking can only be accomplished by road testing. Brake lockup, grab, or harshness is quite often due to lack of synchronization between the tow vehicle and the trailer being towed, a too-high threshold voltage (over 2 volts), or under-adjusted brakes.

⚠ WARNING

Never use your tow vehicle or trailer brakes alone to stop the combined load.

⚠ WARNING

The braking system should be checked and serviced by qualified, certified technicians only. Failure to do so could result in loss of control of your vehicle or the trailer, causing damage to property, injury, and/or death.

Breakaway Switch

In the event of an accidental separation of the tow vehicle and the trailer, the breakaway switch will set and lock the trailer brakes for a sufficient length of time to stop the trailer. The switch is activated when the wire attached to it and to the tow vehicle pulls out the small pin in the front of the unit.

When the trailer is connected to the tow vehicle, the breakaway switch loop should be attached to the permanent frame of your hitch. When disconnecting the trailer from the tow vehicle, remove the wire loop from the frame. Do not remove the pin from the switch because this will apply the trailer brakes.

⚠ WARNING

Do not use the breakaway switch as a parking brake. If the battery should go dead, the trailer parking brake would no longer be applied. Failure to comply could cause damage to property, injury, and/or death.

Loading

When towing a trailer, you are subject to new and different challenges on the highway than you may have previously encountered. Towing a trailer is no small responsibility and should be undertaken with great care and safety first in mind. An accident with a tow vehicle and trailer can have much greater consequences than carelessness with a small car. Like an airline pilot who is responsible for expensive equipment and many lives, you should take your responsibilities as a tow vehicle driver very seriously and learn all you can about doing the job safely and well. Balancing the load and preparing the trailer and tow vehicle are critical to safe handling.

One of the most critical aspects of safely towing a trailer is knowing the weights involved and where they are placed. The first thing to determine is how much is being towed and confirming that it is within the capacities of the equipment being used. Determining where the load is placed is critical to the way your rig will handle on the road.

Know what your trailer weighs loaded. Load your trailer including water, propane, etc. and take it to a public scales. Weigh each axle of your vehicle. Refer to your axle weight and tire limits to see if you are within a safe range; see Specifications on page 4-3. Total all axle weights, ensuring you are below the Gross Vehicle Weight Rating (GVWR).

Make sure your load is balanced. Do not load too much on one side. A balanced load is much easier to tow or drive. Front to back balance is also important. Step back and look at your trailer, making sure there is not too much weight on the hitch, or on the rear of the trailer. Secure all items, as loose items can cause damage and become a safety issue. The Cargo Carrying Capacity tag shown below is installed on every trailer and can be found on the inside of the screen door on your trailer.

RECREATIONAL VEHICLE TRAILER CARGO CARRYING CAPACITY
VIN ################
THE WEIGHT OF CARGO SHOULD NEVER EXCEED
XXX kg or XXX lbs
CAUTION
A full load of water equals XXX kg or XXX lbs of cargo @ 1 kg/L (8.3 lb/gal)

Airstream weighs the trailer as finished to arrive at the trailer's weight. That number is subtracted from the GVWR of the trailer and listed under THE WEIGHT OF CARGO SHOULD NEVER EXCEED on the tag. The total weight of any and all cargo, including dealer modifications or additions, water, and propane should never exceed the number listed.

As cargo is added, removed, or shifts in location, the weight on the axle(s) and hitch will change. Also, the hitch and axle weights will change as a consequence of the weight of the LP tank(s) diminishing from use of propane, and/or the transfer of weight as a consequence of water in the fresh water tank being used and transferred to the holding tanks. In shorter units, rear bath models especially, when the LP tanks are empty and fresh water has been transferred to the holding tanks, the reduction in hitch weight may be significant. For this reason, we recommend that the holding tanks be emptied before traveling.

When loading the trailer, keep the following in mind:

- GVWR
- GAWR
- Tire Weight Rating
- Cargo

⚠ WARNING

Never exceed these critical weight limits/ratings. Your safety depends on not overloading the trailer, axles, and tires.

Weighing Your Trailer

The illustration below shows how to weigh the trailer on scales.

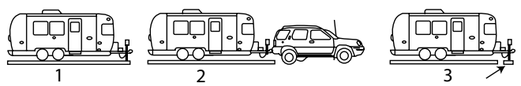

1. Trailer's total weight, cannot exceed GVWR.
2. Trailer's weight on axles cannot exceed GAWR.
3. Weight on trailer tongue.

To determine that the GAWR is not exceeded, it is necessary to load all of your allowable personal cargo and variable weights. Then hitch the trailer to the tow vehicle with load equalizing hitch properly adjusted.

Chock wheels and place the trailer on a scale with both axles only on the scale (see illustration). If the weight on the axles exceeds the axle system's GAWR, then some of the personal cargo must be redistributed forward in order to place some of this weight on the tongue.

The tongue weight should be 10 to 15% of the trailer's total weight, and must not exceed the tow vehicle's or the hitch's maximum weight rating. To determine tongue load, unhitch tow vehicle and place the tongue hitch post on a scale. The trailer must be properly loaded as determined above, with your allowable personal cargo and variable weights.

Use a scale, such as a bathroom scale, that has a lower weight limit than your tongue load to check the tongue weight by using the following method (see illustration).

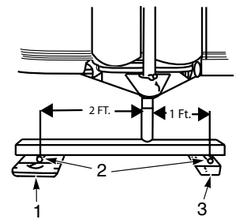

1. Bathroom Scale
2. Pipe
3. Wood Support

Place a piece of wood of approximately the same thickness as the bathroom scale on the ground in line with the trailer hitch jack as shown. It should be so spaced that a short piece of pipe or other round piece will lay exactly one foot from the centerline of the jack extension.

Place the scales so that another round piece can be exactly two feet from the centerline of the jack extension in the other direction. Place a 4x4 piece of wood on the two round pieces and screw the jack extension down on the top of the 4x4 until the tongue of the trailer is supported by it. Multiply the scale reading by three. This will be the tongue weight of your trailer. If you exceed the capacity of the bathroom scale, increase the two-foot dimension to three or four more feet, but always multiply the scale reading by the total number of feet between the wood and scales.

NOTE

Be sure trailer is level when reading scale.

Hitching Up

The process of hitching up your trailer is something that will become almost second nature with practice. The following section includes proper hitch load distribution. Proper training on connecting your trailer to a tow vehicle is essential for safety. Please see your dealer or other qualified personnel for instruction on the proper hitching of your trailer. Safety chain use on the hitch is required in all states.

⚠ WARNING

Always make sure coupler is properly attached and latched before towing, and that safety chains are properly attached. Safety chain use on the hitch is required in all states.

7-Way Plug

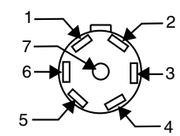

1. Black, 12-Volt (+)
2. Green, Clearance Lights/Taillights
3. Red, Left Turn/Stop
4. White, 12-Volt (-)
5. Blue, Brake
6. Brown, Right Turn/Stop
7. Blank

NOTE

The 7-Way plug is spliced to the main harness in the area of the 12-volt distribution panel in front of the trailer.

Equalizing Hitch Load Distribution

When a trailer is properly hitched up to a tow vehicle with a load equalizing hitch, approximately 1/3 of the trailer's tongue weight will be on the trailer's axles and 2/3 will be transferred to the tow vehicle. One third of this weight transfer will be carried by the front wheels and 1/3 by the rear wheels of the tow vehicle (See illustration). Thus, the tire load of each wheel on the tow vehicle will be increased by 1/6 of the trailer's tongue weight. The tire air pressure of the tow vehicle should be increased to compensate for this additional weight. Refer to the vehicle's owner's manual for this information.

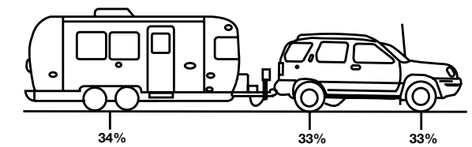

⚠ WARNING

The tongue weight should be approximately 10 to 15% of the trailer's total weight. Under no condition should it exceed the tow vehicles hitch rating. Please refer to the tow vehicles documentation for your vehicles hitch rating information.

Backup Camera

A rearview backup camera is mounted below the awning at the back of the trailer, providing a view behind the trailer. It is powered through the 7-way connection when the tow vehicle's running lights are on. For additional details and operation of the over-the-door camera and monitor; see Wireless Observation System on page 6-4.

⚠ WARNING

Review all manufacturer-provided instructions in your owner's packet before operating the system to ensure safe and proper use.

Towing

Safety

The transporting of people in the trailer puts their lives at risk and may be illegal. The trailer does not have seat belts, therefore, it is not designed to carry passengers.

⚠ WARNING

Never transport passengers inside a trailer. Towing a trailer with passengers inside is unsafe and could result in death or serious injury.

Securing the Door

Before towing your travel trailer, secure the main door by locking both the door handle and deadbolt from the exterior using the keys. For instructions on how to properly lock the door, see Main Door on page 6-3.

⚠ WARNING

BEFORE TOWING

The door handle and deadbolt must both be locked from the exterior using the keys. Never lock them before shutting the door. Failure to fully lock both the handle and deadbolt using the keys may result in the door vibrating open during travel.

Practice

We want every Airstream owner to be a safe and courteous driver. A few hours of towing practice in a large, empty parking lot will make pulling your trailer over the road much easier. Mark off two corners of the parking lot for left and right turns. These corners may also be used to practice backing and parking.

General Information

After thoroughly inspecting your hitch, brakes, and tires, you should be ready to tow. Check traffic, signal when you are about to pull away, and start slowly. Look often in your mirrors, and observe the action of the trailer, then carefully move into the proper lane of traffic. Remember that the trailer wheels will not follow the path of the tow vehicle wheels, therefore, wider turns are necessary when turning to the left or to the right.

⚠ WARNING

Truck or trailer type fender, door grip, and rear view mirrors are a must for maximum visibility and required by law in most states.

Tracking Observation

Observe that the tracks made by the trailer wheels are distinctly different from those made by the tow vehicle. Studying this will make it easier for you to correct mistakes.

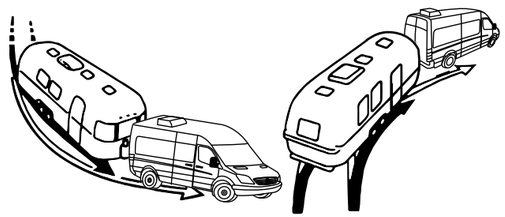

Cooling System Overload

When towing, you might encounter a temporary cooling system overload during severe conditions, such as:

- Hot days when pulling on a long grade
- When slowing down after higher speed driving
- Driving with long, idle periods in traffic jams

If the tow vehicle's temperature gauge or indicator light indicates overheating, and the air conditioner is on, turn it off, pull over in a safe place, and apply the emergency brake. Increase the engine idle speed. Lift the engine hood and check for fluid leaks at the radiator overflow outlet. Ensure all drive belts are intact and the radiator fan is turning. If you have a problem, have it fixed at the next opportunity. If there is no problem, the light should go off or temperature should come down within 1 minute. Proceed on the highway a little slower, and resume normal driving after 10 minutes.

⚠ WARNING

Never open a radiator cap when the tow vehicle is hot. Check the coolant level when the vehicle is cool.

Downhill and Non-level Driving

When going downhill in dry weather, downshift so that engine compression will slow the whole rig down. Take dips and depressions in the road slowly and do not resume normal driving speeds until you are sure that the trailer wheels are clear of the dip.

⚠ WARNING

On slippery pavement, do not use engine drag to help slow down as this may cause the rear wheels of the tow vehicle to skid. On icy pavement, drive slowly and, if you feel the tow vehicle skidding, gently apply the trailer brakes only. This will bring the tow vehicle and trailer back into a single line. Chains do not help trailer wheels.

Off-Road Towing

When driving in mud and sand, let the momentum carry the rig through. Apply power gently and use as little as possible. Stay in the tracks of the vehicle ahead and keep the tow vehicle in the highest possible gear. If you get stuck, it is best to tow the entire rig together without unhitching.

When Being Passed

Despite the best hitch, you will notice that whenever a large bus or truck overtakes your rig, the displaced air first pushes the trailer rear slightly to the right and then affects the front. It may be necessary to steer very slightly, momentarily, toward the bus or truck to help compensate for the sway induced by the passing vehicle. Do not apply the vehicle brakes, as this can tend to exaggerate the situation. You may find, however, that briefly applying the trailer brakes with your manual control will help eliminate sway.

On a two-lane road, cars may line up behind you because you travel at a lower speed. It is both courteous and sensible, if you are able, to signal, pull onto the shoulder, and let them pass. Your trailer is designed to be towed easily at any legal speed, so if you are not careful, you may be inclined to forget it is there.

Passing

On freeways or expressways, pick the lane you want and try to stay in it. Always maintain plenty of space between you and the car ahead, at least the length of the tow vehicle plus trailer, for every 10 miles per hour. Remember that in order to pass another vehicle, you will need longer to accelerate. You must also allow for the length of the trailer when returning to the right hand lane.

Backing Up

When backing up, the important thing to remember is to do everything slowly and to immediately correct if you see the trailer turning the wrong way. Concentrate on the rear of the trailer. With your tow vehicle and trailer in a straight line, back up slowly and turn the bottom of the steering wheel in the direction you want the trailer to go. Watch out of the window or in the mirror until the rear of the trailer is pointing in the desired direction. Your tow vehicle will be following the trailer in an arc. Straighten the tow vehicle and trailer by turning the steering wheel more sharply, and then, when they are in line, straighten the steering wheel.

Always try to back to your left because the visibility is much better. When you don't make it on the first try, it is usually much easier to pull forward to your original position and start over, or at least pull forward until the rig is straight, and then start backing.

If your spouse or traveling companion normally directs you when backing, they should position themselves forward of the tow vehicle so the driver can easily see them. Their directions should always indicate to the driver the direction the rear of the trailer should go. A little practice in a parking lot with the person giving directions can save a lot of frustration when backing into a campsite.

Stopped On a Hill

Refer to the following warning if stopped on a hill for a prolonged period of time.

⚠ WARNING

Chock the trailer wheels when stopping on a hill or slope. Leaving your tow vehicle in gear is not enough for standstill safety. Do not use trailer brakes as parking brakes.

Controlling Sway or Fishtailing

Sway or fishtailing is the sideways action of a trailer caused by external forces. It is common for travel trailers to sway in response to strong winds, crosswinds, when passed by or passing a semi-tractor and trailer, or driving downhill.

⚠ WARNING

Excessive sway or fishtailing of your travel trailer can lead to the rollover of the trailer and tow vehicle. Serious injury or death can occur. It is important that you read and understand the information in this section.

Sway or fishtailing of your recreation vehicle can be controlled and is primarily impacted by four factors:

- Equipment
- Tongue Weight
- Driving
- Corrective Measures

Equipment

When hitched together, the trailer and the tow vehicle must be level. The tires of both the trailer and tow vehicle should be in good condition and properly inflated to their recommended pressures.

Braking is a very important factor in vehicle control; see Brakes on page 7-2 and see Electronic Brake Controller on page 7-2.

We recommend a friction sway damper or hitch with built-in sway control be provided. Please consult your dealer regarding this equipment. For more information, see Sway Control Device on page 7-8.

Tongue weight

For more information about tongue weight, see Weighing Your Trailer on page 7-4 and see Equalizing Hitch Load Distribution on page 7-5.

Driving

This is the most important component. The tendency for the vehicle to sway increases with speed therefore, obey all speed limits and reduce speed during inclement weather or windy conditions.

Corrective Measures

If sway occurs, the following techniques should be used:

1. Slow down immediately and remove your foot from the accelerator. Avoid using the tow vehicle brakes unless there is a danger of collision. Reduce speed gradually whenever possible. If you can do so safely, use the brake hand controller to gently and progressively apply the trailer brakes. This will help to keep the vehicles aligned. Practice using the brake hand controller on a deserted parking lot. Do not wait until an emergency occurs before using it. Location of the brake hand controller is important and should be made easily accessible.
2. Steer as little as possible while maintaining control of the vehicle. Because of natural reaction lag time, quick steering movements to counter trailer sway will actually cause increased sway and loss of control. Keep both hands on the wheel. Hold the wheel as straight as possible until stability is regained.
3. Do not jam on the brakes or attempt to press on the accelerator to speed your way out of the fishtailing. Both actions make the situation worse and could cause severe injury or death.
4. Once the swaying is under control, stop as soon as possible. Check tire pressures, cargo weight distribution, and look for any signs of mechanical failure. Travel at reduced speeds that permit full control until the problem can be identified and corrected.

Sway Control Device

Although Airstream has not intruded into the hitch manufacturer's field of expertise and performed formal testing, we find the vast majority of Airstream owners purchase sway-control devices.

When passed by large trucks or when exposed to sudden crosswinds, the trailer will be pushed and this action will be felt in the tow vehicle. It is our understanding that the sway control device will reduce the amount of movement, make towing more comfortable, and add some safety. Follow the directions of the sway control manufacturer when having the device installed and when using it.

AIRSTREAM®

Section 8
MAINTENANCE

MAINTENANCE SCHEDULE 8-2
AIRSTREAM SERVICE AND PARTS 8-3
TIRES 8-3
Tire Changing 8-3
Jack Location 8-3
Tire Load and Inflation Information 8-4
Proper Tire Inflation 8-4
Underinflated Tires 8-4
How Overloading Affects Your Tires . . . 8-4
Weighing Your Trailer Or Towed Vehicle . 8-4
Tire Care 8-5
Tire Care Tips 8-5
Tire Inspection and Storage 8-5
Tire and Wheel Replacement 8-6
Choosing a Tire 8-6
Max Load Single vs. Max Load Dual . . . 8-6
Lug Nut Torquing 8-7
Spare Tire Carrier 8-7
Tire Rotation 8-7
AXLES AND BRAKES 8-8
Axles and Bearings 8-8
Rubber Torsion Axle Alignment Specifications 8-8
Nev-R-Lube Drums/Bearings 8-8
Nev-R-Lube Bearing Inspection 8-8
Brakes 8-9
Breakaway Switch. 8-9
POWER JACK. 8-9
Power Jack Maintenance 8-9
WATER PUMP. 8-10
Water Pump Access Locations 8-10
Strainer Cleaning 8-10
FRESH WATER SYSTEM 8-10
Drain Valves 8-10
Drain Valve Locations 8-11
Fresh Water Tank Draining 8-11
Sanitizing 8-11
DRAIN AND WASTE SYSTEM 8-12
Emptying the Holding Tanks 8-12
Extended Stays. 8-13
Waste Tank Flush 8-13
Drain System Cleaning 8-13
WINTERIZING AND STORAGE 8-14
Winterization Procedure 8-14
Restoring Service After Winter 8-15
MAIN DOOR CARE. 8-16
Lubrication 8-16
Adjustment 8-16
WINDOWS 8-16
Sticking Windows 8-16
ELECTRICAL DIAGRAMS 8-17
FRESH WATER LAYOUTS 8-32
FAQS AND ANSWERS 8-35

Maintenance Schedule

⚠ WARNING

Failure to maintain your trailer can cause premature and unexpected parts breakage and/or erratic operation that may be hazardous.

NOTICE

See appliance manufacturer's literature for further information.

Every 1,000 miles or 60 days	
Escape Window	Check operation of latches and upper hinge.
Battery*	Check water level, lead acid only.
Smoke Alarm & CO Detector	Test and replace battery as required.
Tires	Check tire pressure; see Specifications on page 4-3.
Hitch	Check for loose bolts or unusual wear.
GFI Circuit Breaker	Test and record.

* As a battery ages and becomes less efficient, the water level should be checked more often and replenished only with distilled water.

Every 5,000 miles or 90 days	
Main Door Latch	Lubricate with dry graphite
Exterior Door Locks	Lubricate with dry graphite.
Exterior Hinges	Lubricate with light household oil.
LPG Hold-Down	Lubricate with light household oil.
LPG Regulator	Check bottom vent for obstructions.
Wheel Lug Nuts	Torque to specifications; see Specifications on page 4-3.
Breakaway Switch	Pull pin and lubricate with household oil; see Breakaway Switch on page 8-9
7-Way Plug	Spray with contact cleaner.

Every 5,000 miles or 90 days	
Hitch Ball	Lubricate with hitch ball lube or wheel bearing grease.
Range Exhaust Hood	Clean fan blades and wash filter.
Main Door Step	Lubricate and inspect moving parts.

Every 10,000 miles or 6 months	
Tires	Inspect and rotate.
Nev-R-Lube	Visually inspect wheel bearings at tire rotation. Refer to Dexter's recommendation www.dexteraxle.com or call (574) 295-7888.
Spare Tire Carrier	Lubricate moving parts.
Windows and Door Seals	Clean with mild detergent and apply 303 Aerospace Protectant.
Exterior	Wax.
Escape Window	Lubricate latches with silicone grease every 6 months or as needed.

Every 12,000 miles or every year	
Brakes	Inspect or replace as necessary every year or 12,000 miles; see Brakes on page 8-8
Battery	Clean, neutralize, and coat terminals with petroleum jelly.
LPG Tanks	Have purged by LPG supplier every year.
Seams	Check and reseal exterior seams, windows, lights, and vents as needed.
Hitch Coupler and Ball	Ensure all parts operate freely. Replace any component if worn or damaged.
Interior Cabinetry	Visually inspect catches, hinges, latches, and slides. Spray with silicone spray if needed.
Power Jack	Inspect and lubricate; see Power Jack on page 8-9

Airstream Service and Parts

Please contact an Airstream dealer service center to schedule maintenance and obtain replacement parts; see Service on page 3-5.

NOTE

Availability of parts and service may vary. Some parts may occasionally be delayed, back-ordered, or replaced with compatible alternatives.

Replacement parts for dealer service and repair and common items such as filters and hardware can be found in the parts book specific to your Airstream model.

Airstream parts books are posted on our website as soon as they're finalized, typically around the midpoint of model year production. Scan this QR code or visit https://www.airstream.com and navigate to the owner's section to locate the parts book for your model Airstream.

Airstream Supply Company is your trusted source for Airstream-approved cleaners, polishes, and other care products and supplies needed to properly maintain your Airstream's interior and exterior. Scan this QR code to visit and explore our assortment of RV care products and camping supplies at https://airstreamsupplycompany.com.

Tires

Your trailer is equipped at the factory with name brand trailer tires. Most Airstream dealers cannot make adjustments to tires. An Airstream or tire dealer that handles that particular brand must do this. If you experience tire problems, contact the nearest dealer.

Tire Changing

To change a tire with a jack, see the label affixed to the underbelly located to the rear of the wheels. This label reads **JACK** with an arrow pointing to a plate riveted to the mainframe rail where the jack head must be placed.

Jack Location

Airstream does not supply a jack with the trailer. The Jack location is under the trailer and marked as shown in the photo.

Leveling blocks can be used instead of a jack to change a flat tire. Position the leveling block under the trailer's good tire. This will raise the flat tire clear of the ground. All tire and wheel assemblies are balanced at the factory. Be sure to rebalance the tire and wheel assemblies each time a tire is changed.

⚠ WARNING

Do not exceed the maximum speed rating of the tires installed on your trailer. Failure to heed this warning could cause catastrophic tire failure resulting in property damage, personal injury, and/or death. Refer to the Tire Safety Information Addendum in your Owner's packet for more information.

⚠ WARNING

Never attempt to change any tire on the trailer without securely chocking the trailer's remaining wheels. Never position yourself in a manner where a raised trailer can come down on you if it should become dislodged from a jack or ramp.

⚠ WARNING

When removing aluminum-forged wheels from spindle, it is very important to mark them to ensure the wheel is placed in the same position of the drum when reinstalling. If the aluminum-forged wheel is to be mounted on a different drum, it is important to sand all loose corrosion from the mating surfaces.

⚠ WARNING

WHEEL SEPARATION CAN OCCUR:

1. **When removing/reinstalling wheels: torque lug nuts at the beginning of the first trip, and at 5, 25, and 50 miles.**
2. **Thereafter, check lug nuts before each trip.**
3. **Following winter storage, check lug nuts before beginning a trip**
4. **Following excessive braking, inspect and torque.**

⚠ WARNING

Use a torque wrench to tighten lug nuts. Tightening by hand or with an impact wrench is not recommended. For lug nut torque values, see Specifications on page 4-3.

Tire Load and Inflation Information

Maintaining proper tire inflation pressure is essential for both tire safety and performance. In an emergency, remove a flat tire. The independent suspension of the rubber torsion axle allows four- or six-wheeled units to be safely towed on three or five wheels for a short distance (100 miles maximum) and only at a low speed (30 MPH).

Be especially careful when crossing holes or dips in the road. Under these circumstances, it is good practice to set your rear view mirrors so that you can observe your tires at all time.

Proper Tire Inflation

The level of air in your tires affects your vehicle's overall performance. A maximum inflation pressure specification is found on the trailer's exterior on a metal tag riveted to the lower front, roadside of the trailer, as well as on the original equipment tires.

Air pressure should be checked based on the load on each individual tire. Cold Inflation Pressure should be adjusted to handle the maximum tire load, and all tires on the axle should carry the same inflation pressure. *Cold tire inflation pressure* is the tire pressure checked in the morning before you drive more than a few miles, or before rising ambient temperatures or the sun's radiant heat affects it.

Underinflated Tires

Underinflation brings a higher risk of damage due to road hazards, reduces casing durability, causes a loss in fuel economy, and will result in uneven or irregular tire wear. Severe underinflation brings about an increased risk of tread separation, handling difficulties, and possible tire failure, caused by overheating.

When minimum inflation pressure requirements are not met, tire durability and optimum operating conditions are compromised. Tire inflation pressure should always meet the guidelines for vehicle weight.

Observe the following:

- It may be necessary to inflate your tires at a truck stop or truck service center in order to achieve adequate air pressure for your trailer's needs.
- Only permanent air seal metal valve caps should be used.
- Be safe - if a tire has been run in a 20% underinflated condition, it must be dismounted and inspected by a trained professional. It should not be aired up without a full inspection or without using a safety cage. Use a calibrated gauge. If your tire is rated for higher inflation pressures, a special gauge will be required designed for larger tires.

⚠ WARNING

Due to RISK OF EXPLOSION damaged tires or tires run with more than a 20% underinflation (approximate) must be dismounted, inspected by a qualified technician, and should not be inflated without using a safety cage.

- Do not bleed air from warm tires to reduce pressure buildup.
- Do not inflate tires to cold PSI rating beyond rim specifications.

How Overloading Affects Your Tires

Tire pressure is what enables your trailer tire to support loads, overloading can have serious consequences. Too much weight can cause stress on the suspension system components, brake failure, handling and steering problems, irregular tire wear, and possible tire failure. If you discover your tires cannot handle the load, lighten the weight of the load on your tires.

Weighing Your Trailer Or Towed Vehicle

Since a trailer or towed vehicle adds to the load on the tires, it is crucial to properly weigh towed vehicles; see Loading on page 7-3 and see Weighing Your Trailer on page 7-4.

Tire Care

The most important function of tires is to provide traction while moving and grip when steering or stopping. The tires on your trailer are designed for highway use and must be properly maintained in order to maximize tire life, as well to provide a safe mode of transportation.

Tire Care Tips

To reduce the risk of tire failure, we strongly recommend the following:

1. Check the pressure in your tires, including your spare, at least monthly when the tires are cool (after the vehicle has been stopped for 3 hours and then driven less than 1 mile). Do not reduce pressure when tires are hot. Use a tire gauge to check pressure and maintain it at the recommended level.
2. Never overload your tires. Heed the maximum load-carrying capability of your tires.
3. Check your tires frequently for scrapes, bulges, separations, cuts, or snags resulting from use. See your tire dealer immediately if any such condition is discovered.
4. Never operate your vehicle in excess of lawful speeds, the maximum speeds justified by driving conditions, or in excess of speeds recommended for the tires you are using.
5. Make every effort to avoid running over objects that may damage the tire through impact or cutting, such as chuck holes, glass, metal, etc.
6. Never drive on smooth tires. Tires should be removed when 2/32 in. of tread depth remains. In most states, it is illegal to drive with less than 2/32 in. remaining tread depth.
7. Park out of the sun whenever possible when in warm climates. In desert regions, use tire covers to prevent ultra violet light deterioration to tires.

Tire Inspection and Storage

Before taking your trailer on a trip or when removing it from an extended storage period, make it a practice to inspect the overall condition of your tires. Check for any type of condition or damage that might result in failure. A thorough check should include both inside and outside sidewalls, tread area, and the condition of hardware such as valve stems, valve caps, and wheels. The tread should be checked for any unusual wear, cracking, penetrations, and/or cuts. An uneven wear pattern can indicate misalignment or worn suspension parts.

Since many RVs are used seasonally and sometimes stored for extended times, it is possible that tires will take many years to wear out. Tires, as any rubber product, will age over time. If tires show cracking in the sidewall or tread surfaces that are more than 2/32-in. deep, they should be replaced before your next trip or vacation. Store your RV in a cool, dry area away from major heat sources and extreme cold. An enclosed storage area is best with no exposure to electromagnetic sources such as generators or transformers. If you must keep your trailer outside, cover your tires from direct sunlight. Take your trailer to your tire dealer for service to check or correct any of these conditions.

Tire and Wheel Replacement

It is possible to replace your tires with a different size, in some instances. If there is a reason to replace your tires with a different size, make sure the following checks are made before the purchase:

- Does the replacement tire have the load capacity that is needed for my trailer and will it fit properly inside the wheel well?
- Will the overall diameter difference affect the braking system?
- Is the increase in air pressure compatible with the maximum rated pressure stamped on the rim?

Most trailers are towed at or near maximum loads during hot weather and then are left idle for months. In normal use, oils in the tire come to the surface during flexing and protect the rubber from ultraviolet light. But, when the trailer tires sit idle too long, natural aging may cause the rubber to crack prematurely, especially in the sidewall area. Trailer tires over 5 years old should be inspected by a tire expert for cracking and replaced even if it has no apparent tread wear.

Choosing a Tire

Every tire sold in the United States has a tire rating stamped on the sidewall that shows a tire's maximum load at a defined pressure. Use the example above to help locate the max load rating in pounds (lbs) and tire pressure in pounds per square inch (psi) on your original equipment tires. Choose a tire with equal load ratings. For tire size, inflation and load specifications, see Specifications on page 4-3.

Max Load Single vs. Max Load Dual

Max Load Single refers to the tire rating for applications with only one wheel on each end of a single axle. *Max Load Dual* refers to the tire rating for dually wheels, where there are two wheels on each end of an axle for a total of 4 wheels on a single axle.

Don't confuse the terms Single and Dual with Tandem. A tandem axle refers to trailers with two axles, one behind the other.

For Airstream Travel Trailers, refer to the Max Load Single rating.

⚠ WARNING

Do not mismatch wheels and tires.

Axle systems are installed with hubs and drums that are compatible with many wheels used in the recreational vehicle industry that have matching bolt patterns. If the original manufacturer-installed equipment is in need of replacement, the wheel manufacturer should be contacted for proof of compatibility prior to replacement and use.

Customers replacing original with equipment that has not been tested for compatibility must ensure the replacements are compatible to the hub and drum assembly installed. Such elements of compatibility include, but are not limited to:

- Diameter of the hub-mounting surface.
- Stud length and diameter.
- Location and number of studs.
- Center hole diameter for the wheel.
- Wheel-mounting offset from the rim center.
- Rated capacity of the wheel.
- Wheel fastener torque.
- Wheel nut size and shape.
- Impact of any added wheel accessories (such as decorative center caps) that could affect proper seating of the wheel to the hub surface.

Refer to the following table for wheel specifications.

Wheel Specifications		
Size/Center Size In Inches	Lug Pattern	Model
15 x 6 / 5.5	6	All Models
All wheels have zero offset.		

Lug Nut Torquing

Trailer wheels must carry much higher loads per wheel than passenger car or truck wheels. Each wheel may carry 1000 pounds and higher. Furthermore, wheels on tandem axle trailers do not steer, and are subjected to very high side load stress whenever the trailer makes a tight turn. When going around corners, especially on slow, tight turns, the wheels are subject to very strong side loads. This tends to flex the wheel and gradually loosen the wheel nuts. Although the materials and manufacturing methods are maximized for this kind of service, these extra loads can cause stress, which can result in flexing and loosening of wheel nuts.

Before each trip and any time a wheel is replaced, be sure to tighten the wheel nuts, following the lug-pattern sequence shown below. If the wheel was replaced, check the torque every 5, 25, and 50 miles.

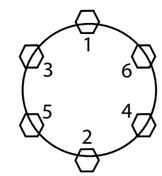

If you notice wheel wobbling, or hear a rattling sound coming from a wheel, especially at low speeds, a wheel lug nut may have come loose. This problem is usually caused by improper tightening, or by faulty or damaged lug bolt threads.

If suspicious of a loose lug nut, safely stop vehicle as soon as possible. Put up warning devices and check the tightness of all the lug nuts. Tighten all lug nuts to the specified torque, using a torque wrench. If stud threads are damaged or faulty, get professional service help.

⚠ WARNING

Use a torque wrench to tighten lug nuts. Tightening by hand or with an impact wrench is not recommended. For lug nut torque values, see Specifications on page 4-3.

Spare Tire Carrier

The spare tire for Airstreams is stored under the front of the trailer. The front handle of the tire carrier is a 1-in. tube protruding from under the front A-frame on the curbside. It is secured by a bracket and bolt along the inside of the A-frame rail. Removing the bolts allows the front of the tire carrier to be lowered and the spare tire to be removed.

⚠ WARNING

The spare tire carrier is designed to carry an undamaged tire and rim assembly of the type and size specified for the trailer. Never place a severely damaged wheel assembly with a damaged partial tire, or a rim only, in the carrier.

Tire Rotation

(10,000-mile intervals)

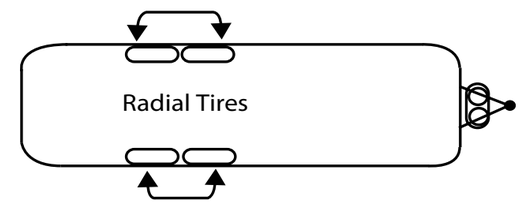

Axles and Brakes

The following sections provide an overview of the inspection and maintenance requirements of the axle and brake components, as well as requirements for the breakaway switch. Consult the Dexter Operation Maintenance and Service Manual for detailed axle and brake information, and required maintenance intervals. It can be found by scanning the QR code above or visiting https://www.dexteraxle.com/.

⚠ WARNING

Read and follow all warnings and cautions and adhere to all required maintenance intervals found in the axle and brake component manufacturer's manual. Failure to properly maintain these components could lead to an accident, resulting in serious injury or death.

Axles and Bearings

⚠ WARNING

Never apply heat to the axle tube because the rubber providing the spring torsion action will be severely damaged.

Rubber Torsion Axle Alignment Specifications

Toe-In and Camber Specifications	
Toe-In each side 1/16 in.	Tolerance 1/8 in. + or -
Camber each side 3/4 degrees positive	Tolerance 3/4 degrees + or -

Nev-R-Lube Drums/Bearings

Dexter's Nev-R-Lube bearings are comprised of opposed tapered roller bearing cones sealed inside of a precision ground, one-piece double cup arrangement. These bearings are designed with a small amount of axial end-play. The end-play is essential to the longevity of the bearings service life.

Nev-R-Lube Bearing Inspection

1. Jack the trailer at the marked **JACK** location pad behind the axle on the main frame.
2. Check for excessive wheel end-clearance by pulling the tire assembly toward you and pushing the assembly away from you. Slight end-play is acceptable (0.001 to 0.010 in.).
3. Rotate the tire slowly forward and backward. The wheel assembly should turn freely and smoothly.
4. Excessive wheel end-play, restriction to rotation, noise, or bumpy rotation should be remedied by replacing the bearing unit.
5. Bearing units should be inspected when tires are rotated, or at least every year or 12,000 mi., whichever comes first.

A slight amount of grease-weeping from the seal area is normal. Excessive leakage may indicate abnormal bearing operation. See the Dexter Operation Maintenance and Service Manual for bearing end-play inspection, drum removal/installation, and bearing replacement procedures.

NOTICE

Airstream recommends that a qualified Dexter service technician perform these procedures due to the need for specialized tools and training.

Brakes

Brakes must be inspected and serviced immediately if performance loss is indicated. With normal use, servicing at 12-month or 12,000-mile intervals is usually adequate (whichever occurs first). With increased usage, this work should be done more frequently as required.

Breakaway Switch

1. Pin
2. Breakaway Switch

To prevent corrosion within the breakaway switch, pull the pin out and spray the inside of the switch through the hole with an electric contact cleaner (such as Spra-Kleen). Applying a drop of light household oil on the pin and the groove near the base of the pin will allow the pin to operate freely. Immediately reinsert the pin. Perform this procedure every 90 days.

⚠ WARNING

Allow no more than 20 to 30 seconds pin separation, as damage to brake magnets may occur.

Power Jack

The power jack manufacturer's owner's instructions and parts list can be found by scanning this QR code and navigating to the instructions on Barker's website at https://www.barkermfg.com/. The following are basic maintenance requirements. Please refer to Barker's instructions for jack and bubble level adjustments, installation, and additional maintenance.

Power Jack Maintenance

- Once a year, the powerhead should be removed, and a liberal amount of grease (preferably grease with a high melting point) applied directly to the coupling on which the drive pin rests. Do not pour oil into the top of the jack post.
- Once a year, the housing cover should be removed and the gears inspected for proper lubrication. Remove all four screws and tap around the edge of the housing to free the cover. Do not use or insert a screwdriver blade to remove the cover, as it may damage mating surfaces. If lubrication is needed, use Mobilith SHC™ 460 or equivalent. Clean the mating surfaces before replacing the cover.

⚠ WARNING

Avoid the risk of injury to yourself and others. Keep hands and feet from under the foot plate when using the jack. Do not use or install dolly wheels on the power jack. Do not operate the toggle switch with the manual crank handle in place. Failure to comply could result in serious injury.

NOTE

When operating the power jack, pause briefly between switching up and down. Rapidly switching from up or down may cause the breaker to trip, momentarily interrupting power to the jack.

Water Pump

Water Pump Access Locations

In 25FB, 27FB, and 30RB models, the water pump and strainer are located under the wardrobe. The bottom cabinet panels swing open for access and/or the bottom shelf of the wardrobe can be removed on certain models.

Strainer Cleaning

Locate the strainer housing (on the water line leading to the water pump inlet). Remove the transparent bowl (turn counterclockwise), and carefully pull out the strainer/screen. Clean and rinse with water (use a household detergent if necessary). Reinstall the strainer and bowl, being careful not to damage the seal. The bowl collects sediment and should be positioned under the housing as depicted above. Check for leaks prior to resuming normal operation.

Fresh Water System

Drain Valves

Drain valve locations are listed below on the next page by model; see Drain Valve Locations on page 8-11. However, it may be helpful to know how to locate them should this information become outdated due to a change mid-production.

To locate internal low-point drain valves:

1. Look for a water line (usually white, red, or blue) protruding from the exterior underbelly. It will be a bare line with no valve. There may be two or more.
2. Establish a reference point to something inside the trailer, such as a window or vent.
3. Once inside, use your reference point to locate where the water line comes out of the floor. Trace the water line to the nearby low-point drain valve connection.

You can find where water lines come through the floor and locate valves by removing access panels inside or under furniture near your reference point; others are accessible by removing a drawer or opening a cabinet/compartment door. Sometimes access to internal valves is gained externally from inside a storage compartment.

To locate external fresh water tank valve(s), look for a stainless steel valve (right photo) or in-line brass valve(s) (left photo) mounted to the galvanized steel underbelly.

For more information on the plumbing layout, see Fresh Water Layouts on page 8-32.

Drain Valve Locations

The 25FB model has an interior water line low-point drain valve accessible from inside the curbside-exterior storage compartment near the water heater and a set of brass low-point drain valves (above left) on the exterior tank pan under the trailer, roadside, and between the wheels. A separate stainless steel valve (above right), used to drain the fresh water tank, is located roadside between the wheels.

The 27FB model has an interior water line low-point drain valve under the lavy sink, which can be accessed by opening the hinged bottom cabinet panel. It also has a set of brass low-point drain valves (above left) on the exterior tank pan under the trailer, roadside, and between the wheels. A separate stainless steel valve (above right), used to drain the fresh water tank, is located roadside between the wheels.

The 30RB model has two interior low-point drain valves. You can access them by removing the panel under the rear dinette seat cushion and then removing the vertical panel near the floor at the back of the seat. Use the finger holes to pull the panel and release it from the springloaded catches holding it in place. The valves are under the floor directly in front of the water heater. A separate stainless steel valve (above right), used to drain the fresh water tank, is located roadside between the wheels.

Fresh Water Tank Draining

Pumping the water out with the self-contained water pump can empty the fresh water tank. Simply turn on the pump switch and open a couple of faucets until the water will no longer drain out, or use the stainless steel valve and/or brass drain valve(s) located on the fresh water tank pan. Be sure to watch closely and turn the pump off when the tank runs dry.

NOTICE

Do not let the pump run dry for extended periods of time as this could damage the pump.

Sanitizing

Airstream recommends sanitizing the fresh water system before and after storage, after installing new components, and whenever contamination is suspected. How often to sanitize—and what solution to use—depends on how frequently your Airstream is used, the taste and quality of the water, and the environments it has been exposed to, such as extreme heat, high humidity, or questionable water sources.

Use a sanitizer that effectively disinfects without damaging system components. While bleach is widely used for its ability to kill bacteria, viruses, fungi, and some protozoa, it can also corrode metal and degrade seals. In some configurations, susceptible components like the water heater cannot be bypassed, meaning the solution will circulate through the entire system. To avoid damage, Airstream generally recommends using an RV-specific fresh water system cleaner formulated to be safe for all fresh water system components. Follow the product's instructions for dilution and contact time.

If contamination is severe, bleach may be necessary. Refer to your water heater's manual for additional information. If bleach is not recommended, bypass the water heater whenever possible, and flush the system thoroughly when finished. Use the standard sanitization formula: 0.13 ounces of household bleach per gallon of water, or 1 milliliter per liter. This produces a 50 ppm free chlorine solution, consistent with RVIA ANSI A119.2 and widely accepted potable water disinfection practices.

Refer to the sanitization procedure that follows to introduce the solution into the system:

1. Determine the amount of solution you need for your fresh water tank's capacity; see Specifications on page 4-3.
2. Pour a one gallon concentrate into the fresh water tank. Immediately fill the tank using a city water connection to dilute the concentrate to the proper sanitization ratio.
3. Open all faucets (hot and cold) allowing the water to run until the distinct odor of chlorine is detected.
4. Leave the solution in for the product's recommended contact time (4 hours for bleach). Drain the tank, refill from the city water connection, and drain again. Repeat until the solution is flushed out.

Drain and Waste System

Your Airstream's drain and waste system includes holding tanks made from corrosion-free molded plastic. For additional detail, see Drain and Waste System on page 5-8 . All tanks are emptied through a dump valve equipped with "T" handles, allowing you to individually open and drain each tank through a shared outlet and attached sewer hose.

All sink and shower drains empty into the gray water holding tank. The toilet empties into the waste water holding tank.

Check your monitor panel frequently. The toilet bowl cannot be emptied when the waste water holding tank is full. If the gray water holding tank is overfilled, drain water will back up into the shower floor pan, resulting in unsanitary conditions.

Draining the tanks as described in this section will protect them from freezing during storage. When traveling in sub-freezing temperatures, use a winterizing solution designed for RV use. Follow the directions on the container.

⚠ CAUTION

Failure to monitor holding tank levels could result in unsanitary overflow.

Never drain the tanks at any place other than an approved dumping station. Almost all campgrounds will have a dump station. Online resources and park directories like Woodalls and Rand McNally usually list dumping stations.

NOTICE

Do not use a pipe snake on clogged drains; it could damage internal drain system components.

NOTICE

Never flush hard or solid objects, sanitary napkins, facial tissue, or paper towels down the toilet and into the holding tank. They can get caught in the dump valve mechanism. Colored toilet tissue is slower to dissolve than white. Most motorhome accessory stores offer tissue designed for RVs that will dissolve.

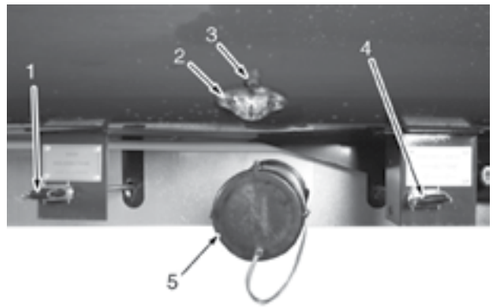

1. Waste Water Tank Dump Valve
2. Light
3. Light Switch
4. Gray Water Tank Dump Valve
5. Drain Cap

Emptying the Holding Tanks

Dump the waste water tank before the gray water tank. Doing so will help rinse the valve outlet and hose with gray tank water. Should solids accumulate, close the dump valve, fill the tank about half full with water, and then tow the trailer for a few miles. The turbulence of the water will usually dissolve the solids into suspension so the tank can be drained. To empty the tank(s):

1. Attach the sewer hose by pressing the bayonet fitting onto the dump valve outlet; rotate clockwise until secure.
2. Attach the outlet end of the hose to the disposal site; position the hose on a slope to ensure it drains completely.
3. Attach a water hose to the waste tank flush inlet on the side of the trailer (do not use the fresh water tank hose for this purpose).
4. Pull the waste tank dump valve handle outward to the stop and wait for the tank to fully drain.
5. Close the dump valve and flush the waste tank; see Waste Tank Flush on page 8-13.
6. Pull the gray tank dump valve handle outward to the stop and wait for the tank to fully drain.
7. Close the dump valve and replace the bayonet ring cap before traveling.

Extended Stays

The system is designed to provide complete self-contained toilet facilities, while on the road or parked, without being connected to a sewage line. It may also be used in the stationary position while connected to a sewage hose. Keep the dump valves closed with either method and empty the tanks when they are nearly full. The idea is to send a large volume of water through the tanks and hose at the same time to float solids away.

After the sewage tank has been emptied, close the dump valves and put approximately five gallons of water in the sewage holding tank using the waste tank flush inlet. This will spray the interior of the tank with water and help prevent solids from building up in the sewage holding tank. The addition of a deodorizing agent like Aqua-Kem® will help prevent odors.

Waste Tank Flush

Your Airstream has a garden hose-style connection to flush the waste water holding tank. Airstream advises flushing the waste tank each time it is emptied to prevent clogging of the water jets and accumulating waste solids inside the tank. Start by emptying the waste tank at an approved dump station and close the dump valve. To flush the tank:

1. Attach a water hose to the flush inlet (do not use the fresh water tank hose for this purpose).
2. Turn the water on and monitor the waste tank level. A spray head with multiple holes will spray the tank's interior surface. Fill the tank about half full and turn the water off.
3. Empty the waste holding tank; see Emptying the Holding Tanks on page 8-12.
4. Close the waste holding tank valve and repeat this process until the water runs clear.

NOTICE

Use the waste tank flush regularly to keep the holes on the spray head from becoming clogged.

Drain System Cleaning

The only cleaning agents that can be used without causing harm to the system are household ammonia and tri-sodium phosphate in small quantities. Do not use any product that contains any portion of petroleum distillates. This type of product will attack the rubber seals of your toilet and dump valve. Also, do not use any dish detergent or abrasive cleaners. All products should be marked as approved for ABS drainage systems.

NOTICE

Do not use a pipe snake on clogged drains; it could damage internal drain system components.

Winterizing and Storage

The main consideration in winterizing your trailer is to guard against freeze damage to the fresh water system, including lines, tank, and pump; the waste drain system, including traps and tanks; the water heater, and the batteries.

When storing your trailer for short or long periods, use the same precautions as you would in your own home in regard to perishables, ventilation, and rain protection. In addition, for prolonged storage periods, flush out all the drain lines and the holding tanks. Also drain the entire water system including the water heater and the water storage tank. Instructions for draining the water system are explained in the following paragraphs on winterizing.

Winterization Procedure

Below are the basic steps to completing the winterization process. It can be time-consuming and challenging to drain all of the water from the system. These tasks require an average mechanical skill level. If you are unsure of your ability to remove all the water from the system successfully, please seek assistance.

The goal is to get all the water out of the system to prevent freeze damage. We recommend allowing the system to drain for several days.

You will need an adapter with an air regulator to connect an air compressor to the city water inlet and access to an air compressor.

NOTICE

Before beginning, review the water heater manual for any manufacturer-specific draining or winterization instructions.

1. Level the trailer from side to side and front to rear. Open all plumbing fixtures (showers and faucets, internal and external).
2. Turn the water pump switch to the ON position to expel water from the storage tank
3. Turn the pump switch OFF after all water has been removed from the storage tank.
4. Open all drain valves; see Drain Valve Locations on page 8-11.
5. While the water is draining from the system, open and flush the toilet-flushing valve. Operate the shower head while holding it down inside the tub and drain all water from the flexible hose.
6. Disconnect outlet hose from water pump. Turn the pump on until all the water is expelled. This water, about 1/2 cup, can be caught in a towel or rag.
7. Reconnect the water pump outlet.
8. Lower the front of the trailer as far as the jack will allow and let the trailer sit until water ceases to drain (no droplets are forming), then crank the jack up as high as it will go until water ceases to drain.
9. Using the adapter mentioned at the beginning, apply, at max, 30PSI air pressure to the city water inlet until only air is coming out of the faucets and drain valves. You may need to open and close faucets and drain valves one at a time and repeat this step several times to force out trapped water.
10. Pour a cup of non-toxic RV antifreeze that has been approved and listed by a recognized testing authority such as Underwriter Lab into the lavatory, sink and tub drains to prevent trap freeze-up.
11. Be sure to open the waste-holding tank dump valves and drain and flush the tanks thoroughly *(this is very important as the sewage in the tanks, if frozen, could seriously damage the tanks)*. Plan ahead and have this done at a dump station.
12. Remove the batteries from your trailer and store in a cool, dry place where there is no danger of freezing. It is very important for optimum life of a battery to check it periodically and to keep it fully charged.

NOTICE

Remove all RV antifreeze spillage from all drain and faucet parts after winterizing. Failure to do so could result in damage to the plumbing fixture's finish.

It is highly recommended to add a non-toxic RV antifreeze (approved for drinking water systems) to the water system using the pre-installed Winterization Kit. Especially if there is any doubt as to whether all the water has been drained.

Before beginning, read the RV antifreeze manufacturer's label for instructions specific to the antifreeze you plan to use. It may take 2-3 gallons to fill the entire system so prepare accordingly. It will be helpful to have another person watching and operating the faucets and showerheads as you follow these steps.

The Winterization Kit is near the water pump; see Water Pump Access Locations on page 8-10. For drain valve locations, see Drain Valve Locations on page 8-11.

1. Reconnect all lines if disconnected in the previous steps.
2. Close all the drain valves.
3. Open the sink and shower drains if they are closed.
1. Open all plumbing fixtures (showers and faucets, internal and external)

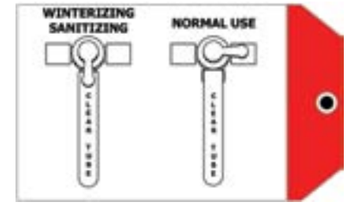

2. Go to the winterization kit and turn the valve handle to the winterizing position as indicated on the tag attached to the kit (shown above).
3. Uncoil the hose attached to the kit, remove the hose cap, and insert the hose down to the bottom of the RV antifreeze container.
4. Turn the pump switch on and run it until antifreeze starts coming out of the faucets. Once antifreeze runs from one tap, turn it off and continue to the next one. Move from one fixture to the next, shutting them off as you go until all the lines are full. As you empty each antifreeze container, turn the pump off, transition to a full container, and turn the pump back on to continue.
5. Allow the antifreeze to flow down drains. Flush the toilet and allow antifreeze to flow down the toilet. If equipped, operate the toilet hand sprayer until antifreeze is coming out. Work the hand shower sprayer while holding it down in the tub until antifreeze is coming out, and if equipped, do the same with the external showerhead. Any remaining antifreeze can be dumped down a drain.
6. Shut the pump off once all the lines are full.
7. Open all the faucets and leave them open.
8. Turn the winterization kit valve back to the normal use position, place the cap back on the hose, and coil it back up for storage.

NOTICE

Remove all RV antifreeze spillage from all drain and faucet parts after winterizing. Failure to do so could damage the plumbing fixture's finish. Do not use water to rinse antifreeze down the drain as it will dilute the antifreeze.

Restoring Service After Winter

1. Re-install the fully charged batteries.
2. Close the dump valve, all water faucets, and fresh water tank drain.
3. Add water to the fresh water tank.
4. Turn on the water pump.
5. Open and close the faucets one at a time until the water runs clear at all faucets signaling RV non-toxic antifreeze is flushed out of lines. Go back and recheck water clarity at all faucets.
6. Turn off the water pump.
7. Hook up to a city water supply, open the faucets again, and recheck water clarity.

Main Door Care

Lubrication

Apply a little paraffin or grease to the striker pockets and a slight amount of household oil to the lock mechanisms to keep the locks operating smoothly. Also, lubricate the hinge pins periodically with household oil. Use the lubricant sparingly and immediately remove any excess from exterior skin.

Adjustment

Main door adjustment can be affected by:

- The trailer being improperly leveled (causing twisting of trailer body/shell).*
- Striker bolt alignment being out of adjustment (striker bolt is adjustable).
- Screen door being out of adjustment, resulting in a situation of the door rubbing the frame, or not closing flush (which will create pressure on the door).
- Main door has come open at some point, introducing a change to the contour of the door frame (check for sheared rivets on interior skin of door).

* When using the stabilizers (for eliminating movement-not leveling) on your Airstream, be sure to check the fit of your main door before and after extending stabilizers. The fit of the main door can be affected if trailer is not level side to side and front to back.

Windows

Sticking Windows

Forcing the window open may cause the window to shatter. Always follow the guidelines below for releasing a stuck window.

1. Unlatch the window latches securing the windows on the interior.
2. Apply 303 Aerospace Protectant to a nylon wedge window tool.
3. Starting in the corner, tuck the end of the nylon tool under the glass and gently slide to opposite end.
4. Once the window is released, wash the seal with a mild soap and water solution, and dry. Clean the window glass thoroughly paying close attention to the edges where the seal meets the window.
5. Using a soft cloth, apply 303 Aerospace Protectant to the window seal. Remove any residue that comes in contact with the exterior aluminum skin.

For more information, see Windows on page 6-2.

⚠ WARNING

Applying force to the window can cause the glass to shatter, which may result in personal injury or damage to your trailer.

Electrical Diagrams

The following electrical diagrams are representative of the National Electric Code (NEC) and Canadian Standards Association (CSA). All circuits are NEC with the exception of CSA circuits as specified in each respective table.

25FB Globetrotter - 12 Volt Main Schematic - 30 Amp

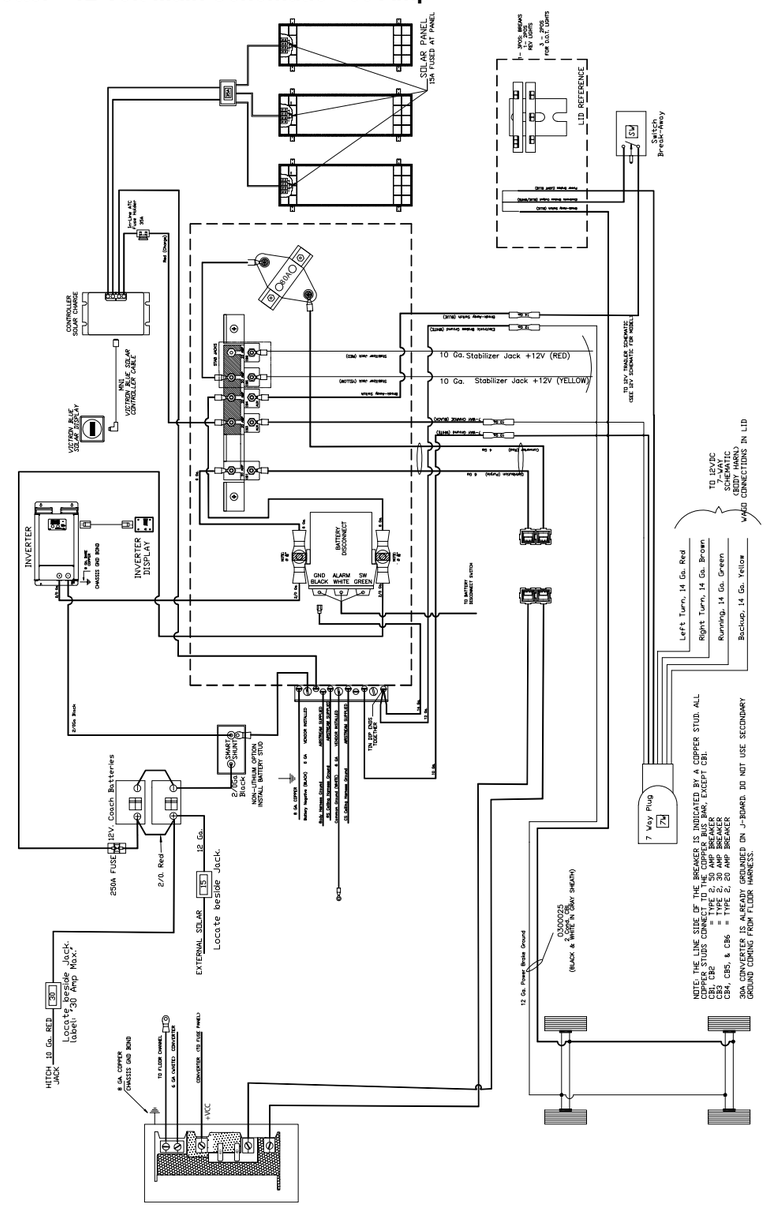

25FB Globetrotter - 12-Volt Main Schematic - 50 Amp

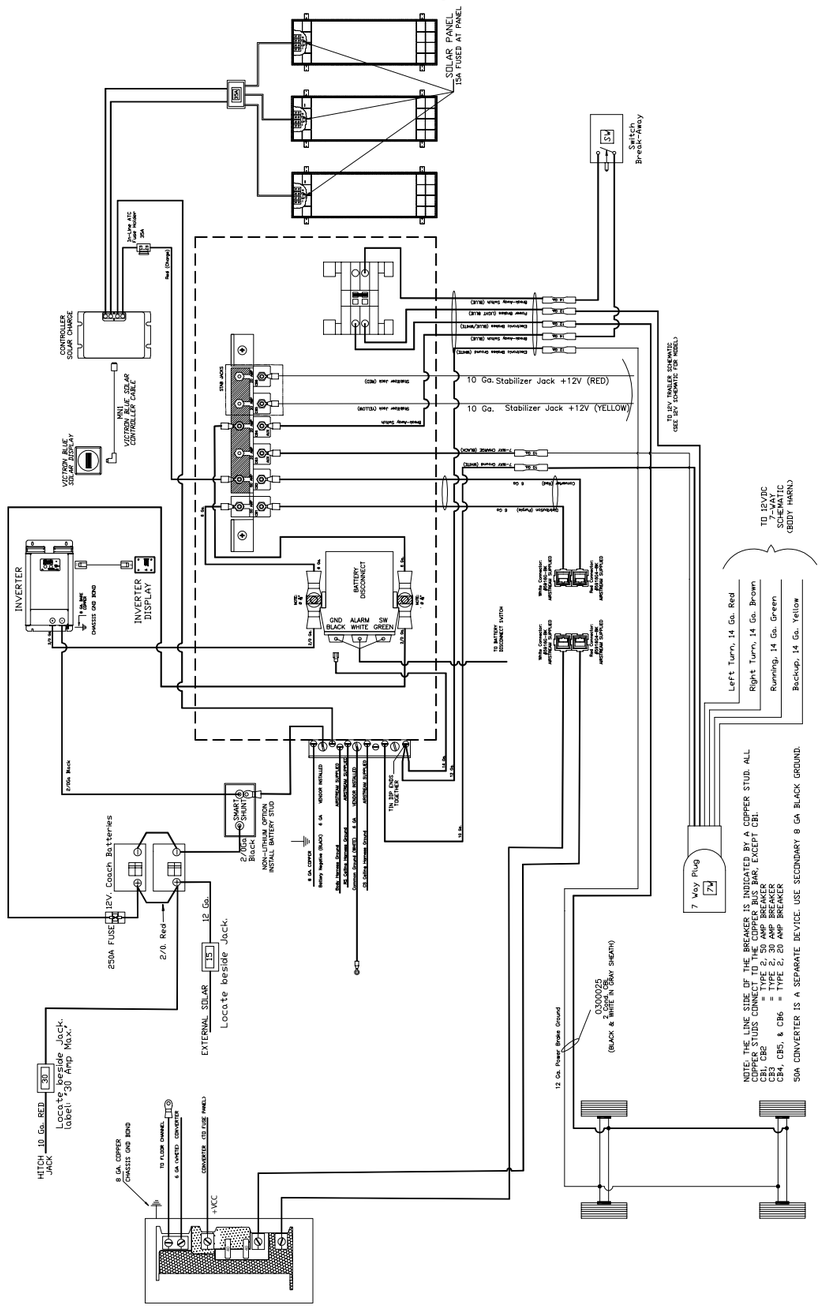

27FB Globetrotter - 12-Volt Main Schematic - 30/50 Amp

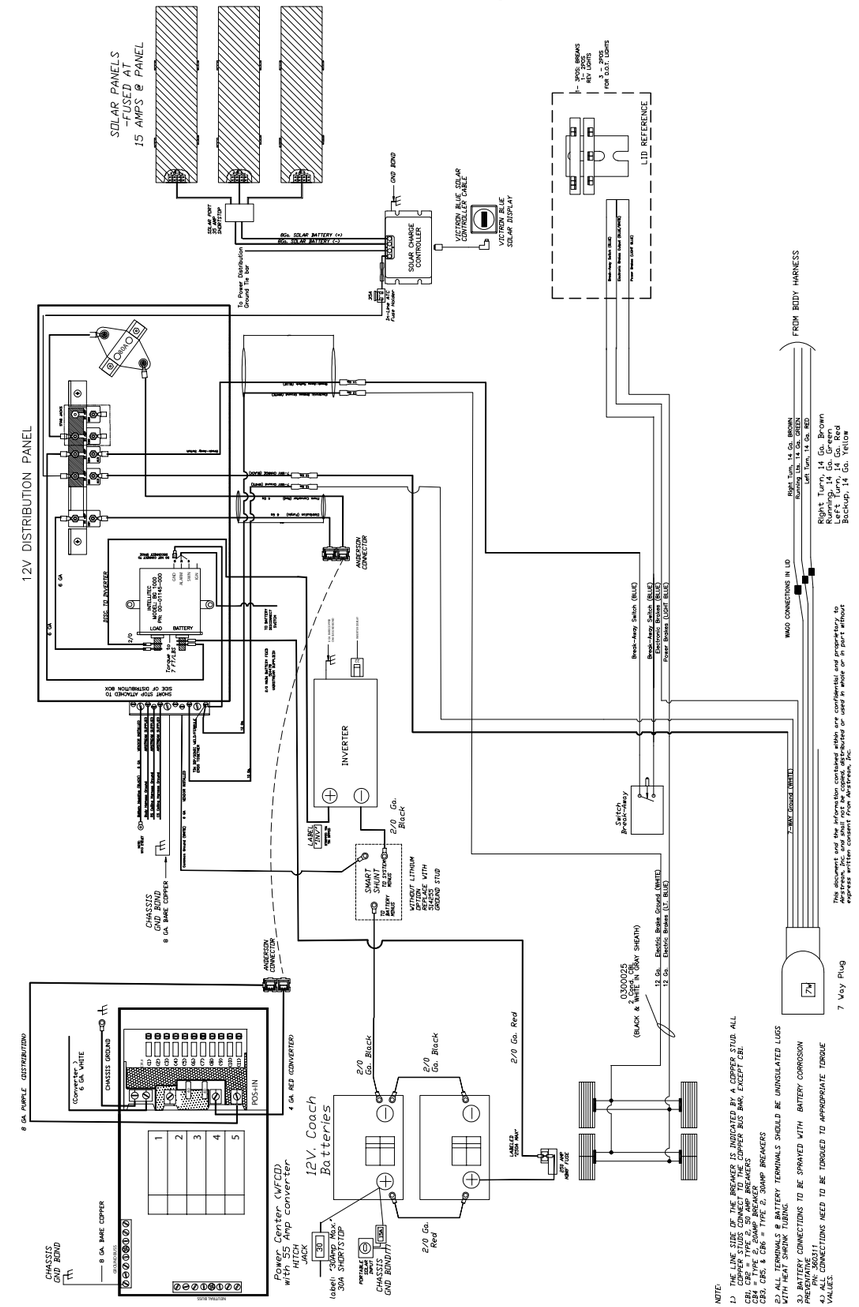

30RB Globetrotter - 12-Volt Main Schematic - 50 Amp

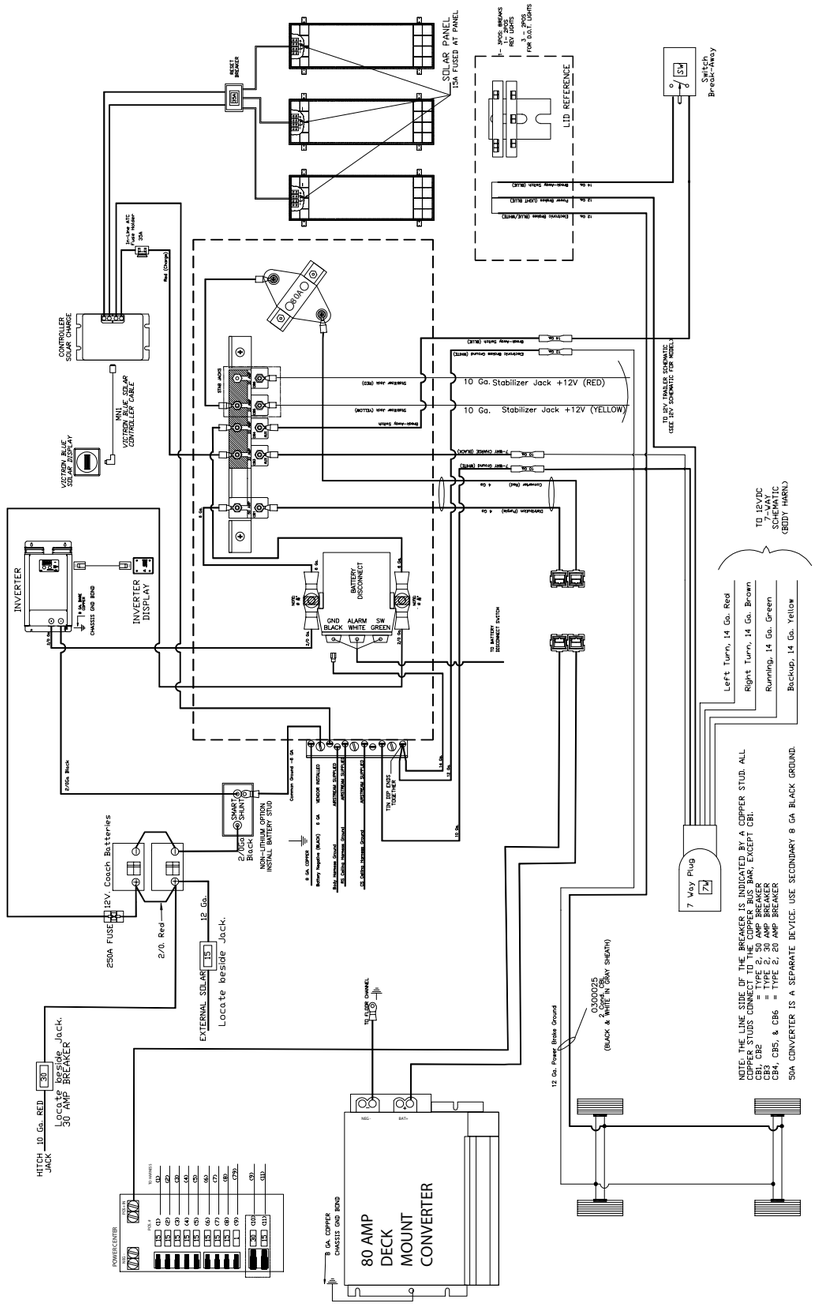

25FB Globetrotter - 120-Volt/30 Amp Diagram

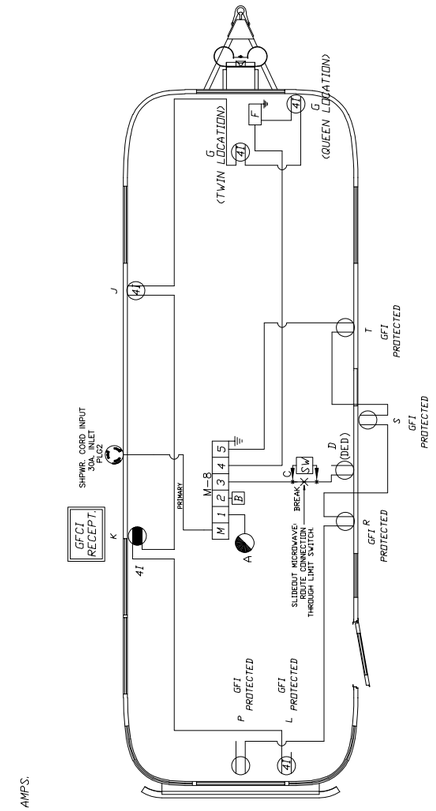

MODEL WF-8955-HC-J-WAGD, CTL PANELBOARD, TYPE 1, MAX MAIN 30 AMPS.
INPUT: 105-130 VAC 60 Hz, 950 WATTS, c (U) us

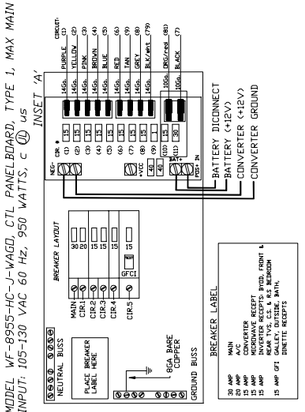

MAIN 30 AMP HACR BREAKER 10-2 ROMEX W/GND

CIRCUIT 1 20 AMP HACR BREAKER 12-2 ROMEX W/GND
A. AIR CONDITIONER (WIRED DIRECT) 16.00 AMPS

CIRCUIT 2 15 AMP HACR BREAKER
B. CONVERTER (WIRED DIRECT) 8.00 AMPS

CIRCUIT 3 15 AMP HACR BREAKER 14-2 ROMEX W/GND
C. 10A LIMIT SWITCH UL - CSA RATED* (SISAX) 9.00 AMPS
D. MICROWAVE RECEPT (SISAX) 12.00 AMPS
TOTAL = 12.00 AMPS

CIRCUIT 4 15 AMP HACR BREAKER 14-2 ROMEX W/GND
F. INVERTER 0.00 AMPS

CIRCUIT 41 2000W INVERTER 12-2 ROMEX W/GND
G. BEDROOM RECEPT 1.50 AMPS
J. BEDROOM TV 1.50 AMPS
K. MAIN LIVING AREA TV RECEPT (GFCI RECEPT) 1.50 AMPS
L. BRING YOUR OWN DEVICE RECEPT 1.50 AMPS
TOTAL = 6.00 AMPS

CIRCUIT 5 15 AMP GFI BREAKER 14-2 ROMEX W/GND
P. DINETTE RECEPT 1.50 AMPS
R. GALLEY RECEPT 1.50 AMPS
S. OUTSIDE RECEPT (DISAW) 1.50 AMPS
T. BATH RECEPT 1.50 AMPS
TOTAL = 6.00 AMPS

NOTE 1:
DC TO AC 2000W INVERTER RATED AT 16.6 AMP INVERTING TRANSFER SWITCH RATED AT 30 AMP
LISTING(S): UL 458 TESTED.
2/0 GAUGE STRANDED PATTERN CABLE RUNS FROM THE BATTERIES(S) THROUGH A 200 AMP IN-LINE FUSE BEFORE ATTACHING TO THE INVERTER.
NEGATIVE CABLE RUNS FROM THE BATTERIES(S) THROUGH A GROUND TERMINAL OR SHUNT BEFORE ATTACHING TO THE INVERTER.

NOTE 2:
NON-CURRENT CARRYING METAL PARTS THAT COULD BECOME ENERGIZED BY 120 VOLTS ARE GROUNDED BY A GROUND PIGTAIL FROM THE BARE COPPER WIRE IN THE ROMEX CABLE TO EITHER A GROUND SCREW OR GROUND OR GROUND CLIP ON THE PART.

NOTE 3:
ALL RECEPTACLES 15A DUPLEX UNLESS OTHERWISE NOTED.
ALL RECEPTACLES BLACK UNLESS OTHERWISE NOTED.

*SLIDEOUT MICROWAVE: 10A. AC LIMIT SWITCH

25FB Globetrotter - 120-Volt/30 Amp Diagram - CSA

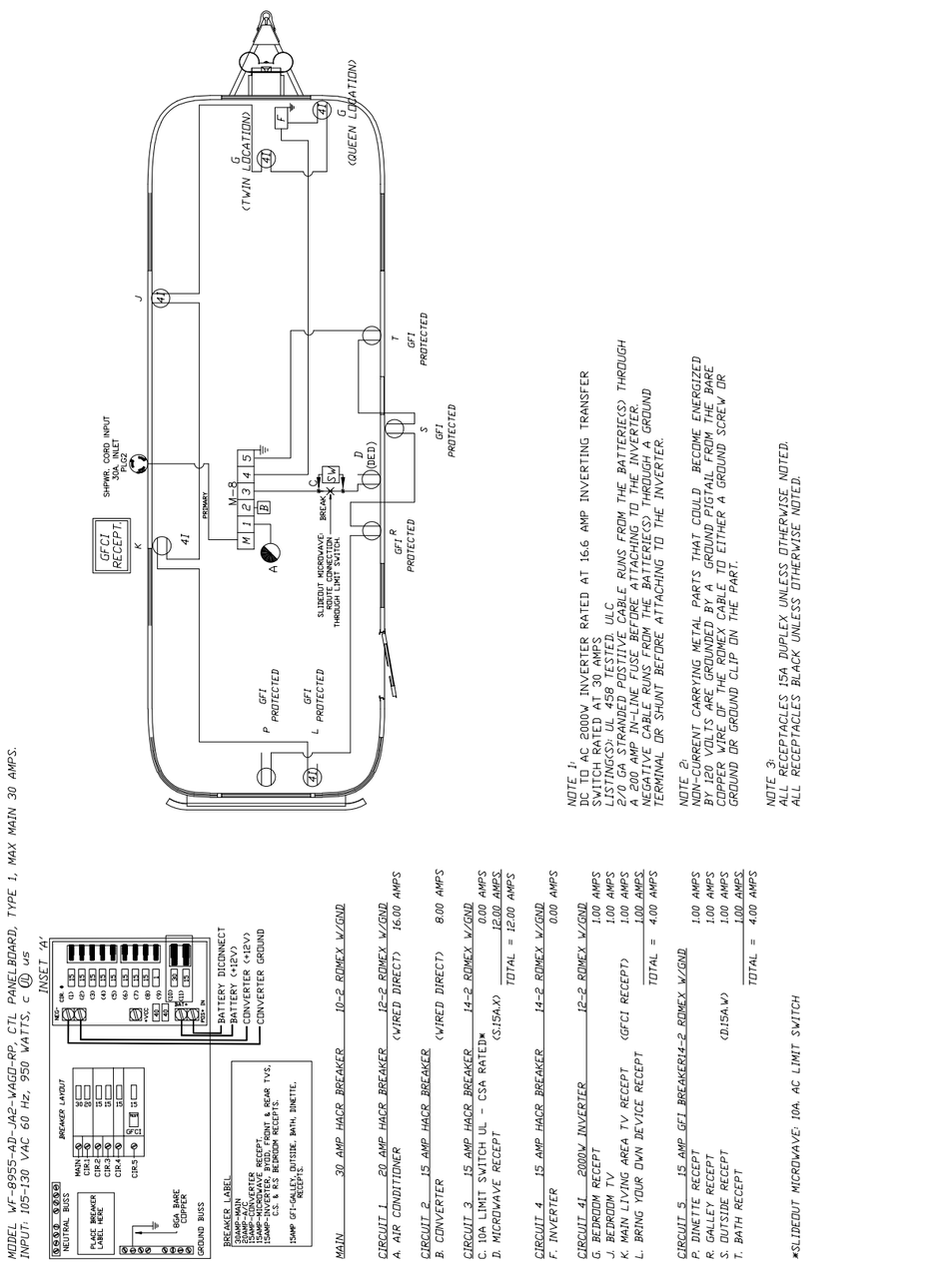

25FB Globetrotter - 120-Volt/50 Amp Diagram

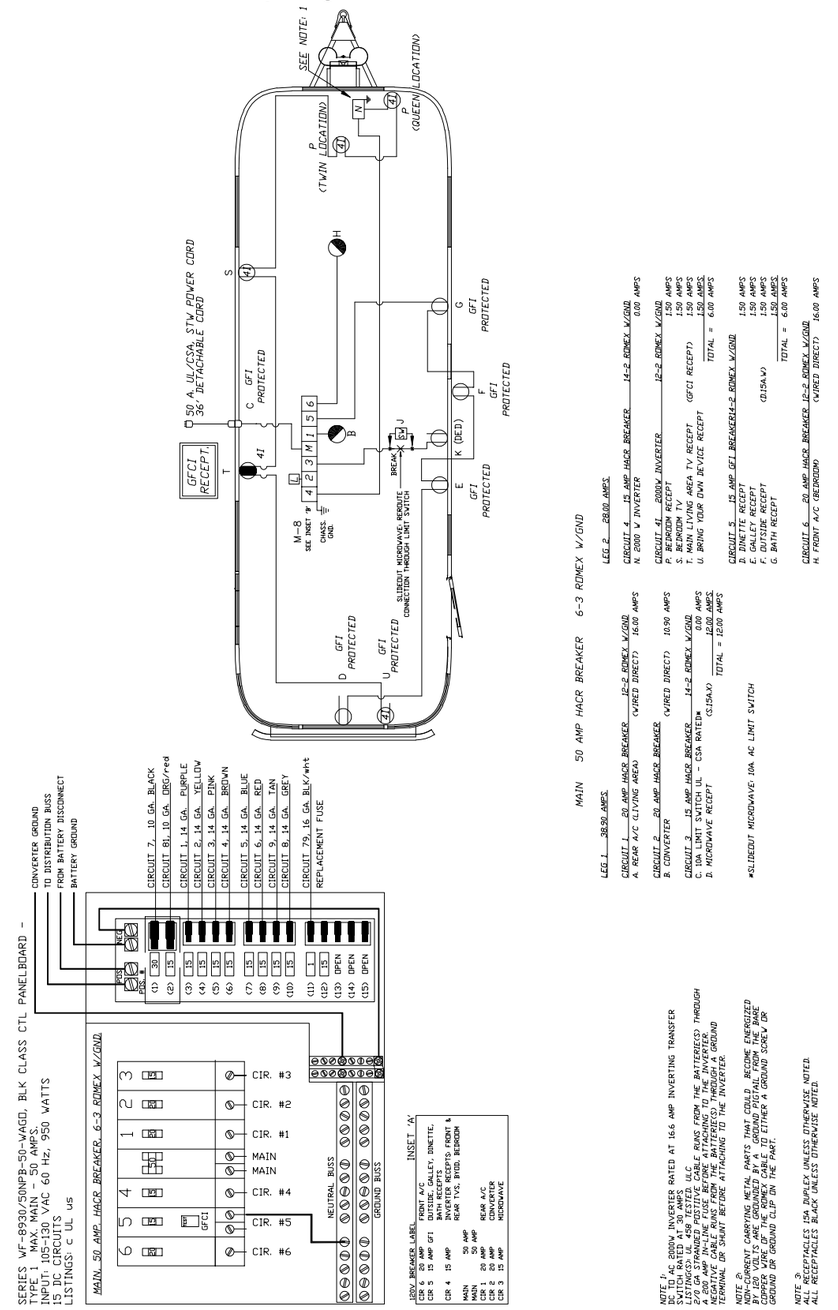

25FB Globetrotter - 120-Volt/50 Amp Diagram - CSA

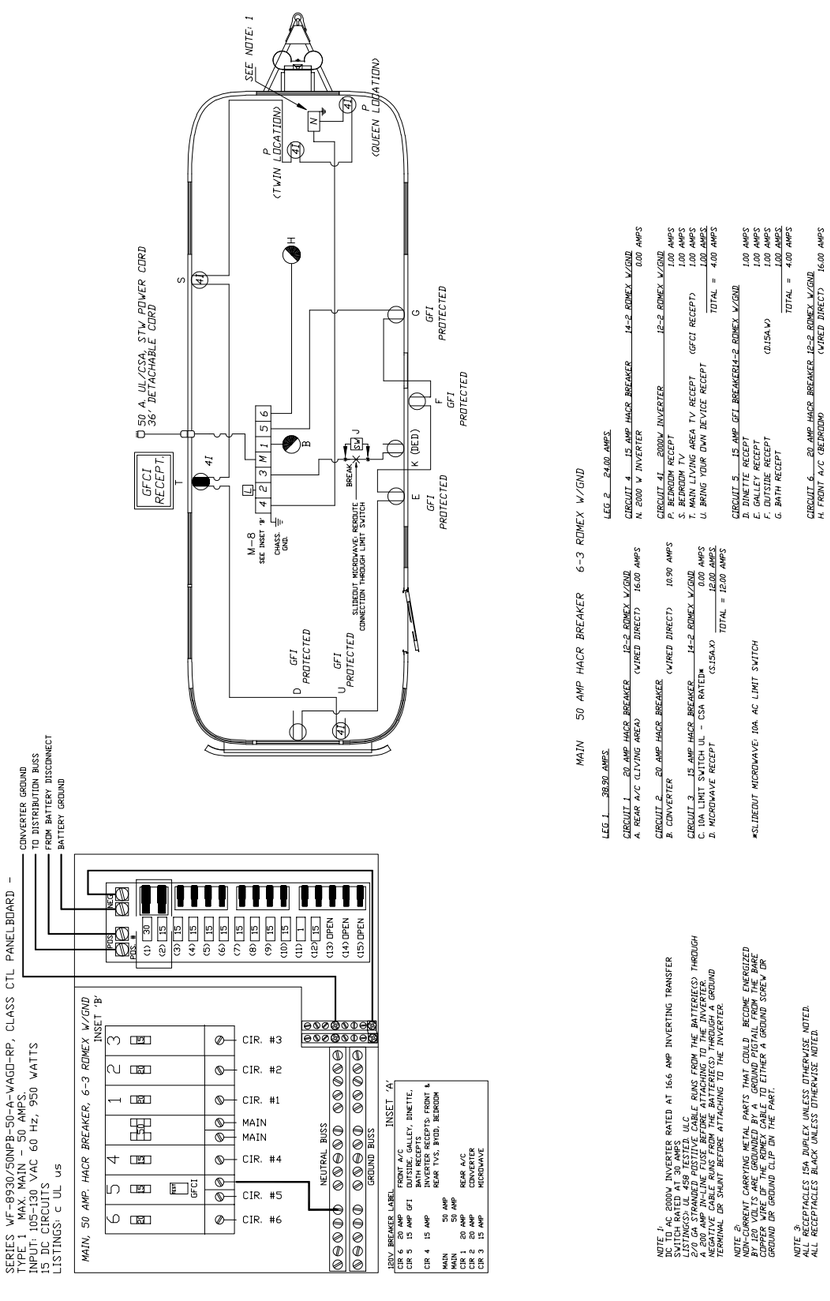

27FB Globetrotter - 120-Volt/30 Amp Diagram

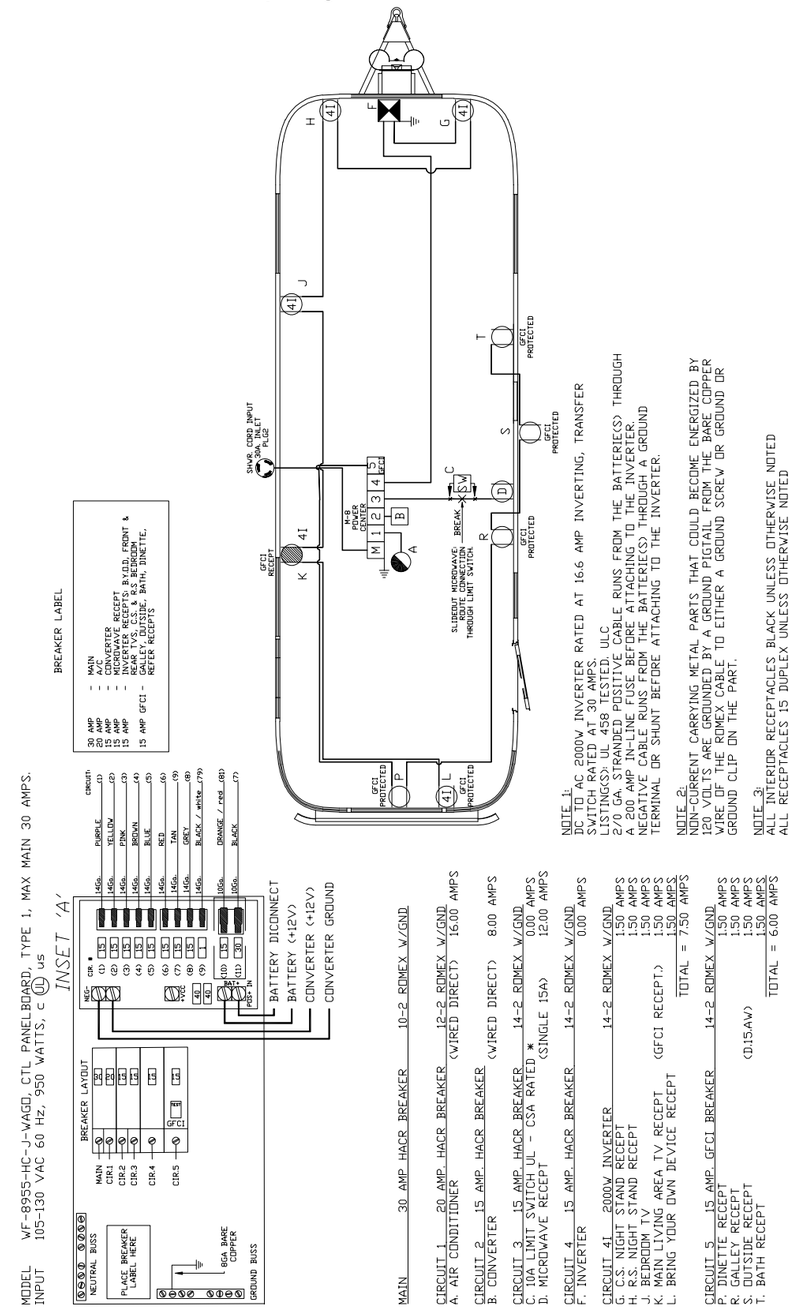

27FB Globetrotter - 120-Volt/30 Amp Diagram - CSA

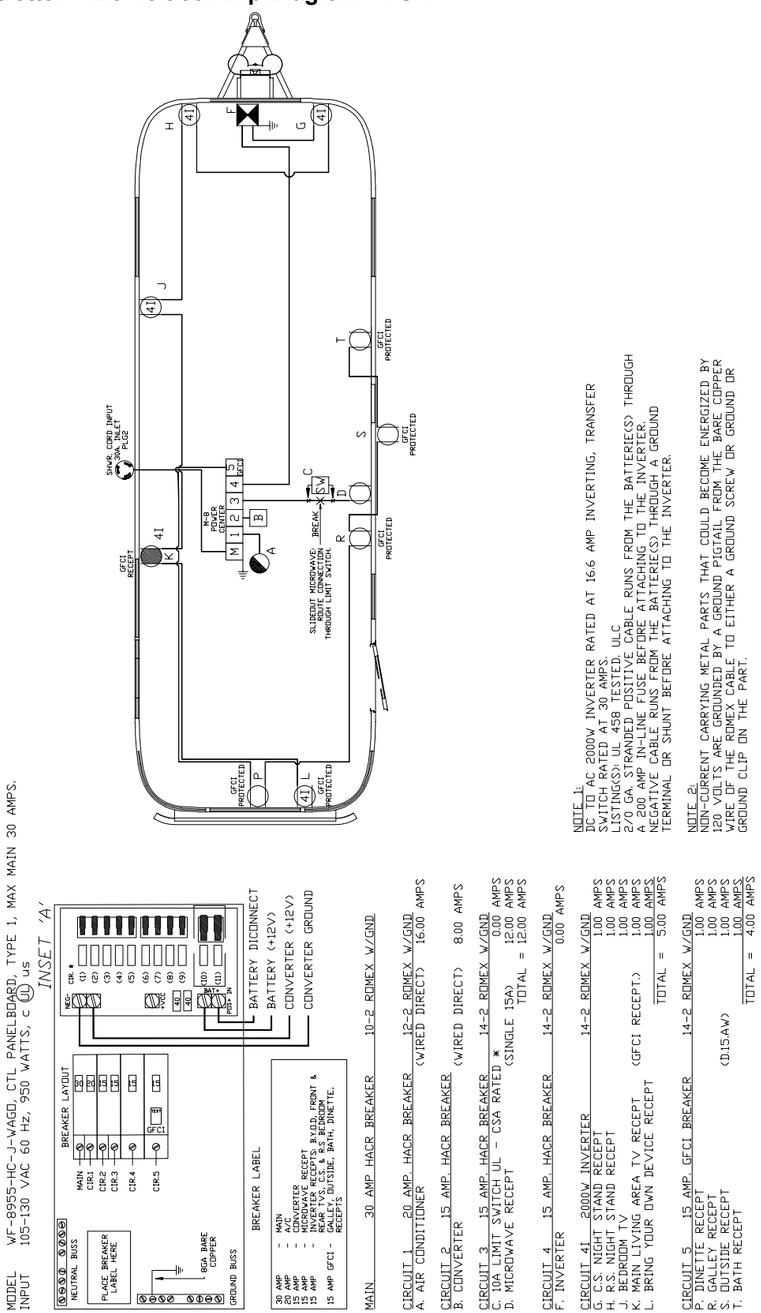

27FB Globetrotter - 120-Volt/50 Amp Diagram

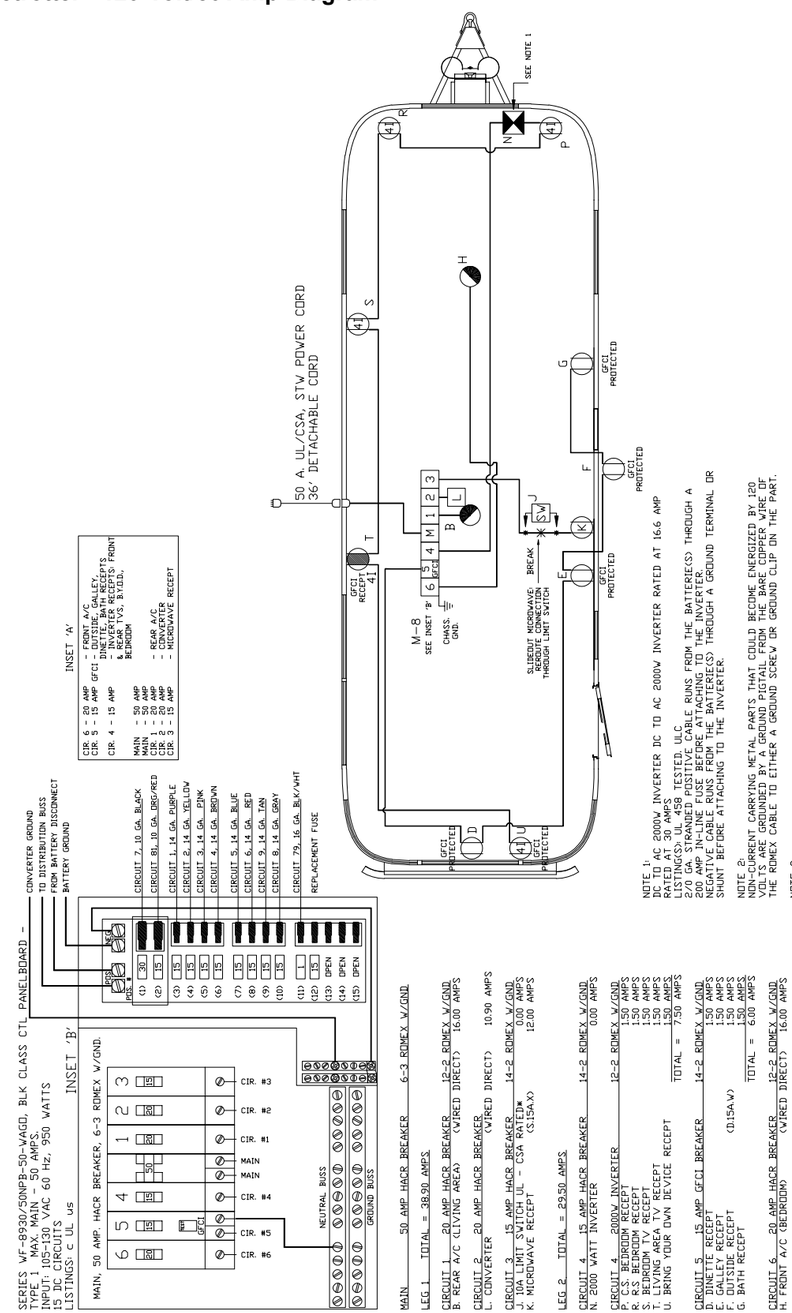

27FB Globetrotter - 120-Volt/50 Amp Diagram - CSA

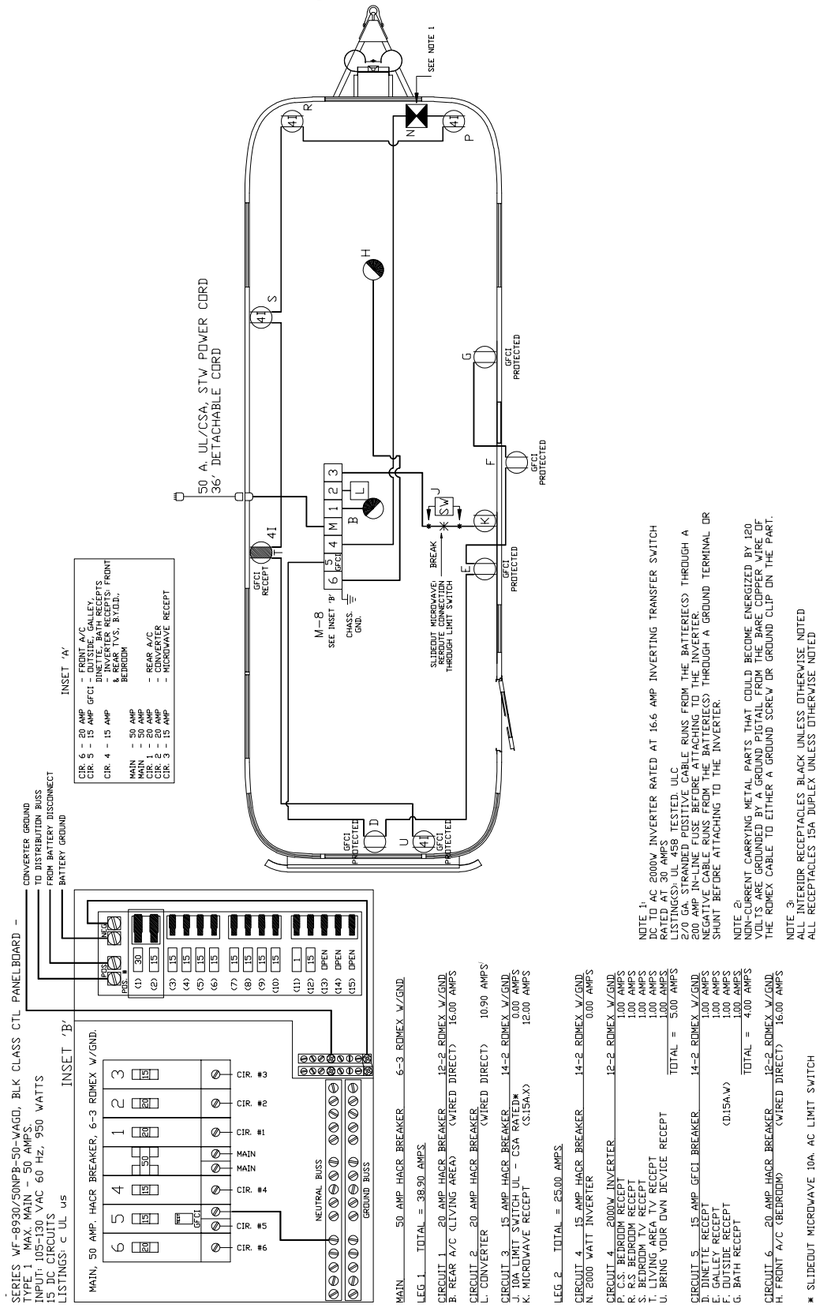

30RB Globetrotter - 120-Volt/50 Amp Diagram

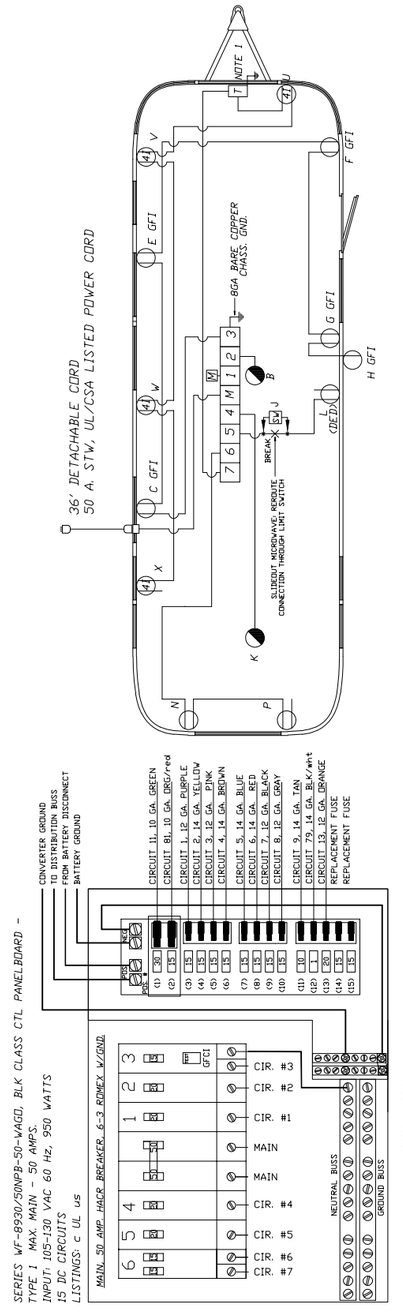

30RB Globetrotter - 120-Volt/50 Amp Diagram - CSA

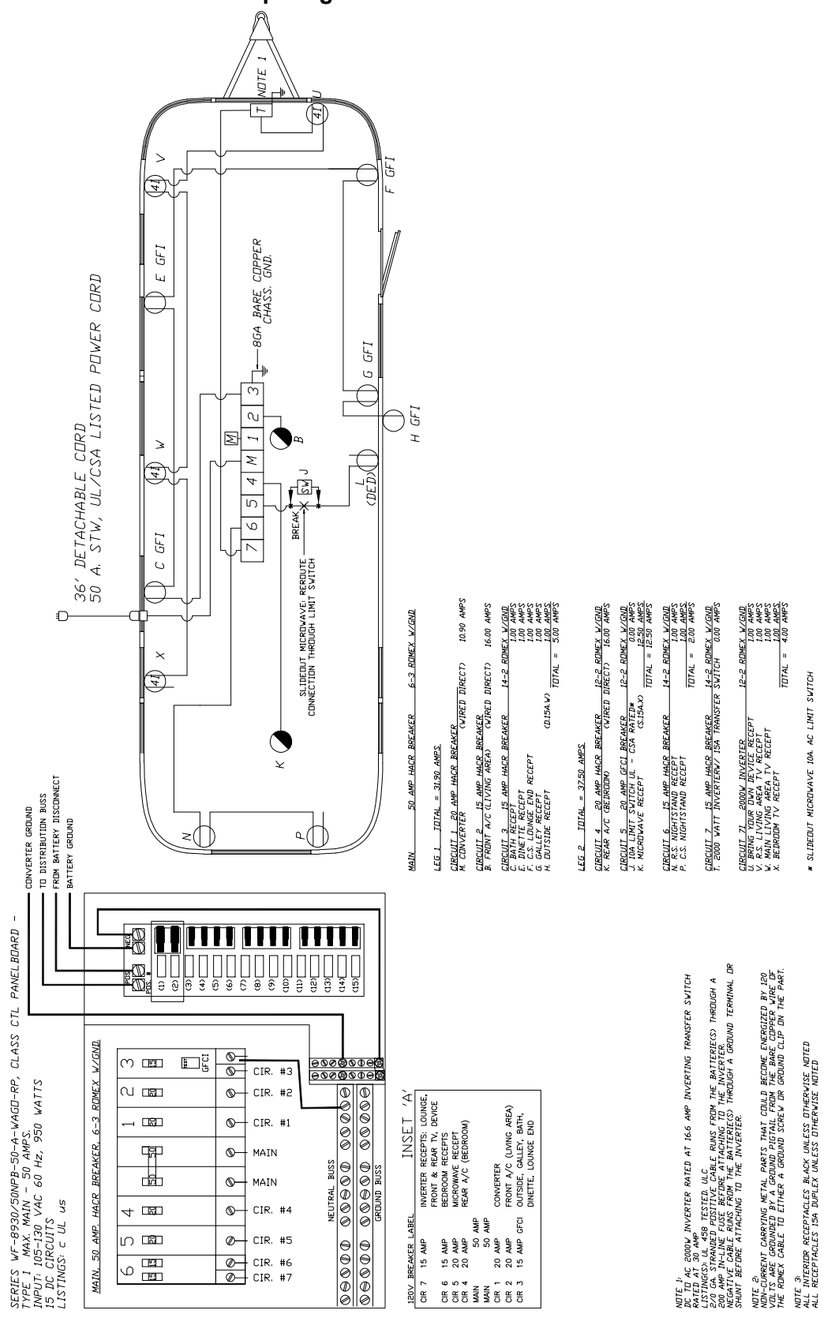

Solar Panel Wiring

For your convenience Airstreams has installed a 3 port easy install box to the roof of the trailer, as well as, a plug for a portable solar panel at the front of the trailer near the battery box. The roof port now allows for easy install of an aftermarket solar panel. Simply plug the power cord from the solar panel into the 3 port box.

A Cat 5-patch cord for a solar panel display, if supplied with the after market unit, runs from the battery buss bar to an area just behind the Seelevel Monitor display. The best way to reach the Cat 5 cable is to remove the Seelevel Monitor. The solar panel display can be mounted in the area near the Seelevel Monitor panel by routing the proper hole size. The Cat 5 wire is then plugged into the solar display panel.

NOTE

The yellow wire must be fused with a 35-amp in-line fuse at the 12-volt positive. All wires are identified with labels at all locations.

The solar panel has a charge controller that should be mounted close to the battery buss bars, as the battery leads and Cat 5 wire are hooked into it to sense the actual battery charge.

The following diagram depicts the way Airstream wires the solar system on factory-installed units and is the recommended wiring for use of the pre-wire system. For model specific drawings, see the individual 12V Main Schematics at the beginning of this section.

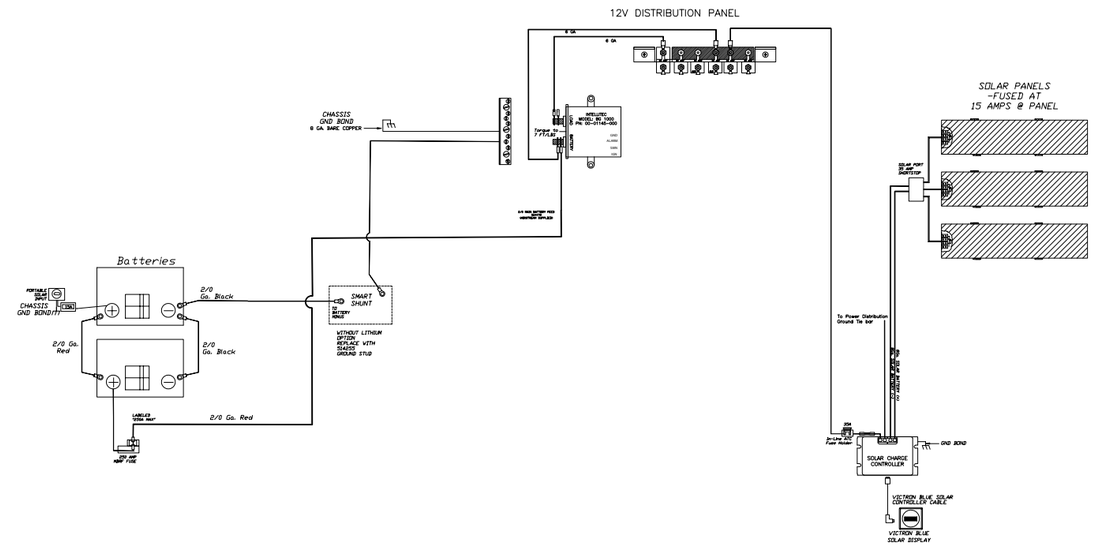

Fresh Water Layouts

25FB Globetrotter

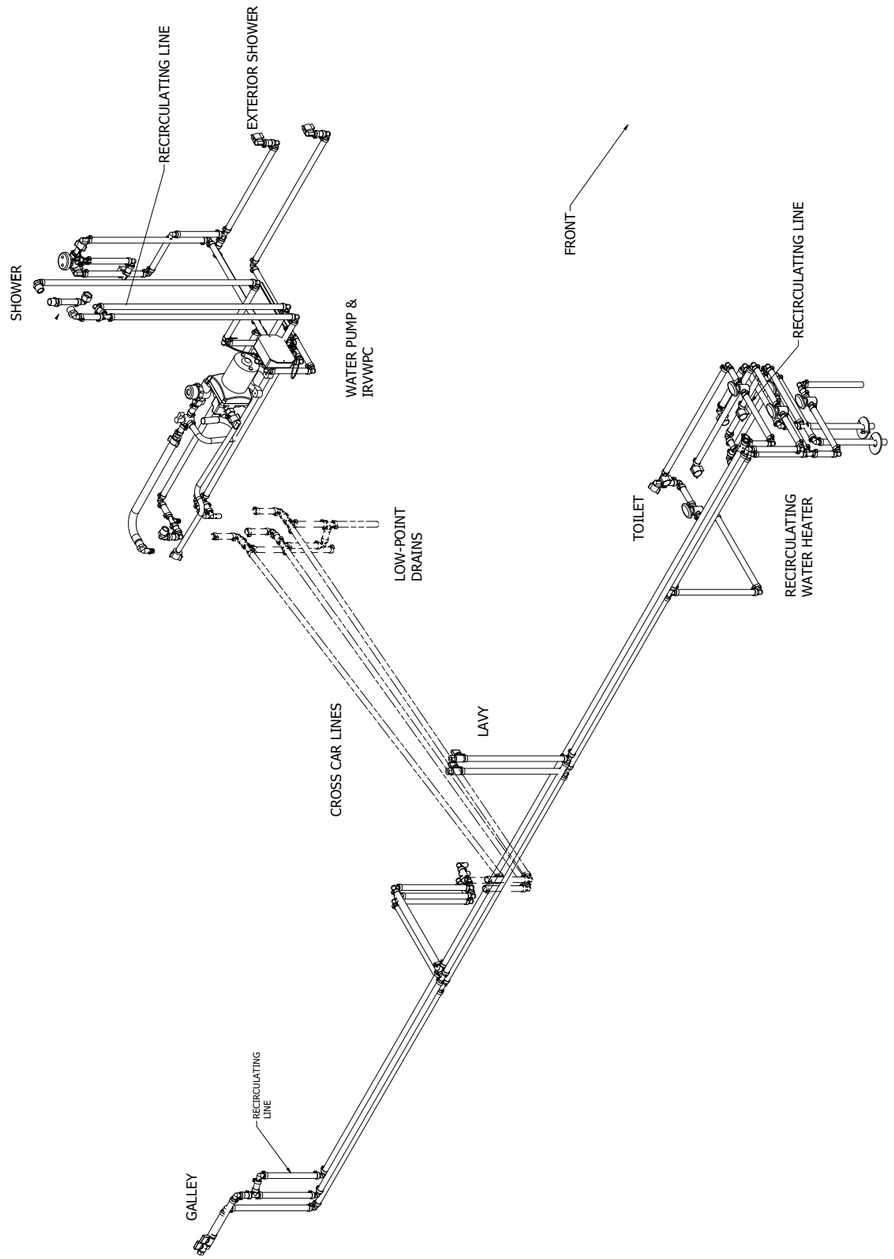

27FB Globetrotter

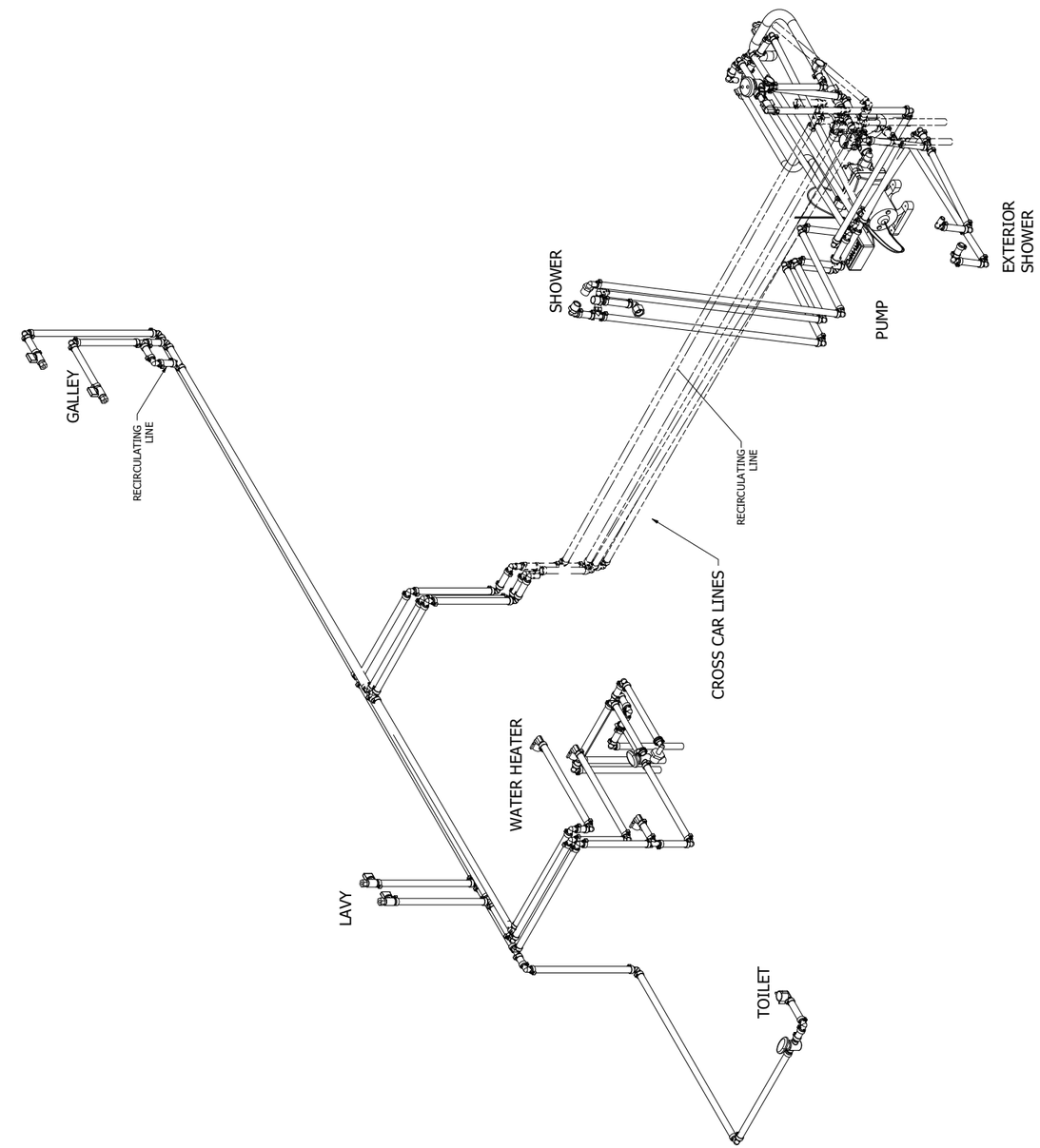

30RB Globetrotter

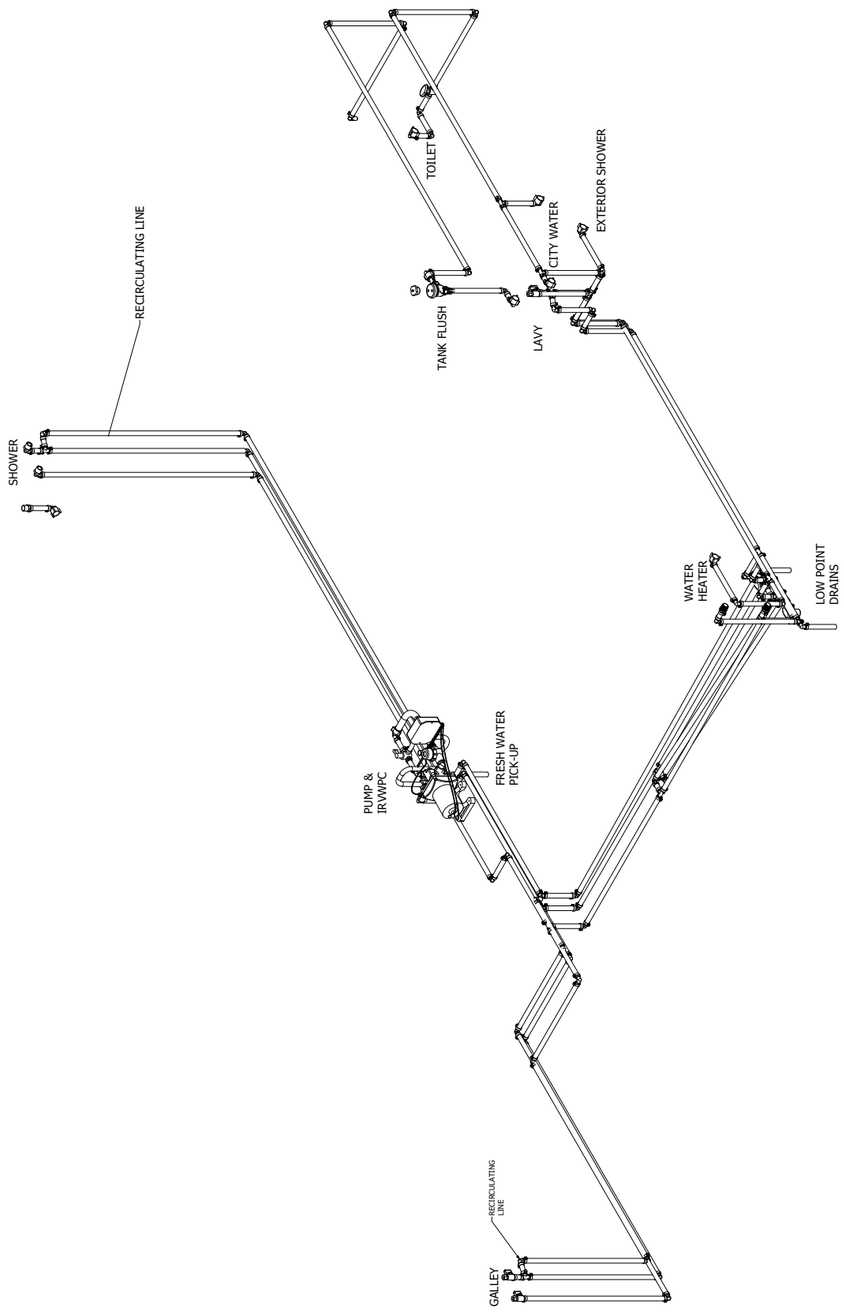

FAQs and Answers

Electrical

1. What size generator is needed to operate my Airstream?

Answer: A 1,000-watt generator may be used to charge just the batteries. However, if you want to run appliances such as microwave or AC units, it is recommended to have at least 4,000 watts or more* (This is for a 30 amp system).

* Many Airstreamers accomplish this using two portable generators running in parallel.

2. What can I plug into the 2000-watt inverter outlets in my Airstream?

Answer: These plugs are designed for no more than 2000 watts of power and are intended for charging things such as laptops and phones, and TV usage. Plugging in items such as vacuums, hairdryers, etc., may harm the system; see Inverter on page 5-14.

3. I was told my Airstream is pre-wired for solar panels. What does this mean?

Answer: Wiring has been installed throughout your trailer for the solar package Airstream is currently using. For more information on solar packages, you may wish to contact your Airstream dealer. Also, see Solar Power Charging on page 5-18.

4. What type of batteries are in my Airstream?

Answer: For information about the different types of batteries, see Batteries on page 5-15 and refer to the battery manufacturer's information for details specific to the type of battery you chose for your Airstream.

5. Do you recommend using a surge protector when plugged into shore power?

Answer: Your Airstream is breaker protected. However, with the use of more personal electronic devices and the number of RV users in parks, added protection is always a plus.

6. What is the battery disconnect switch function?

Answer: It is a switch that disengages or engages the 12-volt power supply from the house batteries to everything but the LPG detector. The switch is used to cut power when the trailer is not being used or put into storage to preserve battery charge; see Battery Power Disconnect Switch on page 5-14.

7. What can I do if the power jack will not function?

Answer: The jack may be raised and lowered using the hand crank provided. Check for 12V power and proper grounding at the jack. For more information, see Power Jack on page 6-9 and see Power Jack on page 8-9.

8. What does the power converter do in my trailer?

Answer: The converter takes 120-volt AC shore power and turns it into 12-volt DC to keep batteries charged and power 12-volt items in your trailer; see Converter / Charger Function on page 5-11.

Plumbing

1. Is it recommended to leave the dump valves open when connected to a sewer hookup?

Answer: No. This would cause a buildup inside the tank; see Extended Stays on page 8-13.

2. How does the waste tank flush work?

Answer: For information on how to use the tank flush, see Waste Tank Flush on page 8-13.

3. Do I need a water regulator?

Answer: No, your Airstream is equipped with a built in regulator rated for 50 psi.

4. How do I get fresh water into my trailer?

Answer: You can use the on board fresh water tank and 12-volt pump for your water supply when boon docking, or hook to an external water source via garden hose to exterior water inlet when parked at a campground; see Gravity Water Fill on page 6-6 and see City Water Hookup on page 6-6.

5. What is the difference between the gray water tank and the waste water tank?

Answer: The gray water tank holds water from the shower and sink drains. The waste water tank holds sewer water from the toilet.

Audio-Video

1. My TV reception is poor. What can I check?

Answer: Verify your antenna booster is set to proper selection (On- for antenna and Off- for cable satellite). You should also make sure connections are tight on your TV; see TV/Radio Antenna on page 5-19.

Appliances

1. I am planning for a trip in my Airstream. How should I get the refrigerator cooled down?

Answer: Cooling time will vary with exterior temperatures and time of day. Start by pre-cooling your refrigerator at least 12 hours prior to loading your refrigerator. Always pre-cool food in your refrigerator or freezer to reduce cooling time. Don't pack food too tightly in compartment as to prevent circulation around food items. Normal refrigerator operating temperatures are 34ºF to 40ºF.

2. The heat pump in my trailer doesn't seem to be providing any heat; yesterday it worked great.

Answer: The heat pump is an effective heat source, as long as outdoor temperatures are above 45°F. Below 45°F, there is not enough heat outside for the system to absorb, and efficiency drops. The manufacturer recommends that, if you know your outdoor temperatures are going to be below 45°F, utilized the LP gas furnace until conditions are more ideal for the heat pump.

3. My air conditioner freezes up. What is the problem?

Answer: In high humidity conditions, the AC manufacturer recommends you operate your AC (manual mode) on the high fan setting and all vents should be open to have maximum air flow over the coils; this helps reduce icing. Also, dirty air conditioner filters can restrict air flow and cause the AC to ice up.

Maintenance

1. Where can I find my trailer serial number?

Answer: A label is attached on the roadside sheet at the front side sheet seam. This label will also provide the inflation pressure of the tires and GVWR. The serial number of the trailer is also stamped on the street side of the A frame by the LPG tanks.

2. Awning suggestions:

Your Zip Dee awning is intended to provide shade. Your awning can be used in light rain conditions if front or rear is tilted to let water run off. Light winds should not affect awning use. If you are leaving your trailer for long periods or in threatening weather, the awning should be retracted. Visit https://support.airstream.com to view User Guide Videos on this subject.

3. Cleaning the exterior of my Airstream. Suggestions:

Airstream recommends washing the trailer using a mild auto detergent safe for clearcoated surfaces. Airstream recommends washing based on operating conditions and waxing a minimum of twice a year. Walbernize Superseal is a product that was designed specifically for Airstream and provides good wax protection; see Exterior Features and Care on page 6-2.

4. Can I use a nylon cover for my Airstream?

Answer: Airstream does not recommend using any type of cover. The installation and movement of the cover in windy conditions could scratch the clearcoat.

5. What type of attachments can I install on the rear of my Airstream?

Answer: Airstream only recommends the installation of a Fiamma bike rack (Airstream part number 209397) on the rear of trailers. No other carriers are recommended.

6. My main door is hard to open, is this normal?

Answer: Your main door is designed differently than a flat surface door. The door is over-bent in order to apply more pressure at the top and bottom of door for better sealing. Also, on uneven surfaces, the trailer can be in a slight twist that could affect closing. Make sure trailer is as level as possible. For more information, see Main Door Care on page 8-16

7. How do I clean my drapes and upholstery?

Answer: Drapes may be dry-cleaned. Upholstery may be spot-cleaned. We recommend dry cleaning as the best overall cleaning solution. For interior cleaning instructions, see Interior Features and Care on page 5-3.

8. What is a rubber torsion axle?

Answer: Your trailer has Dexter rubber torsion axles. This type axle has internal rubber cords that provide load carrying capacity verses leaf spring type axles. Reminder - never jack up trailer using rubber torsion axle tubes; see Axle and Running Gear Assembly on page 6-8.

9. My windows are sticking and don't open easily; what is wrong?

Answer: Your windows have seals around the edges which in extreme heat and dusty conditions can become sticky. For more information, see Windows on page 6-2 and see Sticking Windows on page 8-16.

10. The mattress in my Airstream is an odd shape, where can I buy sheets?

Answer: Airstream has a selection of sheets for your Airstream and can be purchased by calling (937) 596-6111 extension 7400 or 7418. You can also access our store website at https://www.airstreamsupplycompany.com.

NOTES

Index

A

Air Conditioner 5-20
Airstream Academy ii
Airstream Supply Company 5-3, 5-6
Alarms 2-3
Aluminum Wheels 6-2
Appliances 5-20
Awning 6-5
Axle 6-8
Axles 8-8

B

Backup Camera 6-4, 7-5
Batteries 5-11
  Battery Charging 5-17
Battery 5-9, 5-15
Battery Disconnect Switch 5-14
Battery Management System (BMS) 5-15
Bed 5-6
Bed Conversion 5-6
Brakes 7-2, 8-9
  Electronic Brake Controller 7-2
  Proper Electric Brake Use 7-2
Breakaway Switch 7-3, 8-9

C

Camber 8-8
Cameras 6-4
Camping 3-6
  Effects Of Prolonged Occupancy 3-8
  Overnight Stop 3-7
  Pre-Travel Check List 3-6
Carbon Monoxide 2-5
  Detector 2-4
  Important Safety Precautions 2-5
  Symptoms of Carbon Monoxide Poisoning 2-6
Ceiling Vent Fan 5-22
Charger 5-11
Charging 5-17
Chemical Sensitivity 2-2
Circuit Breaker Protection 5-12
Circuit Breakers
  Breaker Test 5-13
City Water Hookup 6-6
Cleaning 5-3
  Exterior 6-2
  Interior 5-3
Clothesline 5-5
Coach-Net 3-5
Converter 5-11
Cooktop 5-25

D

Detectors 2-3
Dinette Table and Bed Conversion 5-6
Door
  Lubrication and Adjustment 8-16
  Main Door 6-3
  Screen Door 6-3
Doormat and Rug Selection 5-4
Drain and Waste System 5-8, 8-12
Drain System Cleaning 8-13
Drain Valves 8-10

E

Electrical 5-10
  7-Way Plug 7-5
Electrical Diagrams 8-17
Emergency Escape Windows 6-2
Ethernet 5-19
Exhaust Fan 5-22
Exhaust Vent 5-23
Exterior Care 6-2

F

Fabric Care 5-5
Fan 5-22
FAQs and Answers 8-35
Faucet Care 5-4
Fire Extinguisher 2-7
Flooring 5-4
Floor Plans 4-2
Formaldehyde 2-3
Freeze Damage Protection 3-10
Fresh Water Layouts 8-32
Fresh Water Tank Draining 8-10
Front End Protection 6-4
Furnace 5-21
Furniture and Upholstery 5-5

G

Gas Regulator 6-10
GFCI 5-13
Gravity Water Fill 6-6

H

Hardwood Care 5-5
HDMI/Ethernet wall port 5-19
Hitch
  7-Way Plug 7-5
  Hitching Up 7-5
  Measuring Hitch Ball Height 4-4
Hitch/Coupler 6-8
Hitching Up 7-5
Holding Tanks 8-12

I

Interior 5-3
Inverter 5-10, 5-14

J

Jack 3-8
  Power Jack 6-9, 8-9
  Stabilizing Jacks 3-8
  Tire Changing 8-3
Jack Locations 3-8, 8-3

L

Leveling 3-8
Lighting 5-3
Liquid Petroleum Gas 6-10
  Detector 2-4
  Detector Test 2-4
  Low Voltage 2-4
Load Distribution
  Equalizing 7-5
Loading 7-3
LPG 2-4, 3-10, 6-10, 6-11, 6-12, 8-35, 8-36
  Basic Rules For LPG Safety 2-6
  Detector 2-4
  Fill Valve 6-10
  Port 6-12
  Safety 2-6, 6-12
  Tanks 6-11
LPG Port 6-12
Lug Nut Torquing 2-2, 8-7
Lug-Pattern Sequence 8-7

M

Main Door 8-2
  Lubrication and Adjustment 8-16
Maintenance Schedules 8-2
Microwave 5-25
Mold 2-2, 3-9
Monitor 6-4
Monitor Panel 5-9

Index

O

Outlets
  120-Volt Outlet 6-7
Outlets/Receptacles 5-10
Overnight Stop 3-7
Over-the-Door Camera 6-4

P

Parts 8-3
Plumbing 5-7
Power Center 5-12
Power Head
  Maintenance 8-9
Power Inlet and Cordset 6-7
Power Jack 6-9, 8-9

R

Receptacles 5-10
Refrigerator 5-25
Restoring Service After Winter 8-15
Roadside Assistance 3-5
Rug Selection 5-4

S

Safety 2-2, 2-7
  Controlling Sway, Fishtailing 7-8
Sanitizing 8-11
Satellite Connection 5-19
Screen Door 6-3
Service 3-5, 8-3
Shell Protection 6-4
Shoreline Connection 5-17
Shore Power 5-10
Shower, Exterior 6-6
Shower, Interior 5-5
Sink and Faucet Care 5-4
SmartPlug 5-17
SmartShunt 5-17
Smoke Alarm 2-3
Solar Panel Wiring 8-31
Sound System 5-19
Spare Tire Carrier 8-7
Specifications 4-3
Stabilizing Jack 3-8
Step 6-3
Stereo 5-19
Stone Guards 6-4
Sway Control Device 7-8

T

Table and Bed Conversion 5-6
Tank Flush 8-13
Tank Heaters 3-10
Tank Levels 5-9
Tanks
  Drain System Cleaning 8-13
  Emptying the Holding Tanks 8-12
  Fresh Water Tanks and Draining 8-10
Thermostat 5-21
Tires 8-3
  Tire Changing 8-3
Toe-In 8-8
Toilet 5-9
Towing 2-2
  7-Way Plug 7-5
  Backing Up 7-7
  General Information 7-6
Tow Vehicle 7-2
Tow Vehicle to Trailer Charging 5-17
Trailer
  Weight 7-4
TV and Audio Component Pairing 5-19
TV and Sound System 5-19
TV/Radio Antenna 5-19

U

Upholstery 5-5
Upholstery Care 5-5
User Guide Videos ii

V

Vent 5-22, 5-23
  Ceiling Vent Fan 5-22
  Exhaust Vent 5-23
Ventilation 2-2, 2-3
Vinyl Floor 5-4

W

Waste Tank Flush 8-13
Water Fill 6-6
Water Heater 5-24
Water Pump 5-7
  Access Locations 8-10
  Strainer Cleaning 8-10
Water Service 6-6
Water System 5-7
Weighing Your Trailer 7-4
Weight Distribution 2-2
Wheel Bearing Maintenance 8-7
Windows 6-2
Window Stone Guards 6-4
Winterizing and Storage 8-14
Winter Traveling 3-10
Wireless Observation System 6-4

AIRSTREAM®
Resource Guide

Welcome to Airstream

We have developed a Welcome Book to help get you up to speed quickly and learn the ins and outs of Airstream life. Inside this guide you will find all the resources below and much more.

- A Timeline of Airstream History
- A Guide to Getting Started
- Benefits and Support
- Meet Your People
- Plan a Trip
- Document your Journey

Get Your Welcome Book

Travel Trailer **Touring Coach**

Airstream Resources

Owner's Hub **Owner's Manuals** **Name Your Airstream** AIRSTREAM SUPPLY COMPANY

Welcome to the Family

Airstream Club International

www.airstreamclub.org

Engage with the longest-rolling, single branded RV club in the world. Your first year *"Explorer Membership" is paid for by Airstream.*

Visit the Mothership

www.airstream.com/heritage-center

Make plans to visit Airstream in Jackson Center, Ohio to take a factory tour and visit the Heritage Center to experience the history of our iconic brand.

My Airstream

Model Information

Model Year _____

Purchase Date _____

Model Name _____

VIN Number

Airstream Serial Number

Airstream Dealer

Name: _____

Contact: _____

Phone: _____

Email: _____

Website: _____

AIRSTREAM®

1001 West Pike Street
P.O. Box 629
Jackson Center, OH. 45334-0629
Phone: (937) 596-6111 Fax: (937) 596-7939
www.airstream.com